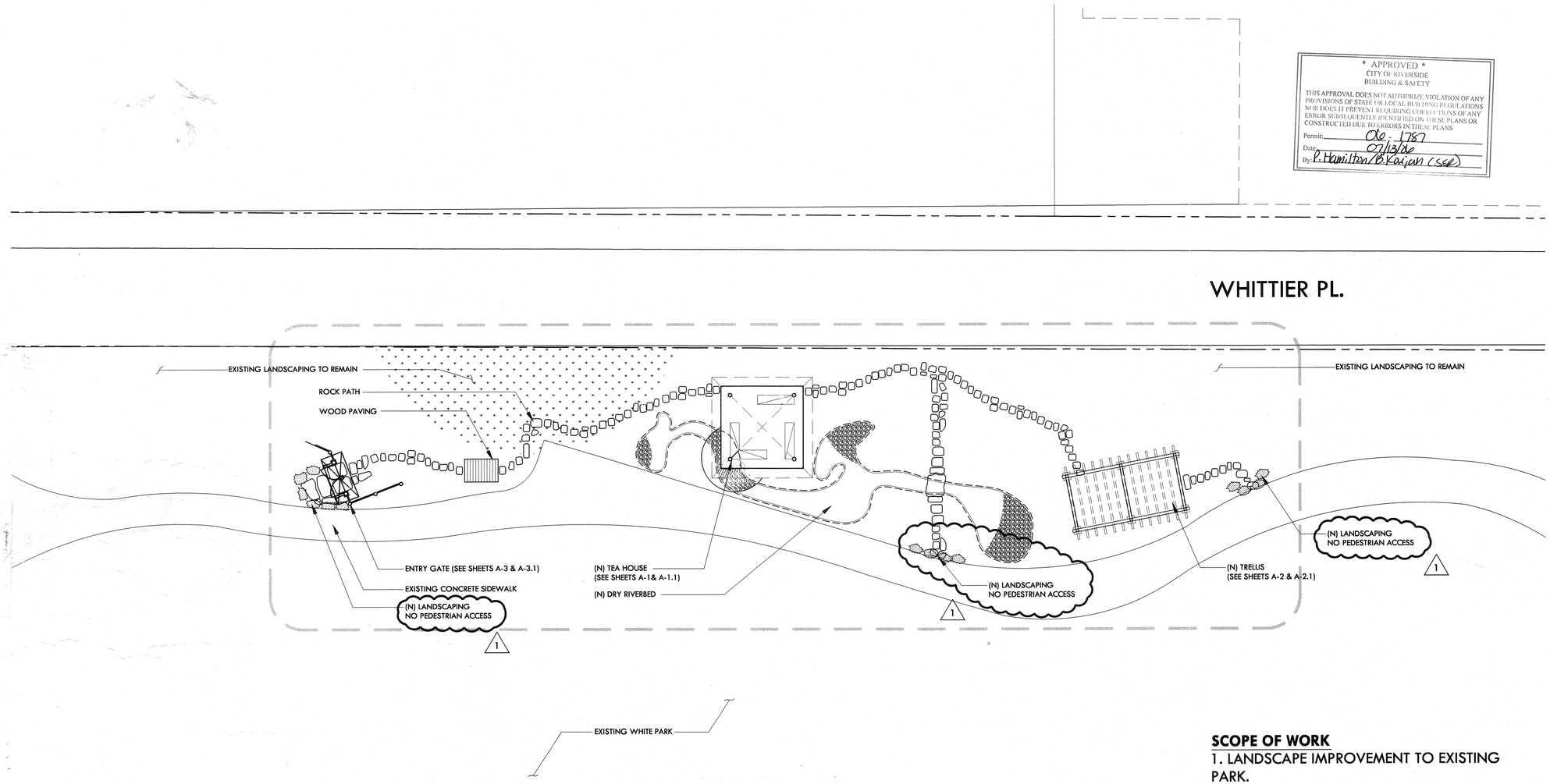

* APPROVED *
CITY OF RIVERSIDE
BUILDING & SAFETY

THIS APPROVAL DOES NOT AUTHORIZE VIOLATION OF ANY PROVISIONS OF STATE OR LOCAL BUILDING REGULATIONS NOR DOES IT PREVENT REQUIRING CORRECTIONS OF ANY ERROR SUBSEQUENTLY IDENTIFIED ON THESE PLANS OR CONSTRUCTED DUE TO ERRORS IN THESE PLANS

Permit: 06-1787
Date: 07/13/06
By: P. Hamilton/B. Kaijan (SSR)

SCOPE OF WORK

1. LANDSCAPE IMPROVEMENT TO EXISTING PARK.
2. NEW ORNAMENTAL STRUCTURES: ENTRY GATE, GAZEBO, AND TRELLIS.

WHITE PARK SITE PLAN
1" = 10'-0"

N

KEY NOTES

PROJECT ARCHITECT •

krohdesign ARCHITECTS

LICENSED ARCHITECT
STEVEN MICHAEL KROH
No. C012790
Ren. 7.31.2007
STATE OF CALIFORNIA

ADDRESS 6180 Brockton Ave. Suite 202, Riverside, CA 92506
PHONE (951) 788.5940 FACSIMILE (951) 788.1365
EMAIL info@krohdesign.com WEBSITE krohdesign.com

CONSULTANT •

PROJECT •

WHITE PARK-JAPANESE GARDEN

3936 CHESTNUT STREET
RIVERSIDE, CA 92501

REVISIONS △ •

△1 PLAN CHECK CORRECTIONS 05/08/06

ISSUED ○ •

THIS DRAWING AND THE DESIGNS, ARRANGEMENTS, DEPICTIONS, IDEAS AND OTHER INFORMATION CONTAINED HEREIN CONSTITUTE UNPUBLISHED WORK OF KROH DESIGN ARCHITECTS AND SHALL REMAIN PROPERTY OF KROH DESIGN ARCHITECTS IN PERPETUITY. NO PART THEREOF SHALL BE REPRODUCED, COPIED, DISCLOSED, DISTRIBUTED,SOLD, PUBLISHED OR OTHERWISE USED IN ANYWAY WITHOUT THE ADVANCE EXPRESS WRITTEN CONSENT OF KROH DESIGN ARCHITECTS. VISUAL CONTACT WITH THE ABOVE DRAWINGS, OR ANY PART THEREOF, SHALL CONSTITUTE CONCLUSIVE EVIDENCE OF ACCEPTANCE OF THESE RESTRICTIONS.

SHEET TITLE •

SITE PLAN

DRAWN	• R.NICHOLS
CHECKED	• -
APPROVED	• -
SCALE	• 1"=10'-0"
DATE	• 04/18/06
JOB	• 06003
SHEET	•

A-0

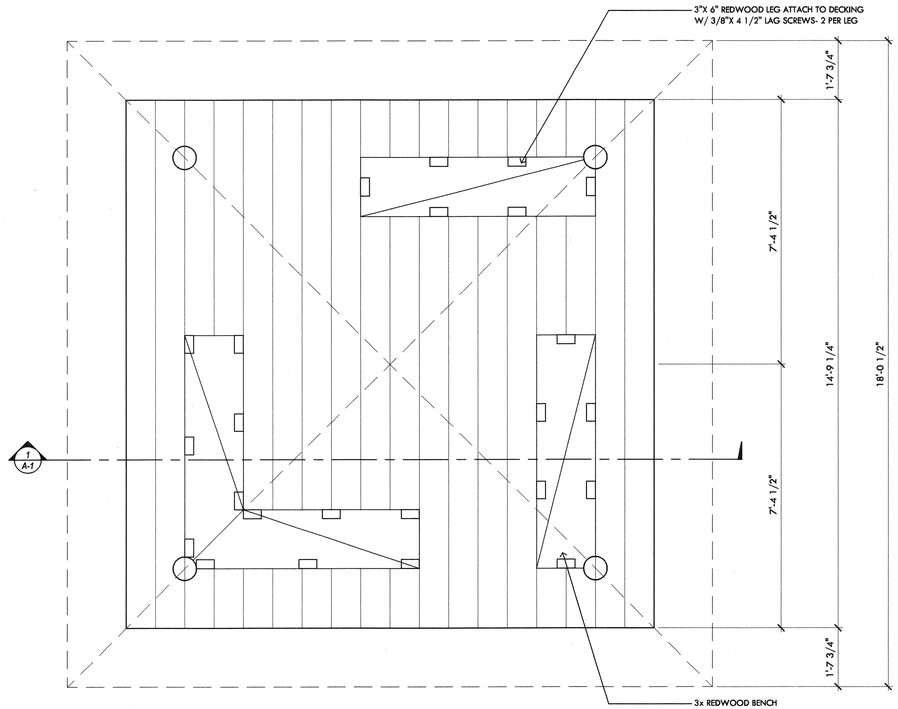

FLOOR PLAN

1/2" = 1'-0"

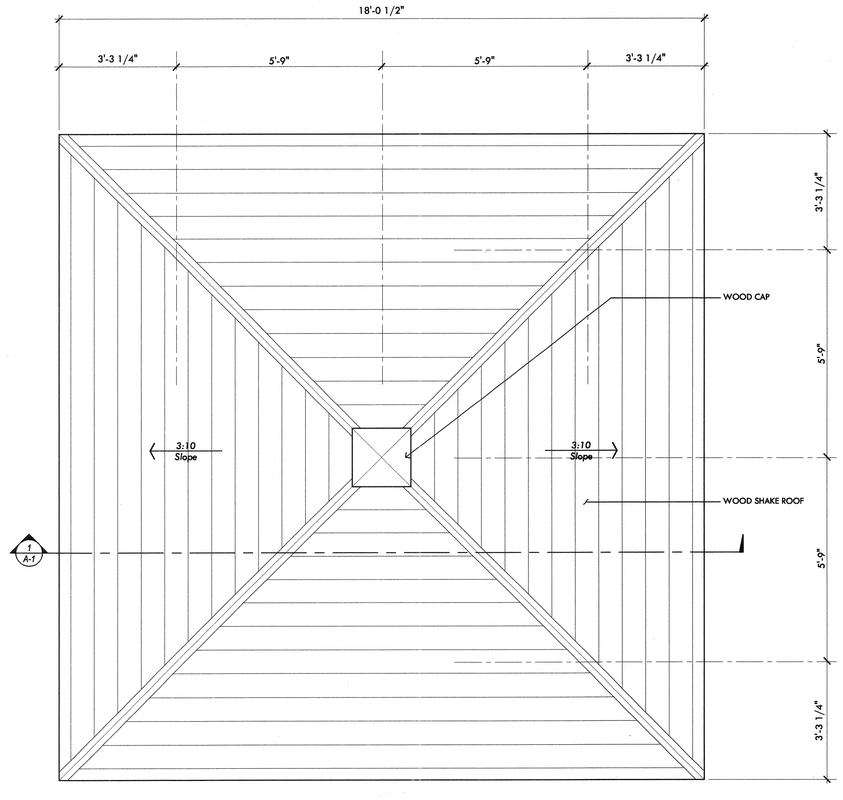

ROOF PLAN

1/2" = 1'-0"

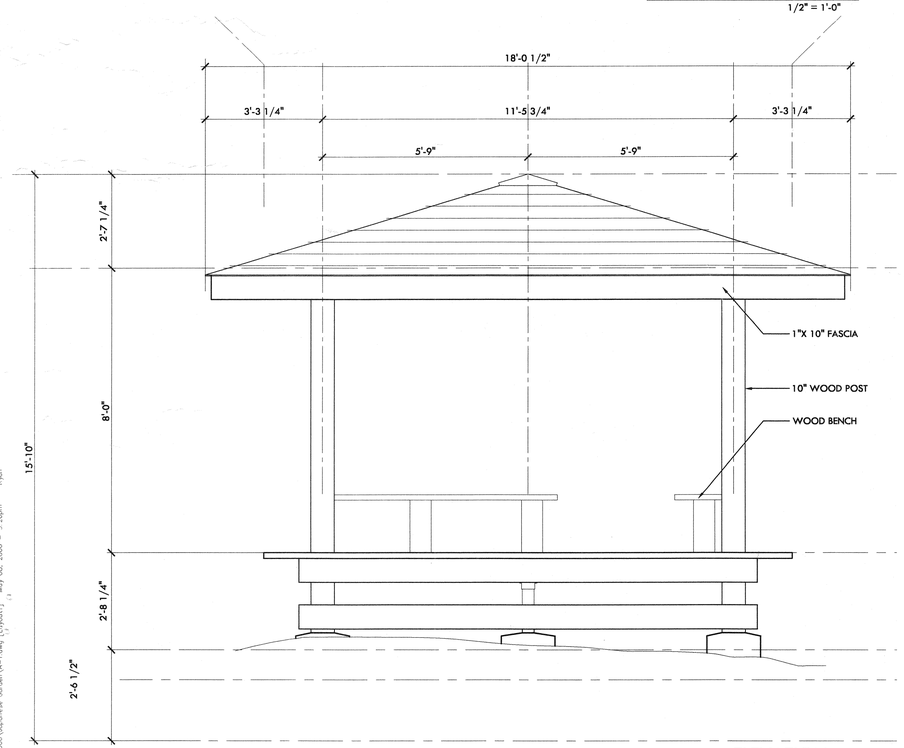

ELEVATION

1/2" = 1'-0"

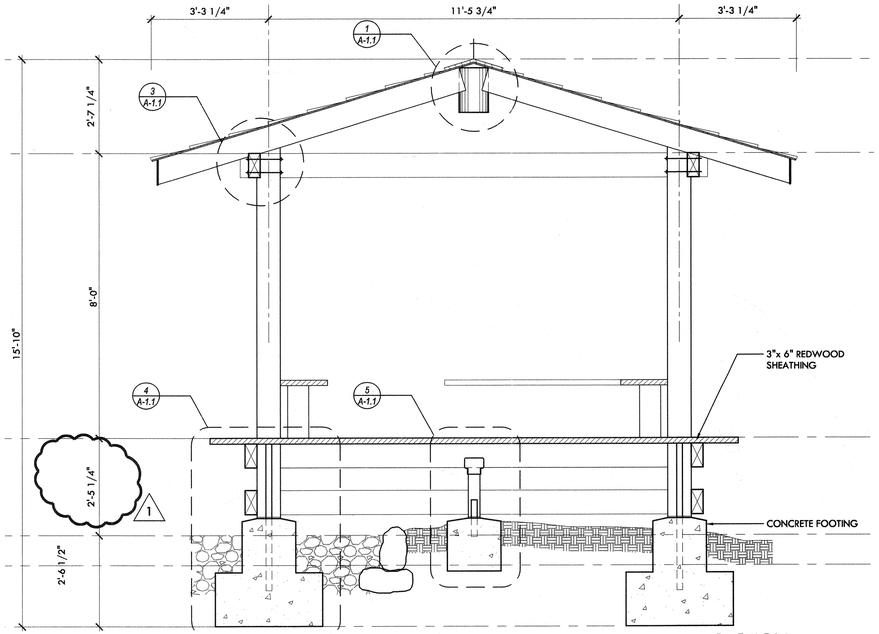

SECTION

1/2" = 1'-0"

FLOOR AREA= 218 SQ.FT.

KEY NOTES

PROJECT ARCHITECT

krohdesign ARCHITECTS

LICENSED ARCHITECT
STEVEN MICHAEL KROH
No. C012790
Ren. 7.31.2007
STATE OF CALIFORNIA

ADDRESS 6188 Brockton Ave. Suite 202, Riverside, CA 92506
PHONE (951) 788.5948 | FACSIMILE (951) 788.1365
EMAIL info@krohdesign.com | WEBSITE krohdesign.com

CONSULTANT

REGISTERED PROFESSIONAL ENGINEER
LONNIE P. MOUNT
NO. 3834
EXP. 3-31-2008
STRUCTURAL
STATE OF CALIFORNIA

PROJECT

WHITE PARK-
JAPANESE GARDEN

3936 CHESTNUT STREET
RIVERSIDE, CA 92501

REVISIONS

1 PLAN CHECK CORRECTIONS 05/08/06

ISSUED

THIS DRAWING AND THE DESIGNS, ARRANGEMENTS, DEPICTIONS, IDEAS AND OTHER INFORMATION CONTAINED HEREIN CONSTITUTE UNPUBLISHED WORK OF KROH DESIGN ARCHITECTS AND SHALL REMAIN PROPERTY OF KROH DESIGN ARCHITECTS IN PERPETUITY. NO PART THEREOF SHALL BE REPRODUCED, COPIED, DISCLOSED, DISTRIBUTED,SOLD, PUBLISHED OR OTHERWISE USED IN ANYWAY WITHOUT THE ADVANCE EXPRESS WRITTEN CONSENT OF KROH DESIGN ARCHITECTS. VISUAL CONTACT WITH THE ABOVE DRAWINGS, OR ANY PART THEREOF, SHALL CONSTITUTE CONCLUSIVE EVIDENCE OF ACCEPTANCE OF THESE RESTRICTIONS.

SHEET TITLE

TEA HOUSE:
FLOOR PLAN,
ROOF PLAN,
ELEVATION, SECTION

DRAWN	R.NICHOLS
CHECKED	-
APPROVED	-
SCALE	1/2"=1'-0"
DATE	04/18/06
JOB	06003
SHEET	

A-1

F:\2006\Japanese Garden\A-1.dwg [Layout1] May 08, 2006 - 3:26pm Ryan

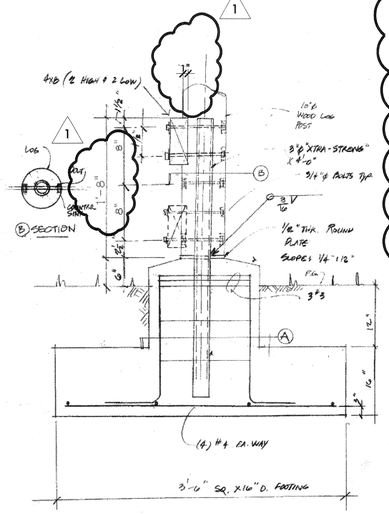

ALTERNATE PAD FOOTING

1

SCALE
NOT TO SCALE
4

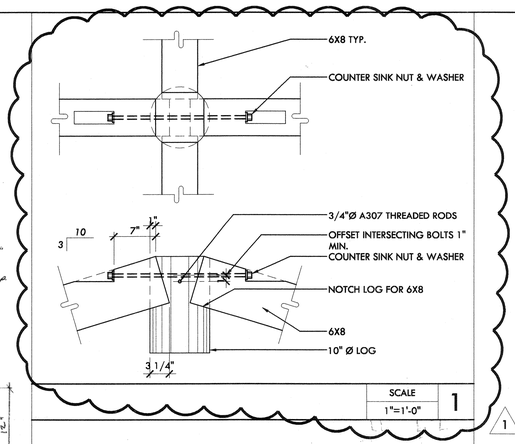

SCALE
1"=1'-0"
1

1

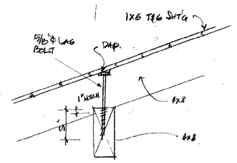

2

SCALE
NOT TO SCALE
2

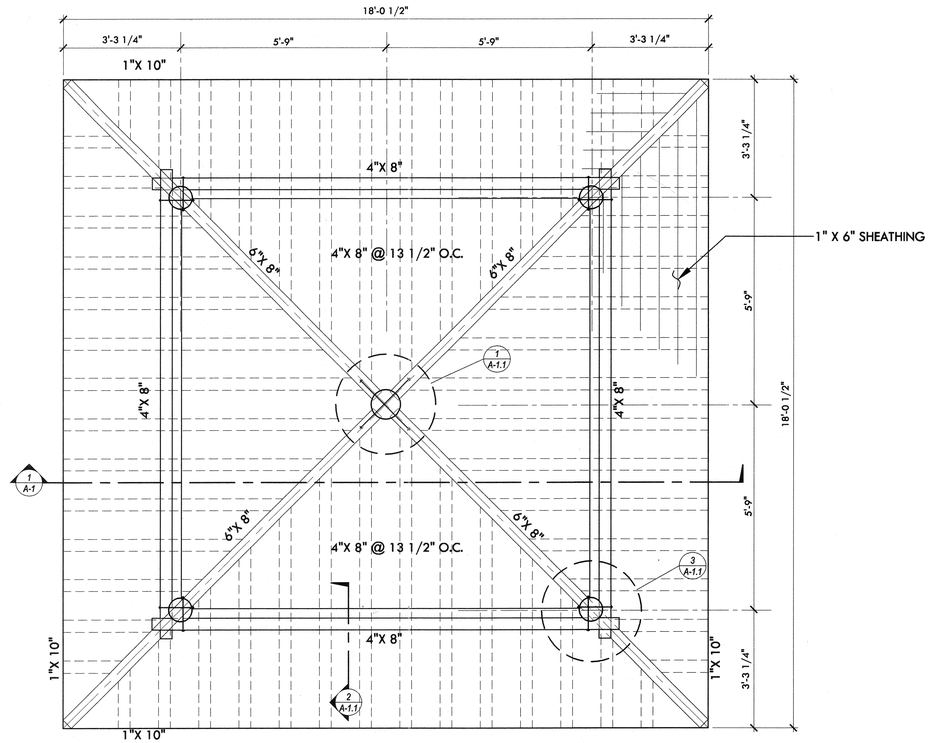

FRAMING PLAN
1/2" = 1'-0"

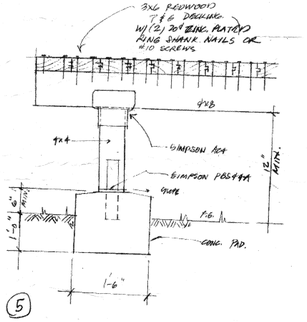

5

SCALE
NOT TO SCALE
6

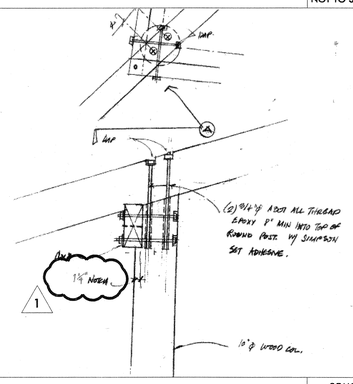

SCALE
NOT TO SCALE
3

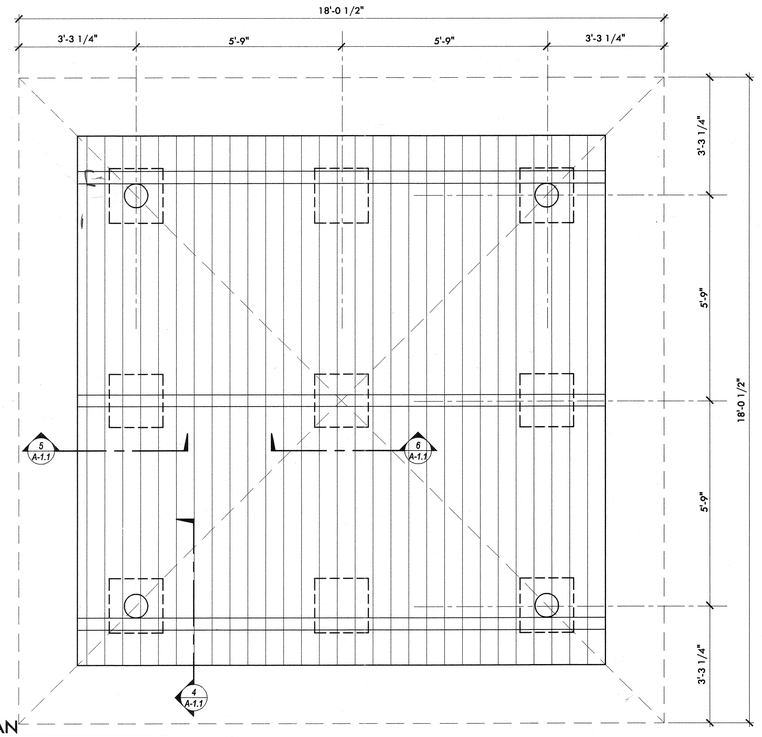

FLOOR FRAMING PLAN
1/2" = 1'-0"

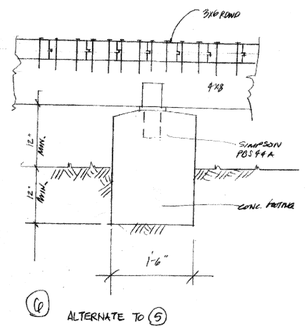

6 ALTERNATE TO 5

SCALE
NOT TO SCALE
7

PROJECT ARCHITECT •
krohdesign ARCHITECTS
ADDRESS 6180 Brockton Ave. Suite 202, Riverside, CA 92506
PHONE (951) 788.5948 FACSIMILE (951) 788.1365
EMAIL info@krohdesign.com WEBSITE krohdesign.com

LICENSED ARCHITECT STEVEN MICHAEL KROH No. C012790 Ren. 7.31.2007 STATE OF CALIFORNIA

CONSULTANT •

REGISTERED PROFESSIONAL ENGINEER LONNIE P. MOUNT NO. 3834 EXP. 3-31-2008 STRUCTURAL STATE OF CALIFORNIA

PROJECT •

WHITE PARK-
JAPANESE GARDEN

3936 CHESTNUT STREET
RIVERSIDE, CA 92501

REVISIONS △ •

1 PLAN CHECK CORRECTIONS 05/08/06

ISSUED ○ •

THIS DRAWING AND THE DESIGNS, ARRANGEMENTS, DEPICTIONS, IDEAS AND OTHER INFORMATION CONTAINED HEREIN CONSTITUTE UNPUBLISHED WORK OF KROH DESIGN ARCHITECTS AND SHALL REMAIN PROPERTY OF KROH DESIGN ARCHITECTS IN PERPETUITY. NO PART THEREOF SHALL BE REPRODUCED, COPIED, DISCLOSED, DISTRIBUTED,OLD, PUBLISHED OR OTHERWISE USED IN ANYWAY WITHOUT THE ADVANCE EXPRESS WRITTEN CONSENT OF KROH DESIGN ARCHITECTS. VISUAL CONTACT WITH THE ABOVE DRAWINGS, OR ANY PART THEREOF, SHALL CONSTITUTE CONCLUSIVE EVIDENCE OF ACCEPTANCE OF THESE RESTRICTIONS.

SHEET TITLE
TEA HOUSE: FRAMING PLAN, FLOOR FRAMING PLAN, STRUCTURAL DETAILS

DRAWN	• R.NICHOLS
CHECKED	• -
APPROVED	• -
SCALE	• AS NOTED
DATE	• 04/18/06
JOB	• 06003
SHEET	•

A-1.1

F:\2005\Japanese Garden\A-1.1.dwg [Layout1] May 08, 2006 - 3:31pm Ryan

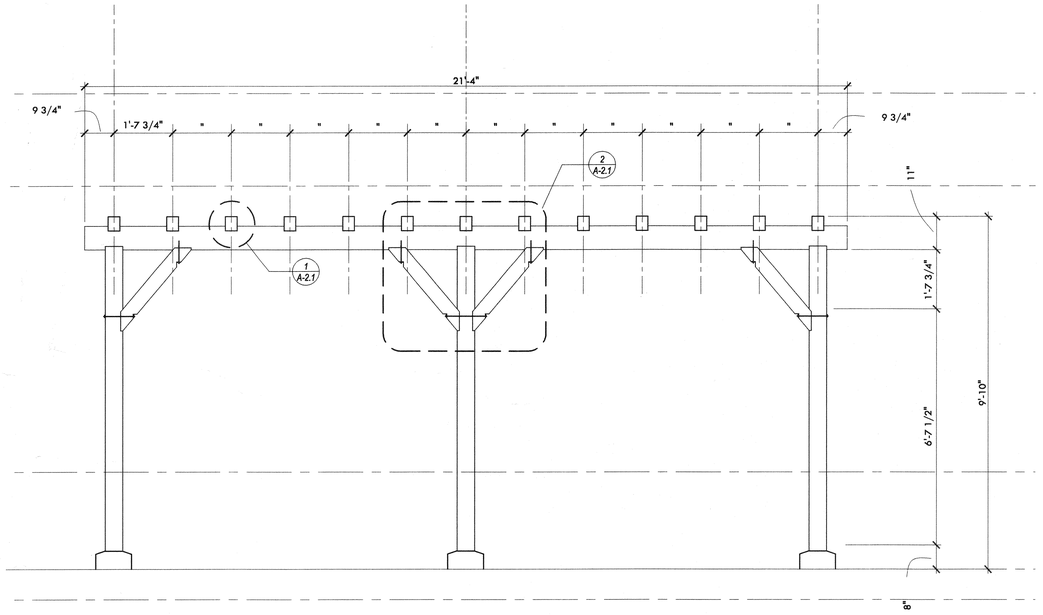

ELEVATION
1/2" = 1'-0"

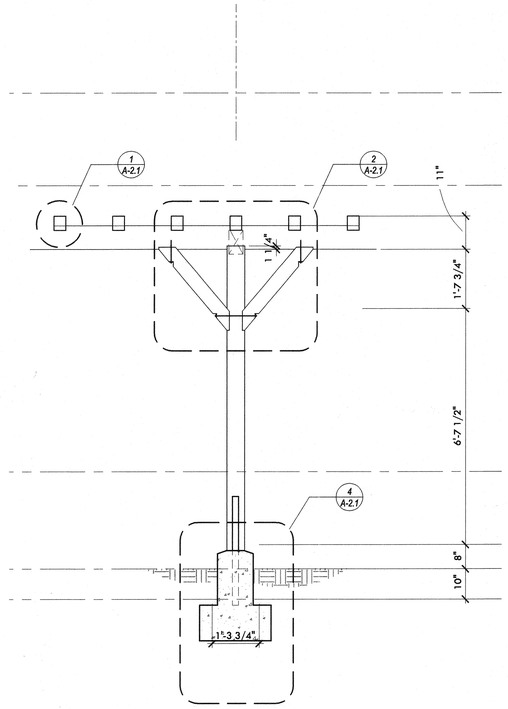

SECTION
1/2" = 1'-0"

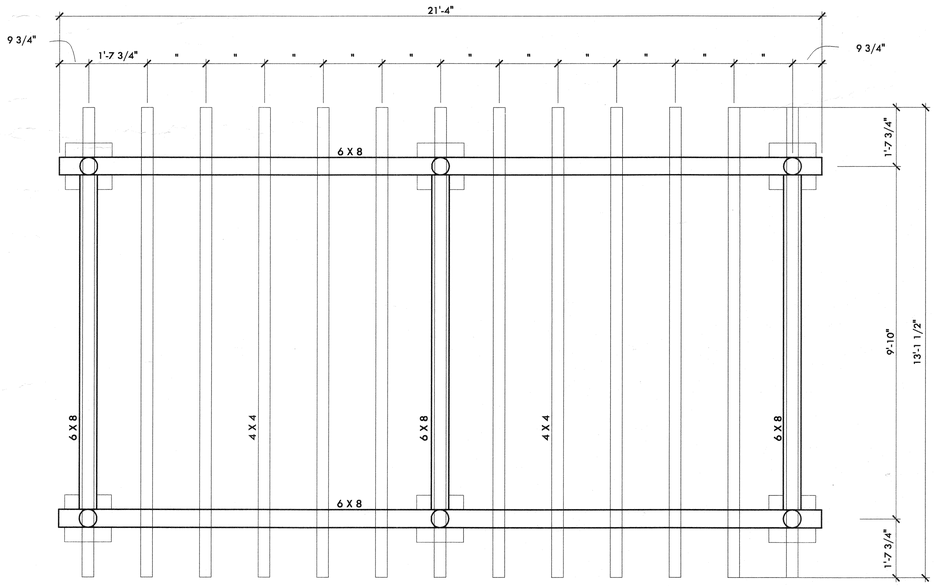

FRAMING PLAN
1/2" = 1'-0"

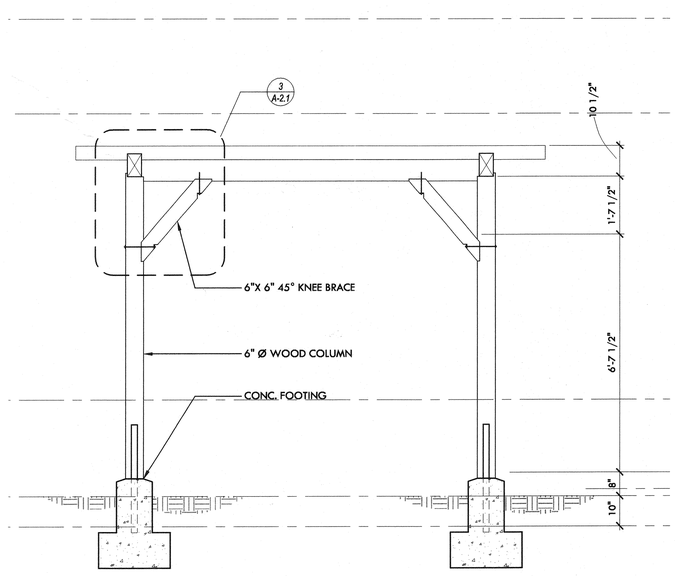

SECTION
1/2" = 1'-0"

KEY NOTES

ALL LUMBER TO BE REDWOOD #1

ALL POLES TO BE ALASKA CEDAR #1

PROJECT ARCHITECT •

krohdesign ARCHITECTS

LICENSED ARCHITECT STEVEN MICHAEL KROH No. C012790 Ren. 7.31.2007 STATE OF CALIFORNIA

ADDRESS 6180 Brockton Ave. Suite 202, Riverside, CA 92506
PHONE (951) 788.5940 FACSIMILE (951) 788.1365
EMAIL info@krohdesign.com WEBSITE krohdesign.com

CONSULTANT •

REGISTERED PROFESSIONAL ENGINEER LONNIE P. MOUNT NO. 3834 EXP. 3-31-2008 STRUCTURAL STATE OF CALIFORNIA

PROJECT •

**WHITE PARK-
JAPANESE GARDEN**

3936 CHESTNUT STREET
RIVERSIDE, CA 92501

REVISIONS △ •

△1 PLAN CHECK CORRECTIONS 05/08/06

ISSUED ○ •

THIS DRAWING AND THE DESIGNS, ARRANGEMENTS, DEPICTIONS, IDEAS AND OTHER INFORMATION CONTAINED HEREIN CONSTITUTE UNPUBLISHED WORK OF KROH DESIGN ARCHITECTS AND SHALL REMAIN PROPERTY OF KROH DESIGN ARCHITECTS IN PERPETUITY. NO PART THEREOF SHALL BE REPRODUCED, COPIED, DISCLOSED, DISTRIBUTED, SOLD, PUBLISHED OR OTHERWISE USED IN ANYWAY WITHOUT THE ADVANCE EXPRESS WRITTEN CONSENT OF KROH DESIGN ARCHITECTS. VISUAL CONTACT WITH THE ABOVE DRAWINGS, OR ANY PART THEREOF, SHALL CONSTITUTE CONCLUSIVE EVIDENCE OF ACCEPTANCE OF THESE RESTRICTIONS.

SHEET TITLE •

**TRELLIS:
FRAMING PLAN,
ELEVATION,
SECTIONS**

DRAWN	• R.NICHOLS
CHECKED	• -
APPROVED	• -
SCALE	• 1/2"= 1'-0"
DATE	• 04/18/06
JOB	• 06003
SHEET	•

A-2

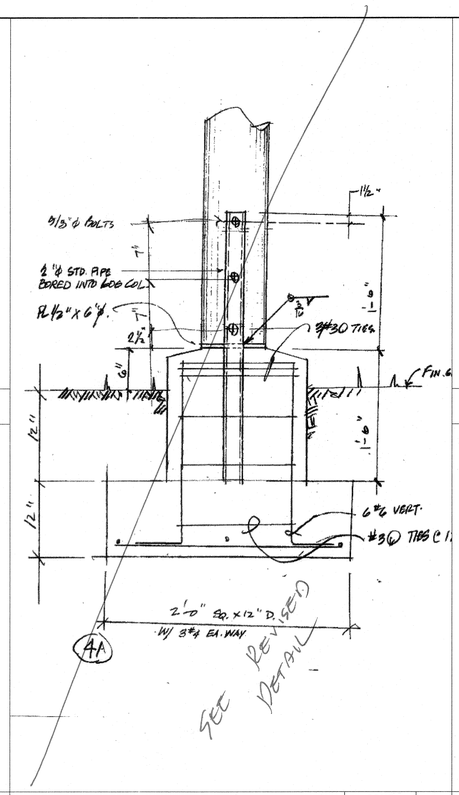

SCALE NOT TO SCALE 4

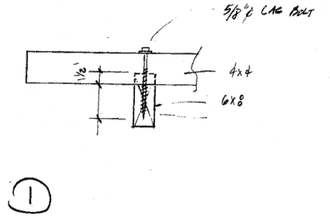

SCALE NOT TO SCALE 1

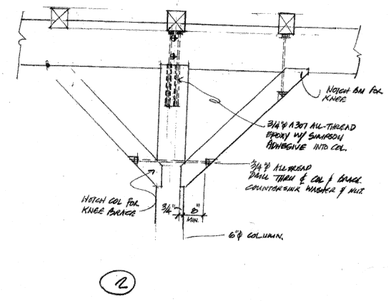

SCALE NOT TO SCALE 2

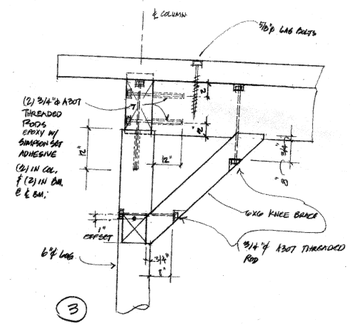

SCALE NOT TO SCALE 3

PROJECT ARCHITECT •

krohdesign ARCHITECTS

LICENSED ARCHITECT SYLVIA MICHAEL KROH No. C012790 Ren. 7.31.2007 STATE OF CALIFORNIA

6188 Brockton Ave. Suite 202, Riverside, CA 92506
PHONE (951) 788.5948 | FACSIMILE (951) 788.1365
EMAIL info@krohdesign.com | WEBSITE krohdesign.com

CONSULTANT •

REGISTERED PROFESSIONAL ENGINEER LONNIE P. MOUNT NO. 3834 EXP. 3-31-2008 STRUCTURAL STATE OF CALIFORNIA

PROJECT •

WHITE PARK-
JAPANESE GARDEN

3936 CHESTNUT STREET
RIVERSIDE, CA 92501

REVISIONS △ •

1 PLAN CHECK CORRECTIONS 05/08/06

ISSUED ○ •

THIS DRAWING AND THE DESIGNS, ARRANGEMENTS, DEPICTIONS, IDEAS AND OTHER INFORMATION CONTAINED HEREIN CONSTITUTE UNPUBLISHED WORK OF KROH DESIGN ARCHITECTS AND SHALL REMAIN THE PROPERTY OF KROH DESIGN ARCHITECTS. THEY ARE NOT TO BE USED BY ANY PERSON FOR ANY PURPOSE, COPIED, DISCLOSED, DISTRIBUTED, SOLD, PERISHED OR OTHERWISE USED IN ANYWAY WITHOUT THE ADVANCE, EXPRESS WRITTEN CONSENT OF KROH DESIGN ARCHITECTS. VISUAL CONTACT WITH THE ABOVE DRAWINGS, OR ANY PART THEREOF, SHALL CONSTITUTE CONCLUSIVE EVIDENCE OF ACCEPTANCE OF THESE RESTRICTIONS.

SHEET TITLE •

TRELLIS: STRUCTURAL DETAILS

DRAWN	•
CHECKED	• -
APPROVED	• -
SCALE	• NOT TO SCALE
DATE	• 04/18/06
JOB	• 06003
SHEET	•

A-2.1

F:\2006\Jap-Jurse Garden\A-2.1.dwg [Layout1] May 08, 2006 - 3:29pm Ryan

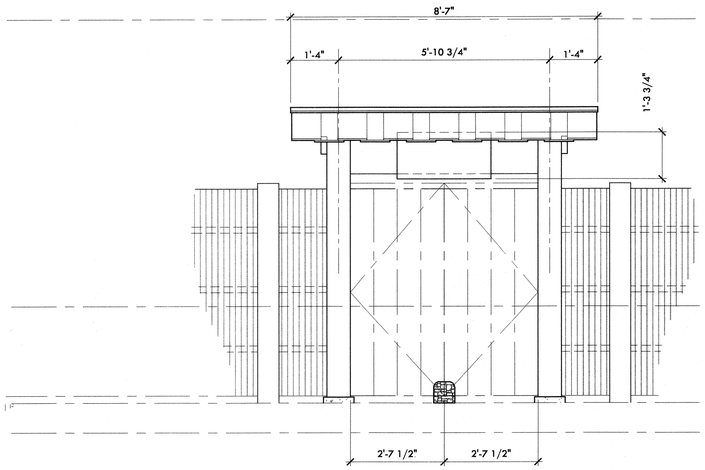

ELEVATION
1/2" = 1'-0"

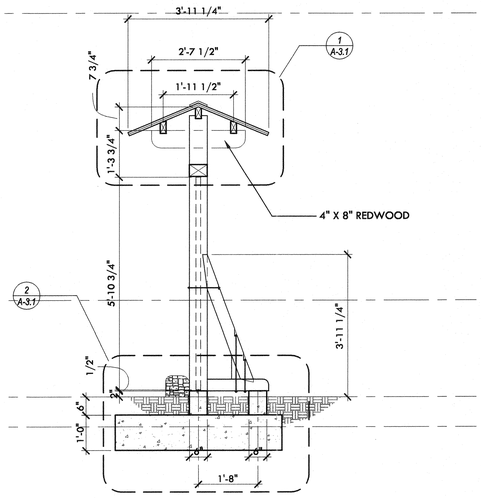

SECTION
1/2" = 1'-0"

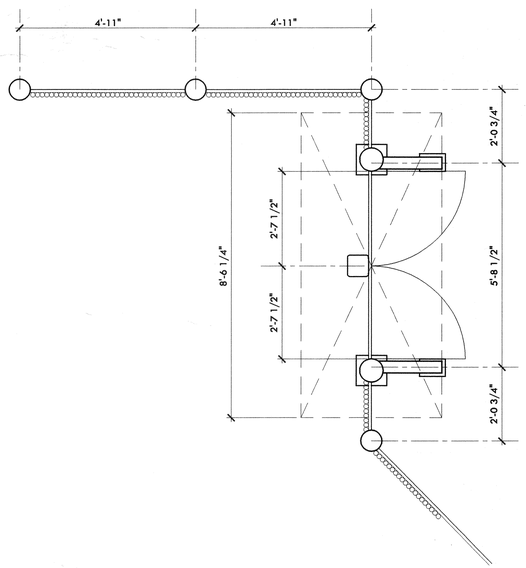

FLOOR PLAN
1/2" = 1'-0"

F:\2006\Japanese Garden\A-3.dwg [Layout1] Jul 08, 2006 - 3:28pm Ryan

KEY NOTES

PROJECT ARCHITECT •

krohdesign
ARCHITECTS

LICENSED ARCHITECT
STEPHEN MICHAEL KROH
No. C012790
Ren. 7.31.2007
STATE OF CALIFORNIA

ADDRESS 6188 Brockton Ave. Suite 202, Riverside, CA 92506
PHONE (951) 788.5948 | FACSIMILE (951) 788.1365
EMAIL info@krohdesign.com | WEBSITE krohdesign.com

CONSULTANT •

REGISTERED PROFESSIONAL ENGINEER
LONNIE P. MCVAY
NO. 3834
EXP. 3-31-2008
STRUCTURAL
STATE OF CALIFORNIA

PROJECT •

WHITE PARK-
JAPANESE GARDEN

3936 CHESTNUT STREET
RIVERSIDE, CA 92501

REVISIONS △ •

△1 PLAN CHECK CORRECTIONS 05/08/06

ISSUED ○ •

THIS DRAWING AND THE DESIGNS, ARRANGEMENTS, DEPICTIONS, IDEAS AND OTHER INFORMATION CONTAINED HEREIN CONSTITUTE UNPUBLISHED WORK OF KROH DESIGN ARCHITECTS AND SHALL REMAIN PROPERTY OF KROH DESIGN ARCHITECTS IN PERPETUITY. NO PART THEREOF SHALL BE REPRODUCED, COPIED, DISCLOSED, DISTRIBUTED,SOLD, PUBLISHED OR OTHERWISE USED WITHOUT THE PRIOR WRITTEN CONSENT, ASSURANCE,EXPRESS WRITTEN CONSENT OF KROH DESIGN ARCHITECTS. VISUAL CONTACT WITH THE ABOVE DRAWINGS, OR ANY PART THEREOF, SHALL CONSTITUTE CONCLUSIVE EVIDENCE OF ACCEPTANCE OF THESE RESTRICTIONS.

SHEET TITLE •

ENTRY GATE: FLOOR PLAN, ELEV., & SECTION

DRAWN	• R.NICHOLS
CHECKED	• -
APPROVED	• -
SCALE	• 1/2"=1'-0"
DATE	• 04/18/06
JOB	• 06003
SHEET	•

A-3

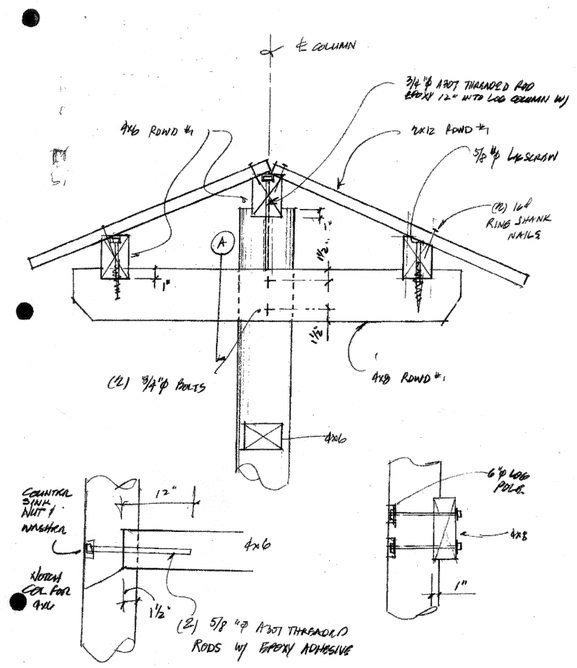

1

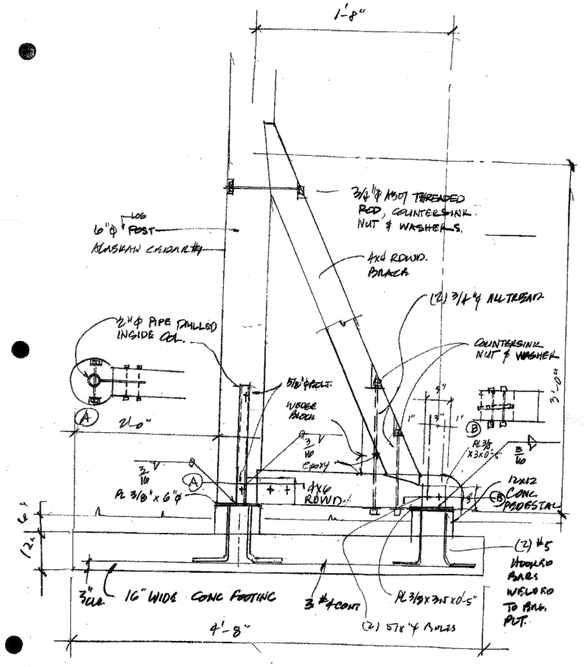

2

PROJECT ARCHITECT •

krohdesign
ARCHITECTS

LICENSED ARCHITECT
STEVEN MICHAEL KROH
No. C012790
Ren. 7.31.2007
STATE OF CALIFORNIA

ADDRESS 6180 Brockton Ave. Suite 202, Riverside, CA 92506
PHONE (951) 788.5948 | FACSIMILE (951) 788.1365
EMAIL info@krohdesign.com | WEBSITE krohdesign.com

CONSULTANT •

REGISTERED PROFESSIONAL ENGINEER
LONNIE P. MOUNT
NO. 3834
EXP. 3-31-2008
STRUCTURAL
STATE OF CALIFORNIA

PROJECT •

WHITE PARK-
JAPANESE GARDEN

3936 CHESTNUT STREET
RIVERSIDE, CA 92501

REVISIONS △ •

△1 PLAN CHECK CORRECTIONS 05/08/06

ISSUED ○ •

THIS DRAWING AND THE DESIGNS, ARRANGEMENTS, DEPICTIONS, IDEAS AND OTHER INFORMATION CONTAINED HEREIN CONSTITUTE UNPUBLISHED WORK OF KROH DESIGN ARCHITECTS AND SHALL REMAIN THE PROPERTY OF KROH DESIGN ARCHITECTS IN PERPETUITY. ANY PART THEREOF SHALL NOT BE REPRODUCED, COPIED, DISCLOSED, DISTRIBUTED/SOLD, PERISHED OR OTHERWISE USED IN ANY WAY WITHOUT THE ADVANCE EXPRESS WRITTEN CONSENT OF KROH DESIGN ARCHITECTS. VISUAL CONTACT WITH THE ABOVE DRAWINGS, OR ANY PART THEREOF, SHALL CONSTITUTE CONCLUSIVE EVIDENCE OF ACCEPTANCE OF THESE RESTRICTIONS.

SHEET TITLE •

ENTRY GATE: STRUCTURAL DETAILS

DRAWN	•
CHECKED	• -
APPROVED	• -
SCALE	• NOT TO SCALE
DATE	• 04/18/06
JOB	• 06003
SHEET	•

A-3.1

P:\2006\Jobs\06003 for dwg\A-3.1.dwg [Layout1] Fri, Oct 06, 2006 - 3:28pm Ryan