CANYON SPRINGS ASSESSMENT DISTRICT

CITY OF RIVERSIDE, CALIFORNIA

	ITEM DESCRIPTION	UNIT	QUANTITY
32	CONSTRUCT MH JM PER CITY OF RIVERSIDE STD. NO. 432	EA.	1
33	INSTALL 24" R.C.P., 1000D	LF	32
34	CONSTRUCT BIFURCATION STRUCTURE PER DETAILS ON SHEET 8	LS	1
35	CONSTRUCT 24" TIMBER BULKHEAD PER CITY OF RIV. STD. NO. 456.	EA	4
* 36	CONSTRUCT 18" TIMBER BULKHEAD PER CITY OF RIV. STD. NO. 456.	EA	2
* 37	CONSTRUCT CATCH BASIN PER CITY OF RIVERSIDE STD. NO. 405 W WITH 18" R.C.P.	EA	1
* △1 38	CONST. 6' CONC. BLOCK WALL PER CITY OF RIVERSIDE STD. NO. 704, EXCEPT FOOTING SHALL BE 22" WIDE. WALL TO START AT CORNER BY NEW GATE AND GO TO EXISTING C.L. FENCE.		
△2 39	CONST. 18" GMP DROP INLET PER CALTRANS STD. PLAN D75		

* NOT A PAY ITEM, TO BE CONSTRUCTED BY OTHERS

CONSTRUCTION NOTES AND QUANTITY ESTIMATE

FOR SHEETS 3A THRU 7A

	ITEM DESCRIPTION	UNIT	QUANTITY
1	INSTALL 54" RCP, 800D	LF	97
2	INSTALL 72" RCP, 800D	LF	715
* 3	CONSTRUCT AND INSTALL 66" DIA TIMBER BULKHEAD PER CITY OF RIVERSIDE STD DWG No. 456	EA.	(1)
* 4	CONSTRUCT CATCH BASIN WITH 18" R.C.P. PER CITY OF RIVERSIDE STD. DWG. NO. 406 (SEE SHEET NO. 6).	EA	5
5	CONNECT EXISTING 54" RCP TO MANHOLE	EA	1
* 6	PRECAST DOUBLE 6'x 3' R.C.B. PER CALTRANS STD. D81	LF.	63
7	CONSTRUCT DOUBLE 5' x 2' RCB PER CALTRANS STD D81	LF	57
* 8	CONSTRUCT WARPED WINGWALL PER CALTRANS STD D86-A	EA	2
* 9	CONSTRUCT PARAPET PER CALTRANS STD D83	EA	2
* 10	CONSTRUCT CONCRETE CHANNEL R.C.F.C. STD DWG No. CH326 (SEE DETAILS ON SHEET 7A).	LF	(424)
* 11	CONSTRUCT CONCRETED ROCK PER DETAIL ON SHEET 6	SF	580
12	CONSTRUCT TRANSITION STRUCTURE PER DETAIL A-A ON SHEET 6	EA	1
13	CONSTRUCT TRANSITION STRUCTURE PER DETAIL B-B ON SHEET 6	EA	1
14	CONSTRUCT MANHOLE AX PER CITY OF RIVERSIDE STD DWG No. 430	EA	2
* 15	CONSTRUCT 6" THICK AGGREGATE BASE ACCESS ROAD (SEE SHT. 7A)	C.Y.	150
* 16	CONSTRUCT REINFORCED CONC. WALL (SEE: SHEET NO. 7A)	SF	3553
* 17	CONSTRUCT 6" CURB (TYPE II) PER CITY OF RIVERSIDE STD. NO. 200	LF	345
* 18	CONSTRUCT DOUBLE 7' x 3' RCB PER CALTRANS STD D81	LF	107
* 19	INSTALL CHAIN LINK FENCE PER CITY OF RIVERSIDE STD DWG No. 380 H=72"	LF	1060
* 20	CONSTRUCT MODIFIED CONCRETE CHANNEL PER R.C.F.C.D. STD. CH 326 (SEE SHT. 7A)	LF	983
* 21	CONSTRUCT CHAIN LINK FENCE ON TOP OF WALL H=72" PER CITY OF RIVERSIDE STD. NO. 380.	LF	740
* 22	PREFABRICATED 66"x 51" REINFORCED CONCRETE ECCENTRIC REDUCER	EA	(1)
* 23	CONSTRUCT 36" CSP DROP INLET PER CITY OF RIVERSIDE STD NO. 442	EA	(1)
* 24	CONSTRUCT 36" CSP DRAINAGE INLET RISER CONNECTION PER CALTRANS STD. D93	EA	(1)
* 25	INSTALL 18" RCP, 1650 D	LF	64
* 26	REMOVE EXISTING HEADWALLS AT BOX SPRINGS BLVD	EA	2
* 27	REMOVE EXISTING 24" CSP CULVERTS	LF	420
* 28	CONSTRUCT VAR. THICKNESS FULL DEPTH A.C. PAVEMENT.	TON	135
* 29	CONSTRUCT 6" CURB & GUTTER, TYPE I, PER CITY OF RIVERSIDE STD. 200.	LF	60
* 30	CONSTRUCT CHAIN LINK FENCE PER CITY OF RIVERSIDE STD. NO. 380, H=72"	LF	(805)
* 31	CONSTRUCT DRIVEWAY PER CITY OF RIVERSIDE STD. 302, TYPE IV, A=20' B=27'	SF	324

CONSTRUCTION NOTES AND QUANTITY ESTIMATES CONTINUED ABOVE.

HOLD HARMLESS INDEMNIFICATIONCLAUSE

THE CONTRACTOR AGREES THAT HE SHALL ASSUME SOLE AND COMPLETE RESPONSIBILITY FOR JOB SITE CONDITIONS DURING THE COURSE OF CONSTRUCTION OF THE PROJECT INCLUDING SAFETY OF ALL PERSON AND PROPERTY; THAT THIS REQUIREMENT SHALL APPLY CONTINUOUSLY AND NOT BE LIMITED TO NORMAL WORKING HOURS; AND THAT THE CONTRACTOR SHALL DEFEND, INDEMNIFY, AND HOLD THE COUNTY OF RIVERSIDE, THE OWNER, AND THE PRIVATE ENGINEERS HARMLESS FOR ANY AND ALL LIABILITY; REAL OR ALLEGED, IN CONNECTION WITH PERFORMANCE OF WORK ON THIS PROJECT, EXCEPTING FOR LIABILITY ARISING FROM THE SOLE NEGLIGENCE OF THE OWNER OR THE ENGINEER.

EXISTING UNDERGROUND STRUCTURES

THE EXISTENCE AND LOCATION OF ANY UNDERGROUND UTILITY PIPE STRUCTURES OR CONDUITS SHOWN ON THESE PLANS ARE OBTAINED BY A SEARCH OF THE AVAILABLE RECORDS. TO THE BEST OF OUR KNOWLEDGE, THERE ARE NO EXISTING UTILITIES EXCEPT AS SHOWN ON THESE PLANS. IT SHALL BE THE CONTRACTOR'S RESPONSIBILITY TO NOTIFY THE OWNERS OF THE UTILITIES OR STRUCTURES CONCERNED BEFORE STARTING WORK. CONTRACTOR FURTHER ASSUMES ALL LIABILITY AND RESPONSIBILITY FOR THE UNDERGROUND UTILITY PIPES, CONDUITS OR STRUCTURES SHOWN OR NOT SHOWN ON THESE PLANS.

NOTICE TO CONTRACTOR

CONTRACTOR SHALL VERIFY ALL CONDITIONS AND DIMENSIONS AND SHALL REPORT ALL DISCREPANCIES TO THE ENGINEER PRIOR TO THE COMMENCEMENT OF WORK.

STORM DRAIN PLANS FOR: PARCEL MAP NO. 19617

PHASE IV

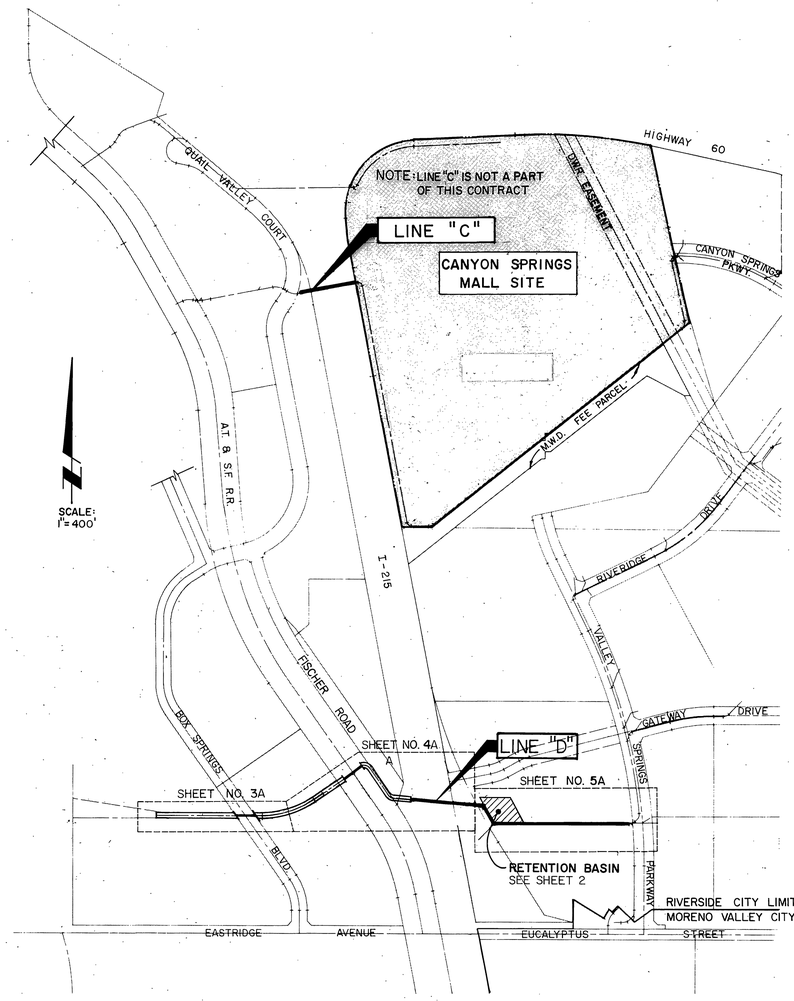

NOTE: NO FURTHER DEVELOPMENT ALLOWED IN THE LINE "D" DRAINAGE AREA UNTIL THE RETENTION BASIN IS BUILT.

INDEX MAP
SCALE: 1" = 400'

REGISTERED PROFESSIONAL ENGINEER EDWARD L. RESLEY No. C 41649 Exp. 12-31-95 CIVIL STATE OF CALIFORNIA

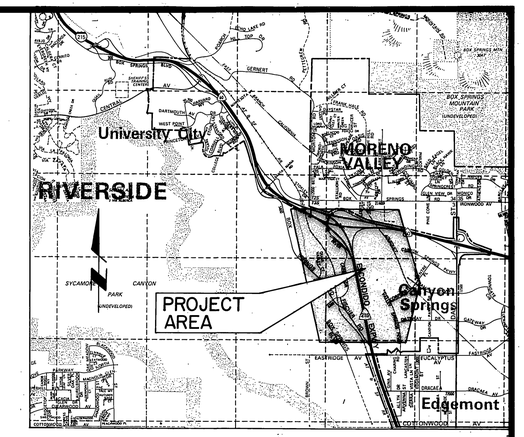

VICINITY MAP
NOT TO SCALE

GENERAL NOTES

1. IT SHALL BE THE RESPONSIBILITY OF THE CONTRACTOR TO CLEAR THE RIGHT-OF-WAY IN ACCORDANCE WITH THE PROVISIONS OF LAW AS IT AFFECTS EACH UTILITY INCLUDING IRRIGATION LINES AND APPURTENANCES AND AT NO COST TO THE CITY.
2. CONSTRUCTION SHALL BE IN ACCORDANCE WITH THE CITY OF RIVERSIDE DEPARTMENT OF PUBLIC WORKS, STANDARD DRAWINGS, STANDARD DRAWING #10, AND THE STANDARD SPECIFICATIONS FOR PUBLIC WORKS CONSTRUCTION, **CURRENT EDITION,**
3. QUANTITIES SHOWN ARE FOR INFORMATION ONLY AND THE CITY OF RIVERSIDE IS NOT RESPONSIBLE FOR THEIR ACCURACY.
4. BEFORE THE RIP RAP IS ACCEPTED, AS PLACED, AT THE OUTLET OF ANY DRAINAGE STRUCTURE, IT SHALL BE TESTED UNDER FLOWS AS CLOSE AS POSSIBLE TO DESIGN CONDITIONS WITH WATER OBTAINED FROM FIRE HYDRANTS IN THE IMMEDIATE AREA.
5. THE PRIVATE ENGINEER SIGNING THESE PLANS IS RESPONSIBLE FOR ASSURING THE ACCURACY AND ACCEPTABILITY OF THE WORK HEREON. IN THE EVENT OF DISCREPANCIES ARISING DURING CONSTRUCTION, THE PRIVATE ENGINEER SHALL BE RESPONSIBLE FOR DETERMINING AN ACCEPTABLE SOLUTION AND REVISING THE PLANS FOR APPROVAL BY THE CITY.
6. THE CONTRACTOR SHALL CALL IN A LOCATION REQUEST TO UNDERGROUND SERVICE ALERT (USA), PHONE NO. 1-800-422-4133. TWO WORKING DAYS BEFORE DIGGING. NO CONSTRUCTION PERMIT WILL BE ISSUED BY THE PUBLIC WORKS DEPARTMENT INVOLVING EXCAVATION FOR UNDERGROUND FACILITIES UNLESS THE APPLICANT HAS BEEN PROVIDED AN INQUIRY IDENTIFICATION NUMBER BY U.S.A.
7. THE *CONTRACTOR* SHALL BE RESPONSIBLE FOR PRESERVING OR RE-ESTABLISHING AND REFERENCING SURVEY MONUMENTS DESTROYED, DISTURBED OR BURIED AS A RESULT OF CONSTRUCTION SHOWN HEREON.
8. THE BASIS OF BEARINGS IS THE CENTERLINE OF EUCALYPTUS AVENUE BEARING SOUTH 89°50'09" EAST PER R/S 62/53-56, RIVERSIDE COUNTY RECORDS.

SHEET INDEX

SHT	
1	TITLE SHEET
2	RETENTION BASIN PLAN
5A	REVISED SOUTHWEST CHANNEL PLAN & PROFILE, LINE D.
6 & 7	REVISED SOUTHWEST CHANNEL SECTIONS & DETAILS.
8	RETENTION BASIN BIFURCATION STRUCTURE DETAILS.
9-10	RETENTION BASIN DETAILS

NOTIFICATIONS

NOTE: THE CONTRACTOR SHALL NOTIFY THE FOLLOWING UTILITIES OR AGENCIES 48 HOURS PRIOR TO STARTING CONSTRUCTION OR EXCAVATION:

RIVERSIDE COUNTY ROAD DEPT. CONSTRUCTION SECTION:	(714) 787-2031 (714) 787-2032
EASTERN MUNICIPAL WATER DISTRICT - JIM WYATT:	(714) 925-7676 EXT. 225
GENERAL TELEPHONE:	1-(800) 422-4133
SOUTHERN CALIFORNIA GAS COMPANY:	1-(800) 422-4133
UNDERGROUND SERVICE ALERT:	1-(800) 422-4133
CALTRANS:	(714) 383-4631
CITY OF RIVERSIDE; PUBLIC WORKS DEPT:	(714) 782-5341
SOUTHERN PACIFIC PIPE LINES, INC:	(714) 877-2373

THIS PROJECT INCLUDES SHEETS 1, 2, 5A, 6, 8, 9 & 10 ONLY

REVIEWED BY: DATE:

SOUTHERN CALIFORNIA GAS CO.
REVIEWED BY: 2-18-92 DATE:

CITY OF RIVERSIDE ELECTRICAL DEPT.
REVIEWED BY: J-6-92 DATE:
REVIEWED BY: DATE:

BENCH MARK: RIV. CO.:B.M.

BRASS DISK MARKED 600-47-68, IS 1.7 MILES NW ALONG THE AT & SF RAILWAY FROM THE STATION @ MARCH FIELD, SET BETWEEN THE TRACK AND INTERSTATE 215, 64.5' SW OF THE SW EDGE OF THE HIGHWAY, 43.6' NE OF THE NE RAIL OF TRACK, 20' SE OF POST, IRON B.M. DISK SET ON TOP OF A CONCRETE POST 0.4' ABOVE THE GROUND.
ELEVATION = 1536.119

Greiner
Greiner, Inc.
5225 Canyon Crest Drive
Building 200, Suite 253
Riverside, California 92507-6323
(714) 788-7746
FAX: (714) 788-5002

PLANS PREPARED UNDER THE DIRECTION OF: EDWARD L. RESLEY
EXPIRATION DATE: 12-31-95 R.C.E. NO. 41649 DATE 1-29-92

MARK	REVISIONS	APPR.	DATE
2	REVISED FOR CHANGED FIELD CONDITIONS DUE TO CALTRANS CONST.		11/16/92 11-6-92
1	ADDED BLOCK WALL IN PLACE OF C.L. FENCE		1/1/94

DESIGNED BY V.T. DRAWN BY R.N./DL CHECKED BY M.G.S.

CITY OF RIVERSIDE
PUBLIC WORKS DEPARTMENT

APPROVED BY	DATE	BY
PRINCIPAL ENGINEER	3/25/92	
PARK DEPARTMENT	—	—
TRAFFIC DIVISION	—	—
CHIEF P. W. ENGINEER	11/16/92	
	11/16/92	

APPROVED BY
PUBLIC WORKS DIRECTOR
DATE 4/1/92

DRAINAGE PLAN AND PROFILE
CANYON SPRINGS ASSESSMENT DISTRICT
PARCEL MAP NO. 19617
TITLE SHEET

ACCOUNT NO. D-595
SHEET 1 OF 10

INDEXED 2/5/96

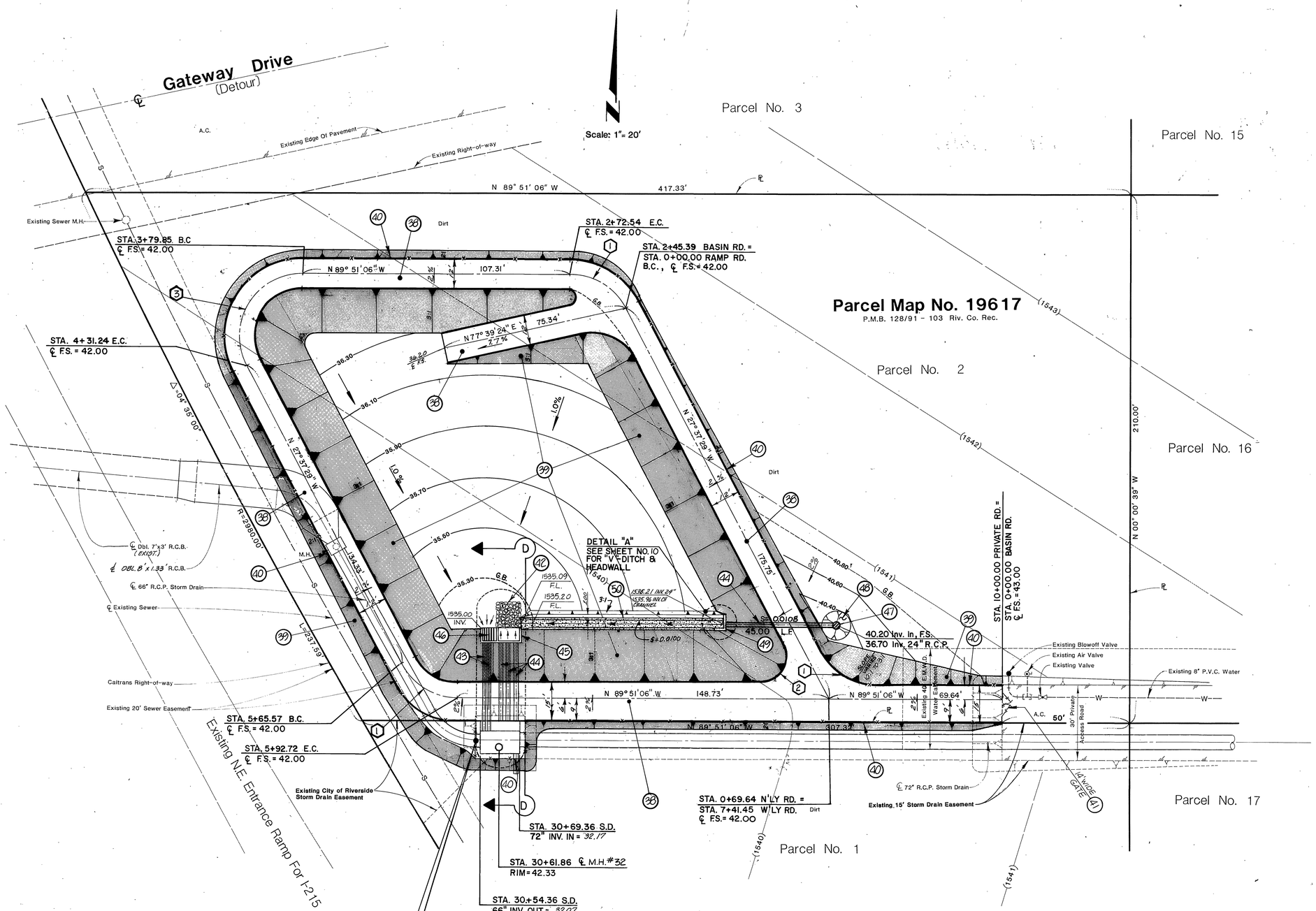

CONSTRUCTION NOTES

FOR SHEETS 2, 9 AND 10

38. SURFACE ACCESS ROAD AND BASIN ACCESS RAMP WITH AGGREGATE BASE 6" THICK
39. SLOPE CONTROL PLANTING (HYDROSEEDING)
40. INSTALL 6' CHAIN LINK FENCE PER CITY OF RIVERSIDE STD. DWG. NO. 380
41. INSTALL 14' DOUBLE GATE PER CITY OF RIVERSIDE STD. DWG. NO. 380
42. CONCRETED ROCK PER SECTION "C-C" ON SHEET NO. 9.
43. 18" RCP, 1500D
44. 24" RCP, 1500D
45. INLET & OUTLET STRUCTURE (INCL. HEADWALL APRON & CUTOFF-WALL) (SEE SHEET NO. 9)
46. TRASH RACK (SEE SHEET NO. 9)
47. CONSTRUCT C.S.P. INLET PER CITY OF RIVERSIDE STD. DWG. NO. 412
48. 3" THICK A.C. SLOPE PAVING AROUND C.S.P. INLET (SEE DETAIL ON SHEET 10)
49. CONSTRUCT "L" HEADWALL PER CALTRANS STD. DWG. D89 (SEE SHT. NO.10)
50. CONSTRUCT CONCRETE SWALE PER DETAIL "A" (SEE SHEET NO.10).

LEGEND

- Prop. Slope
- Existing Slope
- Existing A.C. Paving
- G.B. — Grade Break
- S.D. — Storm Drain
- F.S. — Finished Surface
- (1541) — Existing Elevation
- 1541 — Proposed Elevation
- ℄ — Property Line
- ℄ — Center Line

CURVE DATA				
⬡	RADIUS	DELTA	LENGTH	TANGENT
1	25.00'	62°13'37"	27.15'	15.09'
2	10.00'	117°46'23"	20.56'	16.57'
3	25.00'	117°46'23"	51.39'	41.42'

REGISTERED PROFESSIONAL ENGINEER
DONALD W. BERGH
NO. 28949
EXP. 3-31-95
CIVIL
STATE OF CALIFORNIA

BENCH MARK: RIV. CO.:B.M.

BRASS DISK MARKED 600-47-68, IS 1.7 MILES NW ALONG THE AT & SF RAILWAY FROM THE STATION @ MARCH FIELD, SET BETWEEN THE TRACK AND INTERSTATE 215, 64.5' SW OF THE SW EDGE OF THE HIGHWAY, 43.6' NE OF THE NE RAIL OF TRACK, 20' SE OF POST, IRON B.M. DISK SET ON TOP OF A CONCRETE POST 0.4' ABOVE THE GROUND.

ELEVATION = 1536.119

Greiner

Greiner, Inc.
5225 Canyon Crest Drive
Building 200, Suite 253
Riverside, California 92507-6323
(714) 788-7746
FAX: (714) 788-5002

PLANS PREPARED UNDER THE DIRECTION OF: DONALD W. BERGH

EXPIRATION DATE: 3-31-95 R.C.E. NO. 28949 DATE 1-29-92

MARK	REVISIONS	APPR.	DATE

DESIGNED BY V.T. DRAWN BY T.A.G. CHECKED BY D.W.B

CITY OF RIVERSIDE
PUBLIC WORKS DEPARTMENT

APPROVED BY	DATE	BY
PRINCIPAL ENGINEER	3/25/92	
PARK DEPARTMENT		
TRAFFIC DIVISION		
CHIEF P.W. ENGINEER	11/19/92	

APPROVED BY
PUBLIC WORKS DIRECTOR
DATE 11/20/92

DRAINAGE PLAN
CANYON SPRINGS ASSESSMENT DISTRICT
RETENTION BASIN

ACCOUNT NO. D-595

SHEET 2 OF 10

INDEXED 2/5/96

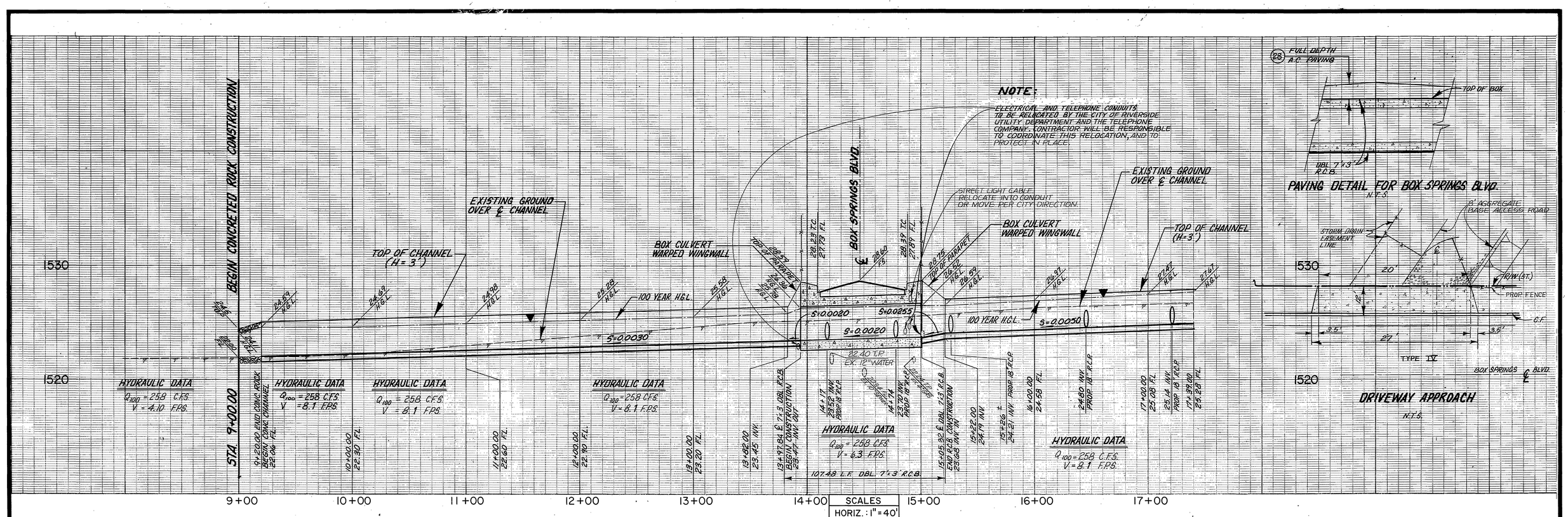

CURVE DATA				
⬡	Δ	R	L	T
Ⓐ	22° 45' 20"	500.00'	198.58'	100.62'

NOTE: PROTECT IN PLACE ALL EXISTING SPRINKLER SYSTEMS AND LANDSCAPE ADJACENT TO DRAINAGE EASEMENT DURING CONSTRUCTION.

SCALES
HORIZ.: 1" = 40'
VERT.: 1" = 4'
SCALE IN FEET
0 40 80 120 160

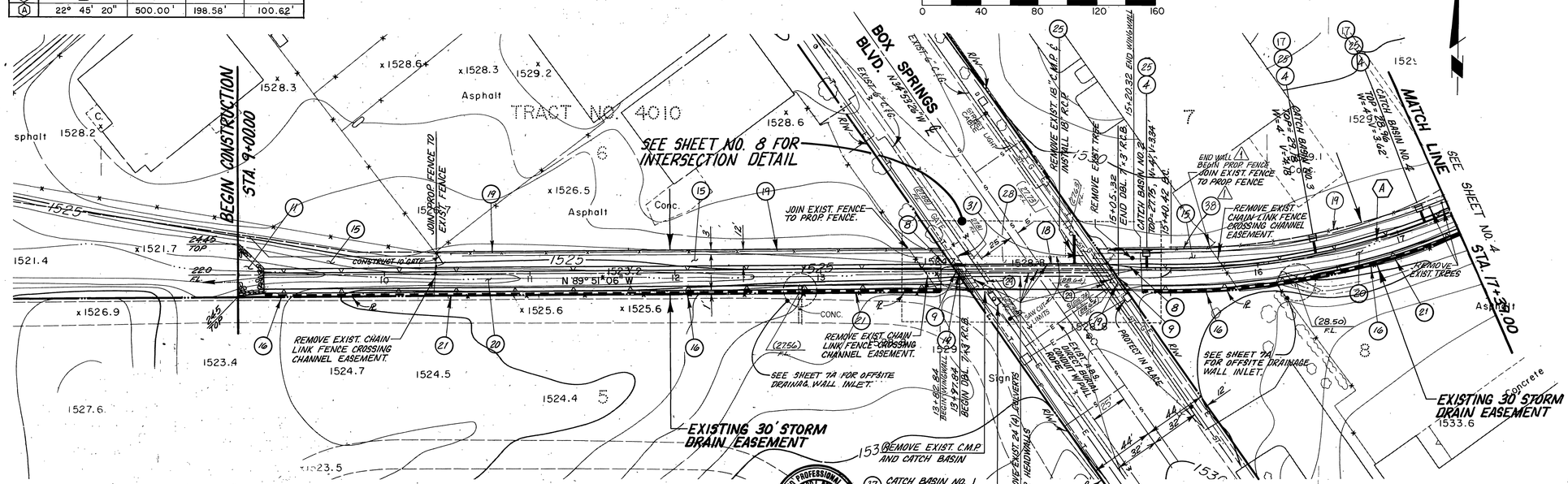

NOTE: SEE SHEET NO. 7A FOR TYPICAL CHANNEL SECTIONS.

CONSTRUCTION NOTES

4. CONSTRUCT CATCH BASIN WITH 18" R.C.P. PER CITY OF RIVERSIDE STD. DWG. NO. 406 (SEE SHEET NO. 6)
8. CONSTRUCT WARPED WINGWALL PER CALTRANS STD. D86-A.
9. CONSTRUCT PARAPET PER CALTRANS STD. D83.
11. CONSTRUCT CONCRETED ROCK PER DETAIL ON SHEET 6.
15. CONSTRUCT 6" THICK AGGREGATE BASE ACCESS ROAD (SEE SHEET 7A).
16. CONSTRUCT REINF. CONC. WALL (SEE SHEET 7A).
17. CONSTRUCT 6" CURB, TYPE II, PER CITY OF RIVERSIDE STD. DWG. NO. 200
18. CONSTRUCT DOUBLE 7'x3' R.C.B. PER CALTRANS STD. D81.
19. INSTALL CHAIN LINK FENCE PER CITY OF RIVERSIDE STD. NO. 380, H=72".
20. CONSTRUCT MODIFIED CONCRETE CHANNEL PER DETAIL ON SHT. 7A.
21. REMOVE EXIST. CHAIN LINK FENCE AND INSTALL NEW CHAIN LINK FENCE PER CITY OF RIVERSIDE STD. 380, ON TOP OF WALL. H=72"
25. INSTALL 18" R.C.P., 1650 D.
26. REMOVE EXISTING HEADWALL AT BOX SPRINGS BLVD.
27. REMOVE EXISTING C.S.P. CULVERT(S).
28. CONSTRUCT FULL DEPTH A.C. PAVEMENT (SEE PAVING DETAIL ABOVE).
29. CONSTRUCT 6" CURB & GUTTER, TYPE 1, PER CITY OF RIVERSIDE STD. 200. (SEE INTERSECTION DETAIL ON SHEET 8 FOR LIMITS).
31. CONSTRUCT DRIVEWAY PER CITY OF RIVERSIDE STD. NO. 302, TYPE IV, A=20' B=27'.
37. CONSTRUCT CATCH BASIN PER CITY OF RIVERSIDE STD. 405 W/18" R.C.P.
⚠ 38. CONST. 6' CONC. BLOCK WALL PER CITY OF RIVERSIDE STD. DWG. NO. 704, EXCEPT FOOTING SHALL BE 22" WIDE. WALL TO START AT CORNER BY NEW GATE AND GO TO EXIST. C.L. FENCE.

BENCH MARK: RIV. CO.:B.M.

BRASS DISK MARKED 600-47-68, IS 1.7 MILES NW ALONG THE AT & SF RAILWAY FROM THE STATION @ MARCH FIELD, SET BETWEEN THE TRACK AND INTERSTATE 215, 64.5' SW OF THE SW EDGE OF THE HIGHWAY, 43.6' NE OF THE NE RAIL OF TRACK, 20' SE OF POST, IRON B.M. DISK SET ON TOP OF A CONCRETE POST 0.4' ABOVE THE GROUND.

ELEVATION = 1536.119

REGISTERED PROFESSIONAL ENGINEER EDWARD L. RESLEY No. C 41649 EXP. 12-31-91 CIVIL STATE OF CALIFORNIA

Greiner

Greiner, Inc.
5225 Canyon Crest Drive
Building 200, Suite 253
Riverside, California 92507-6323
(714) 788-7746
FAX: (714) 788-5002

PLANS PREPARED UNDER THE DIRECTION OF: EDWARD L. RESLEY

EXPIRATION DATE: 12-31-91 R.C.E. NO. 41649 DATE 1-29-92

MARK	REVISIONS	APPR.	DATE
1	ADDED BLOCK WALL IN PLACE OF C.L. FENCE		1/14/91

DESIGNED BY V.T. DRAWN BY T.A.G. CHECKED BY M.G.S.

CITY OF RIVERSIDE
PUBLIC WORKS DEPARTMENT

APPROVED BY	DATE	BY
PRINCIPAL ENGINEER	3/5/92	
PARK DEPARTMENT	—	—
TRAFFIC DIVISION	—	—
CHIEF P. W. ENGINEER	4/16/92	

APPROVED BY
PUBLIC WORKS DIRECTOR
DATE 4.16.92

DRAINAGE PLAN AND PROFILE
CANYON SPRINGS ASSESSMENT DISTRICT
STA. 9+00.00 to STA. 17+39.00
LINE "D"

HORIZ. SCALE: 1" = 40' VERT. SCALE: 1" = 4'

ACCOUNT NO. D-595

SHEET 3A OF 10

INDEXED 2/5/96

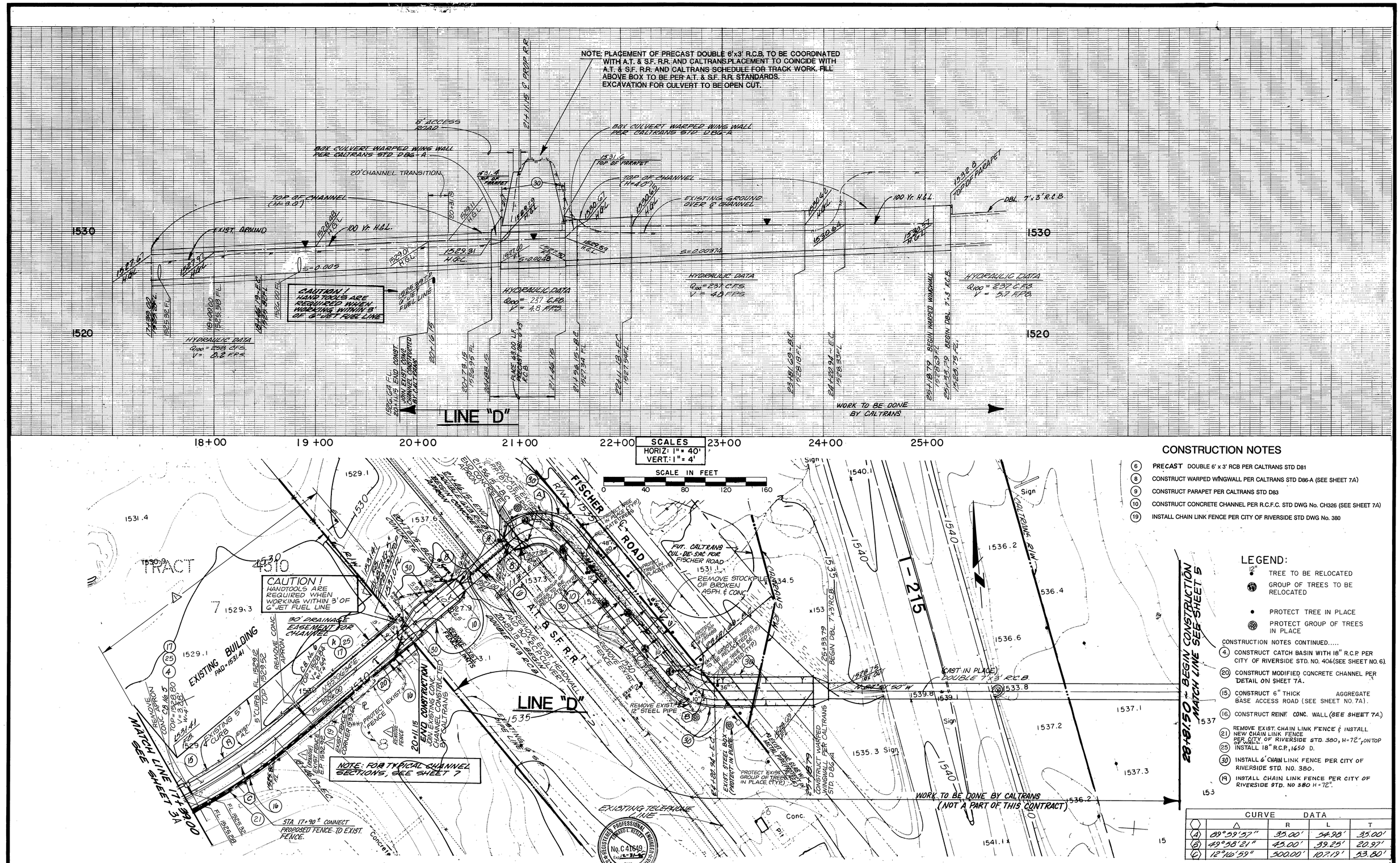

SCALES
HORIZ: 1" = 40'
VERT: 1" = 4'

SCALE IN FEET
0 40 80 120 160

CONSTRUCTION NOTES

6. PRECAST DOUBLE 6' x 3' RCB PER CALTRANS STD D81
8. CONSTRUCT WARPED WINGWALL PER CALTRANS STD D86-A (SEE SHEET 7A)
9. CONSTRUCT PARAPET PER CALTRANS STD D83
10. CONSTRUCT CONCRETE CHANNEL PER R.C.F.C. STD DWG No. CH326 (SEE SHEET 7A)
19. INSTALL CHAIN LINK FENCE PER CITY OF RIVERSIDE STD DWG No. 380

LEGEND:

- 12" TREE TO BE RELOCATED
- GROUP OF TREES TO BE RELOCATED
- PROTECT TREE IN PLACE
- PROTECT GROUP OF TREES IN PLACE

CONSTRUCTION NOTES CONTINUED.....

4. CONSTRUCT CATCH BASIN WITH 18" R.C.P. PER CITY OF RIVERSIDE STD. NO. 406 (SEE SHEET NO. 6).
20. CONSTRUCT MODIFIED CONCRETE CHANNEL PER DETAIL ON SHEET 7A.
15. CONSTRUCT 6" THICK AGGREGATE BASE ACCESS ROAD (SEE SHEET NO. 7A).
16. CONSTRUCT REINF. CONC. WALL (SEE SHEET 7A.)
21. REMOVE EXIST. CHAIN LINK FENCE & INSTALL NEW CHAIN LINK FENCE PER CITY OF RIVERSIDE STD. 380, H=72", ON TOP OF WALL.
25. INSTALL 18" R.C.P., 1650 D.
30. INSTALL 6' CHAIN LINK FENCE PER CITY OF RIVERSIDE STD. NO. 380.
19. INSTALL CHAIN LINK FENCE PER CITY OF RIVERSIDE STD. NO 380 H=72".

CURVE DATA

	Δ	R	L	T
A	89°59'57"	35.00'	54.98'	35.00'
B	49°58'21"	45.00'	39.25'	20.97'
C	12°16'59"	500.00'	107.19'	53.80'

BENCH MARK: RIV. CO.:B.M.

BRASS DISK MARKED 600-47-68, IS 1.7 MILES NW ALONG THE AT & SF RAILWAY FROM THE STATION @ MARCH FIELD, SET BETWEEN THE TRACK AND INTERSTATE 215, 64.5' SW OF THE SW EDGE OF THE HIGHWAY, 43.6' NE OF THE NE RAIL OF TRACK, 20' SE OF POST, IRON B.M. DISK SET ON TOP OF A CONCRETE POST 0.4' ABOVE THE GROUND.

ELEVATION = 1536.119

REGISTERED PROFESSIONAL ENGINEER EDWARD L. RESLEY No. C41649 Exp. 12-31-95 CIVIL STATE OF CALIFORNIA

Greiner
Greiner, Inc.
5225 Canyon Crest Drive
Building 200, Suite 253
Riverside, California 92507-6323
(714) 788-7746
FAX: (714) 788-5002

PLANS PREPARED UNDER THE DIRECTION OF: EDWARD L. RESLEY

EXPIRATION DATE: 12-31-95 R.C.E. NO. 41649 DATE 1-29-92

MARK	REVISIONS	APPR.	DATE
1	REVISED FENCE CONST. / REMOVAL	MF	1/6/92

DESIGNED BY V.T. DRAWN BY R.N./D.L. CHECKED BY M.G.S.

CITY OF RIVERSIDE
PUBLIC WORKS DEPARTMENT

APPROVED BY	DATE	BY
PRINCIPAL ENGINEER	3/25/92	
PARK DEPARTMENT	—	—
TRAFFIC DIVISION	—	—
CHIEF P.W. ENGINEER	3/16/92	RMC
	3/16/92	

APPROVED BY: PUBLIC WORKS DIRECTOR
DATE 3/16/92

DRAINAGE PLAN AND PROFILE
CANYON SPRINGS ASSESSMENT DISTRICT
STA. 17+39.00 TO STA. 28+81.54
LINE "D"

HORIZ. SCALE: 1" = 40' VERT. SCALE: 1" = 4'

ACCOUNT NO. D-595

SHEET 4A OF 10

INDEXED 2/5/96 GH

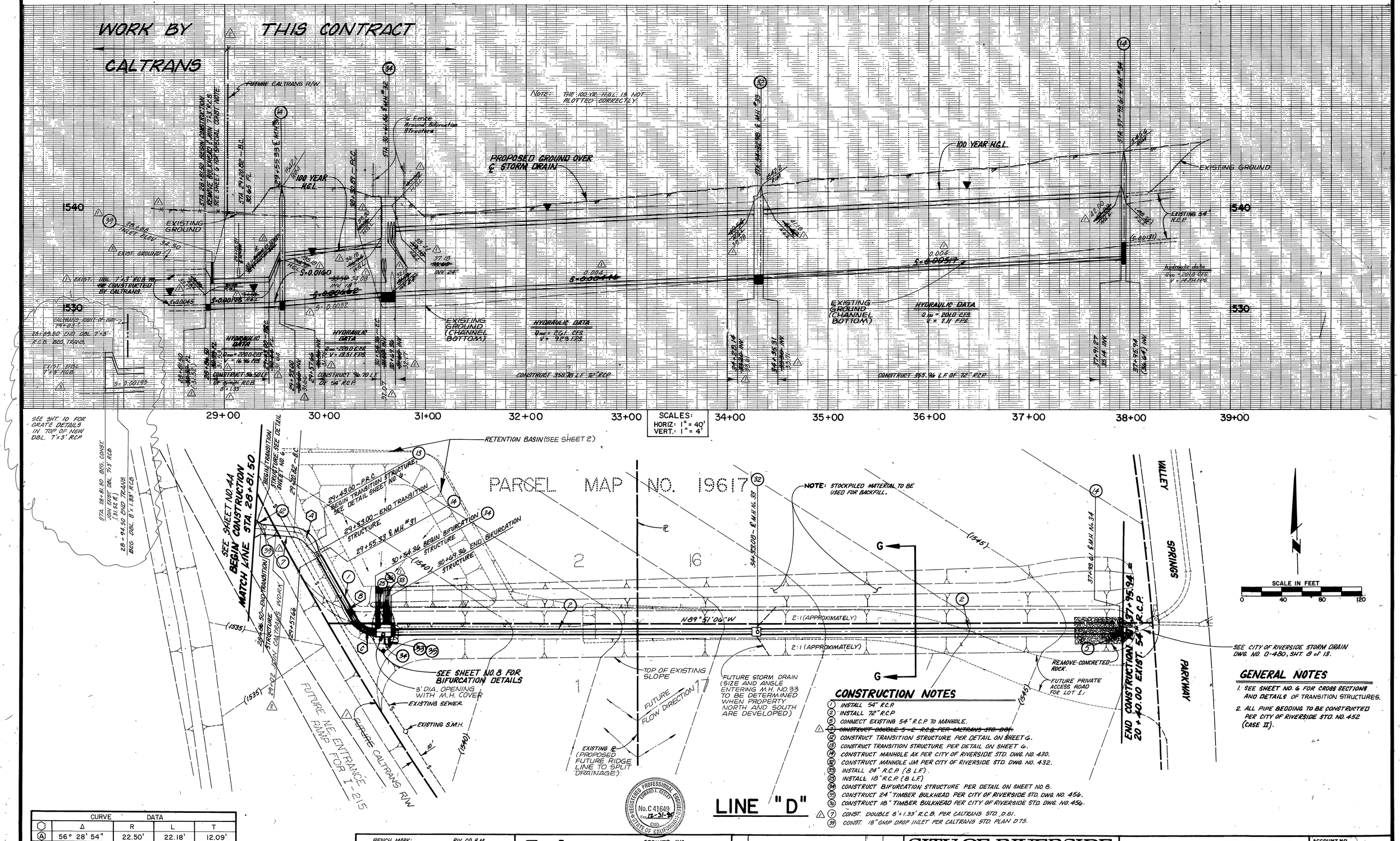

CONSTRUCTION NOTES

1. INSTALL 54" R.C.P.
2. INSTALL 72" R.C.P.
5. CONNECT EXISTING 54" R.C.P. TO MANHOLE.
6. ~~CONSTRUCT DOUBLE 5'x2' R.C.B. PER CALTRANS STD. D81.~~
12. CONSTRUCT TRANSITION STRUCTURE PER DETAIL ON SHEET G.
13. CONSTRUCT TRANSITION STRUCTURE PER DETAIL ON SHEET G.
14. CONSTRUCT MANHOLE AK PER CITY OF RIVERSIDE STD. DWG. NO. 430.
32. CONSTRUCT MANHOLE JM PER CITY OF RIVERSIDE STD. DWG. NO. 432.
33. INSTALL 24" R.C.P. (8 L.F.).
35. INSTALL 18" R.C.P. (8 L.F.)
34. CONSTRUCT BIFURCATION STRUCTURE PER DETAIL ON SHEET NO. 8.
35. CONSTRUCT 24" TIMBER BULKHEAD PER CITY OF RIVERSIDE STD. DWG. NO. 456.
36. CONSTRUCT 18" TIMBER BULKHEAD PER CITY OF RIVERSIDE STD. DWG. NO. 456.
7. CONST. DOUBLE 8'x1.33' R.C.B. PER CALTRANS STD. D.81.
39. CONST. 18" GMP DROP INLET PER CALTRANS STD. PLAN D75.

GENERAL NOTES

1. SEE SHEET NO. 6 FOR CROSS SECTIONS AND DETAILS OF TRANSITION STRUCTURES.
2. ALL PIPE BEDDING TO BE CONSTRUCTED PER CITY OF RIVERSIDE STD. NO. 452 (CASE II).

CURVE DATA				
	Δ	R	L	T
A	56° 28' 54"	22.50'	22.18'	12.09'
B	01° 42' 15"	2955.00'	87.89'	43.95'
C	59° 45' 54"	22.50'	23.47'	12.93'

REGISTERED PROFESSIONAL ENGINEER EDWARD L. RESLEY No. C 41649 Exp. 12-31-91 CIVIL STATE OF CALIFORNIA

BENCH MARK: RIV. CO. B.M.

BRASS DISK MARKED 600-47-68, IS 1.7 MILES NW ALONG THE AT & SF RAILWAY FROM THE STATION ℄ MARCH FIELD, SET BETWEEN THE TRACK AND INTERSTATE 215, 64.5' SW OF THE SW EDGE OF THE HIGHWAY, 43.6' NE OF THE NE RAIL OF TRACK, 20' SE OF POST, IRON B.M. DISK SET ON TOP OF A CONCRETE POST 0.4' ABOVE THE GROUND.

ELEVATION=1596.19

Greiner

GREINER, INC.
5225 CANYON CREST DRIVE
BUILDING 200, SUITE 253
RIVERSIDE, CA. 92507-6323
(714) 780-7746
FAX: (714) 785-5002

PLANS PREPARED UNDER THE DIRECTION OF: Edward L. Resley EDWARD L. RESLEY

EXPIRATION DATE: 12-31-91 R.C.E. NO. 41649 DATE: 1-29-92

MARK	REVISIONS	APPR.	DATE
A	REVISED WORK PER CALTRANS		5/8/92
B	REVISED WORK CALTRANS R/W		5/8/92
1	REVISED FOR CHANGED FIELD CONDITIONS DUE TO CALTRANS CONST.		11/7/94

DESIGNED BY VT DRAWN BY T.A.G. CHECKED BY M.B.S.

CITY OF RIVERSIDE
PUBLIC WORKS DEPARTMENT

APPROVED BY	DATE	BY
PRINCIPAL ENGINEER	3/25/91	
PARK DEPARTMENT		
TRAFFIC DIVISION		
CHIEF P. W. ENGINEER	4/10/92	
	4/10/92	

APPROVED BY
PUBLIC WORKS DIRECTOR
DATE 4-10-92

DRAINAGE PLAN AND PROFILE
CANYON SPRINGS ASSESSMENT DISTRICT
STA. 28+81.54 TO STA. 37+95.94
LINE "D"

HORIZ. SCALE: 1" = 40' VERT. SCALE: 1" = 4'

ACCOUNT NO.
D-595
SHEET 5A OF 10

INDEXED 2/5/96 4H

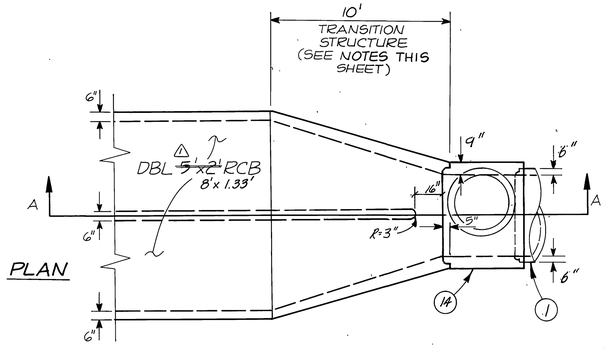

(13) TRANSITION STRUCTURE (SEE SHEET 5A)

(54" RCP TO DBL ~~5'x2'~~ RCB 8'x 1.33')

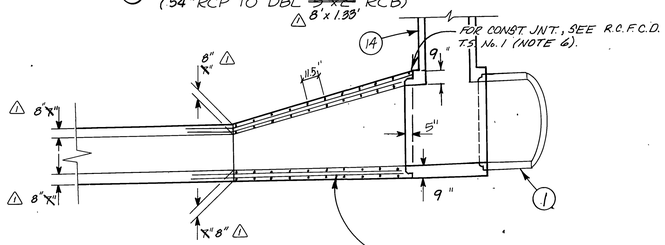

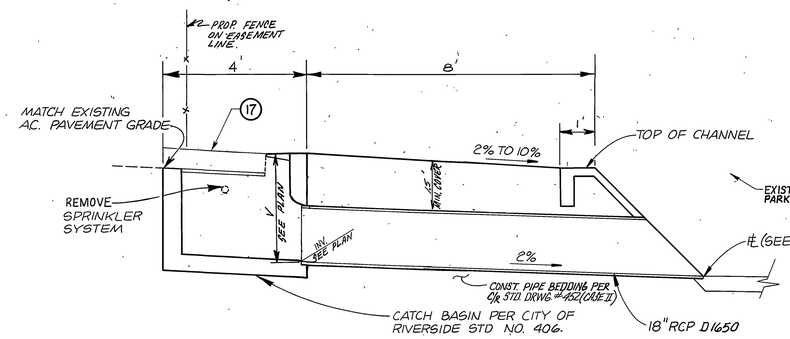

TYPICAL LATERAL DRAINAGE TO CHANNEL PROFILE (See sheet 3A & 4A)

N.T.S.

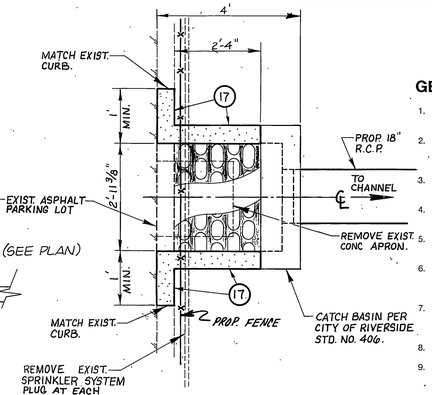

CATCH BASIN PLAN

SEE SHEET 3A
N.T.S.

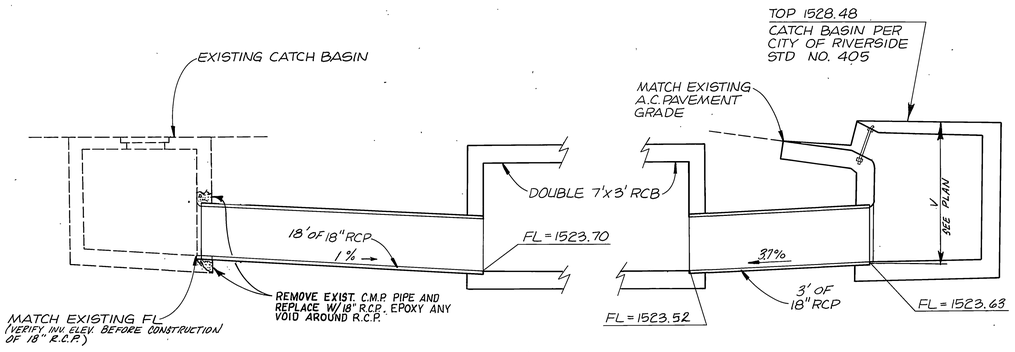

LATERAL DRAINAGE TO 7'x3' RCB PROFILE

(See sheet 3A)
N.T.S.

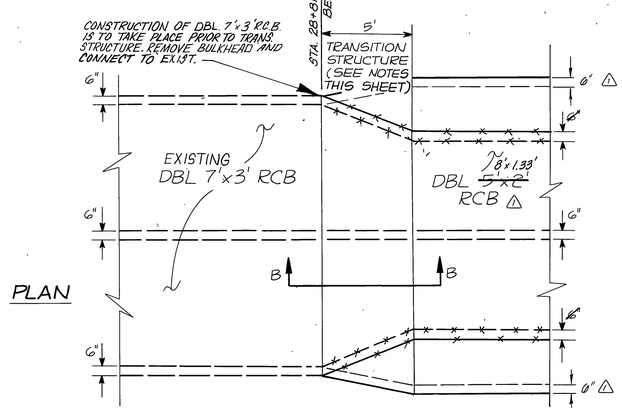

(12) TRANSITION STRUCTURE (SEE SHEET 5A)

(DBL ~~5'x2'~~ RCB TO DBL 7'x3' RCB)
8'x 1.33'

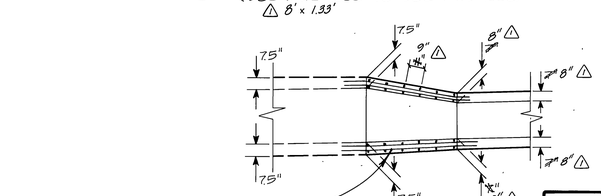

SECTION B-B

SCALE 1"=4'

CONSTRUCTION NOTES:

(1) INSTALL 54" R.C.P., .800D

~~(4) CONSTRUCT CATCH BASIN WITH 18" R.C.P. PER CITY OF RIVESIDE STD. DWG. NO. 406.~~

(12) CONSTRUCT TRANSITION STRUCTURE PER DETAIL HEREON.

(13) CONSTRUCT TRANSITION STRUCTURE PER DETAIL HEREON.

(14) CONSTRUCT MANHOLE AX PER CITY OF RIVERSIDE STD. NO. 430.

(17) CONSTRUCT 6" CURB (TYPE II) PER CITY OF RIVERSIDE STD. NO. 200.

NOTE: CONTRACTOR TO FILL & COMPACT EXIST CHANNEL TO FINISHED GRADE PRIOR TO PIPE CONSTRUCTION.

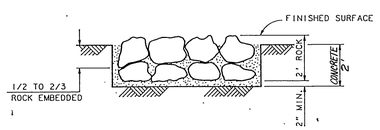

CONCRETED ROCK DETAIL

N.T.S.

NOTES:

1. ROCK FOR **CONCRETED ROCK** SHALL BE RIVER RUN ROCK. THE SMALLEST DIMENSION SHALL EXCEED 4 INCHES AND THE LARGEST DIMENSION SHALL NOT EXCEED 18 INCHES.
2. THERE SHALL BE A **CONC.** BED OF AT LEAST 2 INCHES BENEATH THE ROCK. ALL VOIDS BETWEEN THE ROCKS SHALL BE FILLED WITH **CONC.**
3. SURFACE ROCKS SHALL BE EMBEDDED FROM 1/2 TO 2/3 THEIR MAXIMUM DIMENSION.

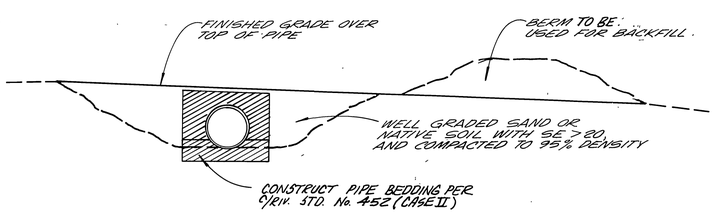

TYPICAL SECTION G-G

STA. 29+57.33 TO STA. 37+91.61
N.T.S.
(SEE SHEET 5A)

GENERAL STRUCTURAL NOTES

1. DIMENSIONS FROM FACE OF CONCRETE TO STEEL ARE TO CENTER OF BAR AND SHALL BE TWO INCHES UNLESS OTHERWISE SHOWN.
2. CONCRETE DIMENSIONS SHALL BE MEASURED HORIZONTALLY OR VERTICALLY ON THE PROFILE, AND PARALLEL TO OR AT RIGHT ANGLES (OR RADIALLY) TO CENTERLINE OF CONDUIT ON THE PLAN EXCEPT AS OTHERWISE SHOWN.
3. ALL BAR BENDS AND HOOKS SHALL CONFORM TO THE AMERICAN CONCRETE INSTITUTE'S "BUILDING CODE REQUIREMENTS FOR REINFORCED CONCRETE", 1989 EDITION, SECTION 7.3.
4. PLACING OF REINFORCEMENT SHALL CONFORM TO THE AMERICAN CONCRETE INSTITUTE'S "BUILDING CODE REQUIREMENTS FOR REINFORCED CONCRETE", 1989 EDITION.
5. TRANSVERSE CONSTRUCTION JOINTS SHALL NOT BE PLACED WITHIN 30 INCHES OF MANHOLE OR JUNCTION STRUCTURE OPENINGS.
6. TRANSVERSE CONSTRUCTION JOINTS IN WALLS AND SLABS SHALL BE IN THE SAME PLANE. NO STAGGERING OF JOINTS WILL BE PERMITTED. TRANSVERSE CONSTRUCTION JOINTS SHALL BE NORMAL OR RADIAL TO THE CENTERLINE OF CONSTRUCTION.
7. THE TRANSVERSE REINFORCING STEEL SHALL TERMINATE ONE AND ONE-HALF INCHES FROM THE CONCRETE SURFACES UNLESS OTHERWISE SHOWN ON THE STRUCTURAL DETAILS.
8. EXPOSED EDGES OF CONCRETE MEMBERS SHALL BE ROUNDED OR BEVELED.
9. NO SPLICES IN TRANSVERSE STEEL REINFORCEMENT WILL BE PERMITTED OTHER THAN SHOWN ON THE DRAWING WITHOUT APPROVAL OF THE ENGINEER. NO MORE THAN TWO SPLICES WILL BE PERMITTED IN ANY LONGITUDINAL BAR BETWEEN TRANSVERSE JOINTS. SPLICES SHALL BE STAGGERED.
10. LONGITUDINAL STEEL SHALL BE LAPPED 20 BAR DIAMETERS AT SPLICES. TRANSVERSE STEEL SHALL BE LAPPED 30 BAR DIAMETERS AT SPLICES.
11. LONGITUDINAL STEEL SHALL BE CONTINUOUS AND EXTEND THROUGH ALL CONSTRUCTION JOINTS.
12. UNLESS OTHERWISE SHOWN ON THE DRAWINGS, TRANSVERSE JOINT KEYWAYS (IN SLABS AND WALLS), AS DETAILED FOR LONGITUDINAL KEYWAYS AT THE BASE OF THE WALLS, SHALL BE PLACED AT THE END OF EACH POUR, BUT THE SPACING THEREOF SHALL NOT EXCEED 50 FEET OR BE LESS THAN 10 FEET. ALL CONSTRUCTION JOINTS IN BOTTOM SLAB, TOP SLAB, AND SIDE WALLS SHALL BE IN THE SAME PLANE. NO STAGGERING OF JOINTS WILL BE PERMITTED.
13. UNLESS OTHERWISE SHOWN ON THE DETAILS, IN CURVED SECTIONS TRANSVERSE BARS SHALL BE PLACED RADIALLY. STRAIGHT TRANSVERSE BARS IN TOP AND BOTTOM SLABS SHALL BE SPACED AS SHOWN ON THE TYPICAL SECTIONS; SPACING SHALL BE AT THE CENTERLINE OF THE BARREL ON THE OUTSIDE OF THE CURVE FOR DOUBLE BARREL BOXES. STRAIGHT BARS AND L-BARS IN WALLS SHALL BE SPACED AS SHOWN ON THE TYPICAL SECTIONS, WITH THE SPACING MEASURED BETWEEN THE VERTICAL LEGS OF BARS.
14. AT THE BEGINNING AND ENDING OF ALL POURS, A CURTAIN OF REINFORCEMENT BARS SHALL BE PLACED THREE INCHES FROM THE TRANSVERSE CONSTRUCTION JOINT.
15. THE VERTICAL WALL STEEL IN INTERIOR WALLS AND IN THE INTERIOR FACE OF EXTERIOR WALLS MAY BE SPLICED AT THE CONSTRUCTION JOINT AT THE BASE OF THE WALL. THE SPLICES SHALL BE 20 BAR DIAMETERS IN LENGTH.
16. CONCRETE QUANTITIES ARE BASED ON A SIX-BY-SIX INCH FILLET AND THE STEEL QUANTITIES DO NOT INCLUDE ANY OPTIONAL SPLICES.
17. IF WALL THICKNESS IS SIX INCHES, PLACE REINFORCEMENT AT THE CENTERLINE OF THE WALL.
18. THE DESIGN OF BOX SECTIONS IDENTIFIED BY A NUMERICAL VALUE ONLY IS BASED ON A WIDTH OF TRENCH EQUAL TO THE OUTSIDE WIDTH OF THE CONDUIT PLUS 3 FEET. WHEN THE COVER IS EQUAL TO 10 FEET OR LESS THE TRENCH WIDTH IS UNRESTRICTED. WHEN THE COVER IS GREATER THAN THE OUTSIDE WIDTH OF THE CONDUIT PLUS 3 FEET FOR A DISTANCE IN EXCESS OF 10 FEET AN ALTERNATE SECTION SHALL BE USED AS INDICATED BELOW:
    - A. WHEN THE DEPTH OF COVER IS LESS THAN 18 FEET, SECTIONS WITH THE SUFFIX "B" SHALL BE USED.
    - B. WHEN THE DEPTH OF COVER IS GREATER THAN 18 FEET AND;
        - 1. THE TRENCH WIDTH IS LESS THAN THE OUTSIDE WIDTH OF THE CONDUIT PLUS 6 FEET, SECTIONS WITH SUFFIX "A" SHALL BE USED.
        - 2. THE TRENCH IS GREATER THAN THE OUTSIDE WIDTH OF CONDUIT PLUS 6 FEET, SECTIONS WITH THE SUFFIX "B" SHALL BE USED.
19. STEPS SHALL BE 3/4" ROUND GALVANIZED STEEL ANCHORED NOT LESS THAN 6" IN WALLS OF STRUCTURE AND UNLESS OTHERWISE SHOWN SHALL BE SPACED A MAXIMUM OF 16" ON CENTERS. THE LOWEST STEP SHALL BE NOT MORE THAN 2 FEET ABOVE THE FLOWLINE.

TRANSITION STRUCTURE NOTES

1. REINFORCING STEEL BAR SIZE, SPACING. LENGTHS, AND OUTSIDE COVER SHALL BE THAT OF WHICHEVER ADJOINING BOX SECTION PROVIDED THE GREATER STEEL AREA FOR EACH TYPE OF BAR. LONGITUDINAL BARS SHALL BE CONTINUED THROUGH THE JOINTS WITH THE TRANSITION STRUCTURE.
2. THE THICKNESSES OF THE WALLS AND SLABS SHALL BE THOSE OF THE ADJOINING BOX SECTION OF EACH END OF THE TRANSITION AND SHALL VARY UNIFORMLY BETWEEN THE TWO ENDS.
3. FC = 3250 P.S.I. AT 28 DAYS.
4. STRUCTURAL CONCRETE SHALL BE CLASS 560-B-3250 FOR INVERT AND CLASS 560-C-3250 FOR WALLS AND DECK.
5. TRANSVERSE JOINT KEYWAYS, AS DETAILED FOR LONGITUDINAL JOINT KEYWAYS AT BASE OF OUTER WALLS ON THE PROJECT DRAWINGS, SHALL BE PLACED IN BOTH SLABS AND WALLS AT THE END OF EACH POUR.
6. THE TRANSITION STRUCTURE SHALL BE CONSTRUCTED IN ACCORDANCE WITH THE GENERAL STRUCTURAL NOTES APPLYING TO BOX STRUCTURES SHOWN ON THE PROJECT DRAWINGS.
7. REINFORCING STEEL BAR SIZES/SPACING, PATTERN AND COVER OVER THE STEEL SHALL BE BOX TO PIPE THAT OF BOX SECTION.. THE BAR LENGTHS SHALL VARY UNIFORMLY THROUGHOUT THE TRANSITION.
8. THE CONCRETE THICKNESS SHALL BE AS FOLLOWS:
   BOX TO PIPE THAT OF ARCH OR BOX SECTION UNLESS THE WALL THICKNESS OF THE PIPE PLUS 4 INCHES IS GREATER, IN WHICH CASE THE CONCRETE THICKNESS SHALL VARY UNIFORMLY FROM THAT OF THE ARCH OR BOX SECTION TO THAT OF THE PIPE WALL PLUS 4 INCHES.
9. THE INTERIOR SURFACE SHALL BE SMOOTH AND VARY UNIFORMLY BETWEEN THE TWO ADJOINING SECTIONS.
10. KEYED CONSTRUCTION JOINTS OF THE SAME DIMENSIONS AS THOSE OF THE BOX SECTION MAY BE CARRIED THROUGH THE TRANSITION STRUCTURE AT THE CONTRACTOR'S OPTION IN ACCORDANCE WITH THE GENERAL STRUCTURES SHOWN ON THE PROJECT.

REGISTERED PROFESSIONAL ENGINEER EDWARD L. RESLEY No. C 41649 Exp. 12-31-95 CIVIL STATE OF CALIFORNIA

BENCH MARK: RIV. CO.:B.M.

BRASS DISK MARKED 600-47-68, IS 1.7 MILES NW ALONG THE AT & SF RAILWAY FROM THE STATION @ MARCH FIELD, SET BETWEEN THE TRACK AND INTERSTATE 215, 64.5' SW OF THE SW EDGE OF THE HIGHWAY, 43.6' NE OF THE NE RAIL OF TRACK, 20' SE OF POST, IRON B.M. DISK SET ON TOP OF A CONCRETE POST 0.4' ABOVE THE GROUND.

ELEVATION = 1536.119

Greiner

Greiner, Inc.
5225 Canyon Crest Drive
Building 200, Suite 253
Riverside, California 92507-6323
(714) 788-7746
FAX: (714) 788-5002

PLANS PREPARED UNDER THE DIRECTION OF: EDWARD L. RESLEY

EXPIRATION DATE: 12-31-95 R.C.E. NO. 41649 DATE 1-29-92

MARK	REVISIONS	APPR.	DATE
1	REVISED FOR CHANGE FIELD CONDITIONS DUE TO CALTRANS CONST.		4/16/92

DESIGNED BY V.T. DRAWN BY R.D.N. CHECKED BY M.G.S.

CITY OF RIVERSIDE
PUBLIC WORKS DEPARTMENT

APPROVED BY	DATE	BY
PRINCIPAL ENGINEER	3/27/92	
PARK DEPARTMENT	—	—
TRAFFIC DIVISION	—	—
CHIEF P. W. ENGINEER	4/16/92	

APPROVED BY

PUBLIC WORKS DIRECTOR

DATE 4/16/92

DRAINAGE PLAN AND PROFILE

CANYON SPRINGS ASSESSMENT DISTRICT

DETAIL SHEET

ACCOUNT NO. D - 595

SHEET 6 OF 10

INDEXED 2/5/96 GH

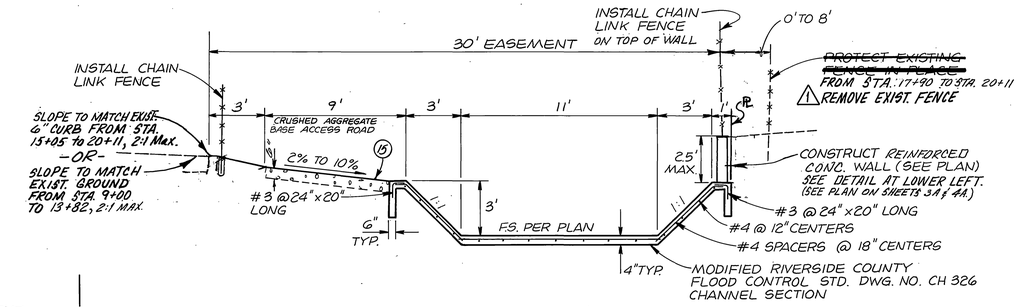

STA. 9+20.00 TO STA. 13+82.84
STA. 15+20.32 TO STA. 20+11.15

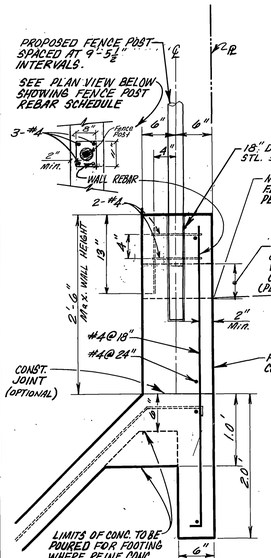

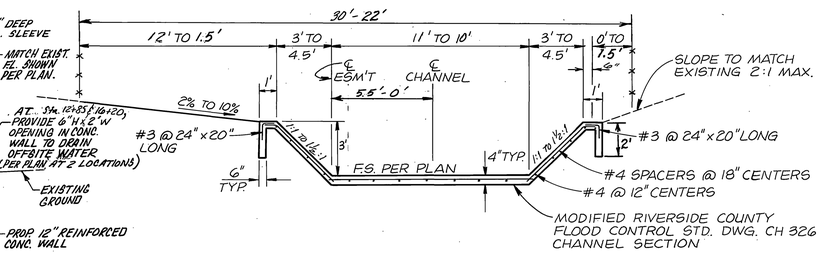

STA. 20+11.15 TO STA. 20+31.00

REINFORCED CONC. WALL DETAIL
Scale: 1" = 1'
Sta. 9+20.00 to Sta. 13+82.84
AND
Sta. 15+20.32 to Sta. 20+11.15

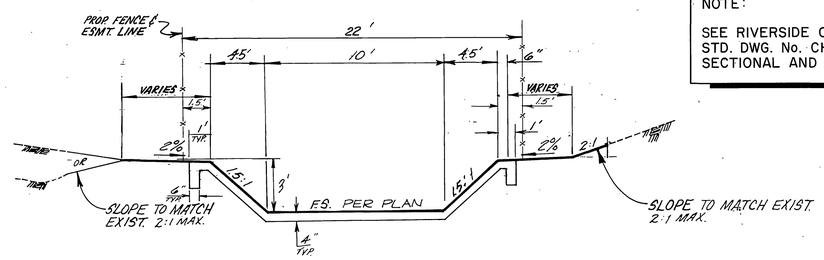

STA. 20+31.00 TO STA. 20+73.15

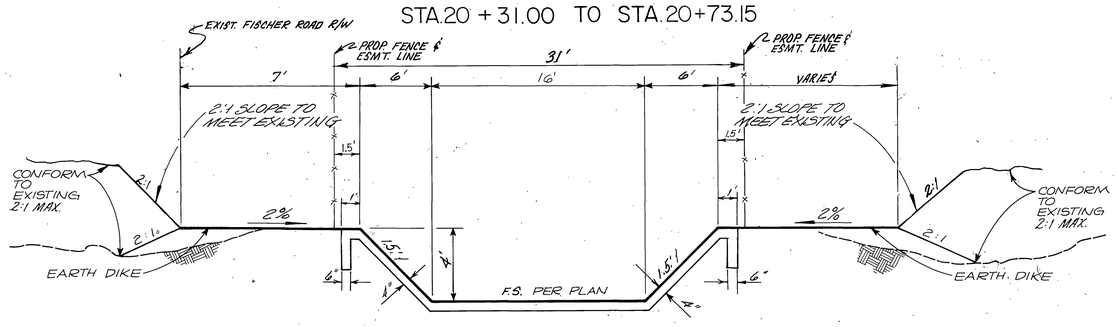

STA 21+56.15 TO STA 25+18.79

NOTE:

SEE RIVERSIDE COUNTY FLOOD CONTROL STD. DWG. No. CH 326 FOR CHANNEL SECTIONAL AND REINFORCEMENT DETAILS.

TYPICAL CHANNEL SECTIONS LINE "D" (N.T.S.)

NOTE:

1. SEE CALTRANS STD. PLAN D86-A FOR BOX CULVERT WARPED WING WALL SECTION AND REINFORCEMENT DETAILS.
2. SEE CALTRANS STD. PLAN D81 FOR BOX CULVERT SECTIONAL AND REINFORCEMENT DETAILS.

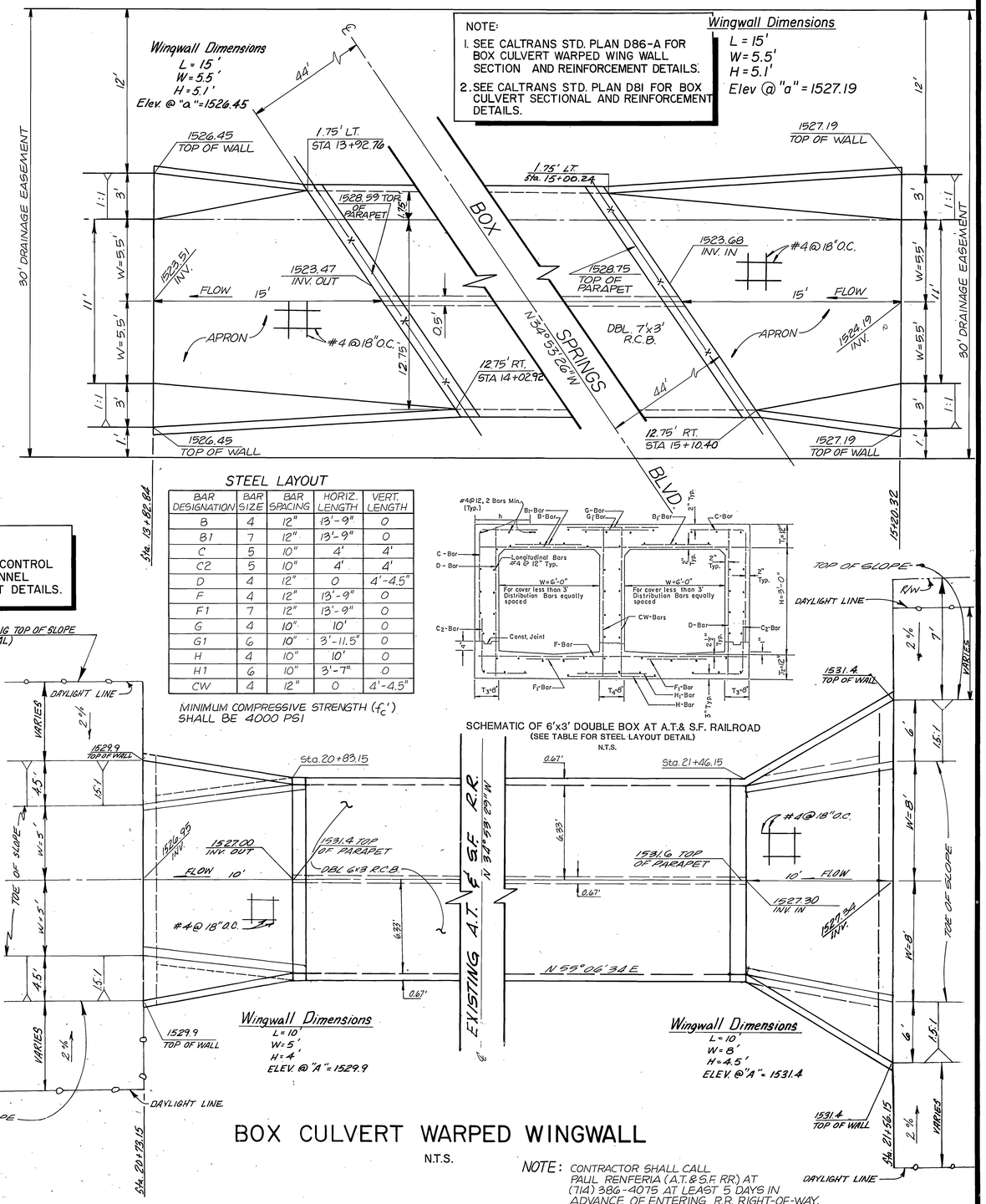

STEEL LAYOUT

BAR DESIGNATION	BAR SIZE	BAR SPACING	HORIZ. LENGTH	VERT. LENGTH
B	4	12"	13'-9"	0
B1	7	12"	13'-9"	0
C	5	10"	4'	4'
C2	5	10"	4'	4'
D	4	12"	0	4'-4.5"
F	4	12"	13'-9"	0
F1	7	12"	13'-9"	0
G	4	10"	10'	0
G1	6	10"	3'-11.5"	0
H	4	10"	10'	0
H1	6	10"	3'-7"	0
CW	4	12"	0	4'-4.5"

MINIMUM COMPRESSIVE STRENGTH (f_c') SHALL BE 4000 PSI

SCHEMATIC OF 6'x3' DOUBLE BOX AT A.T.& S.F. RAILROAD
(SEE TABLE FOR STEEL LAYOUT DETAIL)
N.T.S.

BOX CULVERT WARPED WINGWALL

N.T.S.

NOTE: CONTRACTOR SHALL CALL PAUL RENFERIA (A.T.&S.F. RR) AT (714) 386-4075 AT LEAST 5 DAYS IN ADVANCE OF ENTERING R.R. RIGHT-OF-WAY.

REGISTERED PROFESSIONAL ENGINEER EDWARD L. RESLEY No. C 41649 Exp. 12-31-95 CIVIL STATE OF CALIFORNIA

BENCH MARK: RIV. CO.:B.M.

BRASS DISK MARKED 600-47-68, IS 1.7 MILES NW ALONG THE AT & SF RAILWAY FROM THE STATION @ MARCH FIELD, SET BETWEEN THE TRACK AND INTERSTATE 215, 64.5' SW OF THE SW EDGE OF THE HIGHWAY, 43.6' NE OF THE NE RAIL OF TRACK, 20' SE OF POST, IRON B.M. DISK SET ON TOP OF A CONCRETE POST 0.4' ABOVE THE GROUND.

ELEVATION = 1536.119

Greiner

Greiner, Inc.
5225 Canyon Crest Drive
Building 200, Suite 253
Riverside, California 92507-6323
(714) 788-7746
FAX: (714) 788-5002

PLANS PREPARED UNDER THE DIRECTION OF: Edward L. Resley — EDWARD L. RESLEY

EXPIRATION DATE: 12-31-95 R.C.E. NO. 41649 DATE: 1-27-92

MARK	REVISIONS	APPR.	DATE
1	REVISED FENCE REMOVAL LIMITS		4/16/92

DESIGNED BY V.T. DRAWN BY R.D.N. CHECKED BY M.G.G.

CITY OF RIVERSIDE
PUBLIC WORKS DEPARTMENT

APPROVED BY	DATE	BY
PRINCIPAL ENGINEER	3/25/92	
PARK DEPARTMENT		
TRAFFIC DIVISION		
CHIEF P. W. ENGINEER	4/16/92	MJG
	4/16/92	WLC

APPROVED BY: Dan Bel
PUBLIC WORKS DIRECTOR
DATE 4/16/92

DRAINAGE PLAN AND PROFILE
CANYON SPRINGS ASSESSMENT DISTRICT
DETAIL SHEET

ACCOUNT NO. D-595
SHEET 7A OF 10

INDEXED 2/5/95 GH

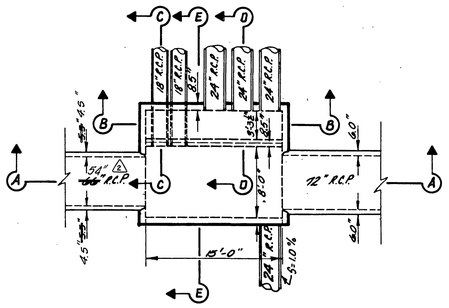

PLAN

SCALE: 1"=8'

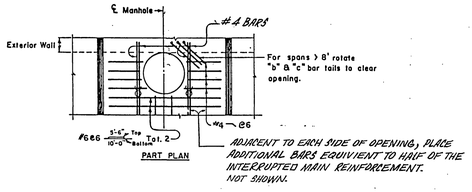

PART PLAN

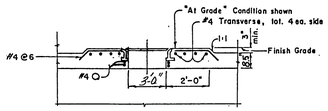

PART LONGITUDINAL SECTION

MANHOLE DETAILS

N.T.S.

GENERAL STRUCTURAL NOTES

1. DIMENSIONS FROM FACE OF CONCRETE TO STEEL ARE TO CENTER OF BAR AND SHALL BE TWO INCHES UNLESS OTHERWISE SHOWN.
2. CONCRETE DIMENSIONS SHALL BE MEASURED HORIZONTALLY OR VERTICALLY ON THE PROFILE, AND PARALLEL TO OR AT RIGHT ANGLES (OR RADIALLY) TO CENTERLINE OF CONDUIT ON THE PLAN EXCEPT AS OTHERWISE SHOWN.
3. ALL BAR BENDS AND HOOKS SHALL CONFORM TO THE AMERICAN CONCRETE INSTITUTE'S "BUILDING CODE REQUIREMENTS FOR REINFORCED CONCRETE", 1989 EDITION, SECTION 7.3.
4. PLACING OF REINFORCEMENT SHALL CONFORM TO THE AMERICAN CONCRETE INSTITUTE'S "BUILDING CODE REQUIREMENTS FOR REINFORCED CONCRETE", 1989 EDITION.
5. TRANSVERSE CONSTRUCTION JOINTS SHALL NOT BE PLACED WITHIN 30 INCHES OF MANHOLE OR JUNCTION STRUCTURE OPENINGS.
6. TRANSVERSE CONSTRUCTION JOINTS IN WALLS AND SLABS SHALL BE IN THE SAME PLANE. NO STAGGERING OF JOINTS WILL BE PERMITTED. TRANSVERSE CONSTRUCTION JOINTS SHALL BE NORMAL OR RADIAL TO THE CENTERLINE OF CONSTRUCTION.
7. THE TRANSVERSE REINFORCING STEEL SHALL TERMINATE ONE AND ONE-HALF INCHES FROM THE CONCRETE SURFACES UNLESS OTHERWISE SHOWN ON THE STRUCTURAL DETAILS.
8. EXPOSED EDGES OF CONCRETE MEMBERS SHALL BE ROUNDED OR BEVELED.
9. NO SPLICES IN TRANSVERSE STEEL REINFORCEMENT WILL BE PERMITTED OTHER THAN SHOWN ON THE DRAWING WITHOUT APPROVAL OF THE ENGINEER. NO MORE THAN TWO SPLICES WILL BE PERMITTED IN ANY LONGITUDINAL BAR BETWEEN TRANSVERSE JOINTS. SPLICES SHALL BE STAGGERED.
10. LONGITUDINAL STEEL SHALL BE LAPPED 20 BAR DIAMETERS AT SPLICES. TRANSVERSE STEEL SHALL BE LAPPED 30 BAR DIAMETERS AT SPLICES.
11. LONGITUDINAL STEEL SHALL BE CONTINUOUS AND EXTEND THROUGH ALL CONSTRUCTION JOINTS.

Note: Steps shall be 14" wide Stirrup type Safety Steps CAST in place at time of manufacture. Steps shall be placed a maximum of 18" C.C. Material for Steps shall be 3/4" galvanized steel, A.S.T.M. A-124.

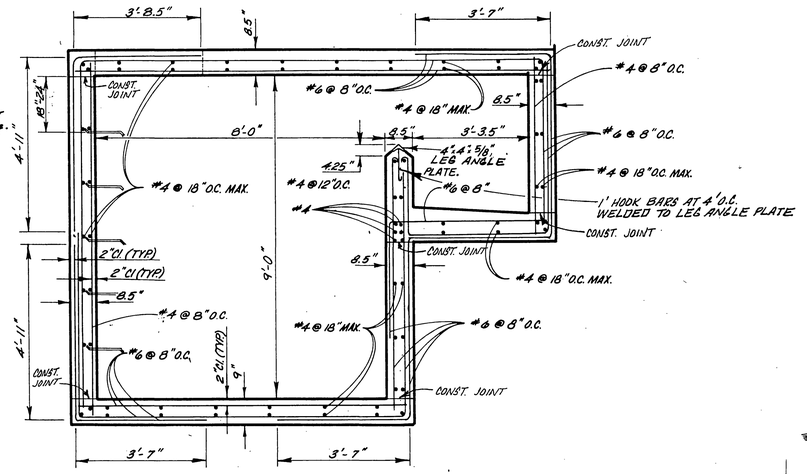

SECTION "E-E"

SCALE: 1"= 2'

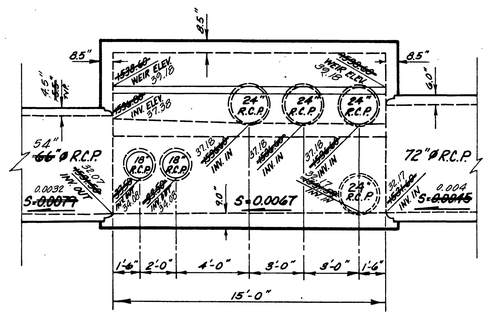

SECTION "A-A"

SCALE: 1"=4'

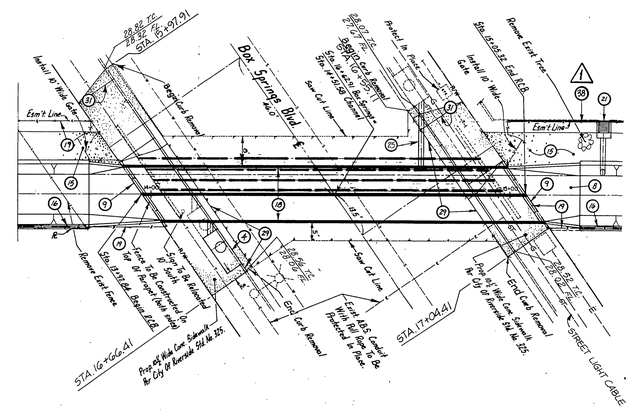
Box Springs Blvd
Bridge Rail
Sawcut Line
Cut Line
Fill Line
Remove Fence
Remove Cast Iron
Sta. 17+04.41
Sta. 16+66.41
Street Light Cable
Existing Cast Iron Culvert
Existing Cast Iron Culvert
Existing Cast Iron Culvert

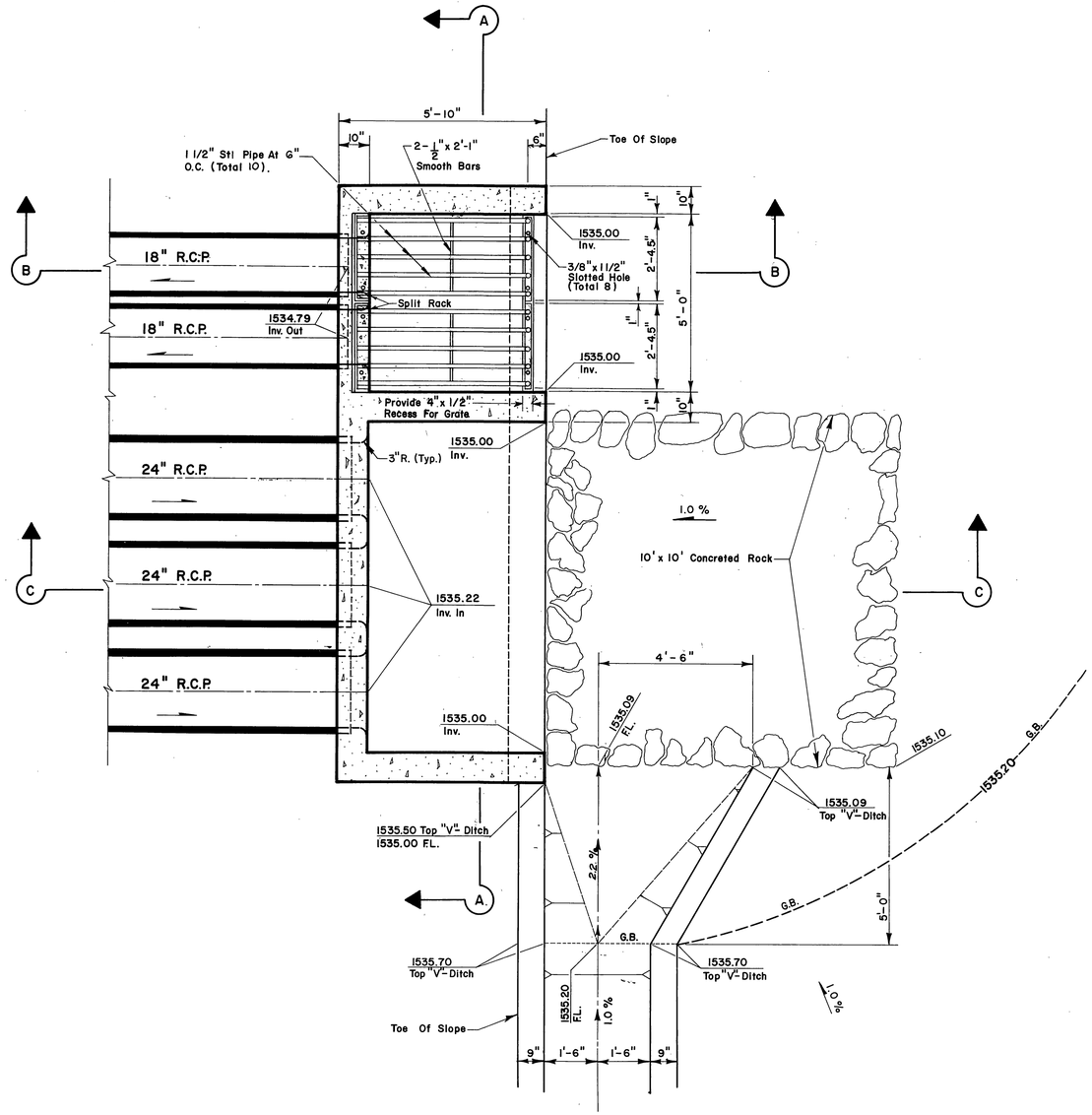

Plan View

Retention Basin Inlet And Outlet Structure

Scale: 1"=2'

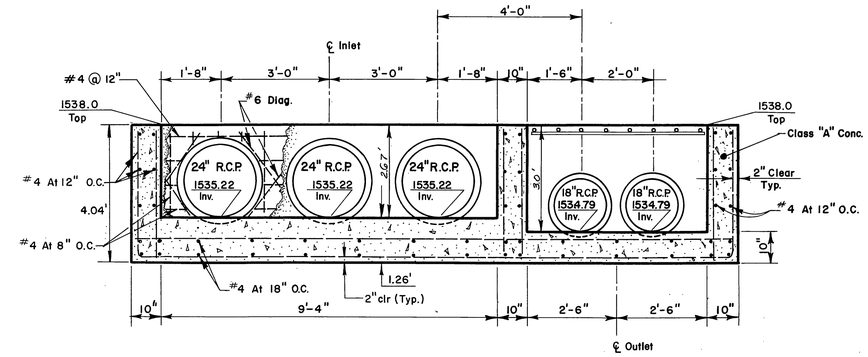

Section "A-A"

Basin Outlet And Inlet Structure Reinforcing Detail

Scale: 1"=2'

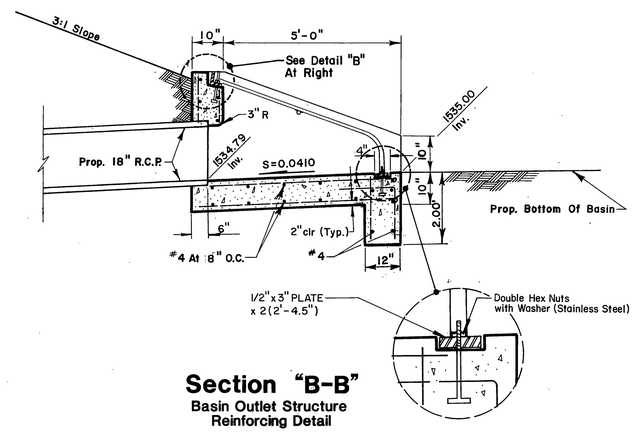

Section "B-B"

Basin Outlet Structure Reinforcing Detail

Scale: 1"=2'

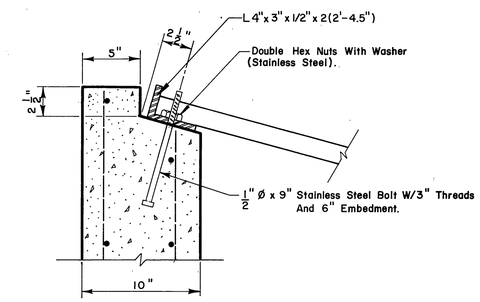

Detail "B"

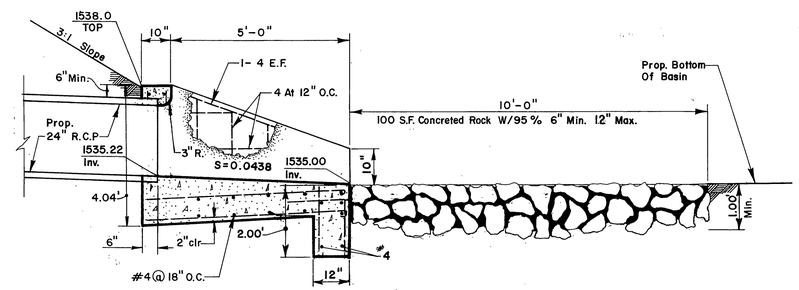

Section "C-C"

Basin Inlet Structure Reinforcing Detail

Scale: 1"=2'

NOTE:
ENTIRE GRATE TO BE GALVANIZED.

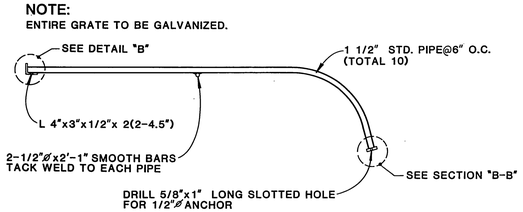

Grate Detail

N.T.S.

REGISTERED PROFESSIONAL ENGINEER
DONALD W. BERGH
NO. 28949
EXP. 3-31-95
CIVIL
STATE OF CALIFORNIA

BENCH MARK: RIV. CO.:B.M.

BRASS DISK MARKED 600-47-68, IS 1.7 MILES NW ALONG THE AT & SF RAILWAY FROM THE STATION @ MARCH FIELD, SET BETWEEN THE TRACK AND INTERSTATE 215, 64.5' SW OF THE SW EDGE OF THE HIGHWAY, 43.6' NE OF THE NE RAIL OF TRACK, 20' SE OF POST, IRON B.M. DISK SET ON TOP OF A CONCRETE POST 0.4' ABOVE THE GROUND.

ELEVATION = 1536.119

Greiner

Greiner, Inc.
5225 Canyon Crest Drive
Building 200, Suite 253
Riverside, California 92507-6323
(714)788-7746
FAX: (714)788-5002

PLANS PREPARED UNDER THE DIRECTION OF: Donald W. Bergh
DONALD W. BERGH

EXPIRATION DATE: 3-31-95 R.C.E. NO. 28949 DATE: 1-29-92

MARK	REVISIONS	APPR.	DATE

DESIGNED BY V.T. DRAWN BY T.A.G. CHECKED BY D.W.B.

CITY OF RIVERSIDE
PUBLIC WORKS DEPARTMENT

APPROVED BY	DATE	BY
PRINCIPAL ENGINEER	12/18/92	
PARK DEPARTMENT	—	—
TRAFFIC DIVISION	—	—
CHIEF F.W. ENGINEER	11/19/92	

APPROVED BY
PUBLIC WORKS DIRECTOR
DATE 11/20/92

DRAINAGE PLAN

CANYON SPRINGS ASSESSMENT DISTRICT

Retention Basin

Detail Sheet

HORIZ. SCALE: 1"= VERT. SCALE: 1"=

ACCOUNT NO. D-595

SHEET 9 OF 10

INDEXED 2/5/96 GH

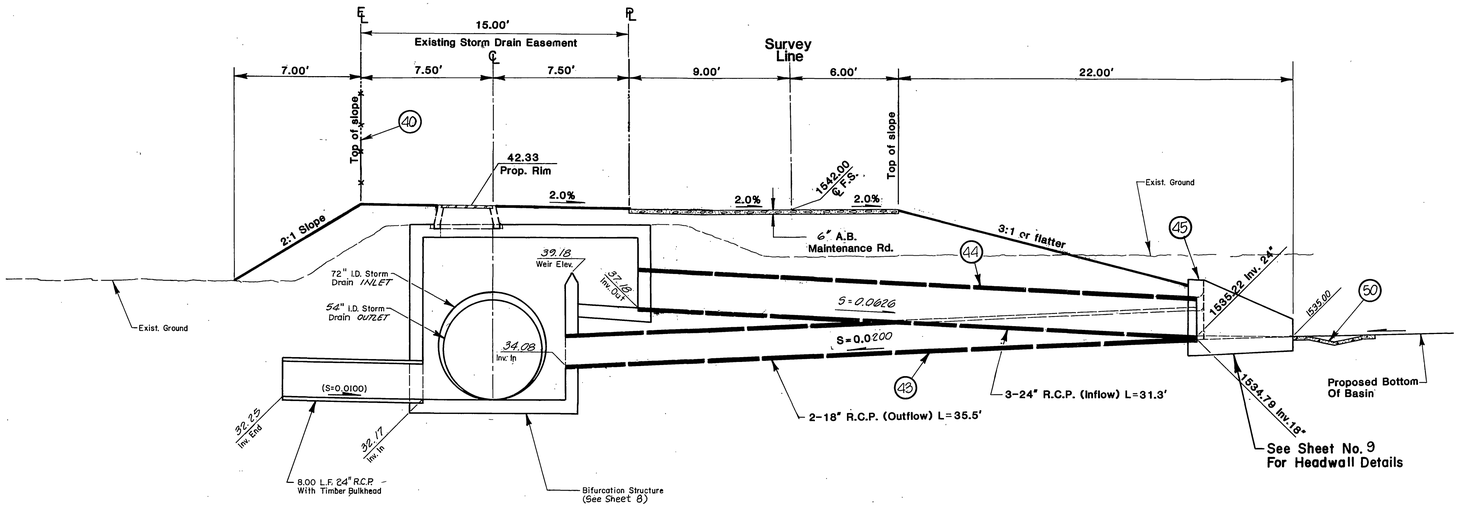

Section "D-D"

Bifurcation Connection Detail

Scale: 1"= 4'

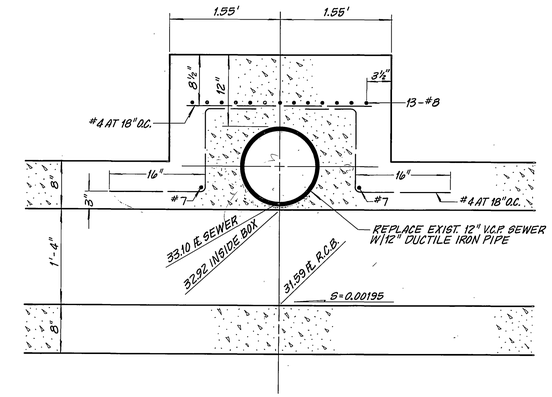

SEWER CROSSING AT DOUBLE 8'×1.33' R.C.B.

SCALE: 1" = 1'

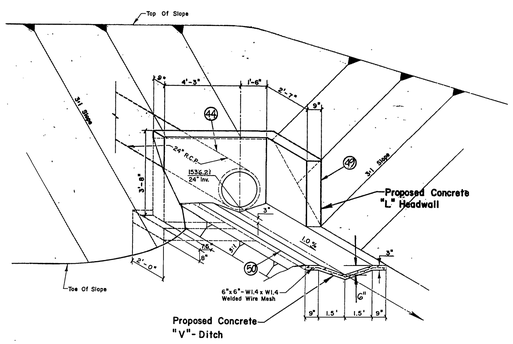

Detail "A"

"V"-Ditch And Headwall Junction Detail

N.T.S.

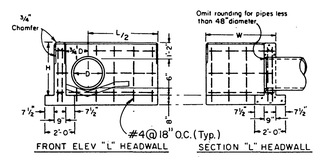

D	H	L/2	W 3'-4" Steel Lbs	W 3'-4" Conc Cu Yds
in	ft-in	ft-in		
12	2-8	2-6	50	.79
15	2-11	3-0	55	.91
18	3-2	3-6	65	1.04
21	3-5	3-9	75	1.15
24	3-8	4-3	85	1.29

"L"-Headwall Reinforcing Detail

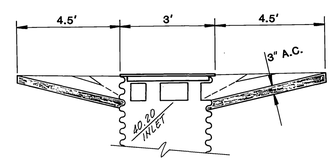

Detail C.S.P. Inlet with 3" A.C. Slope Paving

N.T.S.

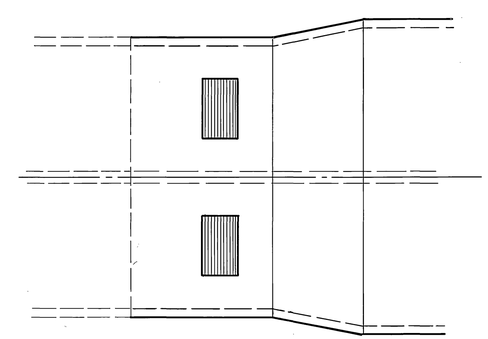

REGISTERED PROFESSIONAL ENGINEER DONALD W. BERGH NO. 28949 EXP. 3-31-95 CIVIL STATE OF CALIFORNIA

BENCH MARK: RIV. CO.:B.M.

BRASS DISK MARKED 600-47-68, IS 1.7 MILES NW ALONG THE AT & SF RAILWAY FROM THE STATION @ MARCH FIELD, SET BETWEEN THE TRACK AND INTERSTATE 215, 64.5' SW OF THE SW EDGE OF THE HIGHWAY, 43.6' NE OF THE NE RAIL OF TRACK, 20' SE OF POST, IRON B.M. DISK SET ON TOP OF A CONCRETE POST 0.4' ABOVE THE GROUND.

ELEVATION = 1536.119

Greiner

Greiner, Inc.
5225 Canyon Crest Drive
Building 200, Suite 253
Riverside, California 92507-6323
(714)788-7746
FAX: (714)788-5002

PLANS PREPARED UNDER THE DIRECTION OF: DONALD W. BERGH

EXPIRATION DATE: 3-31-95 R.C.E. NO. 28949 DATE: 1-29-92

MARK	REVISIONS	APPR.	DATE

DESIGNED BY V.T. DRAWN BY T.A.G. CHECKED BY D.W.B.

CITY OF RIVERSIDE
PUBLIC WORKS DEPARTMENT

APPROVED BY	DATE	BY
PRINCIPAL ENGINEER	3/15/91	
PARK DEPARTMENT	—	—
TRAFFIC DIVISION	—	—
CHIEF P. W. ENGINEER	11-20-91	

APPROVED BY

PUBLIC WORKS DIRECTOR

DATE 11/20/91

DRAINAGE PLAN

CANYON SPRINGS ASSESSMENT DISTRICT

Retention Basin

Detail Sheet

HORIZ. SCALE: 1" = VERT. SCALE: 1" =

ACCOUNT NO. D-595

SHEET 10 OF 10

INDEXED 2/5/96 GH