CITY OF RIVERSIDE, CALIFORNIA
STORM DRAIN PLANS
FOR
TRACT NO. 32205

GENERAL NOTES

1. NO PERSON SHALL PERFORM ANY CONSTRUCTION ACTIVITY OR INSTALL ANY OBJECTS WITHIN THE PUBLIC RIGHTS-OF-WAY OR EASEMENTS OF THE CITY OF RIVERSIDE WITHOUT A VALID CONSTRUCTION PERMIT, OR, A STREET OPENING PERMIT OR AN ENCROACHMENT PERMIT ISSUED BY THE CITY'S PUBLIC WORKS DEPARTMENT.
2. IT SHALL BE THE RESPONSIBILITY OF THE CONTRACTOR TO CLEAR THE RIGHT OF WAY IN ACCORDANCE WITH THE PROVISIONS OF LAW AS IT AFFECTS EACH UTILITY INCLUDING IRRIGATION LINES AND APPURTENANCES AND AT NO COST TO THE CITY.
3. CONSTRUCTION SHALL BE IN ACCORDANCE WITH THE CITY OF RIVERSIDE DEPARTMENT OF PUBLIC WORKS, STANDARD DRAWINGS, ITS SUPPLEMENTAL NOTES AND THE STANDARD SPECIFICATIONS FOR PUBLIC WORKS CONSTRUCTION, CURRENT EDITION.
4. THE PRIVATE ENGINEER SIGNING THESE PLANS IS RESPONSIBLE FOR ASSURING THE ACCURACY AND ACCEPTABILITY OF THE WORK HEREON. IN THE EVENT OF DISCREPANCIES ARISING DURING CONSTRUCTION, THE PRIVATE ENGINEER SHALL BE RESPONSIBLE FOR DETERMININING AN ACCEPTABLE SOLUTION AND REVISING THE PLANS FOR APPROVAL BY THE CITY.
5. QUANTITIES SHOWN ARE FOR INFORMATION ONLY AND THE CITY OF RIVERSIDE IS NOT RESPONSIBLE FOR THEIR ACCURACY.
6. THE DEVELOPER SHALL BE RESPONSIBLE FOR PRESERVING OR RE-ESTABLISHING AND REFERENCING SURVEY MONUMENTS DESTROYED, DISTURBED OR BURIED AS A RESULT OF CONSTRUCTION SHOWN HEREON.
7. ALL FLAGGED ELEVATIONS SHALL BE STAKED IN THE FIELD BY THE PRIVATE ENGINEER.
8. ANY TRAFFIC CONTROL STRIPING OBLITERATED AND/OR BADLY WORN DURING CONSTRUCTION SHALL BE RESTORED BY THE CONTRACTOR WITHIN FIVE DAYS AFTER NOTIFICATION FROM THE CITY INSPECTORS.
9. FINAL STRIPING FOR TRAFFIC CONTROL AND/OR PAVEMENT MARKING TO BE THE RESPONSIBILITY OF THE DEVELOPER.
10. THE CONTRACTOR SHALL CALL IN A LOCATION REQUEST TO UNDERGROUND SERVICE ALERT (USA), PHONE #1-800-227-2600, TWO WORKING DAYS BEFORE DIGGING. NO CONSTRUCTION PERMIT WILL BE ISSUED BY THE PUBLIC WORKS DEPARTMENT INVOLVING EXCAVATION FOR UNDERGROUND FACILITIES UNLESS THE APPLICANT HAS BEEN PROVIDED AN INQUIRY IDENTIFICATION NUMBER BY U.S.A.
11. BEFORE THE RIP-RAP AT THE OUTLET OF ANY DRAINAGE STRUCTURE IS ACCEPTED BY THE CITY, IT SHALL BE TESTED UNDER FLOWS AS CLOSE AS POSSIBLE TO DESIGN CONDITIONS WITH WATER OBTAINED FROM FIRE HYDRANTS IN THE IMMEDIATE AREA.
12. PIPE BEDDING IS TO BE CONSTRUCTED PER CITY OF RIVERSIDE STANDARD DRAWING NO. 452; CASE II.

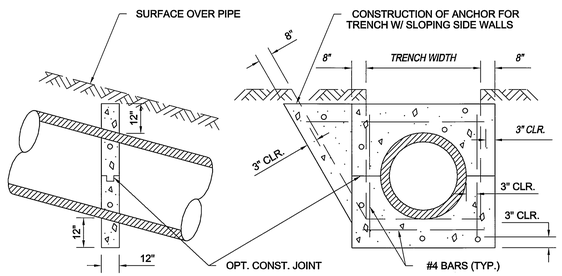

NOTES: 1. SLOPE ANCHORS SHALL BE CONSTRUCTED AT 7' VERTICAL INTERVAL ON ALL SLOPES OF 5:1 OR STEEPER.
2. CONCRETE SHALL BE CLASS 500-C-2500 CONCRETE.

30 SLOPE ANCHOR DETAIL
N.T.S.

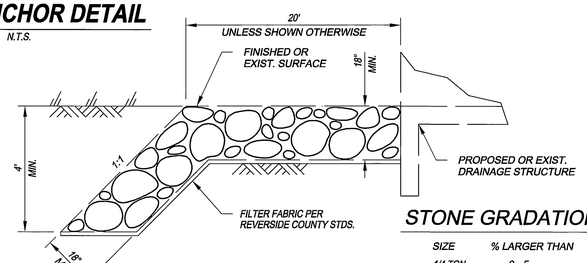

STONE GRADATION

SIZE	% LARGER THAN
1/4 TON	0 - 5
300#	50 - 100
150#	95 - 100

29 FOR LINE "B" GROUTED RIP-RAP DETAIL
N.T.S.

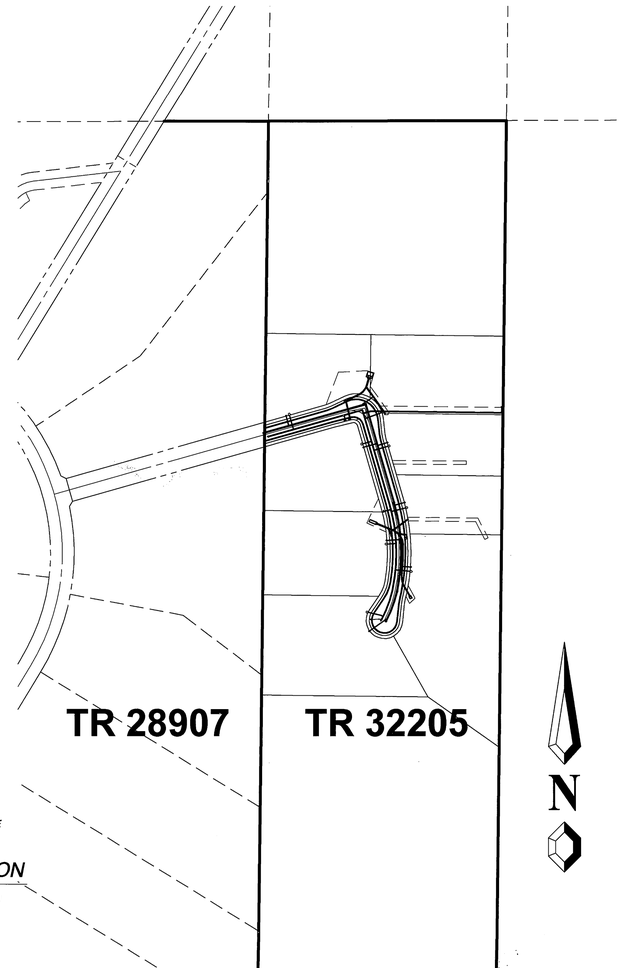

INDEX MAP
SCALE 1" = 200'

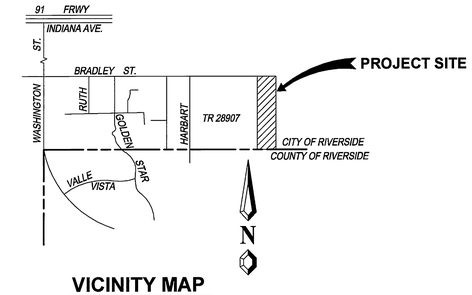

VICINITY MAP
N.T.S.

SHEET INDEX

SHEET NO.	DESCRIPTION
1	TITLE SHEET, NOTES & INDEX MAP
2	STORM DRAIN PLANS

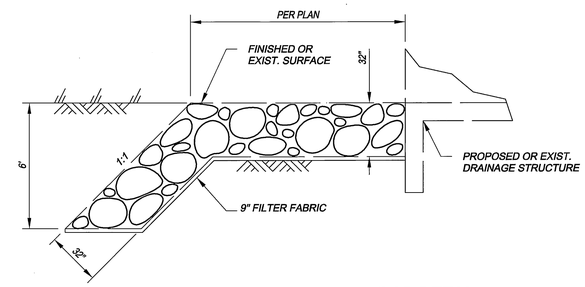

29 1/4 TON UNGROUTED RIP-RAP DETAIL
N.T.S.

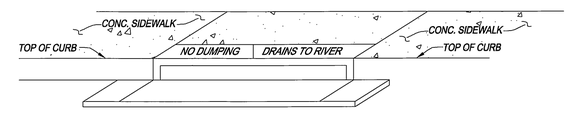

CATCH BASIN STENCHING DETAIL
N.T.S.

(A) STENCILS TO HAVE 2" LETTERS AS FOLLOWS:
NO DUMPING
DRAINS TO RIVER

(B) PLACE BOTH STENCILS CENTERD WITHIN THE CATCHBASIN OPENING AND WITHIN THE TOP OF CURB.

(C) SPRAY BOTH STENCILS WITH WHITE PAINT.

(D) REMOVE STENCILS WHEN PAINT IS DRY.

ESTIMATE OF QUANTITIES

NO.	STORM DRAIN CONSTRUCTION NOTES	QTY.	UNITS
1	INST. 18" R.C.P. (SEE PROFILE FOR D-LOAD)	458	L.F.
2	INST. 24" R.C.P. (SEE PROFILE FOR D-LOAD)	484	L.F.
20	CONST. CATCH BASIN PER CITY OF RIVERSIDE STD. DWG. NO. 405	126	EA.
21	CONST. MANHOLE EZ PER CITY OF RIVERSIDE STD. DWG. NO. 431	1	EA.
25	CONST. J.S. "B" PER CITY OF RIVERSIDE STD. DWG. NO. 421	4	EA.
26	CONST. CONCRETE COLLAR PER CITY OF RIVERSIDE STD. DWG. NO. 424	3	EA.
28	CONST INLET/OUTLET HEADWALL PER DETAIL ON SHEET NO. 2	2	EA.
29	CONST. RIP-RAP PER DETAIL ON SHEET 1	2100	SQ. FT.
30	CONST. SLOPE ANCHOR PER DETAIL HEREON	2	EA.
31	CONST. ENERGY DISSIPATOR PER APWA STD. PLAN 384-1; W=6'	1	EA.

NOTICE TO CONTRACTOR:

CONTRACTOR AGREES HE SHALL ASSUME SOLE AND COMPLETE RESPONSIBILITY FOR JOB SITE CONDITIONS DURING THE COURSE OF CONSTRUCTION OF THIS PROJECT, INCLUDING SAFETY OF ALL PERSONS AND PROPERTY. THAT THIS REQUIREMENT SHALL APPLY CONTINUOUSLY AND NOT BE LIMITED TO NORMAL WORKING HOURS: AND THAT THE CONTRACTOR SHALL DEFEND, INDEMNIFY AND HOLD THE OWNER, THE ENGINEER, AND THE CITY OF RIVERSIDE HARMLESS FROM ANY AND ALL LIABILITY, REAL OR ALLEGED, IN CONNECTION WITH THE PERFORMANCE OF WORK ON THIS PROJECT, EXCEPTING FOR LIABILITY ARISING FROM SOLE NEGLIGENCE OF OWNER, ENGINEER, OR CITY OF RIVERSIDE.

EXISTING UNDERGROUND UTILITIES ARE AS PER AVAILABLE RECORDS. THE CONTRACTOR SHALL BE RESPONSIBLE FOR VERIFYING THE ACTUAL LOCATION AND ELEVATION IN THE FIELD

BENCH MARK DESCRIPTION:

POINT ID: GPS-69
ELEVATION: 1083.685 ELEVATION: 0 ELEVATION: 0 ELEVATION: 0
DATE LVLD: 1998 DATE LVLD: 0 DATE LVLD: 0 DATE LVLD: 0
REFERENCE: LL45/69
DATUM: 1929 ADJUSTMENT YEAR: 1971
2ND ORDER POINT
DESCRIPTION:
G.P.S. POINT 69 - A 2 1/2" BRASS DISK STAMPED "CITY OF RIVERSIDE GPS STATION 69 - 1991" SET IN THE NORTH END OF A CATCH BASIN 1' EAST OF THE EAST CURB OF WASHINGTON STREET AND 3' SOUTH OF THE BCR AT THE SOUTHEAST CURB RETURN OF WASHINGTON STREET AND BRADLEY STREET.
(COMBINED LEVELS - R.B.F. AND CITY) MISC. LEVEL WORK

REGISTERED PROFESSIONAL ENGINEER GARY A. MARTIN No. 50318 Exp. 6/30/07 CIVIL STATE OF CALIFORNIA

INDEXED 8-30-05 LH

UNDERGROUND SERVICE ALERT
CALL BEFORE YOU DIG
Call:Toll FREE 1-800-227-2600
TWO WORKING DAYS BEFORE YOU DIG
"CAUTION": Remember that the USA Center notifies only those utilities belonging to the center. There could be other utilities present at the work site. The center will inform you of whom they will notify.

CITY OF RIVERSIDE WATER SYSTEM
APPROVED BY: MW McLeod
DATE: 7/11/05

CITY OF RIVERSIDE BUSINESS TAX CERTIFCATE No. 109986 EXP. 2/7/06

19 Spectrum Pointe Drive • Suite 609
Lake Forest, CA 92630
(949) 599-0870
(949) 599-0880 Fax
MAYERS & ASSOCIATES
Civil Engineering, Inc.
PLANNING • ENGINEERING • SURVEYING

APPROVED BY: [signature] DATE: 8/11/05
R.C.E. No. 50318
J.N. 02-0069-02 FOR:

MARK	REVISIONS	APPR.	DATE

DESIGNED BY: M.M. DRAWN BY: M.M. CHECKED BY: G.M.

CITY OF RIVERSIDE, CALIFORNIA
PUBLIC WORKS DEPARTMENT

APPROVED BY	BY	DATE
PRINCIPAL ENGINEER	PH	8/8/05
PARK DEPARTMENT	—	—
TRAFFIC DIVISION	—	—

APPROVED BY [signature] CITY ENGINEER
DATE 8/8/05

STORM DRAIN PLAN & PROFILE
TRACT NO. 32205
INDEX MAP
SCALE: AS SHOWN

ACCOUNT No.
DRAWING NUMBER
D-777
SHEET 1 OF 2
PW05-0162

Dwg. Revision Date: 07/08/2005 BY: J.C. PLOT DATE: 07/08/2005

P:\03-0069-08 EAST PRESIDIO\IMPROVEMENTS\STORM DRAIN\SHT01.DWG

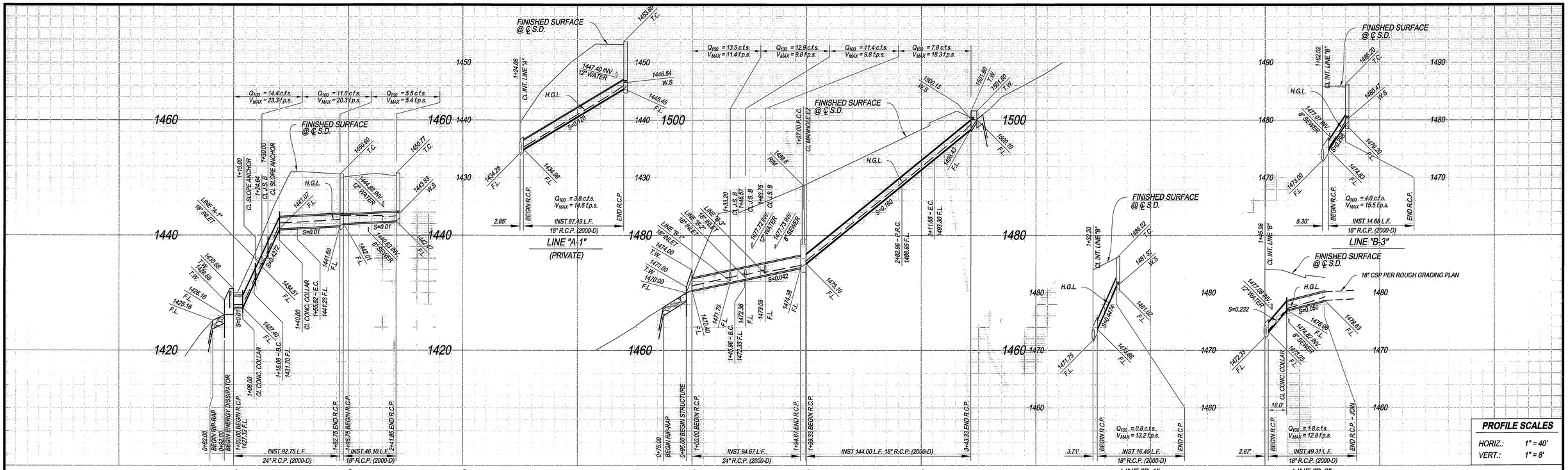

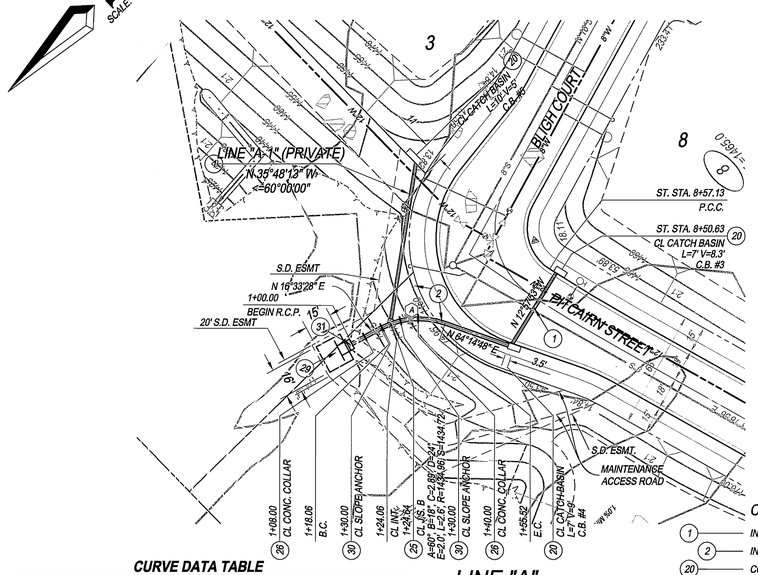

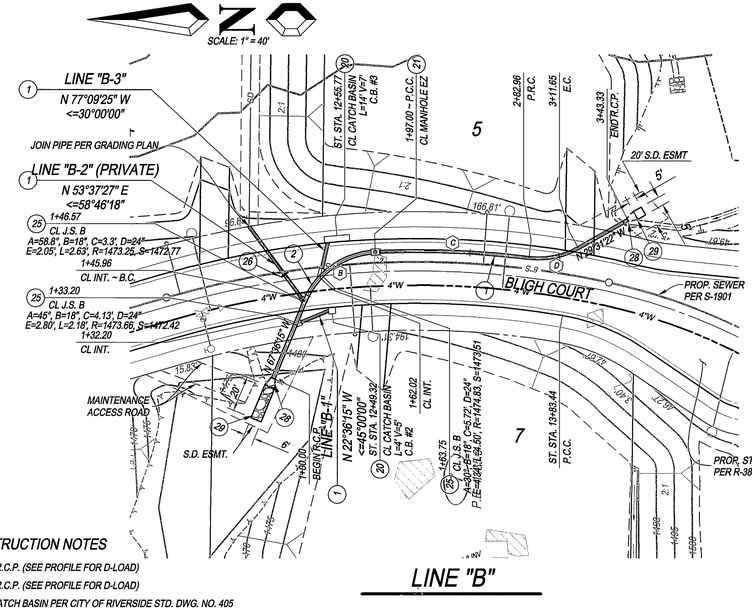

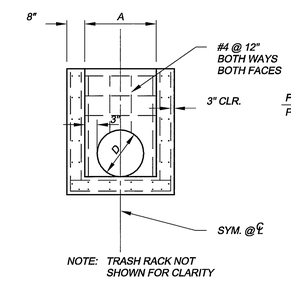

SECTION A - A

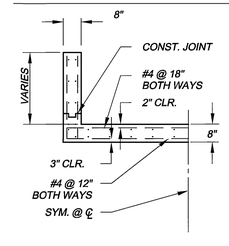

SECTION B - B

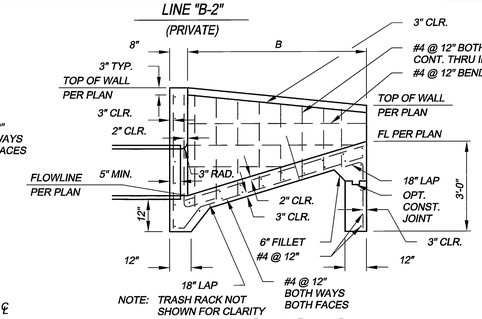

SECTION C - C

(NOTE: HEADWALL FENCE NOT SHOWN)

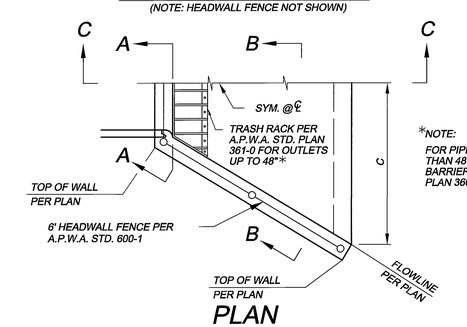

*NOTE: FOR PIPE SIZES GREATER THAN 48" USE PROTECTION BARRIER PER A.P.W.A. STD. PLAN 360-0

PLAN

CURVE DATA TABLE

	DELTA	RADIUS	LENGTH	TANGENT
A	47°41'20"	45.00	37.45	19.89
B	64°58'51"	45.00	51.04	28.66
C	9°38'17"	511.00	85.96	43.08
D	36°32'15"	45.00	28.70	14.86

CONSTRUCTION NOTES

1. INST. 18" R.C.P. (SEE PROFILE FOR D-LOAD)
2. INST. 24" R.C.P. (SEE PROFILE FOR D-LOAD)
20. CONST. CATCH BASIN PER CITY OF RIVERSIDE STD. DWG. NO. 405
21. CONST. MANHOLE EZ PER CITY OF RIVERSIDE STD. DWG. NO. 431
25. CONST. J.S. B PER CITY OF RIVERSIDE STD. DWG. NO. 421
26. CONST. CONCRETE COLLAR PER CITY OF RIVERSIDE STD. DWG. NO. 424
28. CONST. INLET/OUTLET HEADWALL PER DETAIL HEREON
29. CONST. RIP-RAP PER DETAIL ON SHEET NO. 1
30. CONST. SLOPE ANCHOR PER DETAIL ON SHEET NO. 1
31. CONST. ENERGY DISSIPATOR PER APWA STD. PLAN 384-1; W=6'

DIMENSIONS

LINE	A	B	C	D
LINE "B" UPPER	2.0'	5.0'	2.5'	18"
LINE "B" LOWER	2.5'	5.0'	3.0'	24"

28 INLET/OUTLET HEADWALL DETAIL

N.T.S.

Indexed 8-30-05 GH

BENCH MARK DESCRIPTION:

POINT ID: GPS-69
ELEVATION: 1083.685 ELEVATION: 0 ELEVATION: 0 ELEVATION: 0
DATE LVLD: 1998 DATE LVLD: 0 DATE LVLD: 0 DATE LVLD: 0
REFERENCE: LL45/69
DATUM: 1929 ADJUSTMENT YEAR: 1971
2ND ORDER POINT
DESCRIPTION:
G.P.S. POINT 69 - A 2 1/2" BRASS DISK STAMPED "CITY OF RIVERSIDE GPS STATION 69 - 1991" SET IN THE NORTH END OF A CATCH BASIN 1' EAST OF THE EAST CURB OF WASHINGTON STREET AND 3' SOUTH OF THE BCR AT THE SOUTHEAST CURB RETURN OF WASHINGTON STREET AND BRADLEY STREET.
(COMBINED LEVELS - R.B.F. AND CITY) MISC. LEVEL WORK

UNDERGROUND SERVICE ALERT
Call:Toll FREE
1-800-227-2600
TWO WORKING DAYS BEFORE YOU DIG
"CAUTION": Remember that the USA Center notifies only those utilities belonging to the center. There could be other utilities present at the work site. The center will inform you of whom they will notify.

19 Spectrum Pointe Drive • Suite 609
Lake Forest, CA 92630
(949) 599-0870
(949) 599-0880 Fax
MYERS & ASSOCIATES
Civil Engineering, Inc.
PLANNING • ENGINEERING • SURVEYING

APPROVED BY: R.C.E. No. 50318 DATE: 7/11/05

J.N. 02-0069-02 FOR:

MARK	REVISIONS	APPR.	DATE

DESIGNED BY: M.M. DRAWN BY: M.M. CHECKED BY: G.M.

REGISTERED PROFESSIONAL ENGINEER GARY A. MARTIN No. 50318 Exp. 6/30/07 CIVIL STATE OF CALIFORNIA

CITY OF RIVERSIDE, CALIFORNIA
PUBLIC WORKS DEPARTMENT

APPROVED BY	BY	DATE
PRINCIPAL ENGINEER		8/3/05
PARK DEPARTMENT		
TRAFFIC DIVISION		

APPROVED BY: CITY ENGINEER
DATE 8/3/05

STORM DRAIN PLAN & PROFILE
TRACT NO. 32205
LINE "A" & "B"

SCALE: AS SHOWN

ACCOUNT No.
DRAWING NUMBER
D-777
SHEET 2 OF 2
PW05-0162

Dwg. Revision Date: 07/08/2005 BY: J.C. PLOT DATE: 07/08/2005

Job No. 02-0069-02 Bin No. XXX Doc No. XXX CITY OF RIVERSIDE STORM DRAIN PLAN & PROFILE

P:\03-0069-08 EAST PRESIDIO\IMPROVEMENTS\STORM DRAIN\SHT02.DWG