RIVERSIDE COUNTY FLOOD CONTROL AND WATER CONSERVATION DISTRICT

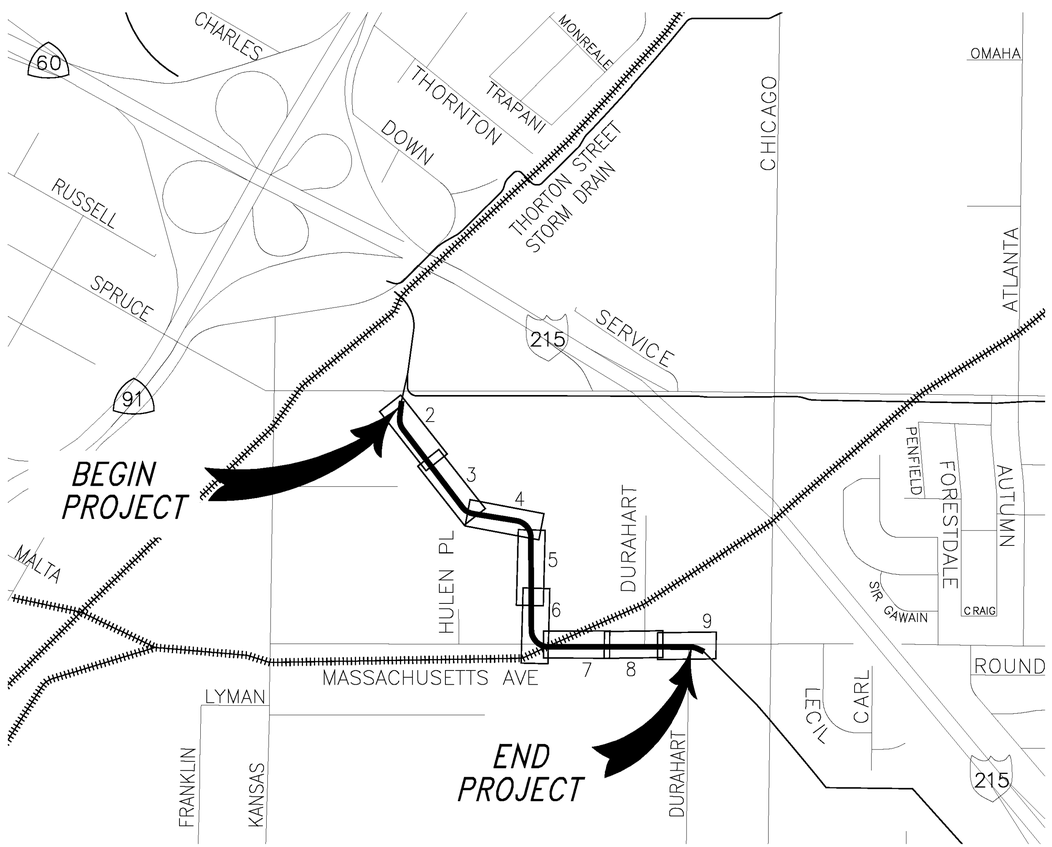

INDEX MAP
N.T.S.

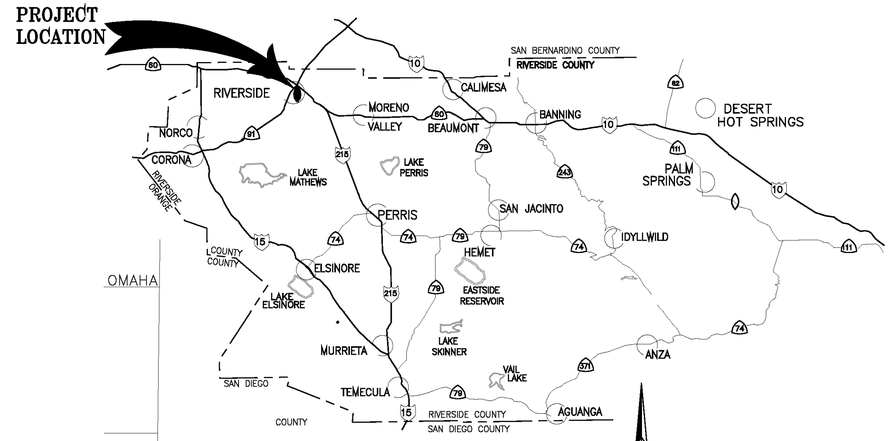

VICINITY MAP
N.T.S.

SHEET INDEX

	SHEET NO.
TITLE SHEET	1
PLAN & PROFILE	2–9
GRADING PLAN	10
CONNECTOR PIPE PROFILES	11–13
TRAFFIC CONTROL PLAN	14
PAVING PLAN	15
STRIPING PLAN	16
BEDDING AND PAYLINE SECTIONS	17

R.C.F.C. & W.C.D. STANDARD DRAWINGS

CB	110	CONCRETE DROP INLET
JS	227	JUNCTION STRUCTURE NO. 2
JS	228	JUNCTION STRUCTURE NO. 3
JS	229	JUNCTION STRUCTURE NO. 4
LD	201	LOCAL DEPRESSION NO. 2
MH	251	MANHOLE NO. 1
MH	252	MANHOLE NO. 2
MH	254	MANHOLE NO. 4
MH	256	MANHOLE FRAME AND COVER (PRESSURE)
MH	258	STANDARD PRESSURE MANHOLE SHAFT
MH	261	MANHOLE SHAFT SAFETY LEDGE
M	816	CONCRETE BULKHEAD
M	803	CONCRETE COLLAR
TS	301	TRANSITION STRUCTURE NO. 1
TS	303	TRANSITION STRUCTURE NO. 3

CITY OF RIVERSIDE STANDARD DRAWINGS

STD 200	CURB AND GUTTER
STD 380	CHAIN LINK FENCE
STD 400	STORM WATER CATCH BASIN TYPE 1
STD 405	CATCH BASIN
STD 554	REMODELING DETAILS FOR SEWER LATERALS
STD 453	TRENCH BACKFILL

CALTRANS STANDARD PLANS

STD D-80 REINFORCED CONCRETE BOX

GENERAL NOTES

1. BEDDING AND PAYLINES ARE SHOWN ON RCFC STANDARD DRAWING M815 UNLESS SHOWN OTHERWISE ON THESE PLANS
2. ALL STATIONING REFERS TO CENTERLINE OF CONSTRUCTION.
3. ALL STORM DRAIN REFERENCES AND CROSS SECTIONS ARE TAKEN LOOKING DOWNSTREAM.
4. TOPOGRAPHY BY DIGITAL PHOTOGRAMMETRIC METHODS. AERIAL PHOTOGRAPHS TAKEN AT AN ALTITUDE NOT TO EXCEED A FLYING HEIGHT TO CONTOUR INTERVAL OF 1800. PHOTOGRAPHY DATED 06-06-2012.
5. ALL ELEVATIONS SHOWN ARE IN FEET AND DECIMALS THEREOF BASED ON THE NORTH AMERICAN VERTICAL DATUM (NAVD 88). ALL COORDINATES ARE SHOWN IN FEET AND DECIMALS THEREOF BASED ON THE NORTH AMERICAN DATUM (NAD 83), CALIFORNIA SYSTEM (CCS), ZONE 6 AND EPOCH 2007.00
6. STANDARD DRAWINGS CALLED FOR ON THE PLAN & PROFILE SHALL CONFORM TO THE LATEST EDITION OF R.C.F.C. & W.C.D. STD. DRAWINGS, UNLESS OTHERWISE NOTED.
7. ELEVATIONS AND LOCATIONS OF UTILITIES WERE OBTAINED FROM AVAILABLE INFORMATION AND ARE SHOWN APPROXIMATELY ON THESE PLANS. 48 HOURS BEFORE EXCAVATION CALL UNDERGROUND SERVICE ALERT AT 1-800-227-2600. ALL UTILITIES SHALL BE PROTECTED IN PLACE EXCEPT AS NOTED ON PLANS AND SPECIFICATIONS.
8. THE CONTRACTOR IS REQUIRED TO CONTACT ALL UTILITY AGENCIES REGARDING TEMPORARY SUPPORT AND SHORING REQUIREMENTS FOR THE VARIOUS UTILITY LINES SHOWN ON THESE PLANS.
9. ALL OPENINGS RESULTING FROM CUTTING OR PARTIAL REMOVAL OF EXIST. CULVERTS, PIPES, OR SIMILAR STRUCTURES TO BE ABANDONED SHALL BE SEALED AT BOTH ENDS WITH 6" MIN CLASS "B" CONCRETE.
10. UNLESS OTHERWISE SPECIFIED, MINIMUM STREET RECONSTRUCTION SHALL BE 4" TYPE "A" HOT MIX ASPHALT OVER 6" CLASS 2 AGGREGATE BASE OR AS SPECIFIED BY THE ENGINEER.
11. ALL RECONSTRUCTION, RESURFACING, AND PAVEMENT DELINEATION, CURBS, GUTTERS, SIDEWALKS, AND OTHER IMPROVEMENTS ARE TO BE RECONSTRUCTED IN KIND AT THE SAME LOCATIONS AND ELEVATIONS AS THE EXISTING IMPROVEMENTS, UNLESS OTHERWISE NOTED.
12. INDICATES APPROXIMATE SOIL BORING LOCATION PER SOILS REPORT BY CHJ, INC. DATED 09/20/2013.
13. ALL PIPE LENGTHS ARE HORIZONTAL PROJECTIONS (NOT TRUE LENGTHS OF PIPE) AND ARE THE BASIS OF THE ESTIMATES OF QUANTITIES. THE CONTRACTOR SHALL DETERMINE THE TRUE QUANTITY OF PIPE REQUIRED FOR THIS PROJECT PRIOR TO PLACING THE ORDER.
14. IT IS THE CONTRACTOR'S RESPONSIBILITY TO POTHOLE AND VERIFY LOCATION AND ELEVATION OF EXISTING UTILITIES PRIOR TO THE START OF ANY CONSTRUCTION.

Record Drawing
APPROVED BY: DLow
DATE: 1/4/18

P8\213407
CITY OF RIVERSIDE
DWG. D# 877

CONSTRUCTION DRAWING SET DATED AUGUST 1, 2016

Don't Dig...Until You Call U.S.A. Toll Free
1-800-227-2600
for the location of buried utility lines.
Don't disrupt vital services.
BURIED CABLE
TWO WORKING DAYS BEFORE YOU DIG

BENCHMARK
Z14818
FD PK NAIL, NO TAG, FLUSH AT INTERSECTION OF KANSAS STREET AND SPRUCE STREET.
ELEVATION 889.02

APPROVED BY:
ALBERT A. WEBB ASSOCIATES
ENGINEERING CONSULTANTS
3788 McCRAY STREET
RIVERSIDE CA. 92506
PH. (951) 686-1070
FAX (951) 788-1256
ENGINEER, RCE C67239 — 08/01/2016
DATE:

REGISTERED PROFESSIONAL ENGINEER — JOSEPH C. CALDWELL — NO. C67239 — CIVIL — STATE OF CALIFORNIA

REF.	REVISIONS	ENGINEER APPR.	ENGINEER DATE	RCFC&WCD APPR.	RCFC&WCD DATE

RIVERSIDE COUNTY FLOOD CONTROL AND WATER CONSERVATION DISTRICT
RECOMMENDED FOR APPROVAL BY: CHIEF OF DESIGN AND CONSTRUCTION — DATE: 08/01/2016
APPROVED BY: GENERAL MANAGER - CHIEF ENGINEER — DATE: 08/01/2016

CITY OF RIVERSIDE
PUBLIC WORKS OF DEPARTMENT
APPROVAL BY: DEPUTY DIRECTOR/CITY ENGINEER
DATE: 08/01/2016

UNIVERSITY WASH CHANNEL
STAGE 3

TITLE SHEET

PROJECT NO. 1-0-0120
DRAWING NO. 1-0714
SHEET NO. 1 OF 17

G:\2013\13-0025\DRAWINGS\DESIGN\13-0025-C-COVER.DWG 8/2/2016 8:53 AM

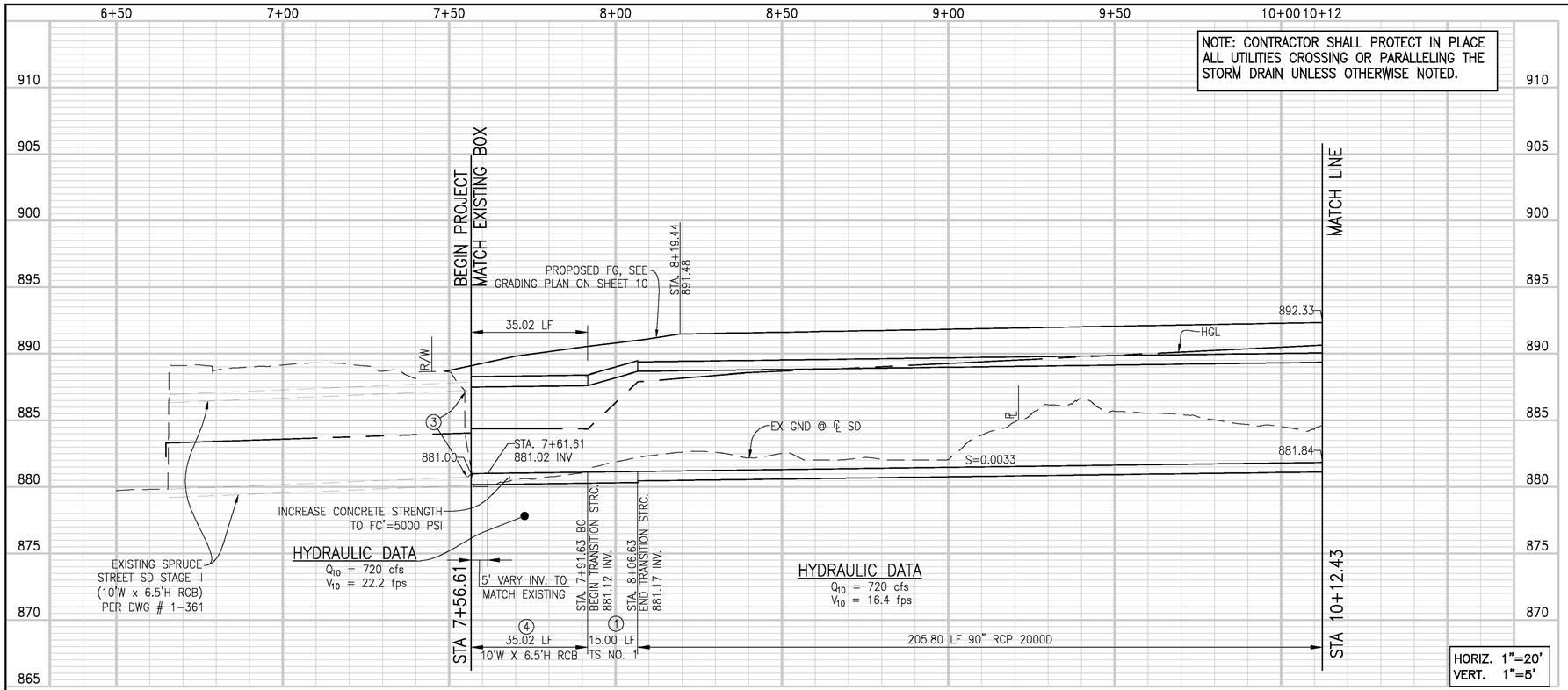

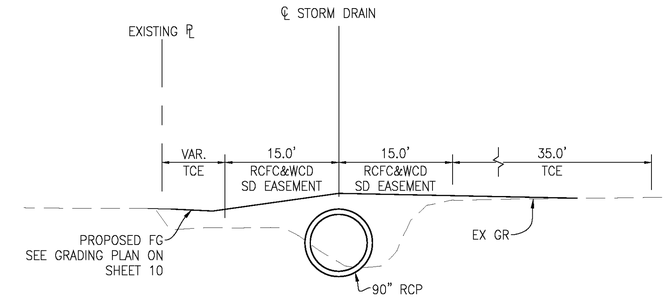

SECTION AT STA 8+50

TYPICAL FROM STA 7+56.61 TO STA 10+12.43

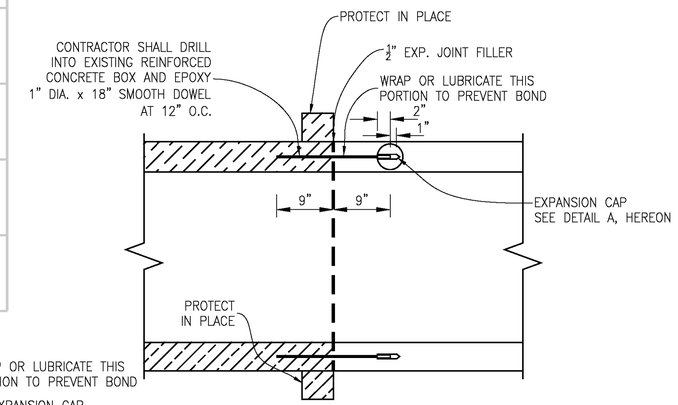

TYPICAL RCB TO RCB CONNECTION

NTS

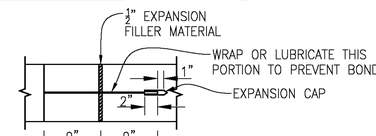

TRANSVERSE EXPANSION JOINT

DETAIL "A"

NTS

NOTE

DOWELS SHALL BE PLACED AT 12 INCHES SPACING CENTERED IN THE BOTTOM SLAB, TOP SLAB, AND SIDE WALLS, AND AT EACH CORNER.

NO. OF DOWELS

-4 (1 AT EACH CORNER)
-12 (6 AT EACH SIDE WALL)
-18 (9 AT EACH SLAB)

TOTAL: 34 DOWELS

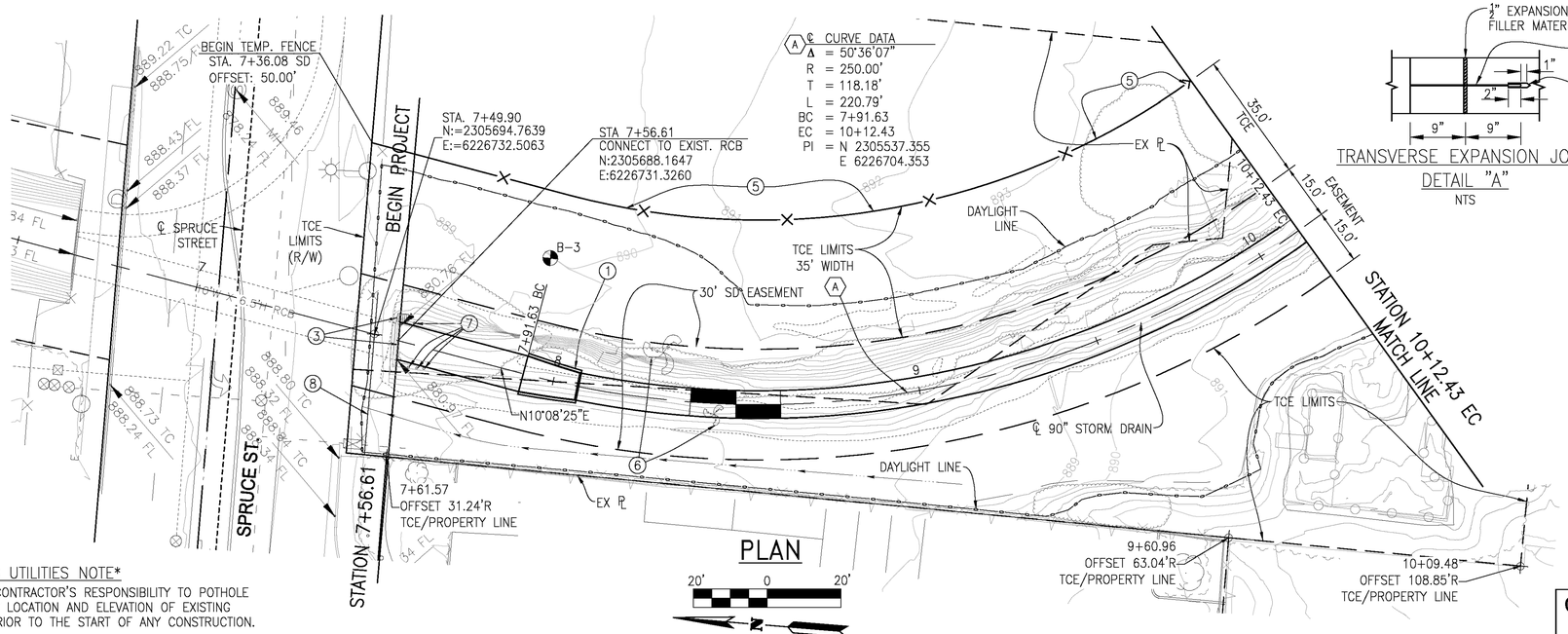

PLAN

NOTES

1. CONSTRUCT TRANSITION STRUCTURE NO. 1 PER STD. DWG. NO. TS301. INCREASE CONCRETE STRENGTH TO FC'=5000 PSI
2. STAKING OF FINISHED GRADE BASED ON PROFILE. FOR SITE GRADING SEE SHEET 10. FOR BEDDING AND PAYLINES SEE SHEET 17.
3. REMOVE TRASH RACK AND CONCRETE STEPS AND CONNECT EXISTING BOX TO NEW BOX AS SHOWN HEREON
4. CONSTRUCT 10'W X 6.5'H REINFORCED CONCRETE BOX (RCB) PER CALTRANS STD. PLANS D80. INCREASE CONCRETE STRENGTH TO Fc'=5000 PSI. PROVIDE #4 @ 12" EACH WAY, LAP "C" BARS 2 FEET OR USE SPAN LENGTH PER NOTE 9 OF THE CALTRANS STD. PLAN.
5. CONSTRUCT TEMPORARY 6' HIGH CHAIN LINK FENCE ALONG TCE LIMITS AS SHOWN HEREON.
6. REMOVE AND DISPOSE OF EXISTING TREES AS DIRECTED BY THE ENGINEER.
7. REMOVE INTERFERING PORTIONS OF RAIL.
8. PROTECT EXISTING GATE IN PLACE

EXISTING UTILITIES NOTE

IT IS THE CONTRACTOR'S RESPONSIBILITY TO POTHOLE AND VERIFY LOCATION AND ELEVATION OF EXISTING UTILITIES PRIOR TO THE START OF ANY CONSTRUCTION.

Record Drawing

APPROVED BY: D Gow

DATE: 1/4/18

P8\213407

CITY OF RIVERSIDE DWG. D# 877

CONSTRUCTION DRAWING SET DATED AUGUST 1, 2016

G:\2013\13-0025\DRAWINGS\DESIGN\13-0025-C-SD.DWG 8/2/2016 9:36 AM

Don't Dig...Until You Call U.S.A. Toll Free 1-800-227-2600 for the location of buried utility lines. Don't disrupt vital services.

TWO WORKING DAYS BEFORE YOU DIG

BENCHMARK Z14818

FD PK NAIL, NO TAG, FLUSH AT INTERSECTION OF KANSAS STREET AND SPRUCE STREET.

ELEVATION 889.02

APPROVED BY: ALBERT A. WEBB ASSOCIATES

ENGINEERING CONSULTANTS, 3788 McCRAY STREET, RIVERSIDE CA. 92506, PH. (951) 686-1070, FAX (951) 788-1256

ENGINEER, RCE C67239 — DATE: 08/01/2016

REGISTERED PROFESSIONAL ENGINEER JOSEPH C. CALDWELL NO. C67239 CIVIL STATE OF CALIFORNIA

REF.	DESCRIPTION	APPR.	DATE	APPR.	DATE
	REVISIONS	ENGINEER		RCFC&WCD	

RIVERSIDE COUNTY FLOOD CONTROL AND WATER CONSERVATION DISTRICT

RECOMMENDED FOR APPROVAL BY: — DATE: 08/01/2016

APPROVED BY: — DATE: 08/01/2016

CITY OF RIVERSIDE
PUBLIC WORKS OF DEPARTMENT

APPROVAL BY: — DEPUTY DIRECTOR/CITY ENGINEER — DATE: 08/01/2016

UNIVERSITY WASH CHANNEL
STAGE 3

STA 7+56.61 TO 10+12.43 EC

PROJECT NO. 1-0-0120

DRAWING NO. 1-0714

SHEET NO. 2 OF 17

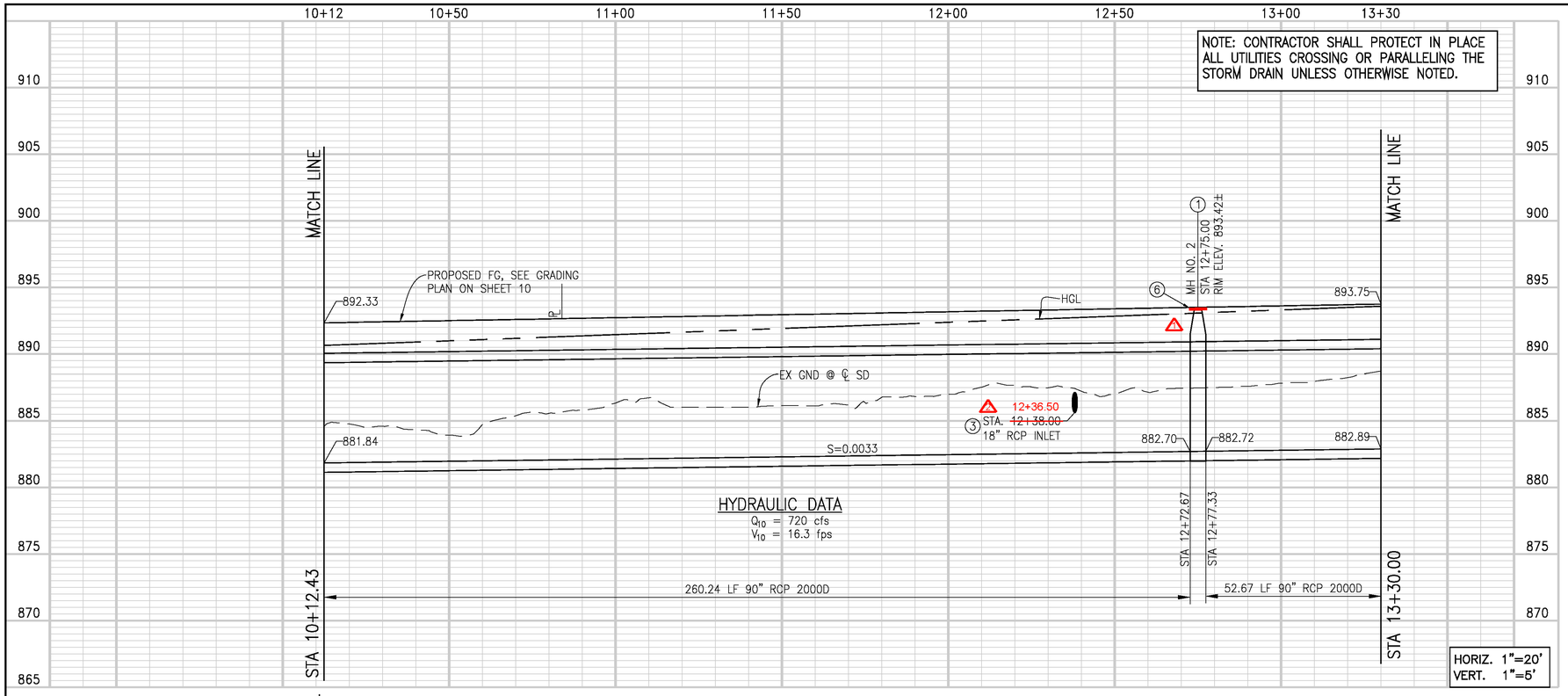

NOTE: CONTRACTOR SHALL PROTECT IN PLACE ALL UTILITIES CROSSING OR PARALLELING THE STORM DRAIN UNLESS OTHERWISE NOTED.

HYDRAULIC DATA
Q_{10} = 720 cfs
V_{10} = 16.3 fps

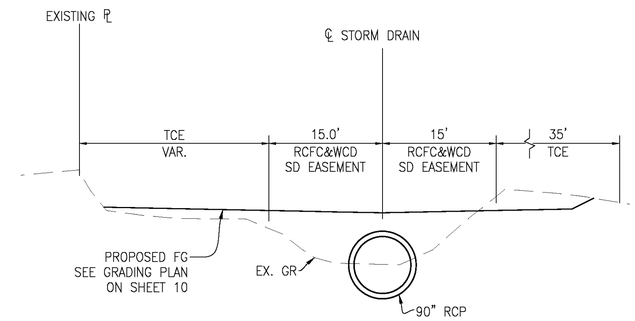

SECTION AT STA 11+50
TYPICAL FROM STA 10+12.43 TO STA 13+30

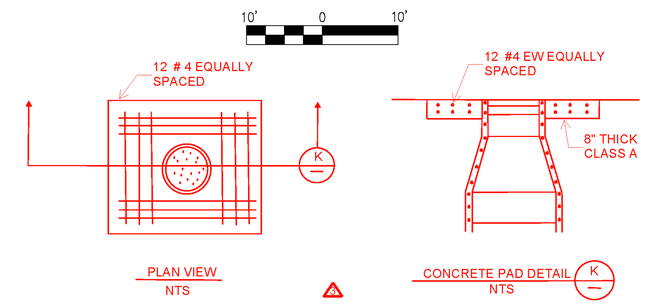

PLAN VIEW
NTS

CONCRETE PAD DETAIL K
NTS

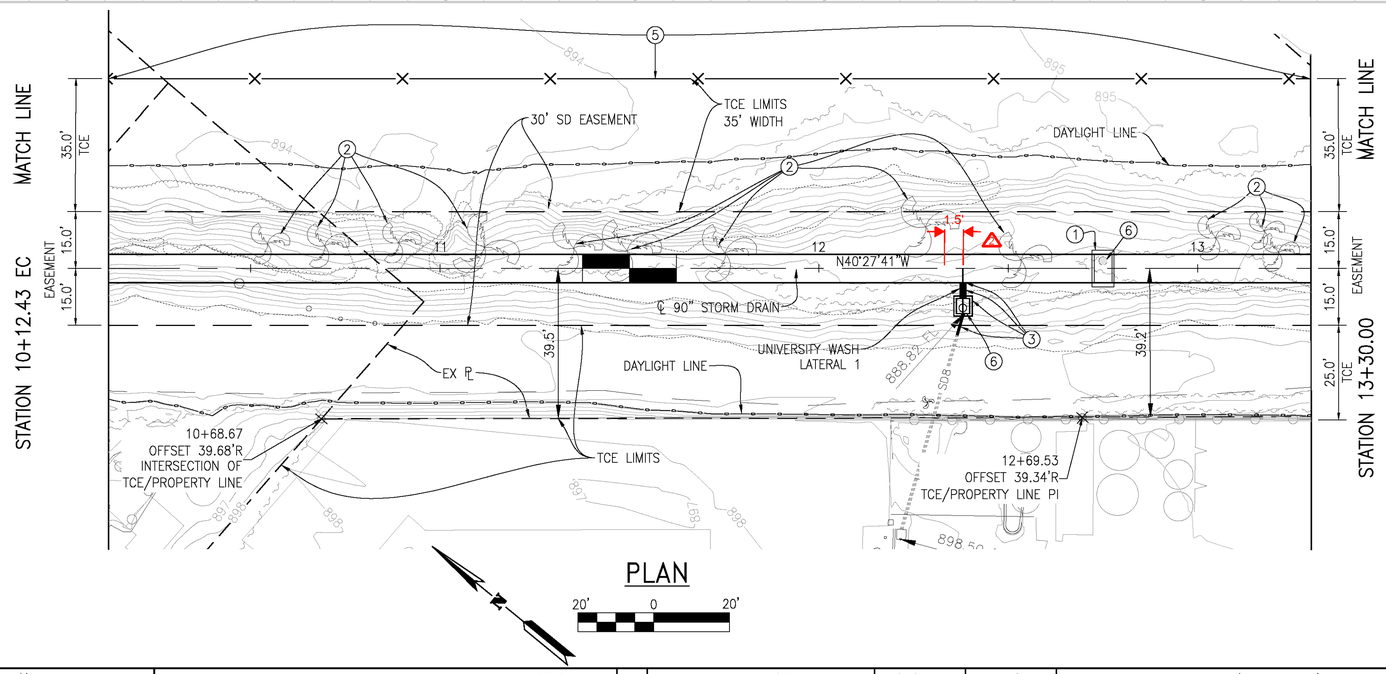

PLAN
20' 0 20'

NOTES

1. CONSTRUCT PRESSURE MANHOLE NO. 2 PER STD. DWG. NO. MH252: D1=90", D2=90". INSTALL MANHOLE FRAME, COVER, AND SHAFT PER STD. DWG. NOS. MH256 AND MH258.
2. REMOVE AND DISPOSE OF EXISTING TREES AND VEGETATION AS REQUIRED WITHIN THE EASEMENT AND TCE AS DIRECTED BY THE ENGINEER.
3. CONSTRUCT PRESSURE MANHOLE NO. 1 PER STD. DWG. NO. MH251. INSTALL PRESSURE MANHOLE FRAME, COVER, AND SHAFT PER STD. DWG. NO. MH 256 AND 258. (A=90°). INSTALL 18" CONNECTOR PIPE AND CONNECTION TO EXISTING 8" PVC PER DETAILS ON SHEET 11. TOP STEP SHALL NOT BE INSTALLED, PER DETAILS ON CONNECTOR PIPE PROFILE.
4. STAKING OF FINISHED GRADE BASED ON PROFILE. FOR SITE GRADING SEE SHEET 10. FOR BEDDING AND PAYLINES SEE SHEET 17.
5. CONSTRUCT TEMPORARY 6' HIGH CHAIN LINK FENCE ALONG TCE LIMITS AS SHOWN HEREON.
6. CONSTRUCT ~~5'~~ 6' BY ~~5'~~ 6' CLASS ~~B~~ A CONCRETE PAD ~~4"~~ 8" THICK CENTERED AROUND THE MANHOLE PER DETAIL HEREON.
7. CONSTRUCT JS NO. 4 PER STD DWG NO. JS229, A=90 , ELEV. PER PROFILE SHEET 11.

Record Drawing
APPROVED BY: DGa
DATE: 1/4/18

EXISTING UTILITIES NOTE
IT IS THE CONTRACTOR'S RESPONSIBILITY TO POTHOLE AND VERIFY LOCATION AND ELEVATION OF EXISTING UTILITIES PRIOR TO THE START OF ANY CONSTRUCTION.

CONSTRUCTION DRAWING SET DATED AUGUST 1, 2016

G:\2013\13-0025\DRAWINGS\DESIGN\13-0025-C-SD.DWG 8/2/2016 9:36 AM

Don't Dig...Until You Call U.S.A. Toll Free 1-800-227-2600 for the location of buried utility lines. Don't disrupt vital services.
BURIED CABLE
TWO WORKING DAYS BEFORE YOU DIG

BENCHMARK
Z14818
FD PK NAIL, NO TAG, FLUSH AT INTERSECTION OF KANSAS STREET AND SPRUCE STREET.
ELEVATION 889.02

APPROVED BY:
ALBERT A. WEBB ASSOCIATES
ENGINEERING CONSULTANTS
3788 McCRAY STREET
RIVERSIDE, CA. 92506
PH. (951) 686-1070
FAX (951) 788-1256
ENGINEER, RCE C67239 — DATE: 08/01/2016

REGISTERED PROFESSIONAL ENGINEER JOSEPH C. CALDWELL NO. C67239 CIVIL STATE OF CALIFORNIA

REF.	DESCRIPTION	APPR.	DATE	APPR.	DATE
1	NOTE ADDED			RM	1/4/18
2	CONCRETE PAD MOVED 1.5'			DG	1/4/18
3	DOWNSTREAM				
4	DETAIL ADDED			DG	1/8/18

ENGINEER — REVISIONS — RCFC&WCD

RIVERSIDE COUNTY FLOOD CONTROL AND WATER CONSERVATION DISTRICT
RECOMMENDED FOR APPROVAL BY: DATE: 08/01/2016
APPROVED BY: DATE: 08/01/2016

CITY OF RIVERSIDE
PUBLIC WORKS DEPARTMENT
APPROVAL BY: DEPUTY DIRECTOR/CITY ENGINEER
DATE: 08/01/2016

P8\213407
CITY OF RIVERSIDE
DWG. D# 877

UNIVERSITY WASH CHANNEL
STAGE 3
STA 10+12.43 EC TO 13+30

PROJECT NO. 1-0-0120
DRAWING NO. 1-0714
SHEET NO. 3 OF 17

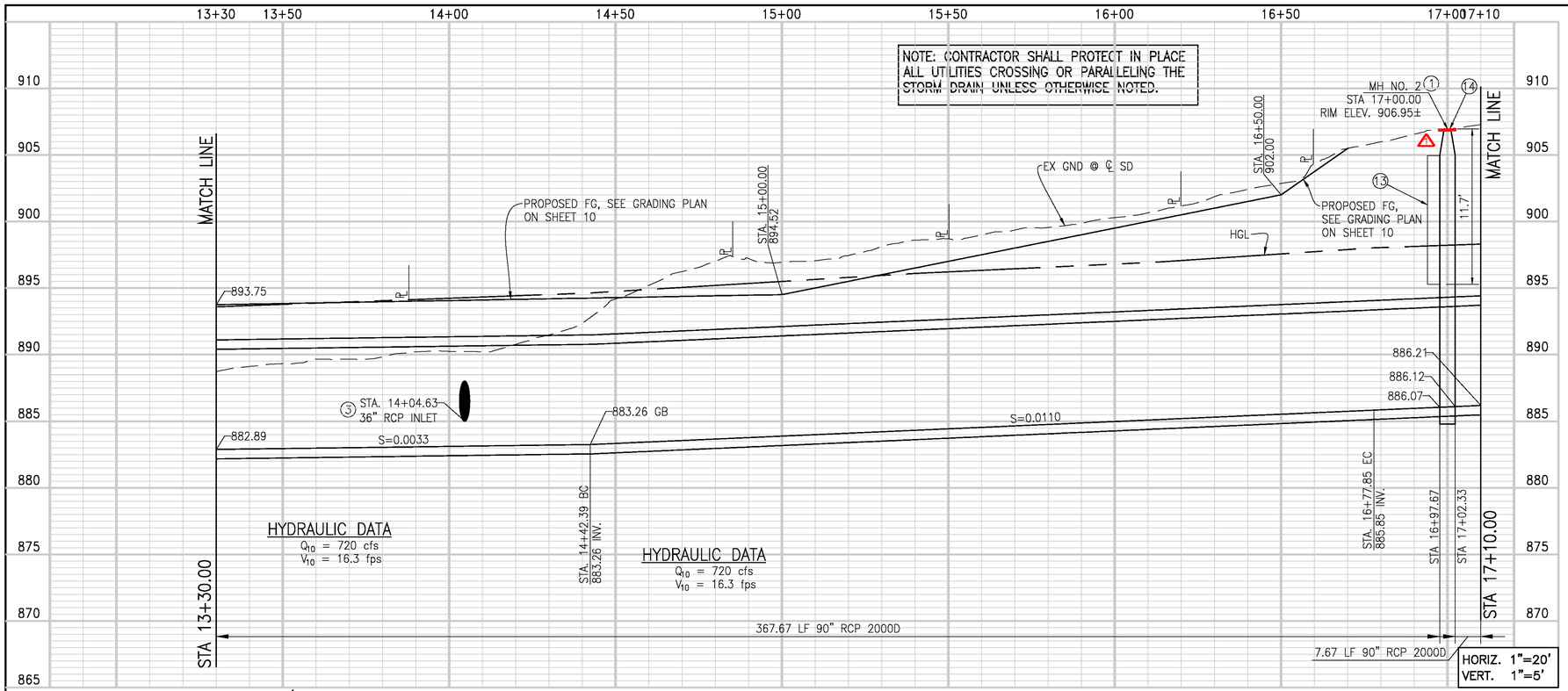

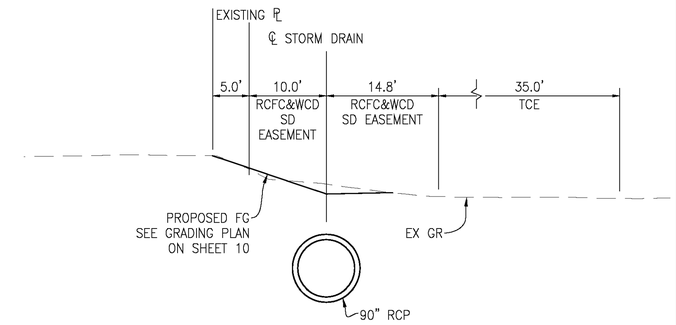

SECTION AT STA 15+75

TYPICAL FROM STA 13+30 TO STA 17+10

10' 0 10'

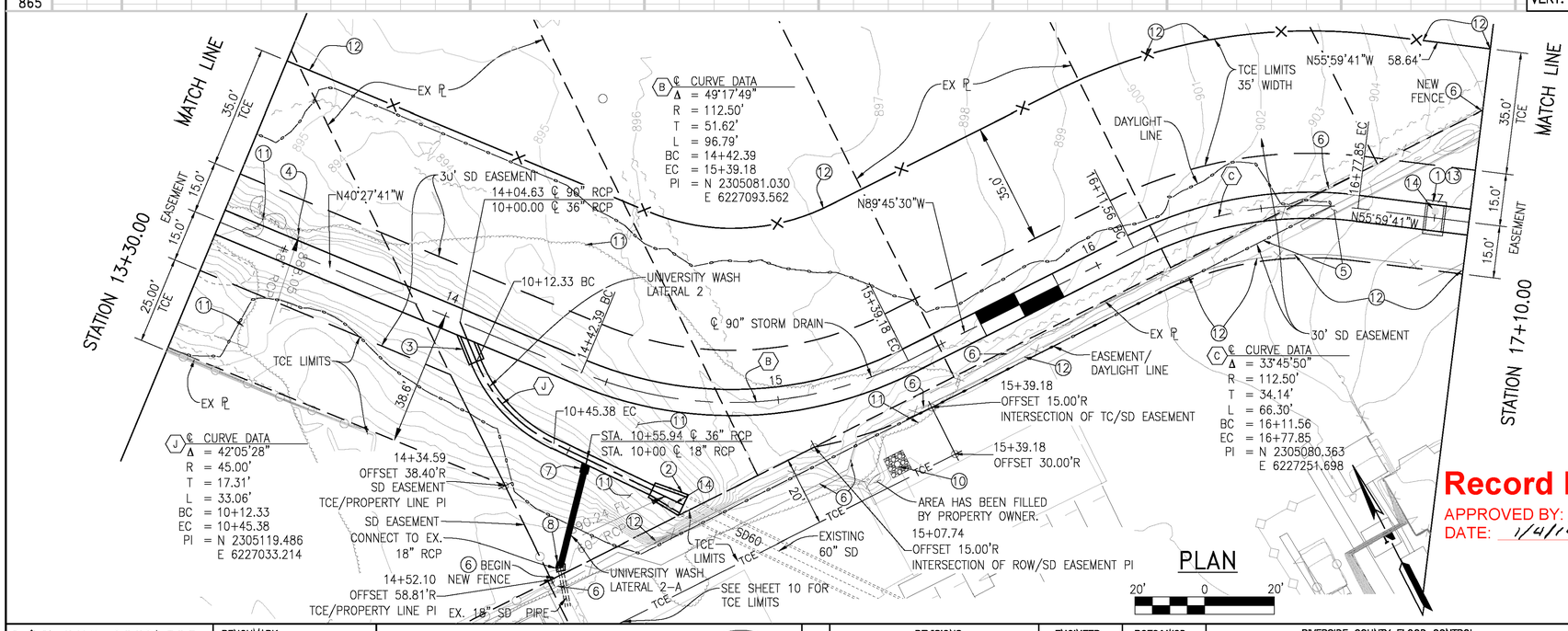

Record Drawing

APPROVED BY: DBarr

DATE: 1/4/19

NOTES

1. CONSTRUCT MANHOLE NO. 2 PER STD. DWG. NO. MH252: D_1=90", D_2=90".
2. CONSTRUCT MANHOLE NO. 2 PER STD. DWG. NO. MH252: D_1=60", D_2=36"
3. CONSTRUCT JS NO. 2 (A=45°), 36" CONNECTOR PIPE PER STD. DWG. JS227 AND DETAILS ON SHEET 11.
4. REMOVE AND DISPOSE OF EXISTING 48" RCP CULVERT.
5. K-RAILS, CONCRETE BLOCKS, EQUIPMENT AND OTHER MATERIALS WITHIN EASEMENT AND TEMPORARY CONSTRUCTION EASEMENT TO BE RELOCATED BY OTHERS.
6. REMOVE CHAIN LINK FENCE, REPLACE WITH NEW PERMANENT CHAIN LINK FENCE WITH 3 STRING BARB WIRE OF THE SAME HEIGHT AS THE EXISTING PER CITY OF RIVERSIDE STD. DWG. NO. 380.
7. CONSTRUCT JS NO. 2 (A=79°) PER STD. DWG. NO. JS227 AND DETAILS ON SHEET 13.
8. CONSTRUCT CONCRETE COLLAR PER STD. DWG. NO. M803.
9. STAKING OF FINISHED GRADE BASED ON PROFILE. FOR SITE GRADING SEE SHEET 10. FOR BEDDING AND PAYLINES SEE SHEET 17.
10. PROTECT IN PLACE SEWER GRINDER PUMP AND ASSOCIATED ON-SITE SEWER FACILITIES.
11. REMOVE AND DISPOSE OF EXISTING TREES, SHRUBS AND PLANTING WITHIN THE TCE LIMITS AS DIRECTED BY THE ENGINEER
12. CONSTRUCT TEMPORARY 6' HIGH CHAIN LINK FENCE ALONG TCE LIMITS AS SHOWN HEREON
13. CONSTRUCT MANHOLE SHAFT SAFETY LEDGE PER STD. DWG. NO. MH261
14. CONSTRUCT ~~5'~~ 6' BY ~~5'~~ 6' CLASS ~~B~~ A CONCRETE PAD ~~4"~~ 8" THICK CENTERED AROUND THE MANHOLE. PER DETAIL ON SHEET 3.
15. PROTECT IN PLACE EXISTING FENCE.

P8\213407

CITY OF RIVERSIDE
DWG. D# 877

EXISTING UTILITIES NOTE

IT IS THE CONTRACTOR'S RESPONSIBILITY TO POTHOLE AND VERIFY LOCATION AND ELEVATION OF EXISTING UTILITIES PRIOR TO THE START OF ANY CONSTRUCTION.

CONSTRUCTION DRAWING SET DATED AUGUST 1, 2016

G:\2013\13-0025\DRAWINGS\DESIGN\13-0025-C-SD.DWG 8/2/2016 9:36 AM

Don't Dig...Until You Call U.S.A. Toll Free 1-800-227-2600 for the location of buried utility lines. Don't disrupt vital services.

BURIED CABLE

TWO WORKING DAYS BEFORE YOU DIG

BENCHMARK
Z14818
FD PK NAIL, NO TAG, FLUSH AT INTERSECTION OF KANSAS STREET AND SPRUCE STREET.
ELEVATION 889.02

APPROVED BY:
ALBERT A. WEBB ASSOCIATES
ENGINEERING CONSULTANTS
3788 McCRAY STREET
RIVERSIDE, CA. 92506
PH. (951) 686-1070
FAX (951) 788-1256
ENGINEER, RCE C67239 DATE: 08/01/2016

REGISTERED PROFESSIONAL ENGINEER JOSEPH C. CALDWELL NO. C67239 CIVIL STATE OF CALIFORNIA

REF.	DESCRIPTION	APPR.	DATE	APPR.	DATE
1	NOTE REVISION			DB	1/4/19

REVISIONS | ENGINEER | RCFC&WCD

RIVERSIDE COUNTY FLOOD CONTROL AND WATER CONSERVATION DISTRICT
RECOMMENDED FOR APPROVAL BY: DATE: 08/01/2016
APPROVED BY: DATE: 08/01/2016

CITY OF RIVERSIDE
PUBLIC WORKS OF DEPARTMENT
APPROVAL BY: DEPUTY DIRECTOR/CITY ENGINEER
DATE: 08/01/2016

UNIVERSITY WASH CHANNEL
STAGE 3

STA 13+30 TO 17+10

PROJECT NO. 1-0-0120
DRAWING NO. 1-0714
SHEET NO. 4 OF 17

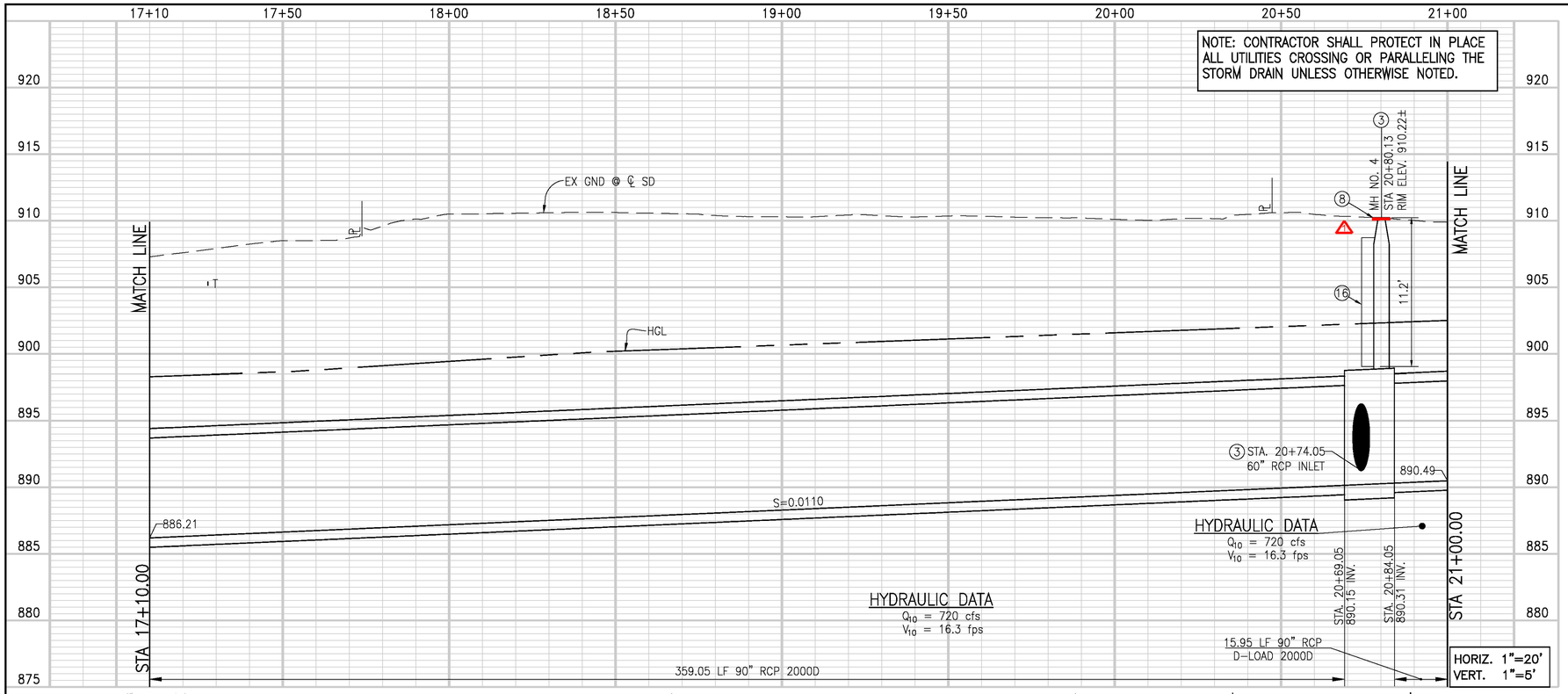

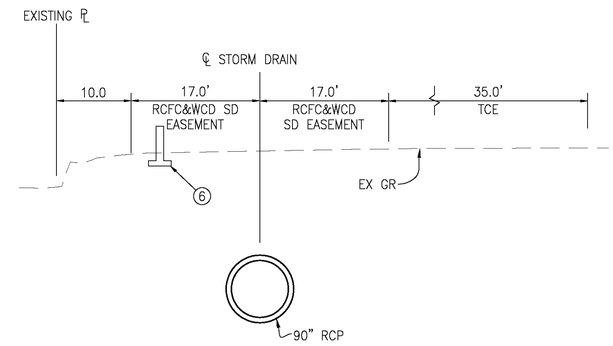

SECTION AT STA 19+00

TYPICAL FROM STA 17+10 TO STA 21+00

10' 0 10'

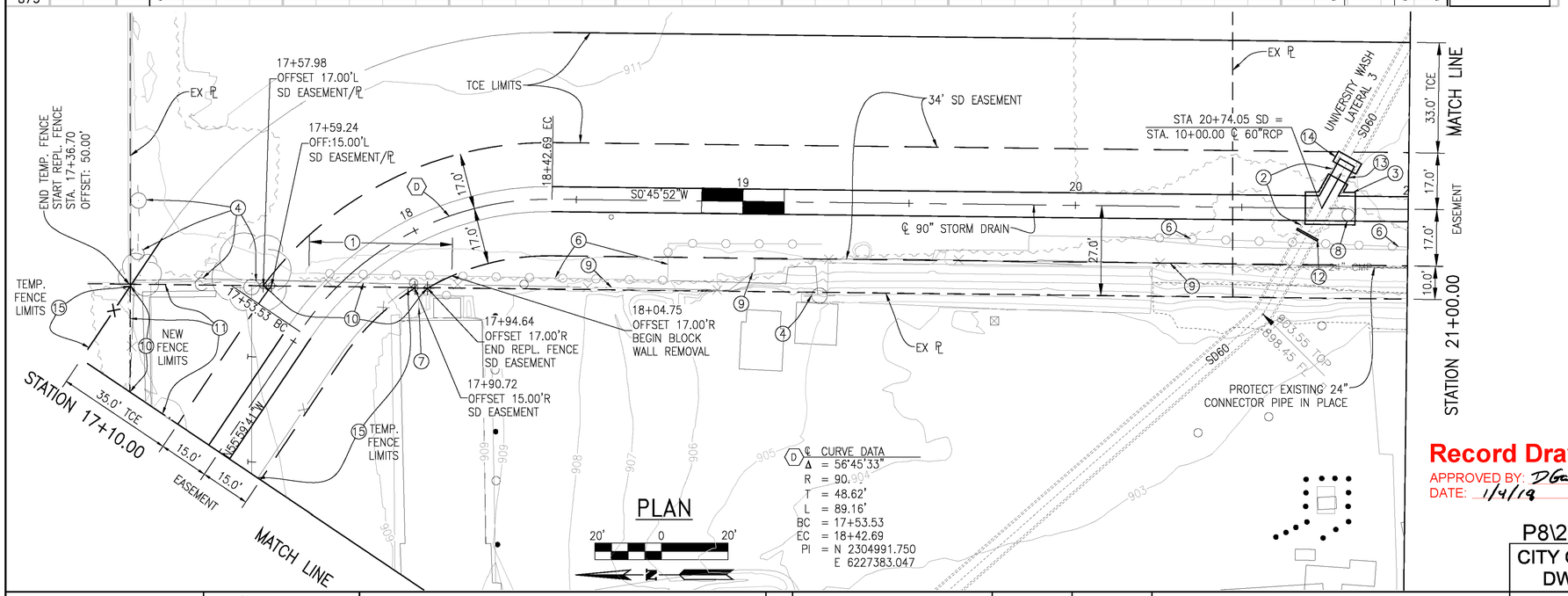

Record Drawing
APPROVED BY: DG
DATE: 1/4/19

NOTES

1. REMOVE, DISPOSE OF INTERFERING PORTIONS OF BLOCK WALL.
2. REMOVE AND DISPOSE OF INTERFERING PORTIONS OF EXISTING 60" STORM DRAIN.
3. CONSTRUCT MANHOLE NO. 4 PER STD. DWG. NO. MH254. A=61°36'36", B=60", C=10', D1=90", D2=90", R=894.73, S=891.26.
4. PROTECT IN PLACE EXISTING POWER POLE AND APPURTENANT GUY WIRES.
5. STAKING OF FINISHED GRADE BASED ON PROFILE. FOR SITE GRADING SEE SHEET 10. FOR BEDDING AND PAYLINES SEE SHEET 17.
6. PROTECT IN PLACE EXISTING BLOCK WALL
7. PROTECT IN PLACE – EXISTING UNDERGROUND MATERIAL STORAGE FACILITY.
8. CONSTRUCT ~~5'~~ 6' BY ~~5'~~ 6' CLASS ~~B~~ A CONCRETE PAD ~~4"~~ 8" THICK CENTERED AROUND MANHOLE ~~X~~ PER DETAIL ON SHEET 3.
9. PROTECT EXISTING CHAIN LINK FENCE IN PLACE.
10. REMOVE CHAIN LINK FENCE, REPLACE WITH NEW CHAIN LINK FENCE WITH 3 STRING BARB WIRE OF THE SAME HEIGHT AS THE EXISTING PER CITY OF RIVERSIDE STD. DWG. NO. 380.
11. K-RAILS, CONCRETE BLOCKS, EQUIPMENT AND OTHER MATERIALS WITHIN EASEMENT AND TEMPORARY CONSTRUCTION EASEMENT TO BE RELOCATED BY OTHERS.
12. PLUG EXISTING EXPOSED 60" RCP WITH CONCRETE BULKHEAD PER STD. DWG. NO. M816.
13. CONSTRUCT 11' OF 60" RCP.
14. CONSTRUCT CONCRETE COLLAR PER STD. DWG. NO. M803 TO JOIN 60" RCP WITH EXISTING STORM DRAIN PER SHEET 11.
15. CONSTRUCT TEMPORARY 6' HIGH CHAIN LINK FENCE ALONG TCE LIMITS AS SHOWN HEREON
16. CONSTRUCT MANHOLE SAFETY LEDGE PER STD. DWG. NO. MH261

EXISTING UTILITIES NOTE

IT IS THE CONTRACTOR'S RESPONSIBILITY TO POTHOLE AND VERIFY LOCATION AND ELEVATION OF EXISTING UTILITIES PRIOR TO THE START OF ANY CONSTRUCTION.

P8\213407

CITY OF RIVERSIDE
DWG. D# 877

CONSTRUCTION DRAWING SET DATED AUGUST 1, 2016

Don't Dig...Until You Call U.S.A. Toll Free 1-800-227-2600 for the location of buried utility lines. Don't disrupt vital services.
TWO WORKING DAYS BEFORE YOU DIG

BENCHMARK
Z14818
FD PK NAIL, NO TAG, FLUSH AT INTERSECTION OF KANSAS STREET AND SPRUCE STREET.
ELEVATION 889.02

APPROVED BY:
ALBERT A. WEBB ASSOCIATES
ENGINEERING CONSULTANTS
3788 McCRAY STREET
RIVERSIDE CA. 92506
PH. (951) 686-1070
FAX (951) 788-1256
ENGINEER, RCE C67239 — DATE: 08/01/2016

REGISTERED PROFESSIONAL ENGINEER JOSEPH C. CALDWELL NO. C67239 CIVIL STATE OF CALIFORNIA

REF.	DESCRIPTION	APPR.	DATE	APPR.	DATE
1	NOTE REVISION			DG	1/4/19

ENGINEER — RCFC&WCD

RIVERSIDE COUNTY FLOOD CONTROL AND WATER CONSERVATION DISTRICT
RECOMMENDED FOR APPROVAL BY: — DATE: 08/01/2016
APPROVED BY: — DATE: 08/01/2016

CITY OF RIVERSIDE
PUBLIC WORKS OF DEPARTMENT
APPROVAL BY: DEPUTY DIRECTOR/CITY ENGINEER
DATE: 08/01/2016

UNIVERSITY WASH CHANNEL
STAGE 3

STA 17+10 TO 21+00

PROJECT NO. 1-0-0120
DRAWING NO. 1-0714
SHEET NO. 5 OF 17

G:\2013\13-0025\DRAWINGS\DESIGN\13-0025-C-SD.DWG 8/2/2016 9:36 AM

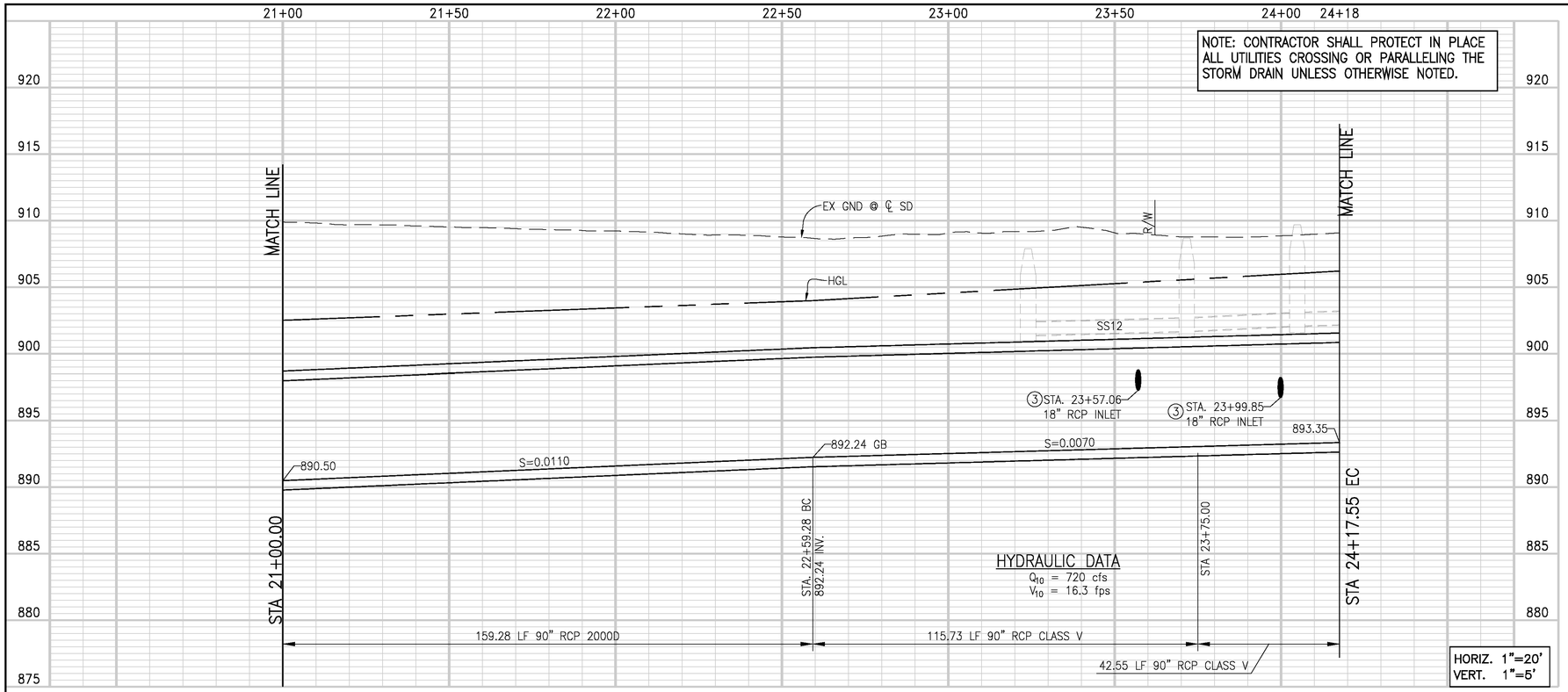

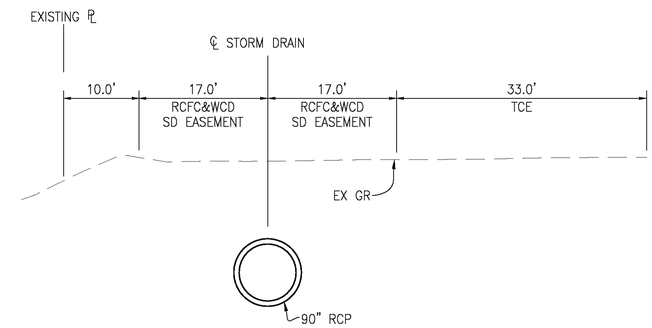

SECTION AT STA 21+50

TYPICAL FROM STA 21+00 TO STA 24+15.67

10' 0 10'

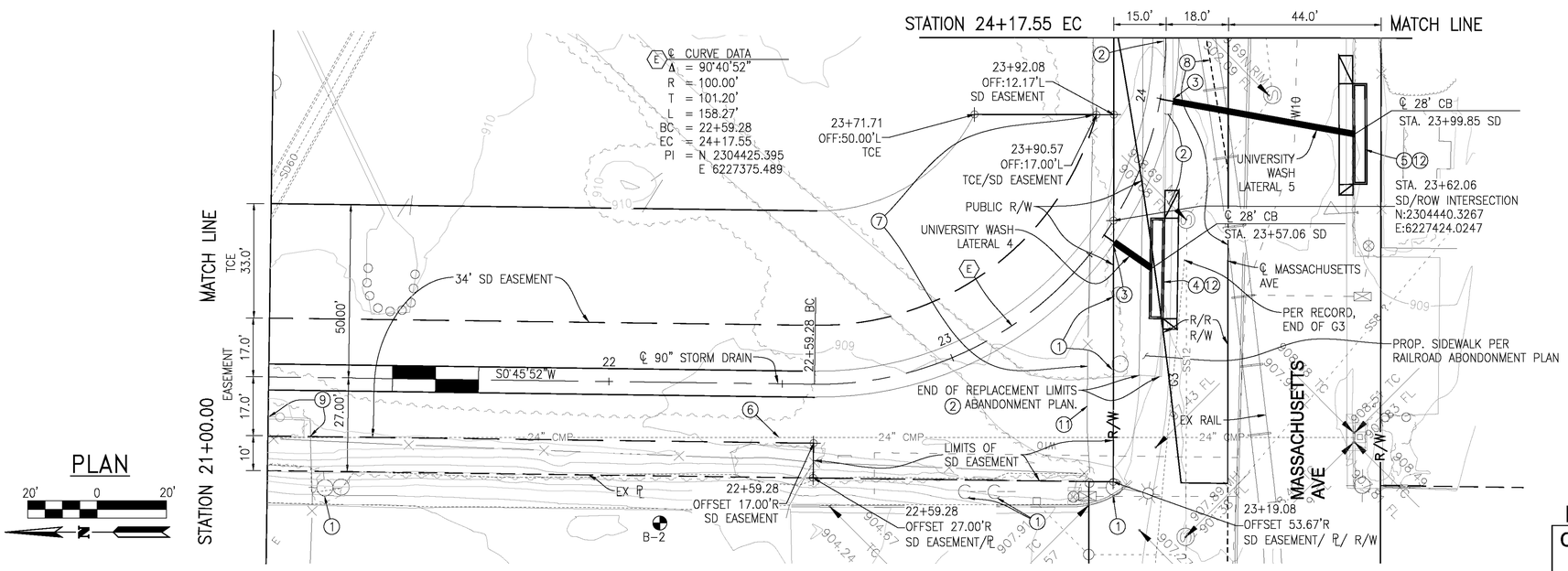

PLAN

20' 0 20'

NOTES

1. PROTECT IN PLACE EXISTING POWER POLE AND APPURTENANT GUY WIRES.
2. REMOVE AND REPLACE INTERFERING PORTIONS OF AC PAVEMENT, SIDEWALK, CURB, AND GUTTER PER CITY OF RIVERSIDE STANDARD DRAWING NO. 200, TYPE 1, 6" CF.
3. CONSTRUCT JS NO.4 PER STD. DWG. NO. JS229.
4. CONSTRUCT CB PER CITY OF RIVERSIDE STD. NO. 405. W=28', 14'-18" RCP CL V. SEE PROFILE, SHEET 11.
5. CONSTRUCT CB PER CITY OF RIVERSIDE STD. NO. 405. W=28', 53'-18" RCP CL V. SEE PROFILE, SHEET 11.
6. PROTECT IN PLACE EXIST. 24" CMP SD.
7. REMOVE CHAIN LINK FENCE WITHIN STORM DRAIN EASEMENT, REPLACE WITH NEW CHAIN LINK FENCE WITH 3 STRING BARB WIRE PER STD. DWG. NO. 380.
8. REMOVE INTERFERING PORTIONS OF BURIED RAILROAD TRACK
9. PROTECT IN PLACE EXISTING BLOCK WALL
10. FOR BEDDING AND PAYLINES SEE SHEET 17.
11. PROTECT EXISTING WROUGHT IRON GATE IN PLACE
12. CONSTRUCT LOCAL DEPRESSION NO. 2 PER STD. DWG. NO. LD201.

EXISTING UTILITIES NOTE

IT IS THE CONTRACTOR'S RESPONSIBILITY TO POTHOLE AND VERIFY LOCATION AND ELEVATION OF EXISTING UTILITIES PRIOR TO THE START OF ANY CONSTRUCTION.

P8\213407

CITY OF RIVERSIDE
DWG. D# 877

Record Drawing

APPROVED BY: DGrun
DATE: 1/4/18

CONSTRUCTION DRAWING SET DATED AUGUST 1, 2016

Don't Dig...Until You Call U.S.A. Toll Free 1-800-227-2600 for the location of buried utility lines. Don't disrupt vital services.

TWO WORKING DAYS BEFORE YOU DIG

BENCHMARK
Z14818
FD PK NAIL, NO TAG, FLUSH AT INTERSECTION OF KANSAS STREET AND SPRUCE STREET.
ELEVATION 889.02

APPROVED BY:
ALBERT A. WEBB ASSOCIATES
ENGINEERING CONSULTANTS
3788 McCRAY STREET
RIVERSIDE, CA. 92506
PH. (951) 686-1070
FAX (951) 788-1256
ENGINEER, RCE C67239
DATE: 08/01/2016

REGISTERED PROFESSIONAL ENGINEER JOSEPH C. CALDWELL NO. C67239 CIVIL STATE OF CALIFORNIA

REF.	DESCRIPTION	APPR.	DATE	APPR.	DATE
	REVISIONS	ENGINEER		RCFC&WCD	

RIVERSIDE COUNTY FLOOD CONTROL AND WATER CONSERVATION DISTRICT
RECOMMENDED FOR APPROVAL BY: DATE: 08/01/2016
APPROVED BY: DATE: 08/01/2016

CITY OF RIVERSIDE
PUBLIC WORKS OF DEPARTMENT
APPROVAL BY: DEPUTY DIRECTOR/CITY ENGINEER
DATE: 08/01/2016

UNIVERSITY WASH CHANNEL
STAGE 3

STA 21+00 TO 24+17.55 EC

PROJECT NO. 1-0-0120
DRAWING NO. 1-0714
SHEET NO. 6 OF 17

G:\2013\13-0025\DRAWINGS\DESIGN\13-0025-C-SD.DWG 8/2/2016 9:36 AM

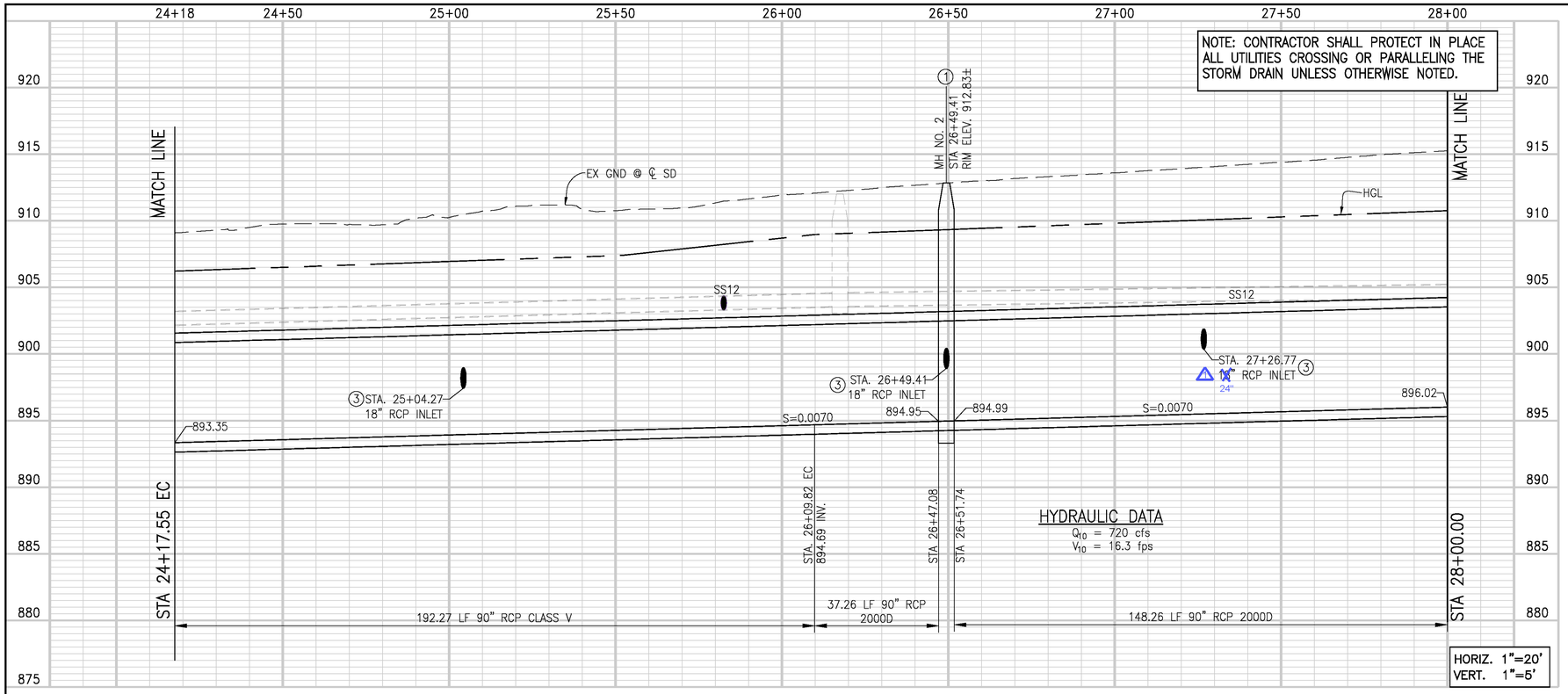

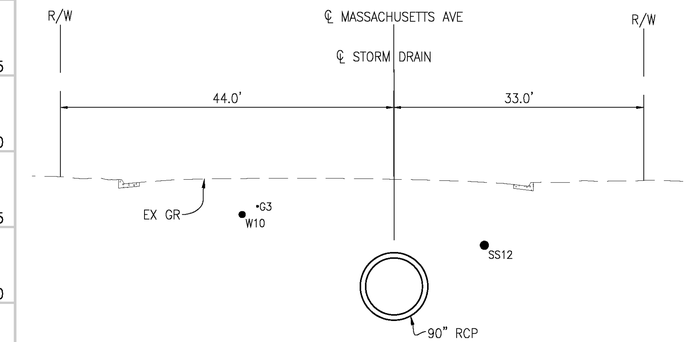

SECTION AT STA 27+00
TYPICAL FROM STA 24+15.67 TO STA 28+00

10' 0 10'

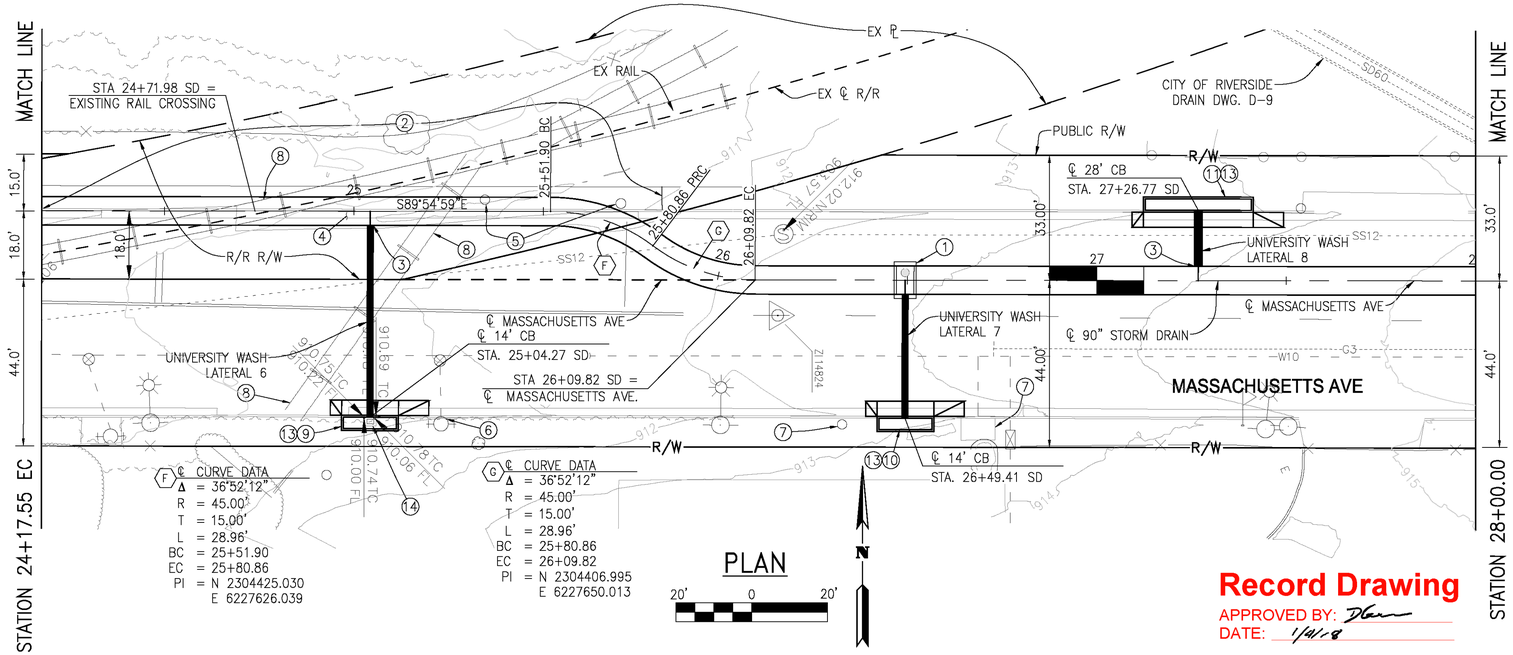

Record Drawing
APPROVED BY: DLam
DATE: 1/4/18

NOTES

1. CONSTRUCT MANHOLE NO. 2 PER STD. DWG. NO. MH252: D1=90", D2=90".
2. REMOVE AND REPLACE INTERFERING PORTIONS OF AC PAVEMENT, SIDEWALK, CURB, AND GUTTER PER CITY OF RIVERSIDE STD. DWG. NO. 200, TYPE 1, 6" CF.
3. CONSTRUCT JS NO. 4 PER STD. DWG. NO. JS229.
4. AFTER INSTALLATION OF STORM DRAIN, REESTABLISH EXISTING LINE AND GRADE OF EDGE OF PAVEMENT PER PAVEMENT PLAN ON SHEET 15.
5. REMOVE, SALVAGE, AND REPLACE EXISTING SIGNS.
6. PROTECT IN PLACE FIRE HYDRANT.
7. PROTECT IN PLACE EXISTING GUY WIRE AND VAULT.
8. REMOVE INTERFERING PORTIONS OF BURIED RAILROAD TRACK.
9. CONSTRUCT CB PER CITY OF RIVERSIDE STD. NO. 405. W=14', 51'-18" RCP CL V. SEE PROFILE, SHEET 13.
10. CONSTRUCT CB PER CITY OF RIVERSIDE STD. NO. 405. W=14', 34'-18" RCP CL IV. SEE PROFILE, SHEET 12.
11. CONSTRUCT CB PER CITY OF RIVERSIDE STD. NO. 405. W=28', 14'-18" RCP CL IV. SEE PROFILE, SHEET 12.

12 FOR BEDDING AND PAYLINES SEE SHEET 17.

13. CONSTRUCT LOCAL DEPRESSION NO. 2 PER STD. DWG. NO. LD201.
14. REMOVE EXISTING CATCH BASIN.

P8\213407

CITY OF RIVERSIDE
DWG. D# 877

EXISTING UTILITIES NOTE
IT IS THE CONTRACTOR'S RESPONSIBILITY TO VERIFY LOCATION AND ELEVATION OF EXISTING UTILITIES PRIOR TO THE START OF ANY CONSTRUCTION.

CONSTRUCTION DRAWING SET DATED AUGUST 1, 2016

Don't Dig...Until You Call U.S.A. Toll Free 1-800-227-2600 for the location of buried utility lines. Don't disrupt vital services.
TWO WORKING DAYS BEFORE YOU DIG

BENCHMARK
Z14818
FD PK NAIL, NO TAG, FLUSH AT INTERSECTION OF KANSAS STREET AND SPRUCE STREET.
ELEVATION 889.02

APPROVED BY:
ALBERT A. WEBB ASSOCIATES
ENGINEERING CONSULTANTS
3788 McCRAY STREET
RIVERSIDE CA. 92506
PH. (951) 686-1070
FAX (951) 788-1256
ENGINEER, RCE 67239 — 08/01/2016 DATE:

REGISTERED PROFESSIONAL ENGINEER JOSEPH C. CALDWELL NO. C67239 CIVIL STATE OF CALIFORNIA

REF.	DESCRIPTION	APPR.	DATE	APPR.	DATE
1	PIPE SIZE CHANGED			RCM	1/4/18

REVISIONS | ENGINEER | RCFC&WCD

RIVERSIDE COUNTY FLOOD CONTROL AND WATER CONSERVATION DISTRICT
RECOMMENDED FOR APPROVAL BY: DATE: 08/01/2016
APPROVED BY: DATE: 08/01/2016

CITY OF RIVERSIDE
PUBLIC WORKS OF DEPARTMENT
APPROVAL BY: DEPUTY DIRECTOR/CITY ENGINEER
DATE: 08/01/2016

UNIVERSITY WASH CHANNEL
STAGE 3

STA 24+17.55 EC TO 28+00

PROJECT NO. 1-0-0120
DRAWING NO. 1-0714
SHEET NO. 7 OF 17

G:\2013\13-0025\DRAWINGS\DESIGN\13-0025-C-SD.DWG 8/2/2016 9:36 AM

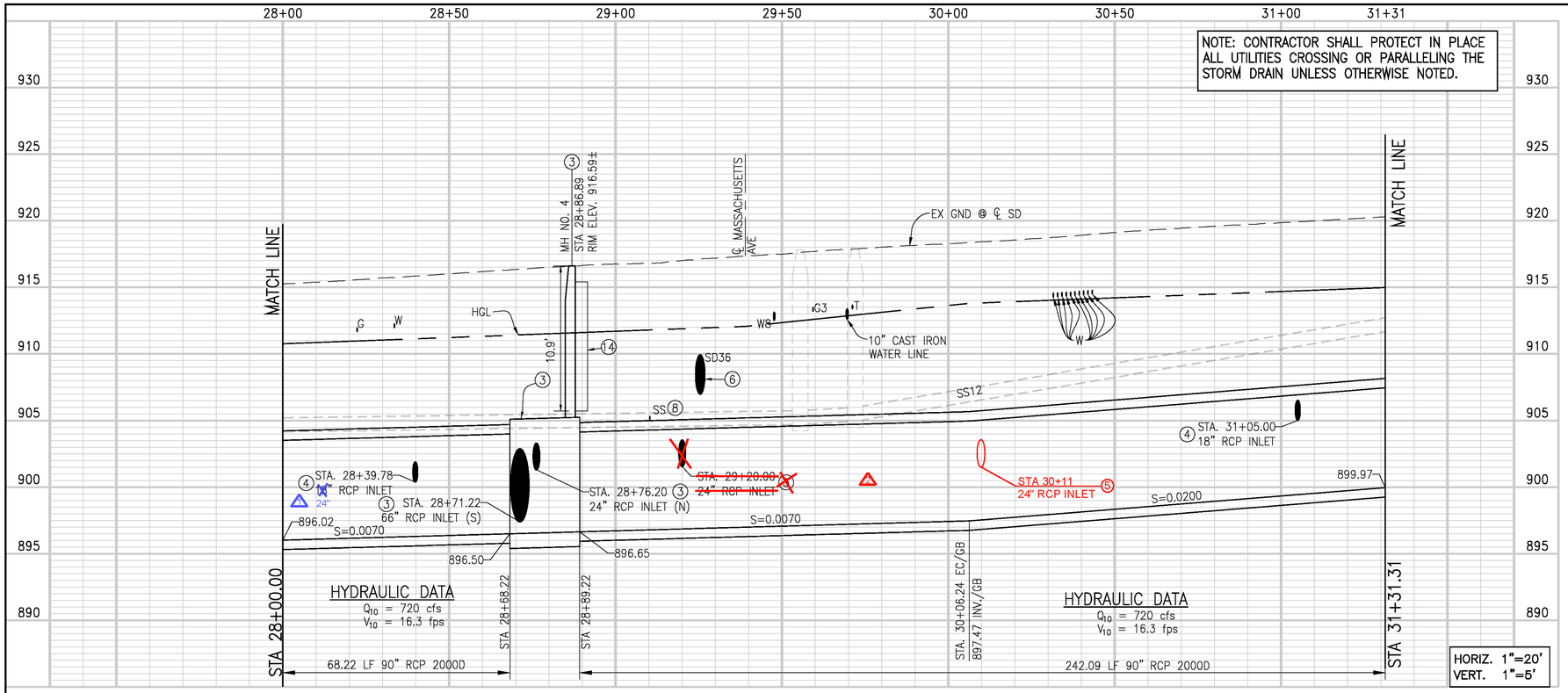

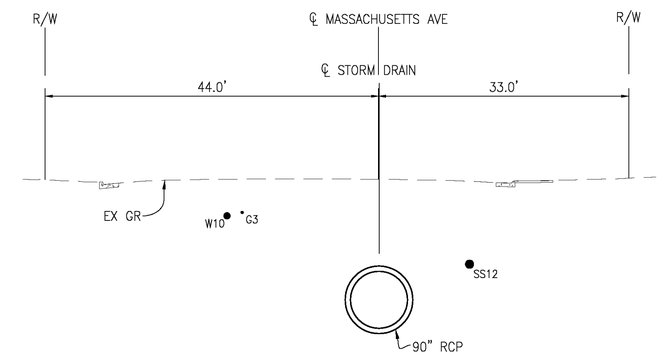

SECTION AT STA 28+50

TYPICAL FROM STA 28+00 TO STA 31+31.31

10' 0 10'

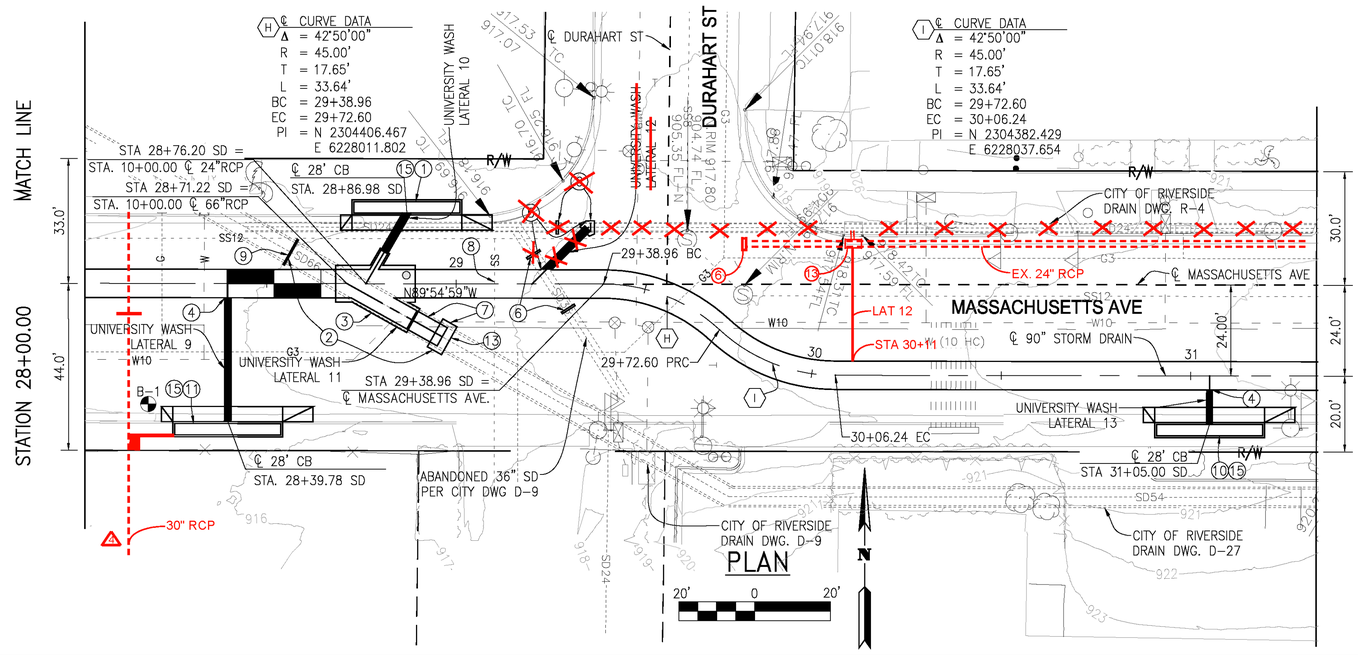

Record Drawing
APPROVED BY: DGam
DATE: 1/4/18

NOTES

1. CONSTRUCT CB PER CITY OF RIVERSIDE STD. NO. 405. W=28', 13'-24" RCP CL IV. SEE PROFILE, SHEET 12.
2. REMOVE AND DISPOSE OF INTERFERING PORTIONS OF EXISTING 66" STORM DRAIN.
3. CONSTRUCT MANHOLE NO. 4 PER STD. DWG. NO. MH254. A_1=29°4'16", B_1=60", C_1=20', R_1=903.75, S_1=897.39, A_2=60°00'00", B_2=24", C_2=10', R_2=904.85, S_2=901.31, D1=90", D2=90". SEE DETAILS ON SHEET 12.
4. CONSTRUCT JS NO.4 PER STD. DWG. NO. JS229.
5. CONSTRUCT JS NO. 4 PER STD. DWG NO. JS229, 24" CONNECTOR PIPE AND JOIN EXISTING 24" STORM DRAIN PER DETAILS ON SHEET 11.
6. REMOVE AND DISPOSE OF INTERFERING PORTIONS OF EXISTING 24" AND 36" STORM DRAIN. PLUG EXPOSED ENDS WITH CONCRETE BULKHEAD PER STD. DWG. NO. M816.
7. CONSTRUCT 66" CONNECTOR PIPE AND CONNECT TO EXISTING 66" STORM DRAIN PER DETAILS ON SHEET 12.
8. MODIFY HOUSE SERVICE SEWER LATERAL PER CITY RIVERSIDE STD. DWG. NO. 554.
9. PLUG EXISTING EXPOSED 66" RCP DOWNSTREAM END WITH CONCRETE BULKHEAD PER STD. DWG. NO. M816.
10. CONSTRUCT CB PER CITY OF RIVERSIDE STD. NO. 405. W=28', 14'-18" RCP CL IV. SEE PROFILE, SHEET 13.
11. CONSTRUCT CB PER CITY OF RIVERSIDE STD. NO. 405. W=28', 35'-~~18~~ 24" RCP CL IV. SEE PROFILE, SHEET 12.

12 FOR BEDDING AND PAYLINES SEE SHEET 17.

13. CONSTRUCT CONCRETE COLLAR PER STD. DWG. NO. M803.
14. CONSTRUCT MANHOLE SAFETY LEDGE PER STD. DWG. NO. MH261
15. CONSTRUCT LOCAL DEPRESSION NO. 2 PER STD. DWG. NO. LD201.
16. CONSTRUCT JS NO. 2 PER RCFC STD JS227.

EXISTING UTILITIES NOTE

IT IS THE CONTRACTOR'S RESPONSIBILITY TO POTHOLE AND VERIFY LOCATION AND ELEVATION OF EXISTING UTILITIES PRIOR TO THE START OF ANY CONSTRUCTION.

CONSTRUCTION DRAWING SET DATED AUGUST 1, 2016

P8\213407

CITY OF RIVERSIDE
DWG. D# 877

Don't Dig...Until You Call U.S.A. Toll Free 1-800-227-2600
for the location of buried utility lines.
Don't disrupt vital services.
TWO WORKING DAYS BEFORE YOU DIG

BENCHMARK
Z14818
FD PK NAIL, NO TAG, FLUSH AT INTERSECTION OF KANSAS STREET AND SPRUCE STREET.
ELEVATION 889.02

APPROVED BY:
ALBERT A. WEBB ASSOCIATES
ENGINEERING CONSULTANTS
3788 McCRAY STREET
RIVERSIDE CA. 92506
PH. (951) 686-1070
FAX (951) 788-1256
ENGINEER, RCE C67239 — DATE: 08/01/2016

REGISTERED PROFESSIONAL ENGINEER JOSEPH C. CALDWELL NO. C67239 CIVIL STATE OF CALIFORNIA

REF.	REVISIONS	ENGINEER		RCFC&WCD	
					DATE
1	PIPE SIZE CHANGED			DGam	1/4/18
2	UPDATE 24" RCP LOCATION			DG	1/4/18
3	NOTE ADDED			DG	1/4/18
4	30" RCP ADDED			DG	1/4/18
	DESCRIPTION	APPR.	DATE	APPR.	

RIVERSIDE COUNTY FLOOD CONTROL AND WATER CONSERVATION DISTRICT
RECOMMENDED FOR APPROVAL BY: DATE: 08/01/2016
APPROVED BY: DATE: 08/01/2016

CITY OF RIVERSIDE
PUBLIC WORKS OF DEPARTMENT
APPROVAL BY: DEPUTY DIRECTOR/CITY ENGINEER
DATE: 08/01/2016

UNIVERSITY WASH CHANNEL
STAGE 3

STA 28+00 TO 31+31.31

PROJECT NO. 1-0-0120
DRAWING NO. 1-0714
SHEET NO. 8 OF 17

G:\2013\13-0025\DRAWINGS\DESIGN\13-0025-C-SD.DWG 8/2/2016 9:36 AM

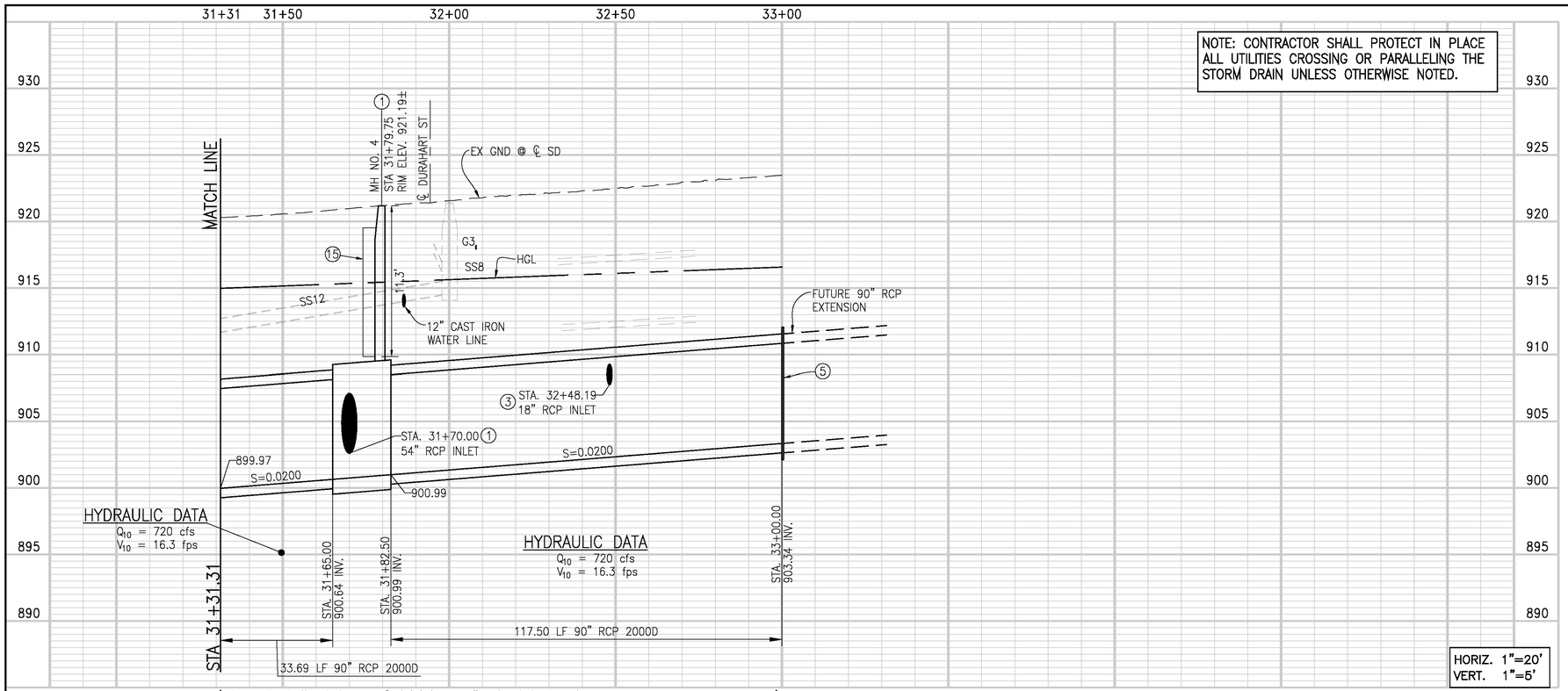

NOTE: CONTRACTOR SHALL PROTECT IN PLACE ALL UTILITIES CROSSING OR PARALLELING THE STORM DRAIN UNLESS OTHERWISE NOTED.

HORIZ. 1"=20'
VERT. 1"=5'

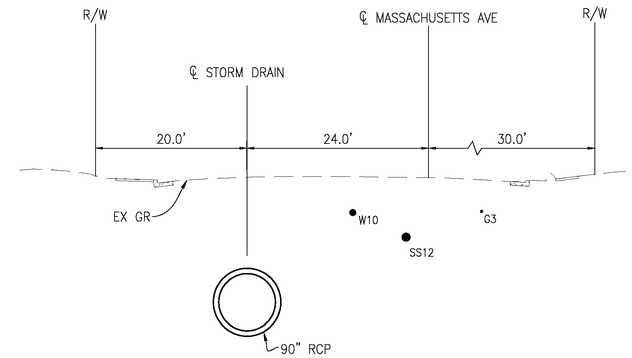

SECTION AT STA 31+40

TYPICAL FROM STA 31+31.31 TO STA 33+00

10' 0 10'

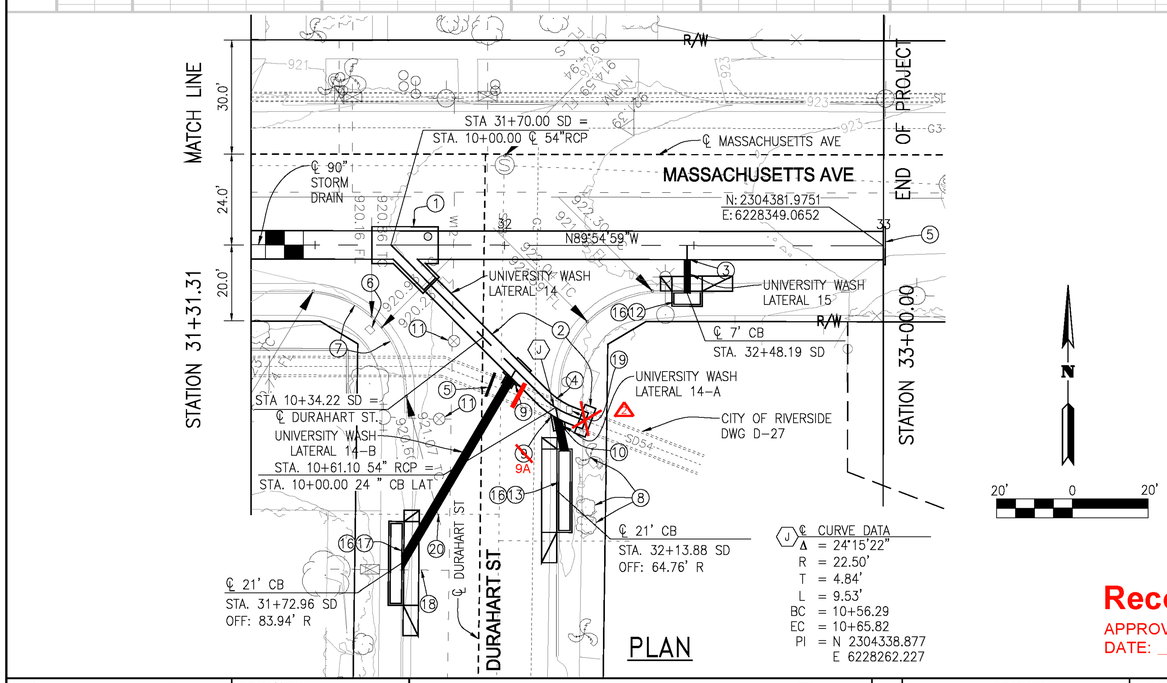

PLAN

℄ CURVE DATA
Δ = 24°15'22"
R = 22.50'
T = 4.84'
L = 9.53'
BC = 10+56.29
EC = 10+65.82
PI = N 2304338.877
E 6228262.227

NOTES

1. CONSTRUCT MANHOLE NO. 4 PER STD. DWG. NO. MH254. A=45°0'00", B=54", C=15', R=903.94, S=902.61, D1=90", D2=90".
2. INSTALL 54" STORM DRAIN AND JOIN EXISTING 54" STORM DRAIN PER DETAILS ON SHEET 13,
3. CONSTRUCT JS NO. 4 PER STD. DWG. NO. JS229.
4. REMOVE AND DISPOSE OF INTERFERING PORTIONS OF EXISTING 54" STORM DRAIN. PLUG EXPOSED (DOWNSTREAM) END WITH CONCRETE BULKHEAD PER STD. DWG. NO. M816.
5. CONSTRUCT CONCRETE BULKHEAD PER STD. DWG. M816.
6. REMOVE TOP 3' OF CATCH BASIN, PLUG CONNECTOR PIPE, AND BACKFILL.
7. SAWCUT CURB AND GUTTER 3' BOTH SIDES OF CATCH BASIN. REMOVE AND REPLACE WITH CITY OF RIVERSIDE STD. 200 TYPE 1, 6" CURB AND GUTTER.
8. PROTECT PARKWAY TREES IN PLACE.
9. CONSTRUCT JS NO. 2 PER STD DWG NO JS227.
9A. CONSTRUCT ~~JS~~ TS NO. ~~2~~ 3 PER STD. DWG. NO. ~~JS227.~~ TS303
10. REMOVE EXISTING INLET AND INTERFERING PORTIONS OF CURB, GUTTER, AND SIDEWALK. REPLACE PER CITY STD. DWG. NO. 200 TYPE 1, 6" CURB AND GUTTER.
11. PROTECT WATER VALVE IN PLACE.
12. CONSTRUCT CB PER CITY OF RIVERSIDE STD. NO. 405. W=7', 12'-18" RCP CL IV. ~~SEE~~ PROFILE, SHEET 13.
13. CONSTRUCT CB PER CITY OF RIVERSIDE STD. NO. 405. W=21', 8'-24" RCP CL IV. SEE PROFILE, SHEET 11.
14. FOR BEDDING AND PAYLINES SEE SHEET 17.
15. CONSTRUCT MANHOLE SAFETY LEDGE PER STD. DWG. NO. MH261
16. CONSTRUCT LOCAL DEPRESSION NO. 2 PER STD. DWG. NO. LD201.
17. CONSTRUCT CB PER CITY OF RIVERSIDE STD. NO. 405. W=21', 55'-24" RCP CL IV. SEE PROFILE, SHEET 12.
18. MODIFY HOUSE WATER SERVICE CONNECTION PER RIVERSIDE PUBLIC UTILITIES STD. DWG. NO. CWD-621-1
19. REMOVE EXISTING CATCH BASIN.
20. MODIFY HOUSE SERVICE SEWER LATERAL PER CITY RIVERSIDE STD. DWG. NO. 554.

Record Drawing
APPROVED BY: DGoun
DATE: 1/4/18

EXISTING UTILITIES NOTE
IT IS THE CONTRACTOR'S RESPONSIBILITY TO VERIFY LOCATION AND ELEVATION OF EXISTING UTILITIES PRIOR TO THE START OF ANY CONSTRUCTION.

P8\213407
CITY OF RIVERSIDE
DWG. D# 877

CONSTRUCTION DRAWING SET DATED AUGUST 1, 2016

Don't Dig...Until You Call U.S.A. Toll Free 1-800-227-2600 for the location of buried utility lines. Don't disrupt vital services.
TWO WORKING DAYS BEFORE YOU DIG

BENCHMARK
Z14818
FD PK NAIL, NO TAG, FLUSH AT INTERSECTION OF KANSAS STREET AND SPRUCE STREET.
ELEVATION 889.02

APPROVED BY:
ALBERT A. WEBB ASSOCIATES
ENGINEERING CONSULTANTS
3788 McCRAY STREET
RIVERSIDE, CA. 92506
PH. (951) 686-1070
FAX (951) 788-1256
ENGINEER, RCE C67239 — DATE: 08/01/2016

REGISTERED PROFESSIONAL ENGINEER JOSEPH C. CALDWELL NO. C67239 CIVIL STATE OF CALIFORNIA

REF.	DESCRIPTION	APPR.	DATE	APPR.	DATE
1	NOTE REVISION			DG	1/4/18
2	BULKHEAD REMOVED			DG	1/4/18

ENGINEER

RIVERSIDE COUNTY FLOOD CONTROL AND WATER CONSERVATION DISTRICT
RECOMMENDED FOR APPROVAL BY: — DATE: 08/01/2016
APPROVED BY: — DATE: 08/01/2016

CITY OF RIVERSIDE
PUBLIC WORKS OF DEPARTMENT
APPROVAL BY: — DEPUTY DIRECTOR/CITY ENGINEER
DATE: 08/01/2016

UNIVERSITY WASH CHANNEL
STAGE 3

STA 31+31.31 TO 33+00

PROJECT NO. 1-0-0120
DRAWING NO. 1-0714
SHEET NO. 9 OF 17

G:\2013\13-0025\DRAWINGS\DESIGN\13-0025-C-SD.DWG 8/2/2016 9:36 AM

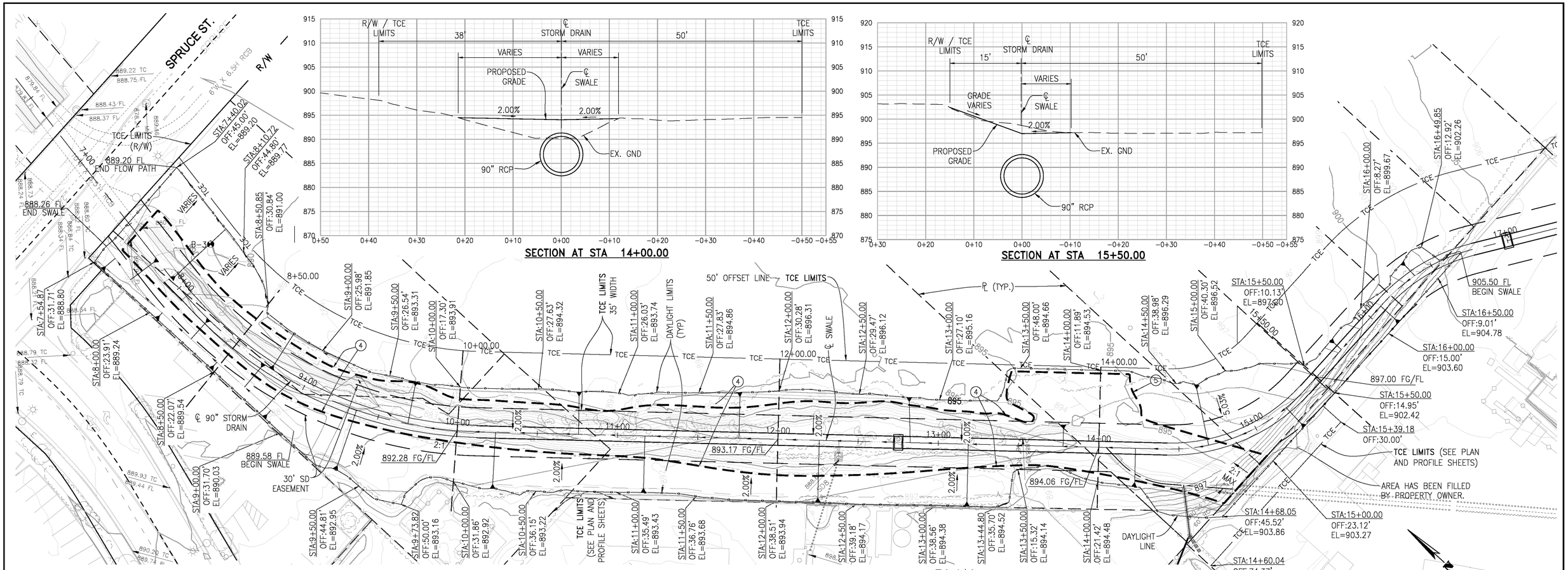

PLAN

NOTES

1. ALL CROSS SECTIONS HEREON TAKEN LOOKING DOWNSTREAM
2. FOR STORM DRAIN, LATERAL, INLETS, AND TCE, SEE PLAN AND PROFILE SHEETS
3. CONTRACTOR TO REMOVE ALL TREES, SHRUBS AND PLANTING WITHIN THE TCE/GRADING LIMITS.
4. REMOVE CONSTRUCTION DEBRIS WITHIN APPROXIMATE LIMITS SHOWN HEREON.
5. REMOVE CRUSHED ASPHALT CONCRETE WITHIN APPROXIMATE LIMITS SHOWN HEREON

SECTION AT STA 14+00.00

SECTION AT STA 15+50.00

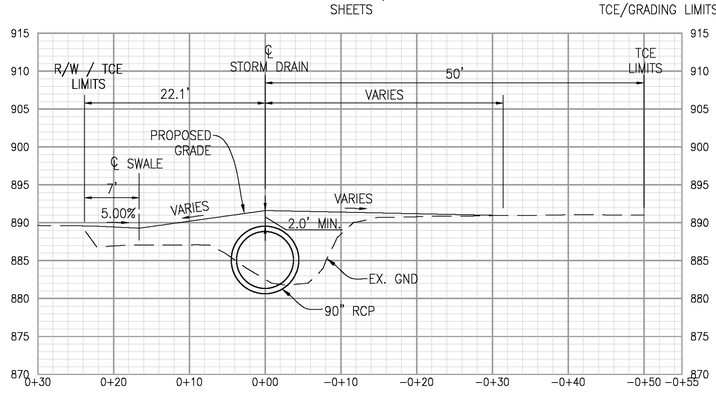

SECTION AT STA 8+50.00

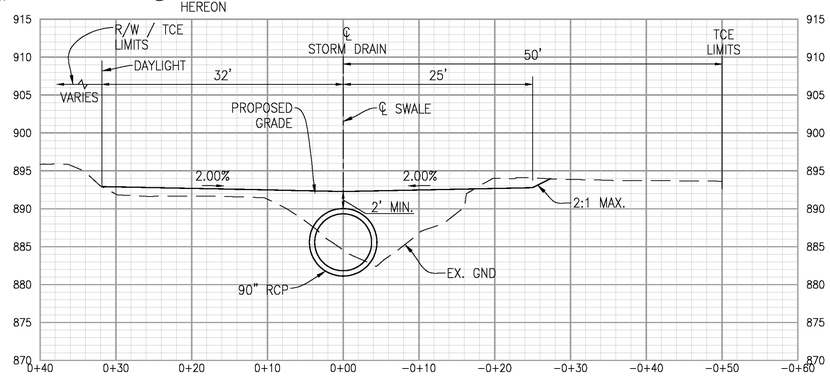

SECTION AT STA 10+00.00

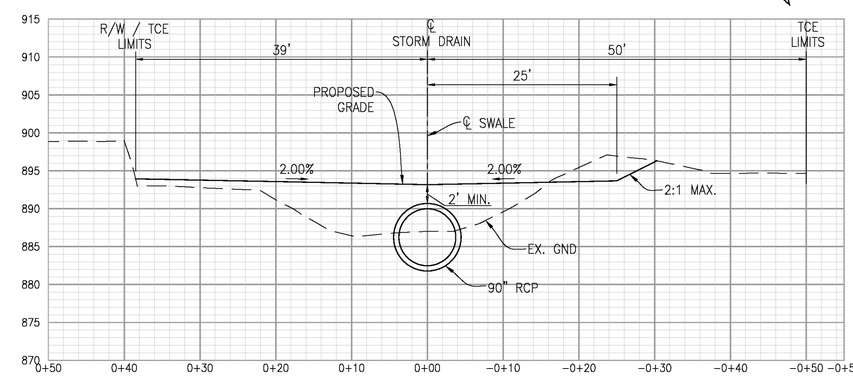

SECTION AT STA 12+00.00

CROSS SECTIONS
1"=10'

P8\213407

CITY OF RIVERSIDE
DWG. D# 877

Record Drawing
APPROVED BY: DGarr
DATE: 1/4/18

CONSTRUCTION DRAWING SET DATED AUGUST 1, 2016

Don't Dig...Until You Call U.S.A. Toll Free 1-800-227-2600
for the location of buried utility lines.
Don't disrupt vital services.
TWO WORKING DAYS BEFORE YOU DIG

BENCHMARK
Z14818
FD PK NAIL, NO TAG, FLUSH AT INTERSECTION OF KANSAS STREET AND SPRUCE STREET.
ELEVATION 889.02

APPROVED BY:
ALBERT A. WEBB ASSOCIATES
ENGINEERING CONSULTANTS
3788 McCRAY STREET
RIVERSIDE CA. 92506
PH. (951) 686-1070
FAX (951) 788-1256
ENGINEER, RCE C67239
08/01/2016
DATE:

REGISTERED PROFESSIONAL ENGINEER JOSEPH C. CALDWELL NO. C67239 CIVIL STATE OF CALIFORNIA

REF.	DESCRIPTION	APPR.	DATE	APPR.	DATE
	REVISIONS	ENGINEER		RCFC&WCD	

RIVERSIDE COUNTY FLOOD CONTROL AND WATER CONSERVATION DISTRICT
RECOMMENDED FOR APPROVAL BY:
DATE: 08/01/2016
APPROVED BY:
DATE: 08/01/2016

CITY OF RIVERSIDE
PUBLIC WORKS OF DEPARTMENT
APPROVAL BY:
DEPUTY DIRECTOR/CITY ENGINEER
DATE: 08/01/2016

UNIVERSITY WASH CHANNEL
STAGE 3

GRADING PLAN

PROJECT NO. 1-0-0120
DRAWING NO. 1-0714
SHEET NO. 10 OF 17

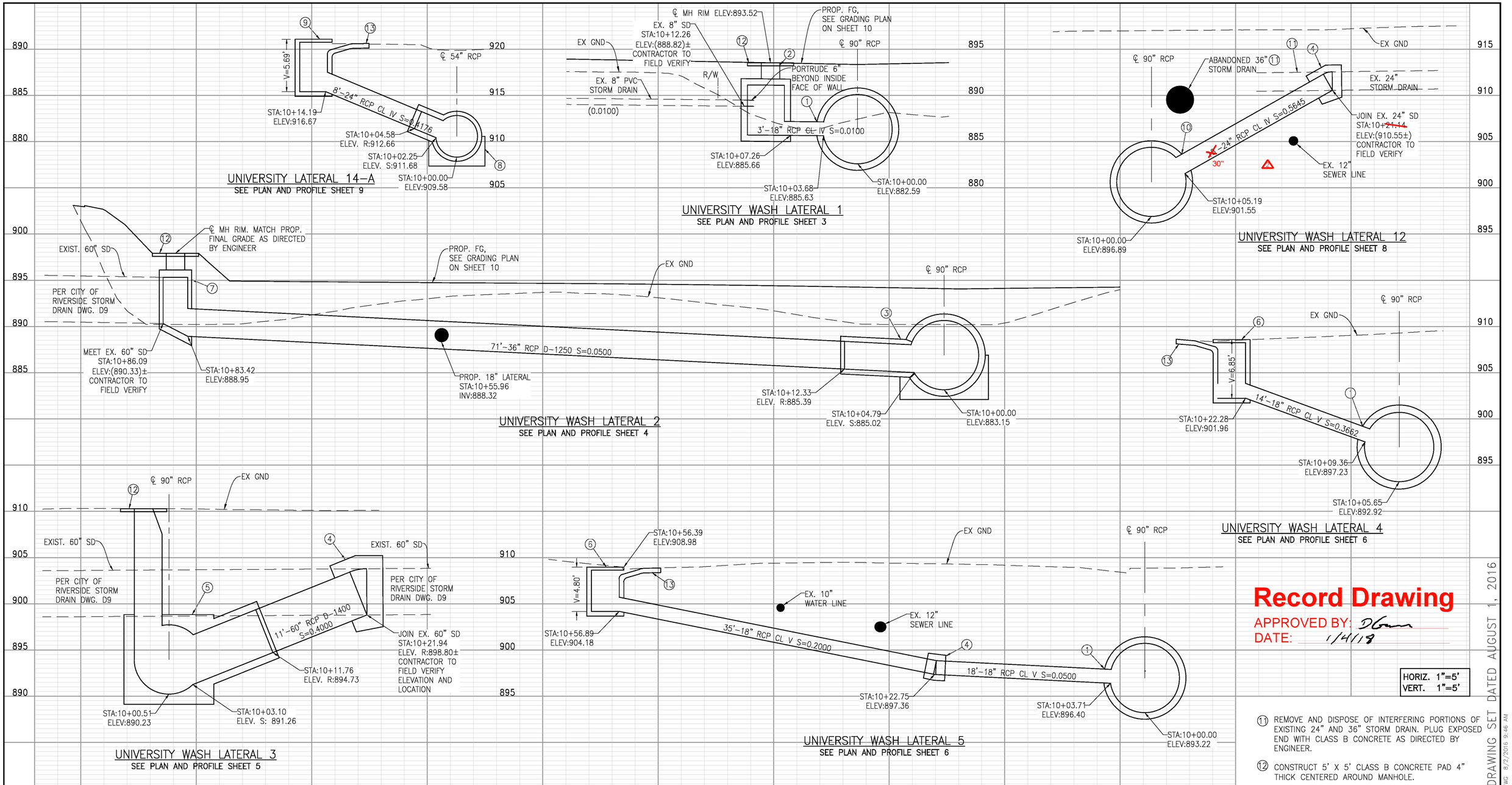

Record Drawing

APPROVED BY: DGam

DATE: 1/4/18

HORIZ. 1"=5'
VERT. 1"=5'

NOTES

1. CONSTRUCT JS NO.4 PER STD. DWG. NO. JS229. A=90°, D=18", ELEV. PER PROFILE.
2. CONSTRUCT PRESSURE MANHOLE NO. 1 PER STD. DWG. NO. MH251: D1=18", D2=8", INSTALL PRESSURE MANHOLE AND SHAFT PER STD. DWG. NO. MH256 AND MH258. TOP STEP SHALL NOT BE INSTALLED.
3. CONSTRUCT JS NO.2 PER STD. DWG. NO. JS227. A=45°, D=36", ELEV. R AND S AS SHOWN.
4. CONSTRUCT CONCRETE COLLAR PER STD. DWG. NO. M803.
5. CONSTRUCT MANHOLE NO. 4 PER STD. DWG. NO. MH254. A=61°36'36", B=60", C-10', D1=90", D2=90", R=894.73, S=891.26.
6. CONSTRUCT CB PER CITY OF RIVERSIDE STD. NO. 405. W=28', D=~~36"~~ 18", C.F.=6", H= AS SHOWN.
7. CONSTRUCT MANHOLE NO. 2 PER STD. DWG. NO. MH252: D1=36", D2=60", SEE PROFILE HEREON.
8. CONSTRUCT JS NO.2 PER STD. DWG. NO. JS227. A=48", D=24", ELEV. R AND S AS SHOWN.
9. CONSTRUCT CB PER CITY OF RIVERSIDE STD. NO. 405. W=21', D=~~36"~~ 24", C.F.=6", H= AS SHOWN.
10. CONSTRUCT JS NO.4 PER STD. DWG. NO. JS229. A=90°, D=24", ELEV. PER PROFILE.
11. REMOVE AND DISPOSE OF INTERFERING PORTIONS OF EXISTING 24" AND 36" STORM DRAIN. PLUG EXPOSED END WITH CLASS B CONCRETE AS DIRECTED BY ENGINEER.
12. CONSTRUCT 5' X 5' CLASS B CONCRETE PAD 4" THICK CENTERED AROUND MANHOLE.
13. CONSTRUCT LOCAL DEPRESSION NO. 2 PER STD. DWG. NO. LD201.

P8\213407

CITY OF RIVERSIDE
DWG. D# 877

EXISTING UTILITIES NOTE
IT IS THE CONTRACTOR'S RESPONSIBILITY TO POTHOLE AND VERIFY LOCATION AND ELEVATION OF EXISTING UTILITIES PRIOR TO THE START OF ANY CONSTRUCTION.

CONSTRUCTION DRAWING SET DATED AUGUST 1, 2016

Don't Dig...Until You Call U.S.A. Toll Free 1-800-227-2600 for the location of buried utility lines. Don't disrupt vital services.
BURIED CABLE
TWO WORKING DAYS BEFORE YOU DIG

BENCHMARK
Z14818
FD PK NAIL, NO TAG, FLUSH AT INTERSECTION OF KANSAS STREET AND SPRUCE STREET.
ELEVATION 889.02

APPROVED BY:
ALBERT A. WEBB ASSOCIATES
ENGINEERING CONSULTANTS
3788 McCRAY STREET
RIVERSIDE CA. 92506
PH. (951) 686-1070
FAX (951) 788-1256
ENGINEER, RCE C67239 — 08/01/2016 DATE:

REGISTERED PROFESSIONAL ENGINEER JOSEPH C. CALDWELL NO. C67239 CIVIL STATE OF CALIFORNIA

REF.	DESCRIPTION	APPR.	DATE	APPR.	DATE
1	PIPE SIZE CHANGE			RM	1/4/18
2	PIPE LENGTH CHANGE			DG	1/4/18

REVISIONS | ENGINEER | RCFC&WCD

RIVERSIDE COUNTY FLOOD CONTROL AND WATER CONSERVATION DISTRICT
RECOMMENDED FOR APPROVAL BY: DATE: 08/01/2016
APPROVED BY: DATE: 08/01/2016

CITY OF RIVERSIDE
PUBLIC WORKS OF DEPARTMENT
APPROVAL BY: DEPUTY DIRECTOR/CITY ENGINEER
DATE: 08/01/2016

UNIVERSITY WASH CHANNEL
STAGE 3

CONNECTOR PIPE PROFILE

PROJECT NO. 1-0-0120
DRAWING NO. 1-0714
SHEET NO. 11 OF 17

G:\2013\13-0025\DRAWINGS\DESIGN\13-0025-C-SD LAT.DWG 8/2/2016 9:46 AM

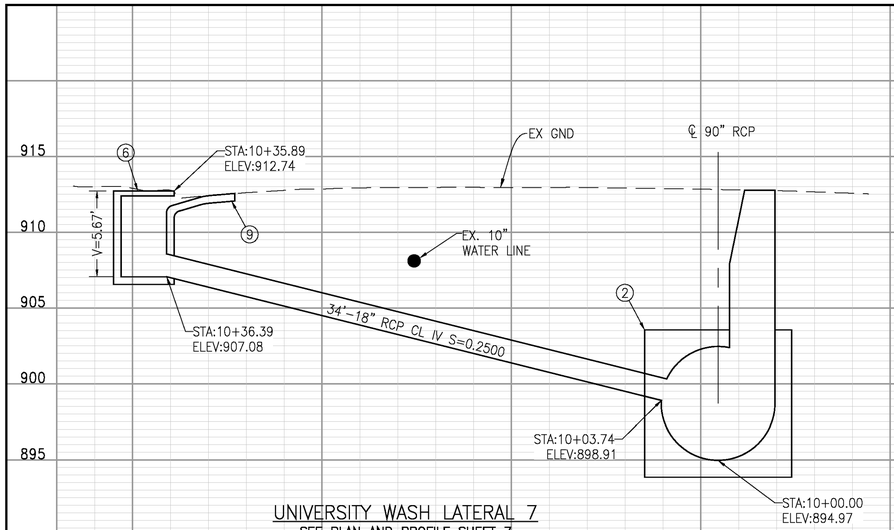

UNIVERSITY WASH LATERAL 7
SEE PLAN AND PROFILE SHEET 7

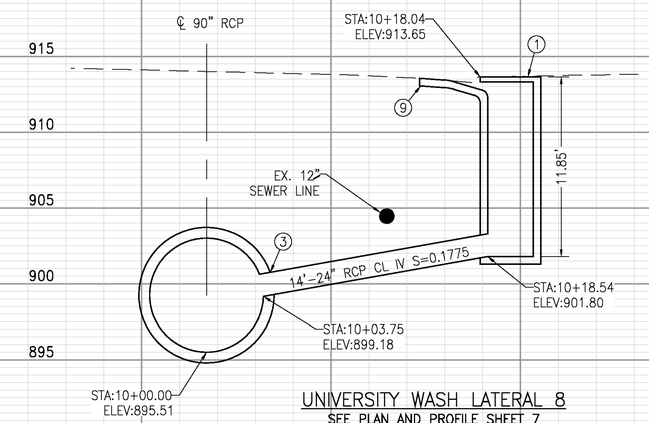

UNIVERSITY WASH LATERAL 8
SEE PLAN AND PROFILE SHEET 7

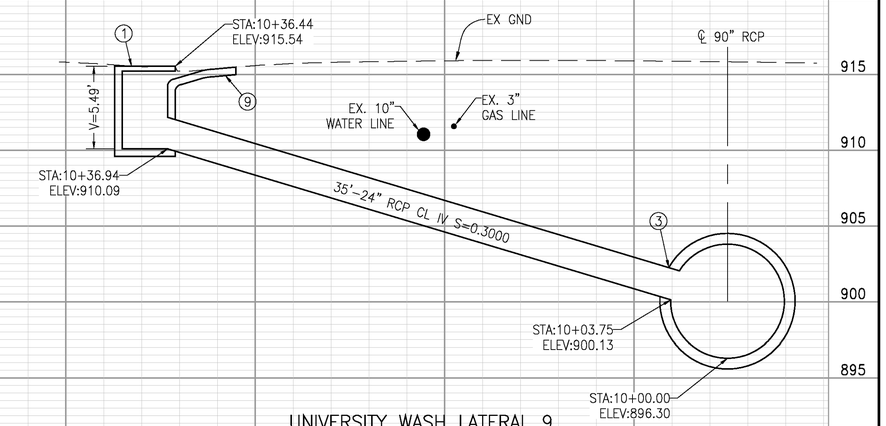

UNIVERSITY WASH LATERAL 9
SEE PLAN AND PROFILE SHEET 8

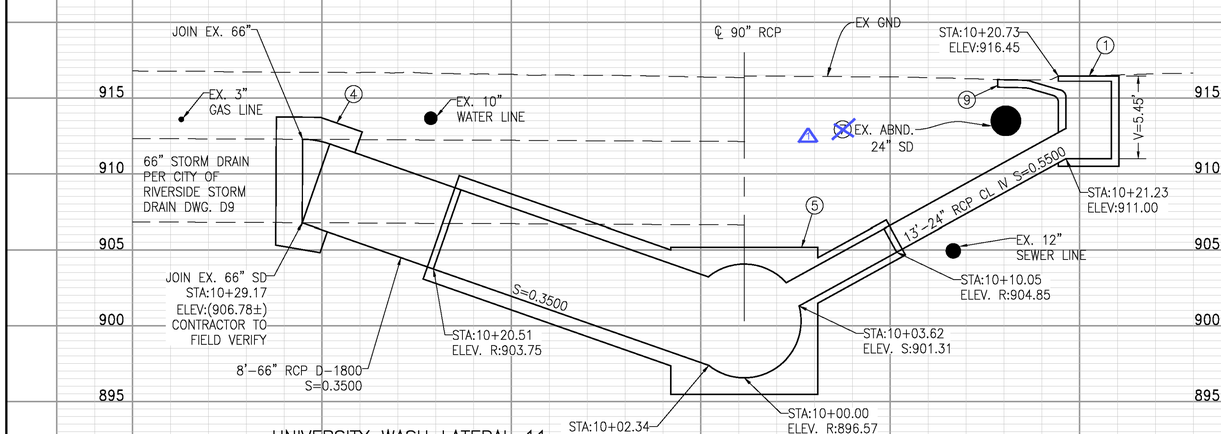

UNIVERSITY WASH LATERAL 11
SEE PLAN AND PROFILE SHEET 8

UNIVERSITY WASH LATERAL 10
SEE PLAN AND PROFILE SHEET 8

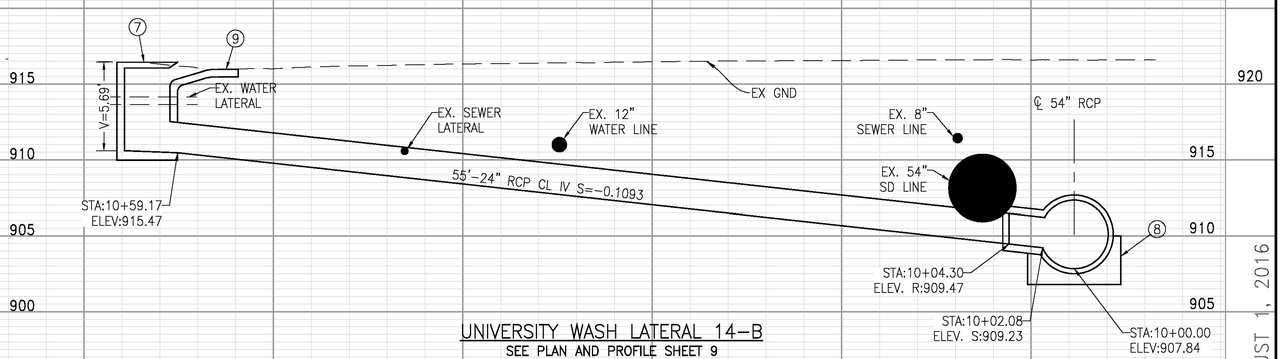

UNIVERSITY WASH LATERAL 14-B
SEE PLAN AND PROFILE SHEET 9

Record Drawing
APPROVED BY: DG
DATE: 1/4/18

HORIZ. 1"=5'
VERT. 1"=5'

NOTES

1. CONSTRUCT CB PER CITY OF RIVERSIDE STD. NO. 405. W=28', D=~~36"~~ 24" C.F.=6", H= AS SHOWN.
2. CONSTRUCT MANHOLE NO. 2 PER STD. DWG. NO. MH252: D1=90", D2=90".
3. CONSTRUCT JS NO.4 PER STD. DWG. NO. JS229. A=90°, D=24", ELEV. S PER PROFILE.
4. CONSTRUCT CONCRETE COLLAR PER STD. DWG. NO. M803.
5. CONSTRUCT MANHOLE NO. 4 PER STD. DWG. NO. MH254. A_1=29°4'16", B_1=60", C_1=20', R_1=903.75, S_1=897.39, A_2=60°00'00", B_2=24", C_2=10', R_2=904.85, S_2=901.31, D1=90", D2=90".
6. CONSTRUCT CB PER CITY OF RIVERSIDE STD. NO. 405. W=14', D=~~36"~~ 18" C.F.=6", H= AS SHOWN.
7. CONSTRUCT CB PER CITY OF RIVERSIDE STD. NO. 405. W=21', D=~~36"~~ 24" C.F.=6", H= AS SHOWN.
8. CONSTRUCT JS NO.2 PER STD. DWG. NO. JS227. A=75.43°, D=24", ELEV. R AND S AS SHOWN.
9. CONSTRUCT LOCAL DEPRESSION NO. 2 PER STD. DWG. NO. LD201.

EXISTING UTILITIES NOTE

IT IS THE CONTRACTOR'S RESPONSIBILITY TO POTHOLE AND VERIFY LOCATION AND ELEVATION OF EXISTING UTILITIES PRIOR TO THE START OF ANY CONSTRUCTION.

P8\213407

CITY OF RIVERSIDE
DWG. D# 877

Don't Dig...Until You Call U.S.A. Toll Free 1-800-227-2600 for the location of buried utility lines. Don't disrupt vital services.
TWO WORKING DAYS BEFORE YOU DIG

BENCHMARK
Z14818
FD PK NAIL, NO TAG, FLUSH AT INTERSECTION OF KANSAS STREET AND SPRUCE STREET.
ELEVATION 889.02

APPROVED BY:
ALBERT A. WEBB ASSOCIATES
ENGINEERING CONSULTANTS
3788 McCRAY STREET
RIVERSIDE, CA. 92506
PH. (951) 686-1070
FAX (951) 788-1256
ENGINEER, RCE C67239
08/01/2016
DATE:

REGISTERED PROFESSIONAL ENGINEER JOSEPH C. CALDWELL NO. C67239 CIVIL STATE OF CALIFORNIA

REF.	DESCRIPTION	APPR.	DATE	APPR.	DATE
1	NOTE DOES NOT APPLY			RCM	1/4/18
2	PIPE SIZE CHANGE			RCM	1/4/18

REVISIONS | ENGINEER | RCFC&WCD

RIVERSIDE COUNTY FLOOD CONTROL AND WATER CONSERVATION DISTRICT
RECOMMENDED FOR APPROVAL BY: DATE: 08/01/2016
APPROVED BY: DATE: 08/01/2016

CITY OF RIVERSIDE
PUBLIC WORKS DEPARTMENT
APPROVAL BY: DEPUTY DIRECTOR/CITY ENGINEER
DATE: 08/01/2016

UNIVERSITY WASH CHANNEL
STAGE 3

CONNECTOR PIPE PROFILE

PROJECT NO. 1-0-0120
DRAWING NO. 1-0714
SHEET NO. 12 OF 17

CONSTRUCTION DRAWING SET DATED AUGUST 1, 2016

G:\2013\13-0025\DRAWINGS\DESIGN\13-0025-C-SD LAT.DWG 8/2/2016 9:46 AM

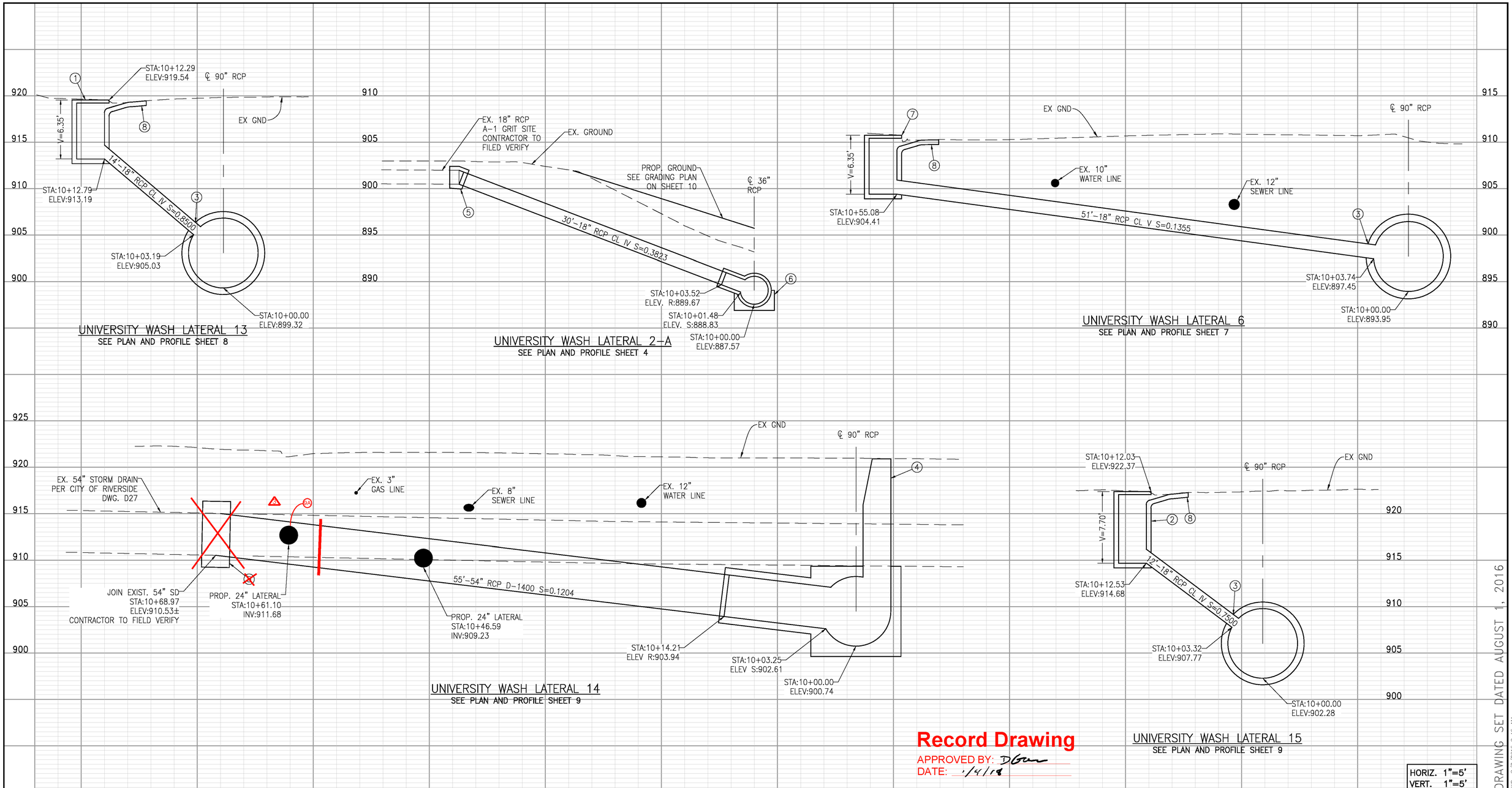

NOTES

1. CONSTRUCT CB PER CITY OF RIVERSIDE STD. NO. 405. W=28', D=~~36"~~ 18" C.F.=6", H= AS SHOWN.
2. CONSTRUCT CB PER CITY OF RIVERSIDE STD. NO. 405. W=7', D=~~36"~~ 18" C.F.=6", H= AS SHOWN.
3. CONSTRUCT JS NO.4 PER STD. DWG. NO. JS229. A=90°, D=18", ELEV. S PER PROFILE.
4. CONSTRUCT MANHOLE NO. 4 PER STD. DWG. NO. MH254
5. CONSTRUCT CONCRETE COLLAR PER STD. DWG. NO. M803.
6. CONSTRUCT JS NO.2 PER STD. DWG. NO. JS227. A=79°, D=18", ELEV. R AND S AS SHOWN.
7. CONSTRUCT CB PER CITY OF RIVERSIDE STD. NO. 405. W=14', D=~~36"~~ 18" C.F.=6", H= AS SHOWN.
8. CONSTRUCT LOCAL DEPRESSION NO. 2 PER STD. DWG. NO. LD201.

9A CONSTRUCT JS NO. 2 PER STD DWG NO JS227.

EXISTING UTILITIES NOTE

IT IS THE CONTRACTOR'S RESPONSIBILITY TO POTHOLE AND VERIFY LOCATION AND ELEVATION OF EXISTING UTILITIES PRIOR TO THE START OF ANY CONSTRUCTION.

P8\213407

CITY OF RIVERSIDE
DWG. D# 877

CONSTRUCTION DRAWING SET DATED AUGUST 1, 2016

Don't Dig...Until You Call U.S.A. Toll Free 1-800-227-2600 for the location of buried utility lines. Don't disrupt vital services.
BURIED CABLE
TWO WORKING DAYS BEFORE YOU DIG

BENCHMARK
Z14818
FD PK NAIL, NO TAG, FLUSH AT INTERSECTION OF KANSAS STREET AND SPRUCE STREET.
ELEVATION 889.02

APPROVED BY:
ALBERT A. WEBB ASSOCIATES
ENGINEERING CONSULTANTS
3788 McCRAY STREET
RIVERSIDE, CA. 92506
PH. (951) 686-1070
FAX (951) 788-1256
ENGINEER, RCE C67239 — DATE: 08/01/2016

REGISTERED PROFESSIONAL ENGINEER JOSEPH C. CALDWELL NO. C67239 CIVIL STATE OF CALIFORNIA

REF.	REVISIONS	ENGINEER		RCFC&WCD	
1	PIPE SIZE CHANGED			RCM	1/4/18
2	CONCRETE COLLAR REMOVED			DG	1/4/18
3	NOTED ADDED			DG	1/4/18
	DESCRIPTION	APPR.	DATE	APPR.	DATE

RIVERSIDE COUNTY FLOOD CONTROL AND WATER CONSERVATION DISTRICT
RECOMMENDED FOR APPROVAL BY: DATE: 08/01/2016
APPROVED BY: DATE: 08/01/2016

CITY OF RIVERSIDE
PUBLIC WORKS OF DEPARTMENT
APPROVAL BY: DEPUTY DIRECTOR/CITY ENGINEER
DATE: 08/01/2016

UNIVERSITY WASH CHANNEL
STAGE 3

CONNECTOR PIPE PROFILE

PROJECT NO. 1-0-0120
DRAWING NO. 1-0714
SHEET NO. 13 OF 17

G:\2013\13-0025\DRAWINGS\DESIGN\13-0025-C-SD LAT.DWG 8/2/2016 9:46 AM

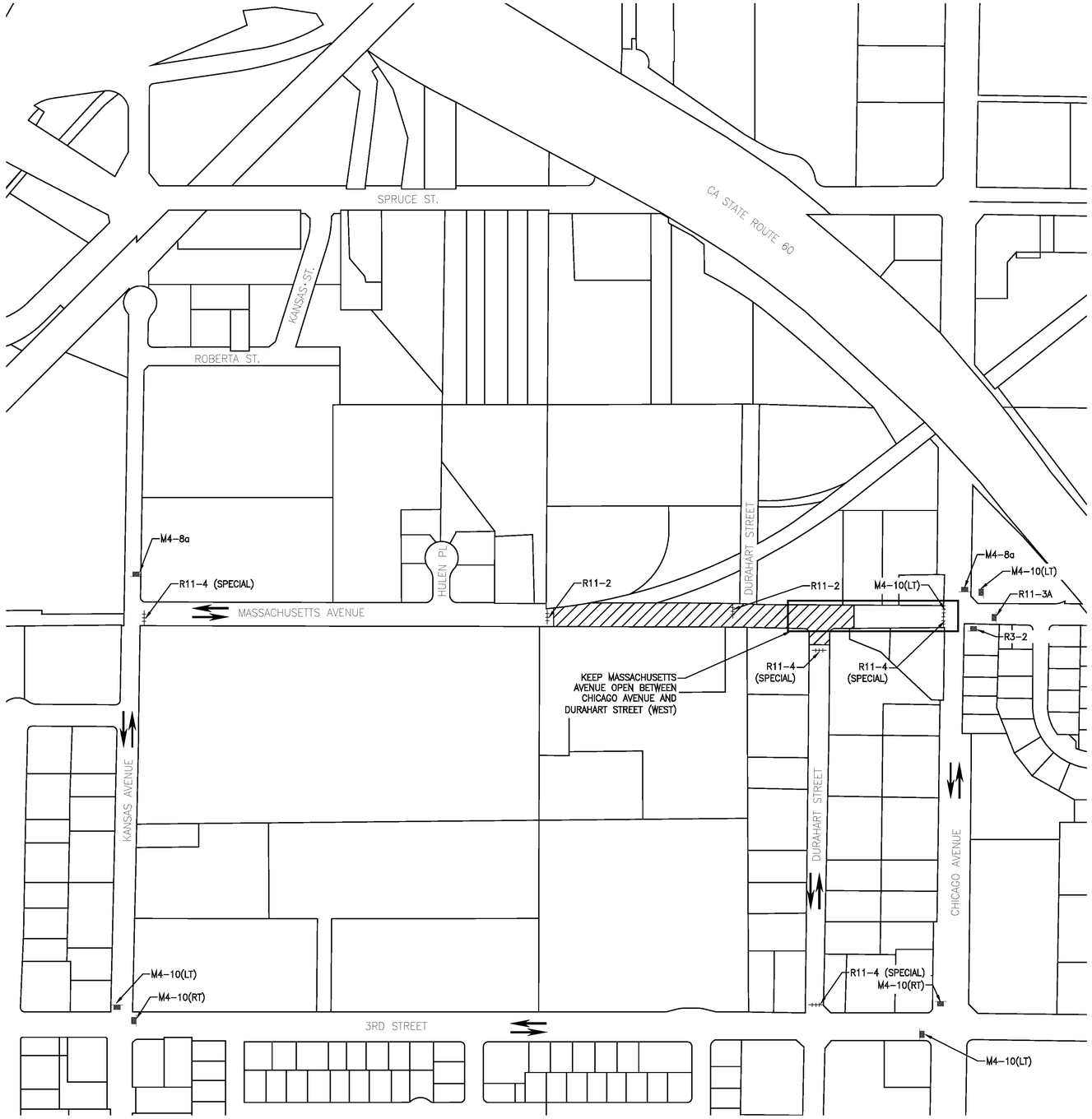

LEGEND

- CONSTRUCTION SIGN
- TYPE III BARRICADE
- DIRECTION OF TRAVEL (NOT PAVEMENT MARKING)
- CONSTRUCTION AREA

M4-8a	END DETOUR
M4-10(RT)	DETOUR (RIGHT TURN)
M4-10(LT)	DETOUR (LEFT TURN)
R3-1	NO RIGHT TURN
R3-2	NO LEFT TURN
R11-2	ROAD CLOSED
R11-3a	ROAD CLOSED AHEAD
R11-4	ROAD CLOSED TO THRU TRAFFIC
R11-4 (SPECIAL)	ROAD CLOSED TO THRU TRAFFIC AND "LOCAL ACCESS ONLY" SIGN UNDERNEATH IT

N

N.T.S.

TRAFFIC CONTROL GENERAL NOTES:

1. ALL TRAFFIC CONTROL FOR CONSTRUCTION SHALL CONFORM TO THE CALIFORNIA MANUAL ON UNIFORM TRAFFIC CONTROL DEVICES (CA MUTCD) ADOPTED 2012, CALTRANS SPECIFICATIONS AND STANDARD PLANS, DATED 2010, AND THE SPECIAL PROVISIONS.
2. LANE CLOSURES SHALL BE AS SHOWN ON THE PLANS OR AS DIRECTED BY THE ENGINEER.
3. ANY PAVEMENT MARKINGS AND STRIPING DAMAGED AND/OR BADLY WORN DURING CONSTRUCTION SHALL BE RESTORED BY THE CONTRACTOR. ALL EXISTING FACILITIES INCLUDING SIGNING, STRIPING, MARKINGS, MARKERS AND SIGNAL SHALL BE RESTORED TO THE ORIGINAL CONDITION AND/OR LOCATION AT THE END OF EACH CONSTRUCTION PERIOD FOR EACH STAGE.
4. IT IS THE RESPONSIBILITY OF THE CONTRACTOR PERFORMING WORK ON A PUBLIC STREET TO INSTALL AND MAINTAIN TRAFFIC CONTROL DEVICES AS SHOWN HEREON, AS WELL AS ANY SUCH ADDITIONAL DEVICES AS MAY BE REQUIRED TO INSURE THE SAFE MOVEMENT OF TRAFFIC AND PEDESTRIANS THROUGH OR AROUND THE WORK AREA. ALL TRAFFIC CONTROL DEVICES SHALL BE KEPT IN THEIR PROPER POSITION AT ALL TIMES, AND SHALL BE REPAIRED. REPLACED OR CLEANED AS NECESSARY TO PRESERVE THEIR APPEARANCE AND CONTINUITY.
5. A MINIMUM OF FIVE FEET OF CLEARANCE SHALL BE MAINTAINED BETWEEN ANY OPEN EXCAVATION AND THE ADJACENT MOVING TRAFFIC LANE. NO OPEN TRENCH ADJACENT TO A TRAFFIC LANE SHALL EXCEED 300 FEET. TEMPORARY CONCRETE BARRIER (TYPE K PER CALTRANS STANDARD PLAN T-3) SHALL BE USED WHENEVER SHOWN ON THE PLANS. THE C27(CA) "OPEN TRENCH' SIGN SHALL BE UTILIZED WHENEVER AN OPEN EXCAVATION AREA EXISTS ADJACENT TO THE TRAVEL WAY.
6. THE CONTRACTOR SHALL COORDINATE THE RELOCATION OF THE BUS ROUTES AND BUS STOPS WITH SAM WATTANACHINDA, RIVERSIDE TRANSIT AGENCY AT (951) 565-5122 THREE WEEKS IN ADVANCE OF CONSTRUCTION ACTIVTYITY AFFECTING BUS STOPS.
7. THE CONTRACTOR SHALL PROVIDE A SAFE AND CONTINUOUS PASSAGE OF LOCAL PEDESTRIAN AND VEHICULAR TRAFFIC AT ALL TIMES.
8. EXACT LOCATION AND TYPE OF CONSTRUCTION SIGNS(S) SHALL BE AS DIRECTED BY THE ENGINEER BASED ON TRAFFIC CONDITIONS.
9. CONSTRUCTION TRUCK TRAFFIC MERGING INTO TRAFFIC LANES SHALL BE BY USE OF FLAGGER AND APPROPRIATE SIGNAGE AS DIRECTED BY THE ENGINEER.
10. TRAFFIC CONES FOR NIGHTTIME USE SHALL HAVE 6/4 RETROREFLECTIVE SLEEVES.
11. WHERE PRACTICAL, CONTRACTOR SHALL REMOVE ALL TRAFFIC CONTROL AND TEMPORARY SIGNING UPON COMPLETION OF DAILY CONSTRUCTION, AND RESTORE SIGNING AND STRIPING, TO CONDITIONS SHOWN AS EXISTING.
12. SEE CALTRANS STANDARD PLANS A20A THRU A20D & A24A THRU A24E FOR STRIPING DETAILS. SEE CALTRANS STANDARD PLANS T1A, T1B, & T2 FOR TEMPORARY CRASH CUSHION ARRAYS.
13. TRAFFIC CONTROL CHANNELIZERS SHALL BE EPOXIED TO THE PAVEMENT. TRAFFIC CONTROL CONES WITH DOUBLE BASES MAY BE USED IN LIEU OF CHANNELIZERS FOR DAILY SHORT TERM (ONE WEEK MAXIMUM) CONSTRUCTION ACTIVITIES.
14. A TRAFFIC CONTROL PERMIT MUST BE OBTAINED BY THE CONTRACTOR AT LEAST 48 HOURS PRIOR TO BEGINNING WORK.
15. CONSTRUCTION ACTNITY WITHIN THE TRAVEL WAY SHALL BE LIMITED TO THE HOURS BETWEEN 9:00 AM AND 3:00 PM. ALL EXCAVATIONS WITHIN THIS AREA SHALL BE COVERED WITH STEEL PLATES FROM 3.00 PM TO 9:00 AM. SEE SPECIAL PROVISIONS FOR THE MINIMUM NUMBER OF LANES TO BE MAINTAINED OPEN. LEFT TURNS MAY BE PROHIBITED DURING INTERSECTION CONSTRUCTION AS DIRECTED BY THE ENGINEER.
16. THESE TRAFFIC CONTROL PLANS SHOW TRAFFIC CONTROL DEVICES FOR LONG TERM TRAFFIC CONTROL FOR CONSTRUCTION LIMITS SHOWN. IT IS THE CONTRACTOR'S RESPONSIBILITY TO CONFORM TO SHORT TERM TRAFFIC CONTROL REQUIREMENTS IN ACCORDANCE WITH CALTRANS "MANUAL OF UNIFORM TRAFFIC CONTROLS". SHORT TERM TRAFFIC CONTROL AND CHANGES TO THESE PLANS DURING CONSTRUCTION SHALL BE SUBMITTED FOR REVIEW AND APPROVAL BY THE CITY OF RIVERSIDE TRAFFIC ENGINEERING DIVISION.
17. USE AND PLACEMENT OF FLASHING ARROW BOARD SIGN(S) SHALL BE AS DIRECTED BY THE ENGINEER. ALL TRAFFIC TRANSITIONS SHALL UTILIZE ARROW BOARDS.
18. FLASHING BEACONS AND/OR WARNING LIGHTS SHALL BE USED WHERE DIRECTED BY THE ENGINEER.
19. CONTRACTOR MAY USE PREFABRICATED REMOVABLE DETOUR STRIPING TAPE, PAVEMENT MARKINGS AND RAISED MARKERS WHERE SHORT TERM USE WILL OCCUR (24 HOURS OR LESS), OR AS SHOWN ON THE PLANS.
20. ALL TRAFFIC SIGNAL MODIFICATION WORK SHALL CONFORM TO CALTRANS STANDARD SPECIFICATIONS AND PLANS, DATED MAY 2006, AND THE SPECIAL PROVISIONS.
21. STEEL PLATES OR A MINIMUM OF 4.1 SLOPE SHALL BE MAINTAINED FOR OPEN EXCAVATIONS DURING NON-WORKING HOURS. "STEEL PLATES AHEAD" SIGNS SHALL BE PROVIDED AT ALL TIMES.
22. ALL CONFLICTING STRIPING, PAVEMENT MARKINGS, AND CURB PAINT SHALL BE REMOVED BY SANDBLASTING, BLACK-OUT METHOD IS NOT PERMITTED. ALL CONFLICTING RAISED PAVEMENT MARKERS SHALL BE REMOVED.
23. CONTRACTOR SHALL MAINTAIN ROADWAY SURFACE IN OPERABLE DRIVING CONDITION AT ALL TIMES. TEMPORARY A.C. PAVEMENT MAY BE REQUIRED IN ORDER TO MAINTAIN TEMPORARY LANES IN ACCEPTABLE CONDITION.
24. TYPE II BARRICADE MOUNTED FLASHING YELLOW LIGHTS SHALL BE PLACED ON TYPE II BARRICADES AT 200' SPACING AS SHOWN ON THE "TYPICAL CHANNELIZER DETAIL" OR AS DIRECTED BY THE ENGINEER.
25. CONTRACTOR SHALL REMOVE OR COVER ALL CONFLICTING SIGNS INCLUDING SIGNS ON THE TRAFFIC SIGNAL MAST ARMS.
26. ONLY ONE STAGE MAY BE DONE AT A TIME. COMPLETE ONE STAGE BEFORE STARTING THE NEXT.
27. CONTRACTOR SHALL COORDINATE WITH THE CITY OF RIVERSIDE TRAFFIC ENGINEERING DEPARTMENT AT (951) 826-6098 A MINIMUM OF FIVE (5) WORKING DAYS PRIOR TO WORK AFFECTING ANY TRAFFIC SIGNAL WITHIN CONSTRUCTION AREA. CONTACT CITY OF RIVERSIDE TRAFFIC ENGINEERING DEPARTMENT FOR TRAFFIC SIGNAL OPERATIONAL CHANGES WHEN TRAFFIC LOOPS ARE DAMAGED OR FOR TRAFFIC CONTROL CONDITIONS NOTED ON THE PLANS.
28. CONTRACTOR SHALL REPLACE ALL CONTRACTOR DAMAGED TRAFFIC FACILITIES INCLUDING CONDUIT, CONDUCTORS, PULL BOXES AND LOOP DETECTORS. AT LOCATIONS WHERE THE EXISTING LOOP DETECTORS WILL BE AFFECTED OR DAMAGED BY THE PROPOSED WORK. LOOPS SHALL BE REPLACED WITHIN FIVE (5) WORKING DAYS OR AS DETERMINED BY THE ENGINEER. IN LIEU OF INSTALLING TEMPORARY LOOP DETECTORS, CONTRACTOR MAY PROVIDE AND INSTALL TEMPORARY VIDEO DETECTION SYSTEM FOR THE DURATION OF CONSTRUCTION. VIDEO DETECTION SYSTEM SHALL BE COMPATIBLE WITH THE CITY'S TRAFFIC SIGNAL SYSTEM.

P8\213407

CITY OF RIVERSIDE
DWG. D# 877

CONSTRUCTION DRAWING SET DATED AUGUST 1, 2016

Don't Dig...Until You Call U.S.A. Toll Free 1-800-227-2600
for the location of buried utility lines.
Don't disrupt vital services.
BURIED CABLE
TWO WORKING DAYS BEFORE YOU DIG

BENCHMARK
Z14818
FD PK NAIL, NO TAG, FLUSH AT INTERSECTION OF KANSAS STREET AND SPRUCE STREET.
ELEVATION 889.02

APPROVED BY:
ALBERT A. WEBB ASSOCIATES
ENGINEERING CONSULTANTS
3788 McCRAY STREET
RIVERSIDE CA. 92506
PH. (951) 686-1070
FAX (951) 788-1256
ENGINEER, RCE C67239 — DATE: 08/01/2016

REGISTERED PROFESSIONAL ENGINEER — JOSEPH C. CALDWELL — NO. C67239 — CIVIL — STATE OF CALIFORNIA

REF.	REVISIONS	ENGINEER APPR.	ENGINEER DATE	RCFC&WCD APPR.	RCFC&WCD DATE
	DESCRIPTION				

RIVERSIDE COUNTY FLOOD CONTROL AND WATER CONSERVATION DISTRICT
RECOMMENDED FOR APPROVAL BY: DATE: 08/01/2016
APPROVED BY: DATE: 08/01/2016

CITY OF RIVERSIDE
PUBLIC WORKS OF DEPARTMENT
APPROVAL BY: DEPUTY DIRECTOR/CITY ENGINEER
DATE: 08/01/2016

UNIVERSITY WASH CHANNEL
STAGE 3

TRAFFIC CONTROL PLAN

PROJECT NO. 1-0-0120
DRAWING NO. 1-0714
SHEET NO. 14 OF 17

G:\2013\13-0025\DRAWINGS\DESIGN\13-0025-C-TC.DWG 8/2/2016 9:46 AM

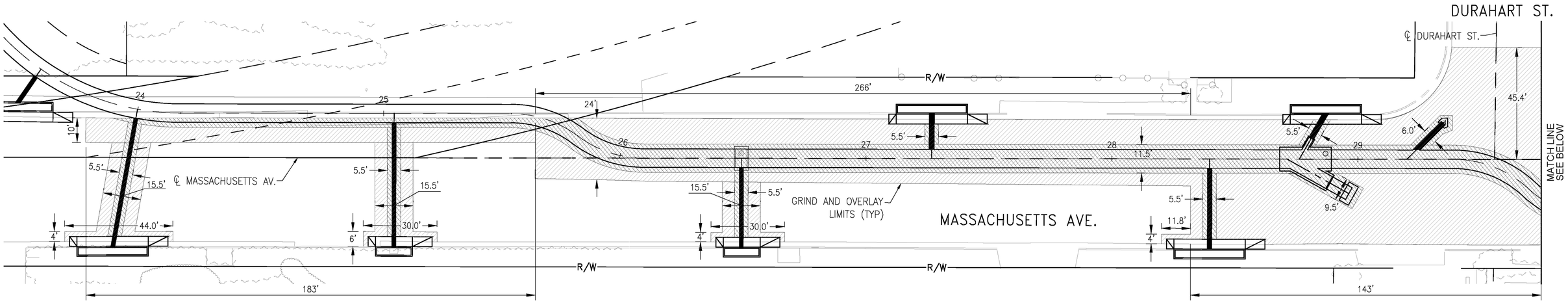

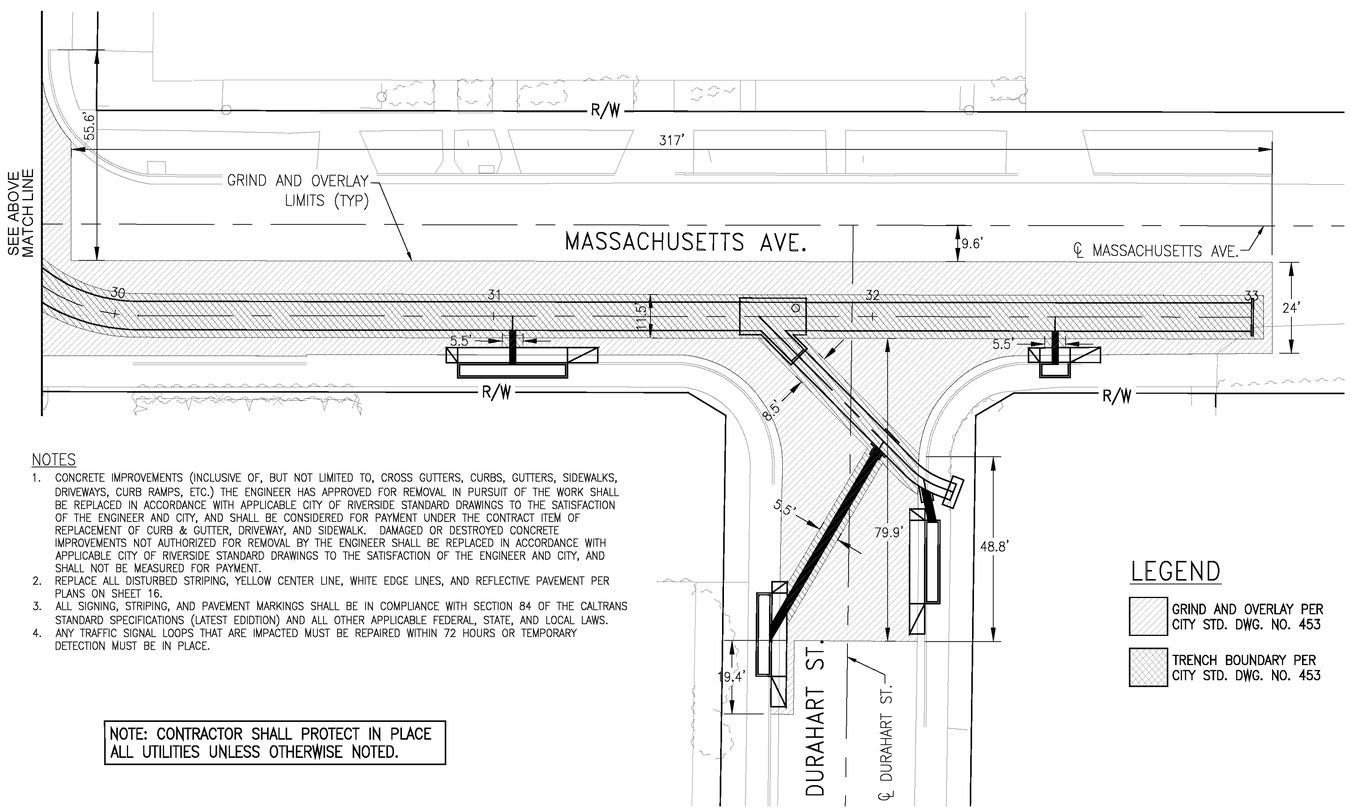

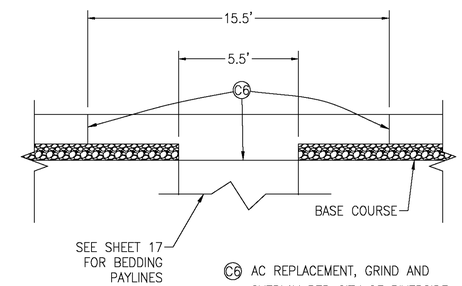

C6 AC REPLACEMENT, GRIND AND OVERLAY PER CITY OF RIVERSIDE STD. PLAN 453. SEE PLAN FOR LIMITS. WIDTH VARIES AS SHOWN IN THE PLANS.

AC REPLACEMENT AND GRIND AND OVERLAY – CONNECTOR PIPES

NTS

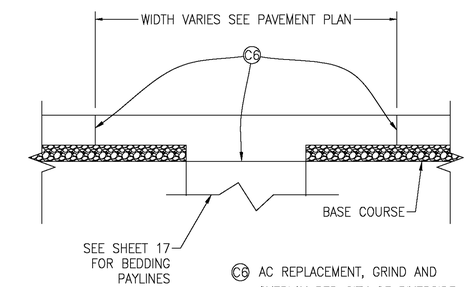

C6 AC REPLACEMENT, GRIND AND OVERLAY PER CITY OF RIVERSIDE STD. PLAN 453. SEE PLAN FOR LIMITS. WIDTH VARIES AS SHOWN IN THE PLANS.

AC REPLACEMENT AND GRIND AND OVERLAY

NTS

NOTES

1. CONCRETE IMPROVEMENTS (INCLUSIVE OF, BUT NOT LIMITED TO, CROSS GUTTERS, CURBS, GUTTERS, SIDEWALKS, DRIVEWAYS, CURB RAMPS, ETC.) THE ENGINEER HAS APPROVED FOR REMOVAL IN PURSUIT OF THE WORK SHALL BE REPLACED IN ACCORDANCE WITH APPLICABLE CITY OF RIVERSIDE STANDARD DRAWINGS TO THE SATISFACTION OF THE ENGINEER AND CITY, AND SHALL BE CONSIDERED FOR PAYMENT UNDER THE CONTRACT ITEM OF REPLACEMENT OF CURB & GUTTER, DRIVEWAY, AND SIDEWALK. DAMAGED OR DESTROYED CONCRETE IMPROVEMENTS NOT AUTHORIZED FOR REMOVAL BY THE ENGINEER SHALL BE REPLACED IN ACCORDANCE WITH APPLICABLE CITY OF RIVERSIDE STANDARD DRAWINGS TO THE SATISFACTION OF THE ENGINEER AND CITY, AND SHALL NOT BE MEASURED FOR PAYMENT.
2. REPLACE ALL DISTURBED STRIPING, YELLOW CENTER LINE, WHITE EDGE LINES, AND REFLECTIVE PAVEMENT PER PLANS ON SHEET 16.
3. ALL SIGNING, STRIPING, AND PAVEMENT MARKINGS SHALL BE IN COMPLIANCE WITH SECTION 84 OF THE CALTRANS STANDARD SPECIFICATIONS (LATEST EDIDTION) AND ALL OTHER APPLICABLE FEDERAL, STATE, AND LOCAL LAWS.
4. ANY TRAFFIC SIGNAL LOOPS THAT ARE IMPACTED MUST BE REPAIRED WITHIN 72 HOURS OR TEMPORARY DETECTION MUST BE IN PLACE.

NOTE: CONTRACTOR SHALL PROTECT IN PLACE ALL UTILITIES UNLESS OTHERWISE NOTED.

LEGEND

- GRIND AND OVERLAY PER CITY STD. DWG. NO. 453
- TRENCH BOUNDARY PER CITY STD. DWG. NO. 453

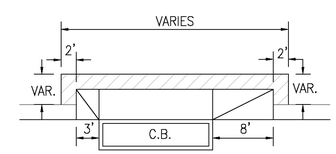

TYPICAL

PAVING PLAN

N

20' 0 20'

Record Drawing

APPROVED BY: D Gann

DATE: 1/4/18

P8\213407

CITY OF RIVERSIDE
DWG. D# 877

CONSTRUCTION DRAWING SET DATED AUGUST 1, 2016

C:\2013\13-0025\DRAWINGS\DESIGN\13-0025-C-PP.DWG 8/2/2016 9:48 AM

Don't Dig...Until You Call U.S.A. Toll Free 1-800-227-2600 for the location of buried utility lines. Don't disrupt vital services. TWO WORKING DAYS BEFORE YOU DIG

BENCHMARK
Z14818
FD PK NAIL, NO TAG, FLUSH AT INTERSECTION OF KANSAS STREET AND SPRUCE STREET.
ELEVATION 889.02

APPROVED BY:
ALBERT A. WEBB ASSOCIATES
ENGINEERING CONSULTANTS
3788 McCRAY STREET
RIVERSIDE CA. 92506
PH. (951) 686-1070
FAX (951) 788-1256
ENGINEER, RCE C67239 — DATE: 08/01/2016

REGISTERED PROFESSIONAL ENGINEER JOSEPH C. CALDWELL NO. C67239 CIVIL STATE OF CALIFORNIA

REF.	DESCRIPTION	APPR.	DATE	APPR.	DATE
	REVISIONS	ENGINEER		RCFC&WCD	

RIVERSIDE COUNTY FLOOD CONTROL AND WATER CONSERVATION DISTRICT
RECOMMENDED FOR APPROVAL BY: — DATE: 08/01/2016
APPROVED BY: — DATE: 08/01/2016

CITY OF RIVERSIDE
PUBLIC WORKS OF DEPARTMENT
APPROVAL BY: — DEPUTY DIRECTOR/CITY ENGINEER
DATE: 08/01/2016

UNIVERSITY WASH CHANNEL
STAGE 3

PAVING PLAN

PROJECT NO. 1-0-0120
DRAWING NO. 1-0714
SHEET NO. 15 OF 17

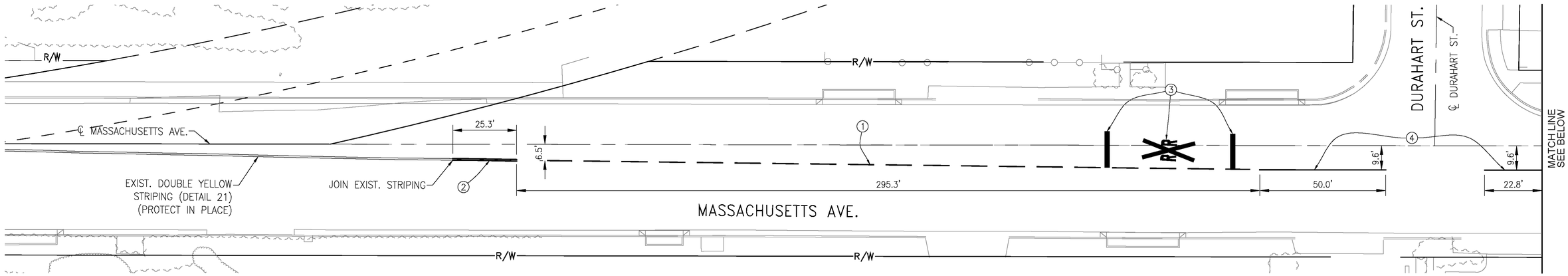

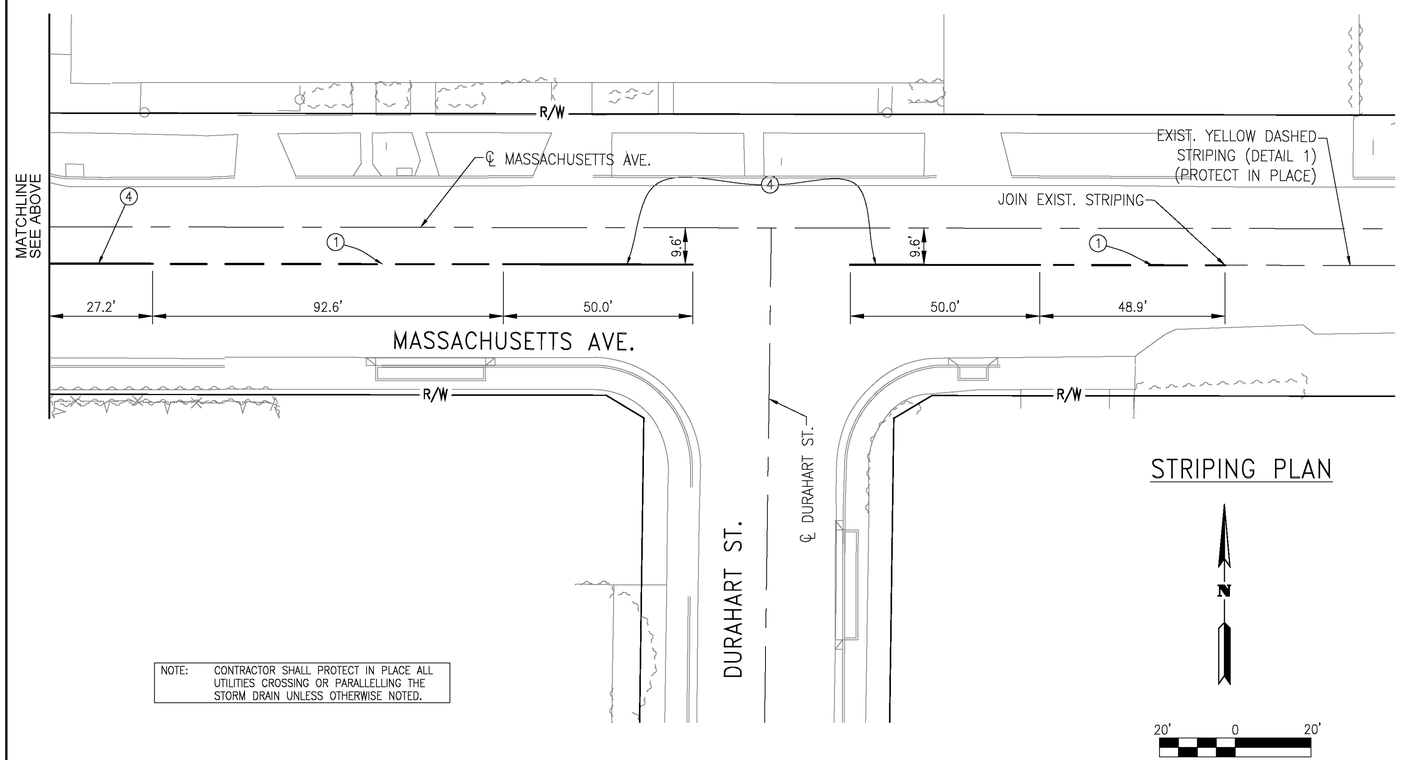

STRIPING PLAN

NOTE: CONTRACTOR SHALL PROTECT IN PLACE ALL UTILITIES CROSSING OR PARALLELLING THE STORM DRAIN UNLESS OTHERWISE NOTED.

GENERAL SIGNING & STRIPING NOTES:

1. ALL MATERIAL AND WORK SHALL CONFORM TO THE LATEST EDITION OF CITY OF RIVERSIDE STANDARD PLANS, CALTRANS STANDARD PLANS AND STANDARD SPECIFICATIONS, AND CALIFORNIA MANUAL ON UNIFORM TRAFFIC CONTROL DEVICES.
2. ALL TRAFFIC STRIPES, PAVEMENT MARKINGS, AND SIGNS SHALL BE REFLECTORIZED AND IN STANDARD SIZE. ALL STRIPING AND MARKING DETAILS SHALL MATCH CALTRANS STANDARD PLANS DETAILS. STENCILS FOR PAVEMENT MARKING SHALL MATCH CALTRANS STANDARD PLANS.
3. THE CONTRACTOR SHALL REMOVE ALL CONFLICTING STRIPES, PAVEMENT MARKINGS, AND RAISED PAVEMENT MARKERS IN ACCORDANCE WITH THE PLANS AND AS DIRECTED BY THE ENGINEER. WORD OR SYMBOL PAVEMENT MARKINGS SHALL BE REMOVED BY SANDBLASTING OR GRINDING A RECTANGULAR AREA COVERING THE WHOLE MARKING.
4. ALL CROSSWALKS SHALL HAVE 10 FEET IN BETWEEN THE 12–INCH WHITE OR YELLOW STRIPES.
5. ALL DOUBLE YELLOW STRIPES SHALL HAVE 3–INCH PAINTED BLACK LINE SEPARATING THE YELLOW STRIPES.
6. THE CONTRACTOR SHALL FURNISH AND INSTALL ALL TRAFFIC STRIPES, RAISED PAVEMENT MARKERS (RPMS), PAVEMENT MARKINGS, AND SIGNS IN ACCORDANCE WITH THE PLANS AND AS DIRECTED BY THE ENGINEER.
7. ALL PAVEMENT MARKINGS INCLUDING CROSSWALKS, LIMIT LINES, AND STOP BARS SHALL BE APPLIED WITH THERMOPLASTIC MATERIAL. ALL OTHER TRAFFIC STRIPES SHALL BE PAINTED IN TWO COATS.
8. ALL RAISED PAVEMENT MARKERS SHALL BE INSTALLED WITHIN SEVEN WORKING DAYS OF ROADWAY STRIPING. ALL EXISTING RAISED PAVEMENT MARKERS WITHIN THE PROJECT AREA SHALL BE REPLACED IN KIND OR REMOVED IN ACCORDANCE WITH THE PLANS, OR AS DIRECTED BY THE ENGINEER.
9. THE CONTRACTOR SHALL INSTALL STANDARD SIZE SIGN PANEL ON 2" SQUARE PERFORATED STEEL TUBE POST WITH TWO PIECE ANCHOR AND SLEEVE, FASTENED WITH 3/8" RIVETS WITH STAINLESS STEEL WASHERS, UNLESS OTHERWISE NOTED. THE EXACT LOCATION OF ALL SIGNS SHALL BE DETERMINED IN THE FIELD BY THE ENGINEER.
10. THE CONTRACTOR SHALL REMOVE SIGNS IN ACCORDANCE WITH THE PLANS AND AS DIRECTED BY THE ENGINEER. THE CONTRACTOR SHALL DELIVER REMOVED SIGNS TO THE COUNTY YARD OR AS DIRECTED BY THE ENGINEER.

CONSTRUCTION NOTES

1. PAINT 4" DASHED YELLOW LANELINE PER CALTRANS PLANS, PLAN NO. A20A, DETAIL 1.
2. PAINT 4" DOUBLE SOLID YELLOW LANELINE PER CALTRANS PLANS, PLAN NO. A20A, DETAIL 21.
3. APPLY THERMOPLASTIC PAVEMENT RAILROAD CROSSING SYMBOL PER CALTRANS STANDARD PLANS, PLAN NO. A24B.
4. PAINT 4" SOLID YELLOW LANELINE

P8\213407

CITY OF RIVERSIDE
DWG. D# 877

Record Drawing
APPROVED BY: D Gomez
DATE: 1/9/18

CONSTRUCTION DRAWING SET DATED AUGUST 1, 2016

Don't Dig...Until You Call U.S.A. Toll Free 1–800–227–2600
for the location of buried utility lines.
Don't disrupt vital services.
TWO WORKING DAYS BEFORE YOU DIG

BENCHMARK
Z14818
FD PK NAIL, NO TAG, FLUSH AT INTERSECTION OF KANSAS STREET AND SPRUCE STREET.
ELEVATION 889.02

APPROVED BY:
ALBERT A. WEBB ASSOCIATES
ENGINEERING CONSULTANTS
3788 McCRAY STREET
RIVERSIDE, CA. 92506
PH. (951) 686–1070
FAX (951) 788–1256
ENGINEER, RCE C67239
08/01/2016
DATE:

REGISTERED PROFESSIONAL ENGINEER JOSEPH C. CALDWELL NO. C67239 CIVIL STATE OF CALIFORNIA

REF.	DESCRIPTION	APPR.	DATE	APPR.	DATE
	REVISIONS	ENGINEER		RCFC&WCD	

RIVERSIDE COUNTY FLOOD CONTROL AND WATER CONSERVATION DISTRICT
RECOMMENDED FOR APPROVAL BY:
DATE: 08/01/2016
APPROVED BY:
DATE: 08/01/2016

CITY OF RIVERSIDE
PUBLIC WORKS OF DEPARTMENT
APPROVAL BY:
DEPUTY DIRECTOR/CITY ENGINEER
DATE: 08/01/2016

UNIVERSITY WASH CHANNEL
STAGE 3

STRIPING PLAN

PROJECT NO. 1–0–0120
DRAWING NO. 1–0714
SHEET NO. 16 OF 17

G:\2013\13–0025\DRAWINGS\DESIGN\13–0025–C–SS.DWG 8/2/2016 9:48 AM

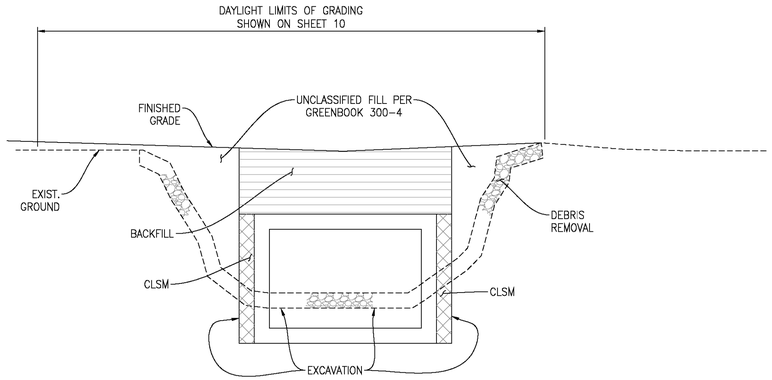

PAYLINES
TYPICAL FROM STA 7+56.61 TO STA 7+91.63

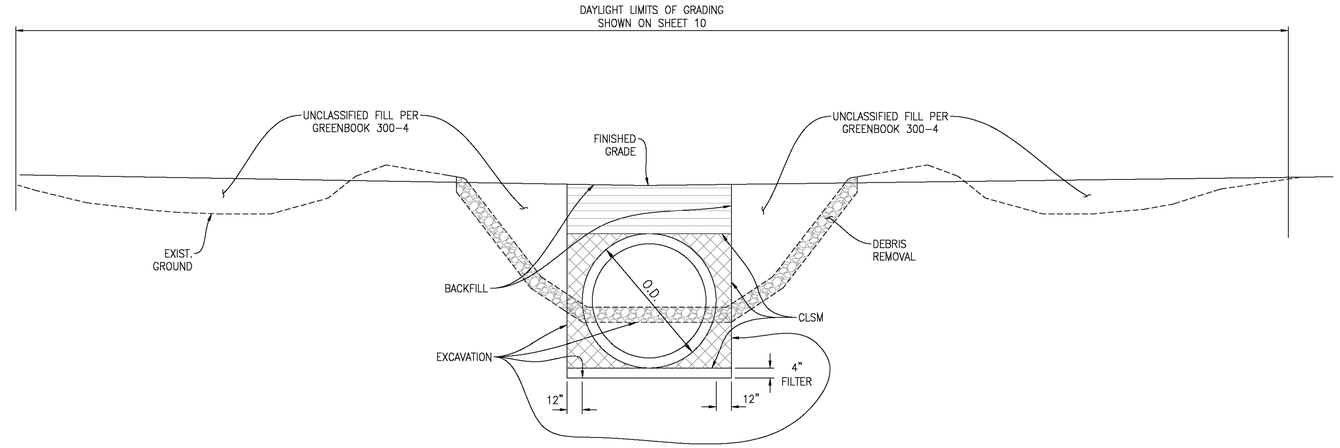

PAYLINES
TYPICAL FROM STA 7+91.63 TO STA 14+75

LEGEND

- BACKFILL
- DEBRIS REMOVAL
- CLSM

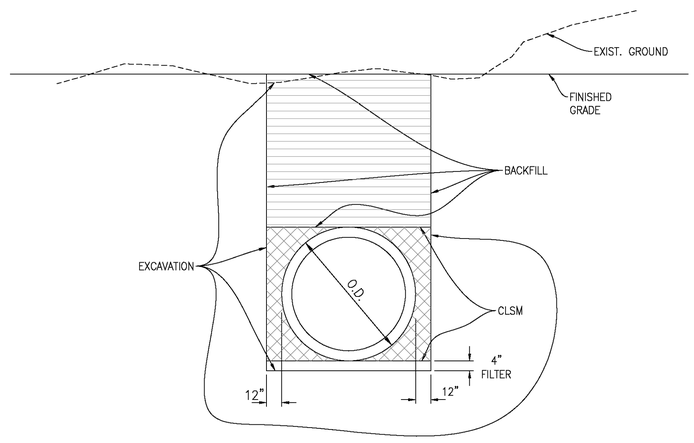

PAYLINES
TYPICAL FROM STA 17+00 TO STA 23+20

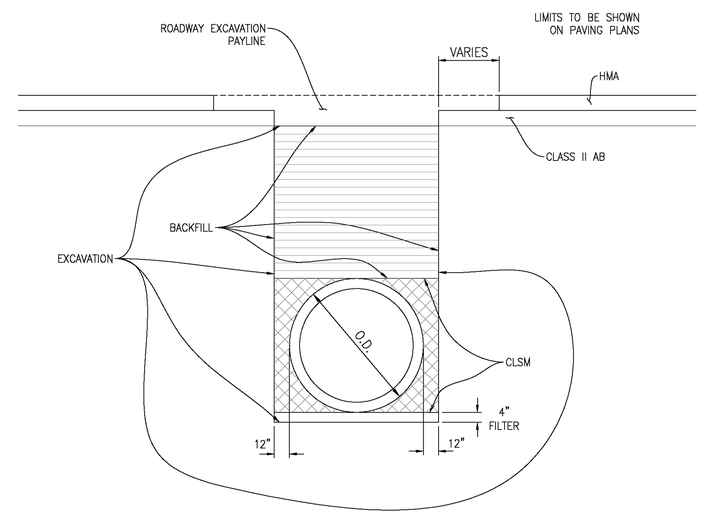

PAYLINES
TYPICAL FROM STA 23+20 TO STA 33+00

P8\213407
CITY OF RIVERSIDE
DWG. D# 877

Record Drawing
APPROVED BY: [signature]
DATE: 1/4/18

CONSTRUCTION DRAWING SET DATED AUGUST 1, 2016

Don't Dig...Until You Call U.S.A. Toll Free
1-800-227-2600
for the location of buried utility lines.
Don't disrupt vital services.
BURIED CABLE
TWO WORKING DAYS BEFORE YOU DIG

BENCHMARK
Z14818
FD PK NAIL, NO TAG, FLUSH AT INTERSECTION OF KANSAS STREET AND SPRUCE STREET.
ELEVATION 889.02

APPROVED BY:
ALBERT A. WEBB ASSOCIATES
ENGINEERING CONSULTANTS
3788 McCRAY STREET
RIVERSIDE CA. 92506
PH. (951) 686-1070
FAX (951) 788-1256
ENGINEER, RCE C67239 — DATE: 08/01/2016

REGISTERED PROFESSIONAL ENGINEER — JOSEPH C. CALDWELL — NO. C67239 — CIVIL — STATE OF CALIFORNIA

REF.	REVISIONS	ENGINEER APPR.	ENGINEER DATE	RCFC&WCD APPR.	RCFC&WCD DATE

RIVERSIDE COUNTY FLOOD CONTROL AND WATER CONSERVATION DISTRICT
RECOMMENDED FOR APPROVAL BY: [signature] DATE: 08/01/2016
APPROVED BY: [signature] DATE: 08/01/2016

CITY OF RIVERSIDE
PUBLIC WORKS DEPARTMENT
APPROVAL BY: [signature]
DEPUTY DIRECTOR/CITY ENGINEER
DATE: 08/01/2016

UNIVERSITY WASH CHANNEL
STAGE 3

BEDDING AND PAYLINE SECTIONS

PROJECT NO. 1-0-0120
DRAWING NO. 1-0714
SHEET NO. 17 OF 17

G:\2013\13-0025\DRAWINGS\DESIGN\13-0025-C-SD.DWG 8/2/2016 11:02 AM