CITY OF RIVERSIDE, CALIFORNIA
PRIVATE STORM DRAIN CONSTRUCTION PLANS

FOR THE CONSTRUCTION OF

PRIMROSE RESIDENTIAL
TRACT NO. 37219

GENERAL NOTES:

1. NO PERSON SHALL PERFORM ANY CONSTRUCTION ACTIVITY OR INSTALL ANY OBJECTS WITHIN THE PUBLIC RIGHTS-OF-WAY OR EASEMENTS OF THE CITY OF RIVERSIDE WITHOUT A VALID CONSTRUCTION PERMIT OR, A STREET OPENING PERMIT OR AN ENCROACHMENT PERMIT ISSUED BY THE CITY'S PUBLIC WORKS DEPARTMENT.
2. IT SHALL BE THE RESPONSIBILITY OF THE CONTRACTOR TO CLEAR THE RIGHT OF WAY IN ACCORDANCE WITH THE PROVISIONS OF LAW AS IT AFFECTS EACH UTILITY INCLUDING IRRIGATION LINES AND APPURTENANCES AND AT NO COST TO THE CITY.
3. CONSTRUCTION SHALL BE IN ACCORDANCE WITH THE CITY OF RIVERSIDE DEPARTMENT OF PUBLIC WORKS, STANDARD DRAWINGS, ITS SUPPLEMENTAL NOTES AND THE STANDARD SPECIFICATIONS FOR PUBLIC WORKS CONSTRUCTION, CURRENT EDITION.
4. THE PRIVATE ENGINEER SIGNING THESE PLANS IS RESPONSIBLE FOR ASSURING THE ACCURACY AND ACCEPTABILITY OF THE WORK HEREON. IN THE EVENT OF DISCREPANCIES ARISING DURING CONSTRUCTION, THE PRIVATE ENGINEER SHALL BE RESPONSIBLE FOR DETERMINING AN ACCEPTABLE SOLUTION AND REVISING THE PLANS FOR APPROVAL BY THE CITY (THIS NOTE REQUIRED ON ALL PLANS.)
5. QUANTITIES SHOWN ARE FOR INFORMATION ONLY AND THE CITY OF RIVERSIDE IS NOT RESPONSIBLE FOR THEIR ACCURACY.
6. WHEN A PORTION OF THE WORK IS TO BE DONE BY THE CITY, THE DEVELOPER AND/OR CONTRACTOR SHALL GIVE THE CITY 60-DAYS NOTICE SO THAT THE DEVELOPER'S WORK AND THE CITY'S WORK CAN BE PROPERLY COORDINATED. THE DEVELOPER SHALL PREPARE AND COMPACT THE SUBGRADE TO ELEVATIONS WITHIN ± .1' OF THE DESIGN ELEVATIONS AND SHALL BE RESPONSIBLE FOR THE CONDITION OF THE SUBGRADE UNTIL ACCEPTED BY THE CITY. THE DEVELOPER SHALL ALSO BE RESPONSIBLE FOR ANY BARRICADING DURING THIS TIME.
7. THE DEVELOPER AND/OR CONTRACTOR SHALL CONTACT THE PUBLIC WORKS DEPARTMENT 30 DAYS PRIOR TO BEGINNING CONSTRUCTION TO NEGOTIATE THE COST OF THE CITY'S PORTION OF THE WORK.
8. THE DEVELOPER SHALL BE RESPONSIBLE FOR PRESERVING OR RE-ESTABLISHING AND REFERENCING SURVEY MONUMENTS DESTROYED, DISTURBED OR BURIED AS A RESULT OF CONSTRUCTION SHOWN HEREON.
9. ALL FLAGGED ELEVATIONS SHALL BE STAKED IN THE FIELD BY THE PRIVATE ENGINEER.
10. THE CONTRACTOR SHALL CALL IN A LOCATION REQUEST TO UNDERGROUND SERVICE ALERT (USA), PHONE # 1-800-227-2600, TWO WORKING DAYS BEFORE DIGGING. NO CONSTRUCTION PERMIT WILL BE ISSUED BY THE PUBLIC WORKS DEPARTMENT INVOLVING EXCAVATION FOR UNDERGROUND FACILITIES UNLESS THE APPLICANT HAS BEEN PROVIDED AN INQUIRY IDENTIFICATION NUMBER BY U.S.A.
11. LOCATION OF LATERALS TO BE DETERMINED IN THE FIELD AT THE DIRECTION OF THE OWNER. AVOID CONFLICT WITH PROPOSED AND/OR EXISTING FACILITIES.
12. THE DEVELOPER AND/OR CONTRACTOR IS RESPONSIBLE FOR PERFORMING A VIDEO INSPECTION OF ALL NEW SEWER AND STORM DRAIN FACILITIES TO BE PUBLICLY OWNED AND MAINTAINED PRIOR TO FINAL ACCEPTANCE OF THE WORK. THE VIDEO INSPECTION MUST BE PERFORMED IN THE PRESENCE OF THE PUBLIC WORKS INSPECTOR. A RECORDING OF THE VIDEO INSPECTION MUST BE SUBMITTED TO THE CITY FOR REVIEW AND ACCEPTANCE.
13. DEVELOPER AND/OR CONTRACTOR TO GIVE RCFC 5-DAYS WRITTEN NOTICE PRIOR TO STARTING WORK ON STORM DRAIN (OR DOING ANY WORK WITHIN RCFC EASEMENTS). RCFC ENCROACHMENT PERMIT NO.
14. BEFORE THE RIP-RAP AT THE OUTLET OF ANY DRAINAGE STRUCTURE IS ACCEPTED BY THE CITY, IT SHALL BE TESTED UNDER FLOWS AS CLOSE AS POSSIBLE TO DESIGN CONDITIONS WITH WATER OBTAINED FROM FIRE HYDRANTS IN THE IMMEDIATE AREA.
15. IN PAVEMENT OVERLAY AREAS, ANY DISTRESSED EXISTING PAVEMENT SHALL BE REMOVED AND REPLACED AS DIRECTED BY THE INSPECTOR PRIOR TO OVERLAYING WITH A.C. PAVING.
16. THE CONTRACTOR SHALL COORDINATE TRENCHING FOR CABLE TELEVISION WITH OTHER TRENCHING WITHIN THE SUBDIVISION.

CONSTRUCTION NOTES

		UNIT	QTY.
1	INSTALL 54" RCP STORM DRAIN PIPE (D-LOAD PER PLAN)	750	LF
2	INSTALL 24" RCP STORM DRAIN PIPE (D-LOAD PER PLAN)	1190	LF
3	INSTALL 18" RCP STORM DRAIN PIPE (D-LOAD PER PLAN)	195	LF
4	INSTALL 8" PVC SDR35 STORM DRAIN PIPE	2,360	LF
5	CONSTRUCT MANHOLE EZ PER CITY OF RIVERSIDE STD. NO. 431	11	EA
6	CONSTRUCT TYPE 1 CATCH BASIN PER CITY OF RIVERSIDE STD NO. 400 (W PER PLAN)	12	EA
7	CONSTRUCT CONCRETE COLLAR PER CITY OF RIVERSIDE STD NO. 424	1	EA
8	CONSTRUCT MANHOLE AX PER CITY OF RIVERSIDE STD. NO. 430	2	EA
9	INSTALL 12" NDS CATCH BASIN OR APPROVED EQUAL	70	EA
10	INSTALL 90° ELBOW FOR 8" PVC	9	EA
11	INSTALL 8X8X8 PVC TEE CONNECTION	4	EA
12	INSTALL 45° FITTING FOR 8" PVC	1	EA
13	CONSTRUCT JUNCTION STRUCTURE NO.4 PER CITY OF RIVERSIDE STD. NO. 423 CASE 1	7	EA
14	INSTALL STORMTECH MC-4500 ISOLATOR ROW STRUCTURE. SEE DETAIL ON SHEET 11	222	LF
15	INSTALL 4" PVC DRAIN PIPE	282	LF
16	CONSTRUCT MANHOLE JM PER CITY OF RIVERSIDE STD. NO. 432	2	EA
17	INSTALL INSPECTION PORT PER DETAIL ON SHEET 11	2	EA
18	INSTALL CATCH BASIN DIVERSION STRUCTURE PER DETAIL ON SHEET 10	5	EA
19	NOT USED	–	–
20	NOT USED	–	–
21	TRENCH BACKFILL PER CITY OF RIVERSIDE STD. NO. 453 AND CASE 1 PIPE BEDDING PER CITY STD. NO. 452	–	–
22	INSTALL 6" PVC SDR35 STORM DRAIN PIPE	22	FT
23	INSTALL MANHOLE DIVERSION STRUCTURE PER DETAIL ON SHEET 10	1	EA
24	INSTALL 24" HDPE STORM DRAIN PIPE (ADS-N-12)	26	FT
25	INSTALL 90° ELBOW FOR 24" HDPE	1	EA
26	INSTALL 24" HDPE TEE CONNECTION	1	EA
27	INSTALL 18" HDPE STORM DRAIN PIPE (ADS-N-12)	12	FT
28	INSTALL 6" NDS ATRIUM GRATE	5	EA

LEGEND

1	CONSTRUCTION NOTE
63	LOT NUMBER
LOT "A"	LETTERED LOT
	LOT LINE
	PROPERTY LINE
	EASEMENT LINE
	RETAINING WALL
SD	PROPOSED SD
W	PROPOSED WATER
S	PROPOSED SEWER

SHEET INDEX

SHEET	DESCRIPTION
01	TITLE SHEET
02	PLAN & PROFILE LATERALS A&B
03	PLAN & PROFILE LATERALS C,D&E
04	PLAN AND PROFILE LINE A & B
05	PLAN AND PROFILE LINE B
06	PLAN AND PROFILE LINE C & D
07	PLAN AND PROFILE LINE E
08	YARD DRAIN PLANS
09	YARD DRAIN PLANS
10	DETAILS SHEET
11	DETAILS SHEET

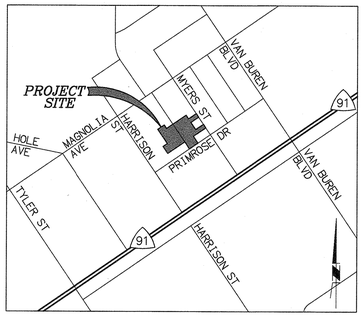

LOCATION MAP

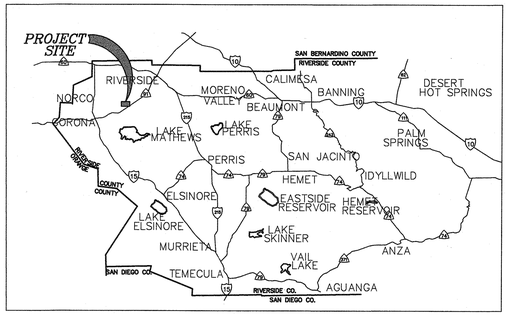

VICINITY MAP

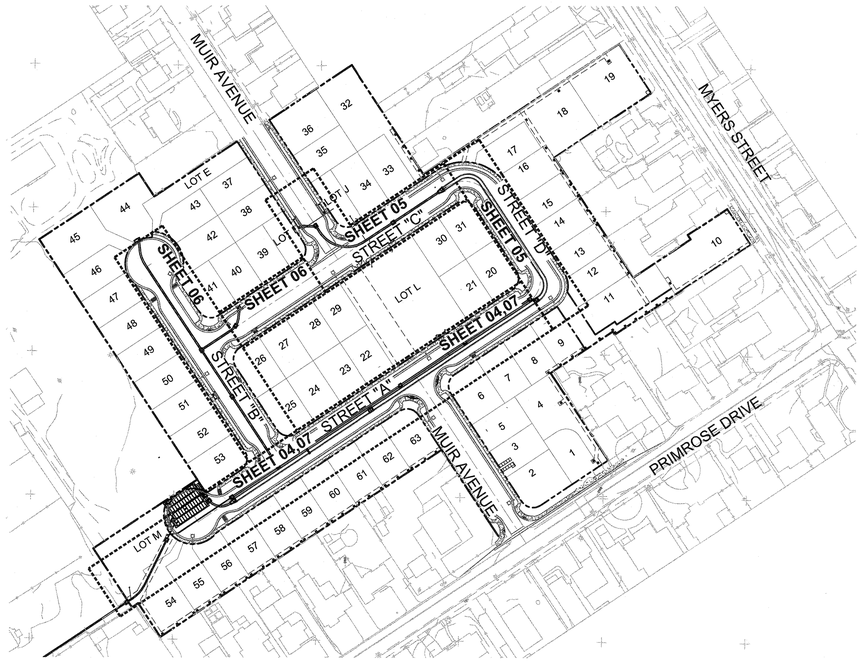

INDEX MAP

SCALE : 1"= 100'

100 50 0 100 200 300

SCALE: 1"=100'

NOTICE TO CONTRACTORS:

ALL UNDERGROUND UTILITIES OR STRUCTURES REPORTED BY THE OWNER OR OTHERS, AND THOSE SHOWN ON THE RECORDS EXAMINED, ARE INDICATED WITH THEIR APPROXIMATE LOCATION AND EXTENT. THE OWNER, BY ACCEPTING THESE PLANS OR PROCEEDING WITH IMPROVEMENTS PURSUANT THERETO, AGREES TO ASSUME LIABILITY AND TO HOLD UNDERSIGNED HARMLESS FOR ANY DAMAGES RESULTING FROM THE EXISTENCE OF UNDERGROUND UTILITIES OR STRUCTURES NOT REPORTED TO THE UNDERSIGNED, NOT INDICATED ON THE PUBLIC RECORDS EXAMINED, LOCATED AT VARIANCE WITH THOSE REPORTED OR SHOWN ON RECORDS EXAMINED. THE CONTRACTOR IS REQUIRED TO TAKE DUE PRECAUTIONARY MEASURES TO PROTECT THE UTILITIES OR STRUCTURES SHOWN AND ANY OTHER UTILITIES OR STRUCTURES FOUND AT THE SITE. IT SHALL BE THE CONTRACTOR'S RESPONSIBILITY TO NOTIFY THE OWNERS OF THE UTILITIES OR STRUCTURES CONCERNED BEFORE STARTING WORK.

THE EXISTENCE AND LOCATION OF ANY UNDERGROUND UTILITY PIPES OR STRUCTURES SHOWN ON THIS PLAN ARE OBTAINED BY A SEARCH OF AVAILABLE RECORDS. TO THE BEST OF OUR KNOWLEDGE THERE ARE NO EXISTING UTILITIES EXCEPT AS SHOWN ON THESE PLANS. THE CONTRACTOR IS REQUIRED TO TAKE DUE PRECAUTIONARY MEASURES TO PROTECT THE UTILITIES SHOWN AND ANY OTHER LINES OR STRUCTURES NOT SHOWN ON THESE PLANS. LINES OR STRUCTURES NOT SHOWN ON THESE PLANS.

ALL CONTRACTORS AND SUBCONTRACTORS PERFORMING WORK SHOWN ON OR RELATED TO THESE PLANS SHALL CONDUCT THEIR OPERATIONS SO THAT ALL EMPLOYEES ARE PROVIDED A SAFE PLACE TO WORK AND THE PUBLIC IS PROTECTED. ALL CONTRACTORS AND SUBCONTRACTORS SHALL COMPLY WITH THE "OCCUPATIONAL SAFETY AND HEALTH REGULATIONS" OF THE U.S. DEPARTMENT OF LABOR, AND WITH THE STATE OF CALIFORNIA DEPARTMENT OF INDUSTRIAL RELATIONS' "CONSTRUCTION SAFETY ORDERS".

THE CIVIL ENGINEER SHALL NOT BE RESPONSIBLE IN ANY WAY FOR THE CONTRACTORS' AND SUBCONTRACTORS' COMPLIANCE WITH THE "OCCUPATIONAL SAFETY AND HEALTH REGULATIONS" OF THE U.S. DEPARTMENT OF LABOR OR WITH THE STATE OF CALIFORNIA DEPARTMENT OF INDUSTRIAL RELATIONS" "CONSTRUCTION SAFETY ORDERS".

CONTRACTOR FURTHER AGREES THAT HE SHALL ASSUME SOLE AND COMPLETE RESPONSIBILITY FOR JOB SITE CONDITIONS DURING THE COURSE OF CONSTRUCTION OF THIS PROJECT, INCLUDING SAFETY OF ALL PERSONS AND PROPERTY, THAT THIS REQUIREMENT SHALL APPLY CONTINUOUSLY AND NOT BE LIMITED TO NORMAL WORKING HOURS, AND THAT THE CONTRACTOR SHALL DEFEND, INDEMNIFY AND HOLD THE OWNER AND THE ENGINEER HARMLESS FROM ANY AND ALL LIABILITY, REAL OR ALLEGED, IN CONNECTION WITH THE PERFORMANCE OF WORK ON THIS PROJECT, EXCEPTING FOR LIABILITY ARISING FROM THE SOLE NEGLIGENCE OF THE OWNER OR THE ENGINEER.

THE ESTIMATED QUANTITIES HEREON ARE ONLY FOR THE PURPOSE OF OBTAINING THE NECESSARY PERMITS, AND MICHAEL BAKER INTERNATIONAL DOES NOT GUARANTEE THE ACCURACY OF THE ESTIMATED QUANTITIES. THE CONTRACTOR SHALL PERFORM HIS OWN QUANTITY TAKEOFF BEFORE SUBMITTING A BID FOR ANY PORTION OF THE IMPROVEMENTS COVERED BY THESE PLANS.

DECLARATION OF ENGINEER OF RECORD:

I HEREBY DECLARE THAT IN MY PROFESSIONAL OPINION, THE DESIGN OF THE IMPROVEMENTS AS SHOWN ON THESE PLANS COMPLIES WITH THE CURRENT PROFESSIONAL ENGINEERING STANDARDS AND PRACTICES. AS THE ENGINEER IN RESPONSIBLE CHARGE AS DEFINED IN 6708 OF BUSINESS & PROFESSIONS CODE. OF THE DESIGN OF THESE IMPROVEMENTS, I ACCEPT FULL RESPONSIBILITY FOR SUCH DESIGN. I UNDERSTAND AND ACKNOWLEDGE THAT THE PLAN CHECK OF THESE PLANS BY THE CITY OF RIVERSIDE IS A REVIEW FOR THE LIMITED PURPOSE OF ENSURING THAT THESE PLANS COMPLY WITH CITY PROCEDURES AND OTHER APPLICABLE CODES AND ORDINANCES. THE PLAN REVIEW PROCESS IS NOT A DETERMINATION OF THE TECHNICAL ADEQUACY OF THE DESIGN OF THE IMPROVEMENTS. SUCH A PLAN CHECK DOES NOT THEREFORE RELIEVE ME OF MY DESIGN RESPONSIBILITY.

AS THE ENGINEER OF RECORD, I AGREE TO DEFEND AND INDEMNIFY THE CITY OF RIVERSIDE, ITS OFFICERS, ITS AGENTS, AND ITS EMPLOYEES FROM ANY AND ALL LIABILITY, CLAIMS, DAMAGES, OR INJURIES TO ANY PERSON OR PROPERTY ARISING FROM NEGLIGENT ACTS, ERRORS OR OMISSIONS OF THE ENGINEER OF RECORD, HIS EMPLOYEES, HIS AGENTS OR HIS CONSULTANTS.

SIGNATURE: _____ DATE: 02/07/2019
MAURICIO M. IACUELLI

LICENSE NO.: 63249 EXP.: 6-30-20

ABBREVIATIONS

AB	AGGREGATE BASE	INV	INVERT
AC	ASPHALT CONCRETE	LF	LINEAR FEET
BC	BEGINNING OF CURVE	LS	LUMP SUM
BDY	BOUNDARY	MH	MANHOLE
BDRY	BOUNDARY	MSE	MECHANICALLY STABILIZED EARTH
BOP	BOTTOM OF PIPE	N.A.P.	NOT A PART
BP	BEGIN PIPE	PAD	PAD ELEVATION
BVC	BEGIN VERTICAL CURVE	PL	PROPERTY LINE
BW	BACK OF WALK	PP	POWER POLE
CATV	CABLE TELEVISION	PROP	PROPOSED
CB	CATCH BASIN	PVI	POINT OF VERTICAL INTERSECTION
CF	CURB FACE	RD	ROAD
CL	CENTER LINE	RD	RISER DIAMETER
CSP	CORRUGATED STEEL PIPE	RG	ROUGH GRADE
CY	CUBIC YARDS	R/W	RIGHT-OF-WAY
D/L	DAYLIGHT	SDMH	STORM DRAIN MANHOLE
EC	END OF CURVE	SF	SQUARE FEET
E	ELECTRIC	SW	SIDEWALK
EA	EACH	SS	SEWER
ELEV	ELEVATION	SMH	SEWER MANHOLE
EP	END OF PIPE	STA	STATION
ESMT	EASEMENT	ST	STREET
EVC	END VERTICAL CURVE	T	TELEPHONE
EXIST	EXISTING	TB	TOP OF BERM
( )	EXISTING ELEVATION	TC	TOP OF CURB (CONCRETE)
FF	FINISH FLOOR ELEVATION	TF	TOP OF FOOTING
FH	FIRE HYDRANT	TG	TOP OF GRATE
FG	FINISHED GROUND (LANDSCAPING)	TOP	TOP OF PIPE
FL	FLOWLINE	TR	TRACT
FS	FINISHED SURFACE (ASPHALT)	TR	TOP OF RISER
G	NATURAL GAS	TRW	TOP OF RETAINING WALL
GB	GRADE BREAK	TCD	TOP OF CHECK DAM
GR	GRADING	TW	TOP OF WALL
HP	HIGH POINT	W	WATER

REFERENCE PLANS

SEWER	PW18-0519 &	S-2172
WATER	PUW18-0224 &	D5-1905106
STORM DRAIN	PW18-0520 &	D-899
STREET	PW18-0518 &	R-4458 & R-4459

APPLICANT/DEVELOPER:

KB HOME COASTAL, INC
36310 INLAND VALLEY DRIVE
WILDOMAR, CA 92595

CIVIL ENGINEER

MICHAEL BAKER INTERNATIONAL
3536 CONCOURS ST., SUITE 100
ONTARIO, CA 91764
TEL: (949) 472-3505
CITY BUSINESS TAX = 1238616
EXPIRES = JULY 31, 2019

GEOTECHNICAL ENGINEER

GEOTEK, INC
1548 NORTH MAPLE STREET
CORONA, CA 92880
(951) 710-1160
CITY BUSINESS TAX = 0118445
EXPIRES = JANUARY 31, 2020

WDID NO. 833C383218

UNDERGROUND SERVICE ALERT
IMPORTANT NOTICE
Section 4216/4217 of the Government Code requires a Dig Alert Identification Number to be issued before a "Permit to Excavate" will be valid. For your Dig Alert I.D. Number call CALL TOLL FREE
48 HOURS BEFORE YOU DIG
1-800-227-2600
TWO WORKING DAYS BEFORE YOU WORK

BENCHMARK
DESIGNATION: NGS DX2781 (ALSO RIV. CO. BM 0-38)
DESCRIPTION: AT ARLINGTON, RIVERSIDE COUNTY, AT THE INTERSECTION OF MAGNOLIA AND ROOSEVELT STREETS AT THE ARLINGTON BRANCH OF THE RIVERSIDE PUBLIC LIBRARY, ON THE EAST SIDE OF THE MAIN ENTRANCE, AND ABOUT 1 FOOT ABOVE THE GROUND. A STANDARD DISK, STAMPED 0 38 1924.
ELEVATION: (NAVD88) 790.82 FEET

CITY OF RIVERSIDE
PUBLIC UTILITIES DEPARTMENT
WATER DIVISION
APPROVED BY: 2/12/19 DATE
VOID ONE YEAR FROM THIS DATE

Michael Baker INTERNATIONAL
3536 CONCOURS ST., SUITE 100
ONTARIO, CA 91764

ENGINEER IN RESPONSIBLE CHARGE
MAURICIO M. IACUELLI
R.C.E. No. 63249 EXPIRES 6/30/20
DATE 02/07/2019

REGISTERED PROFESSIONAL ENGINEER MAURICIO M. IACUELLI No. 63249 CIVIL STATE OF CALIFORNIA

MARK	REVISIONS	APPR.	DATE

DESIGNED BY WS DRAWN BY WS CHECKED BY MMI

CITY OF RIVERSIDE, CALIFORNIA
PUBLIC WORKS DEPARTMENT

APPROVED BY	BY	DATE
PRINCIPAL ENGINEER		2/26/19
ENGINEERING MANAGER		2/26/19

APPROVED BY
CITY ENGINEER
DATE 2-28-19

PRIMROSE RESIDENTIAL - TRACT 37219
PRIVATE STORM DRAIN PLANS
TITLE SHEET
PRIMROSE AVENUE, RIVERSIDE
HORIZONTAL SCALE: PER PLAN VERTICAL SCALE: PER PLAN

PW18-0520
D-900
SHEET 01 OF 11

H:\PDATA\166009\CADD\LAND\DLV\IMPROVE\SD\166009-01-SD.DWG ADACHI, CHAD 2/6/2019 12:04 PM

PROFILE SCALE
HORIZ. 1" = 40'
VERT. 1" = 4'

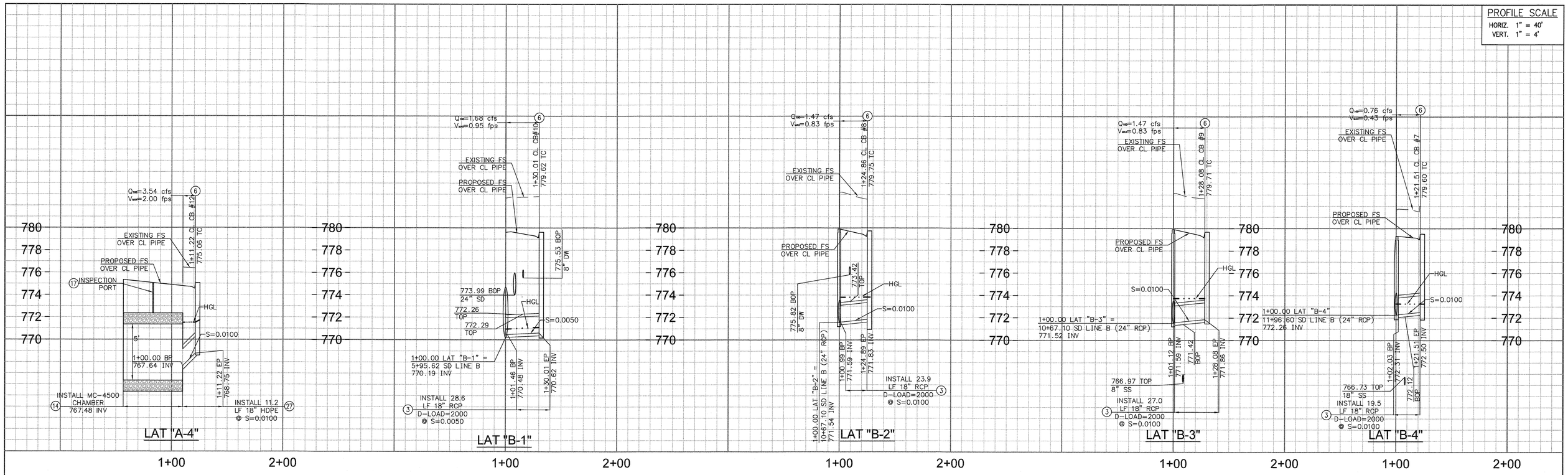

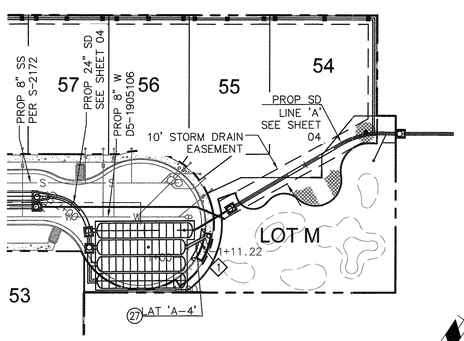

LAT "A-4"
STREET A
(SEE SHEET 04)

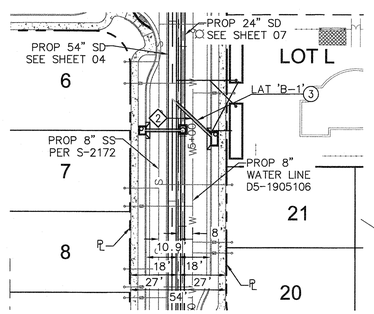

LAT "B-1"
STREET A
(SEE SHEET 04)

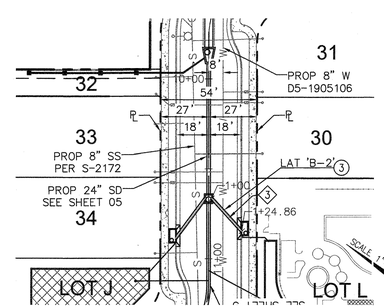

LAT "B-2"
STREET C
(SEE SHEET 05)

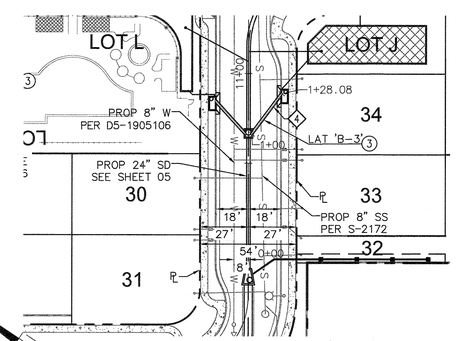

LAT "B-3"
STREET C
(SEE SHEET 05)

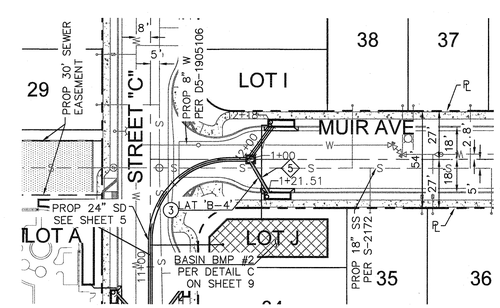

LAT "B-4"
MUIR AVE
(SEE SHEET 05)

CONSTRUCTION NOTES

3	INSTALL 18" RCP STORM DRAIN PIPE (D-LOAD PER PLAN)
6	CONSTRUCT TYPE 1 CATCH BASIN PER CITY OF RIVERSIDE STD NO. 400 (W PER PLAN)
14	INSTALL STORMTECH MC-4500 ISOLATOR ROW STRUCTURE. SEE DETAIL ON SHEET 11
17	INSTALL INSPECTION PORT PER DETAIL ON SHEET 11
27	INSTALL 18" HDPE STORM DRAIN PIPE (ADS-N-12)

LINE/CURVE DATA

NO.	BEARING/DELTA	RADIUS	LENGTH	TANGENT
1	N 27°34'24" E	--	11.22'	--
2	N 09°20'07" E	--	30.01'	--
3	N 13°58'44" E	--	24.86'	--
4	N 87°02'51" W	--	27.24'	--
5	N 25°40'43" E	--	21.51'	--

40 20 0 40 80 120
SCALE: 1"=40'

WDID NO. 833C383218

UNDERGROUND SERVICE ALERT
IMPORTANT NOTICE
Section 4216/4217 of the Government Code requires a Dig Alert Identification Number to be issued before a "Permit to Excavate" will be valid. For your Dig Alert I.D. Number call CALL TOLL FREE
48 HOURS BEFORE YOU DIG
1-800-227-2600
TWO WORKING DAYS BEFORE YOU WORK

BENCHMARK
DESIGNATION: NGS DX2781 (ALSO RIV. CO. BM 0-38)
DESCRIPTION: AT ARLINGTON, RIVERSIDE COUNTY, AT THE INTERSECTION OF MAGNOLIA AND ROOSEVELT STREETS AT THE ARLINGTON BRANCH OF THE RIVERSIDE PUBLIC LIBRARY, ON THE EAST SIDE OF THE MAIN ENTRANCE, AND ABOUT 1 FOOT ABOVE THE GROUND. A STANDARD DISK, STAMPED 0 38 1924.
ELEVATION: (NAVD88) 790.82 FEET

CITY OF RIVERSIDE
PUBLIC UTILITIES DEPARTMENT
WATER DIVISION
APPROVED BY 2/12/19 DATE
VOID ONE YEAR FROM THIS DATE

Michael Baker
INTERNATIONAL
3536 CONCOURS ST., SUITE 100
ONTARIO, CA 91764

ENGINEER IN RESPONSIBLE CHARGE
MAURICIO M. IACUELLI
R.C.E. No. 63249 EXPIRES 6/30/20
DATE 02/07/2019

REGISTERED PROFESSIONAL ENGINEER
MAURICIO M. IACUELLI
No. 63249
CIVIL
STATE OF CALIFORNIA

MARK	REVISIONS	APPR.	DATE

DESIGNED BY WS DRAWN BY WS CHECKED BY MMI

CITY OF RIVERSIDE, CALIFORNIA
PUBLIC WORKS DEPARTMENT

APPROVED BY	BY	DATE
PRINCIPAL ENGINEER		2/12/19
ENGINEERING MANAGER		2/12/19

APPROVED BY
CITY ENGINEER
DATE 2-28-19

PRIMROSE RESIDENTIAL - TRACT 37219
PRIVATE STORM DRAIN PLANS
PLAN & PROFILE LATERALS A&B
PRIMROSE AVENUE, RIVERSIDE
HORIZONTAL SCALE: PER PLAN VERTICAL SCALE: PER PLAN

PW18-0520
D-900
SHEET 02 OF 11

H:\PDATA\166009\CADD\LAND\DLV\IMPROVE\SD\166009-02-SD.DWG ADACHI, CHAD 2/7/2019 7:45 AM

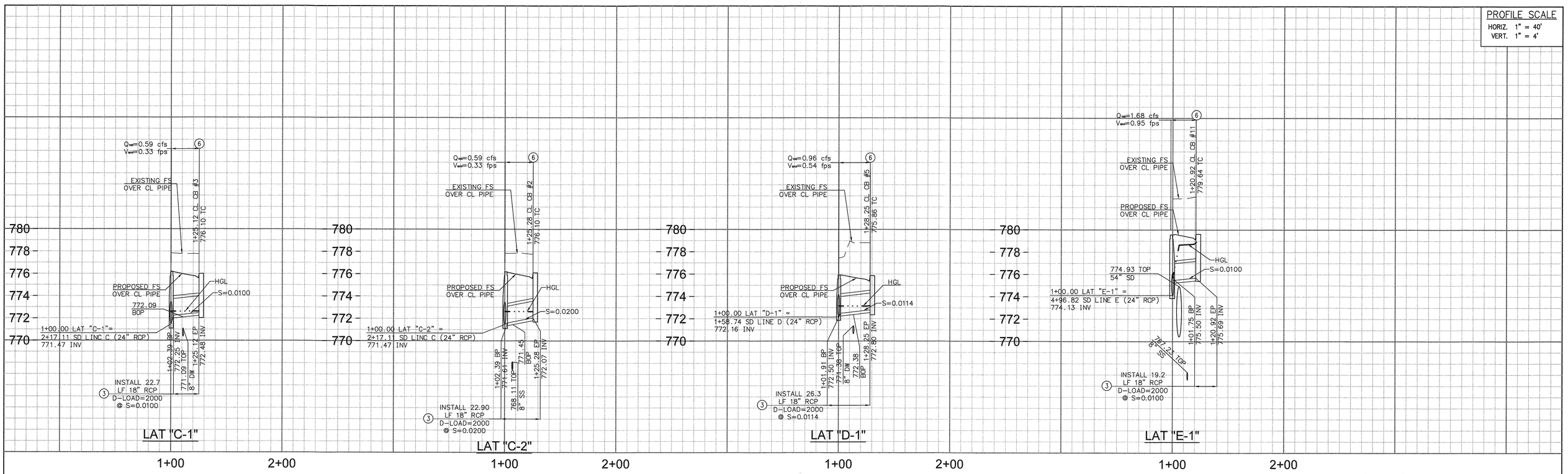

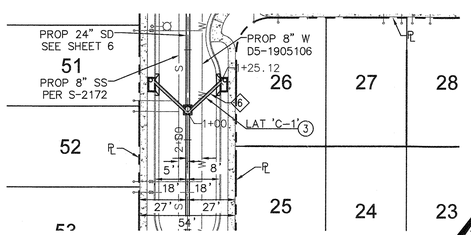

LAT "C-1"
STREET B
(SEE SHEET 06)

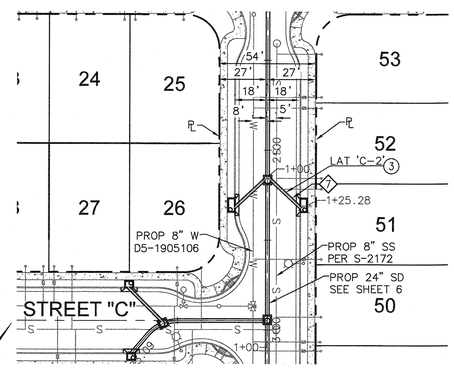

LAT "C-2"
STREET B
(SEE SHEET 06)

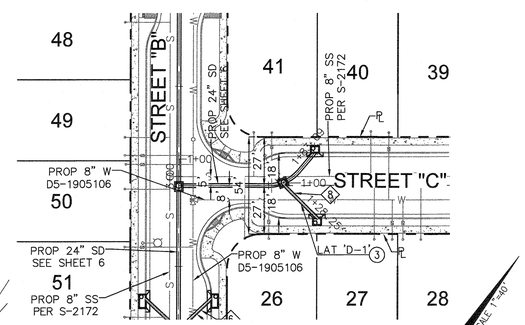

LAT "D-1"
STREET C
(SEE SHEET 06)

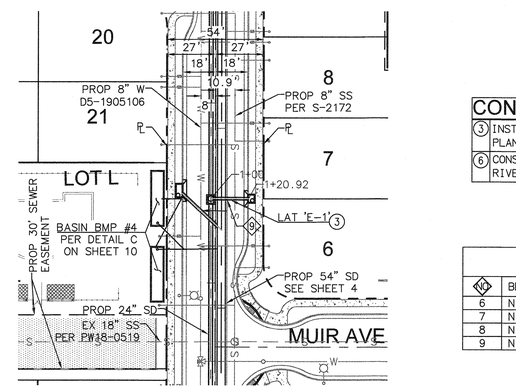

LAT "E-1"
STREET A
(SEE SHEET 07)

CONSTRUCTION NOTES

3	INSTALL 18" RCP STORM DRAIN PIPE (D-LOAD PER PLAN)
6	CONSTRUCT TYPE 1 CATCH BASIN PER CITY OF RIVERSIDE STD NO. 400 (W PER PLAN)

LINE/CURVE DATA

NO.	BEARING/DELTA	RADIUS	LENGTH	TANGENT
6	N 13°31'13" E	--	25.12'	--
7	N 80°42'33" W	--	25.28'	--
8	N 78°43'33" W	--	28.25'	--
9	N 33°38'17" W	--	20.92'	--

40 20 0 40 80 120
SCALE: 1"=40'

WDID NO. 833C383218

UNDERGROUND SERVICE ALERT
IMPORTANT NOTICE
Section 4216/4217 of the Government Code requires a Dig Alert Identification Number to be issued before a "Permit to Excavate" will be valid. For your Dig Alert I.D. Number call CALL TOLL FREE
48 HOURS BEFORE YOU DIG
1-800-227-2600
TWO WORKING DAYS BEFORE YOU WORK

BENCHMARK
DESIGNATION: NGS DX2781 (ALSO RIV. CO. BM 0-38)
DESCRIPTION: AT ARLINGTON, RIVERSIDE COUNTY, AT THE INTERSECTION OF MAGNOLIA AND ROOSEVELT STREETS AT THE ARLINGTON BRANCH OF THE RIVERSIDE PUBLIC LIBRARY, ON THE EAST SIDE OF THE MAIN ENTRANCE, AND ABOUT 1 FOOT ABOVE THE GROUND. A STANDARD DISK, STAMPED 0 38 1924.
ELEVATION: (NAVD88) 790.82 FEET

CITY OF RIVERSIDE
PUBLIC UTILITIES DEPARTMENT
WATER DIVISION
APPROVED BY: 2/12/19 DATE
VOID ONE YEAR FROM THIS DATE

Michael Baker
INTERNATIONAL
3536 CONCOURS ST., SUITE 100
ONTARIO, CA 91764

ENGINEER IN RESPONSIBLE CHARGE
MAURICIO M. IACUELLI
R.C.E. No. 63249 EXPIRES 6/30/20
DATE 02/07/2019

REGISTERED PROFESSIONAL ENGINEER MAURICIO M. IACUELLI No. 63249 CIVIL STATE OF CALIFORNIA

MARK	REVISIONS	APPR.	DATE

DESIGNED BY WS DRAWN BY WS CHECKED BY MMI

CITY OF RIVERSIDE, CALIFORNIA
PUBLIC WORKS DEPARTMENT

APPROVED BY	BY	DATE
PRINCIPAL ENGINEER		2/21/19
ENGINEERING MANAGER		2/21/19

APPROVED BY
CITY ENGINEER
DATE 2-28-19

PRIMROSE RESIDENTIAL - TRACT 37219
PRIVATE STORM DRAIN PLANS
PLAN & PROFILE LATERALS C,D&E
PRIMROSE AVENUE, RIVERSIDE
HORIZONTAL SCALE: PER PLAN VERTICAL SCALE: PER PLAN

PW18-0520
D-900
SHEET 03 OF 11

H:\PDATA\166009\CADD\LAND\DLV\IMPROVE\SD\166009-02-SD.DWG ADACHI, CHAD 2/7/2019 7:53 AM

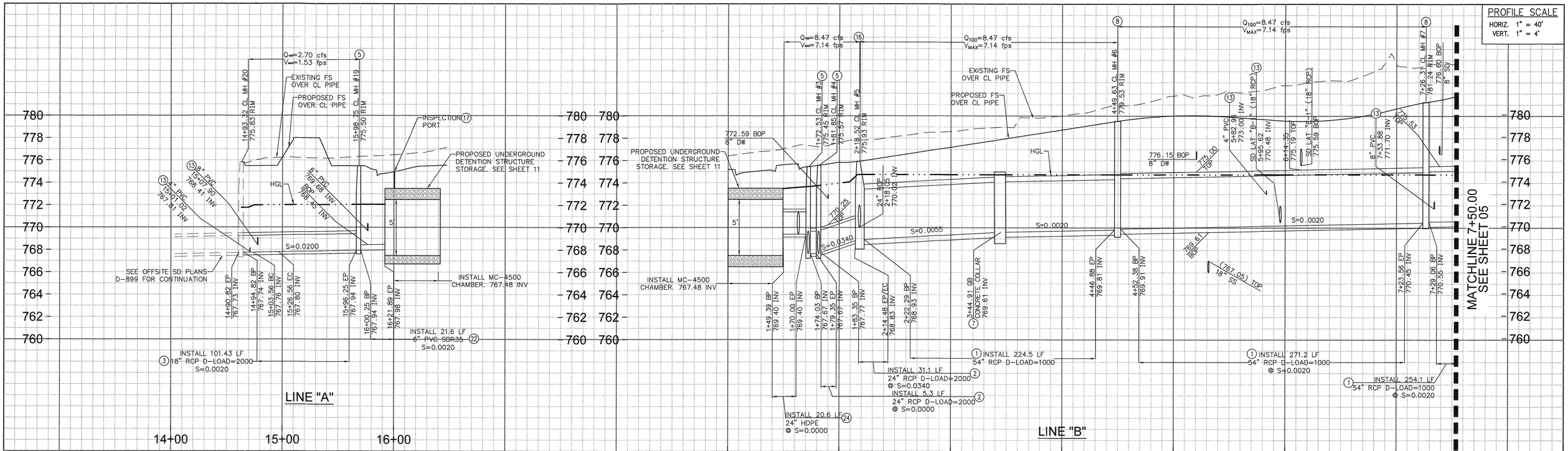

LINE/CURVE DATA TABLE			
NO.	BEARING/DELTA	RADIUS	LENGTH
1	N 57°52'17" E	--	8.07'
2	29°23'31"	44.83'	23.00'
3	N 26°00'34" E	--	95.35'
4	N 56°04'14" E	--	55.42'
5	N 55°59'45" E	--	53.82'
6	N 34°15'42" W	--	24.86'
7	75°39'38"	22.50'	29.71'
8	N 56°21'38" E	--	516.08'
9	52°23'22"	22.50'	20.57'

CONSTRUCTION NOTES

1. INSTALL 54" RCP STORM DRAIN PIPE (D-LOAD PER PLAN)
2. INSTALL 24" RCP STORM DRAIN PIPE (D-LOAD PER PLAN)
3. INSTALL 18" RCP STORM DRAIN PIPE (D-LOAD PER PLAN)
5. CONSTRUCT MANHOLE EZ PER CITY OF RIVERSIDE STD. NO. 431
6. CONSTRUCT TYPE 1 CATCH BASIN PER CITY OF RIVERSIDE STD NO. 400 (W PER PLAN)
7. CONSTRUCT CONCRETE COLLAR PER CITY OF RIVERSIDE STD NO. 424
8. CONSTRUCT MANHOLE AX PER CITY OF RIVERSIDE STD. NO. 430
13. CONSTRUCT JUNCTION STRUCTURE NO.4 PER CITY OF RIVERSIDE STD. NO. 423 CASE 1
14. INSTALL STORMTECH MC-4500 ISOLATOR ROW STRUCTURE. SEE DETAIL ON SHEET 11
16. CONSTRUCT MANHOLE JM PER CITY OF RIVERSIDE STD. NO. 432
17. INSTALL INSPECTION PORT PER DETAIL ON SHEET 11
18. INSTALL CATCH BASIN DIVERSION STRUCTURE PER DETAIL ON SHEET 10
22. INSTALL 6" PVC SDR35 STORM DRAIN PIPE
24. INSTALL 24" HDPE STORM DRAIN PIPE (ADS-N-12)
25. INSTALL 90° ELBOW FOR 24" HDPE
26. INSTALL 24" HDPE TEE CONNECTION

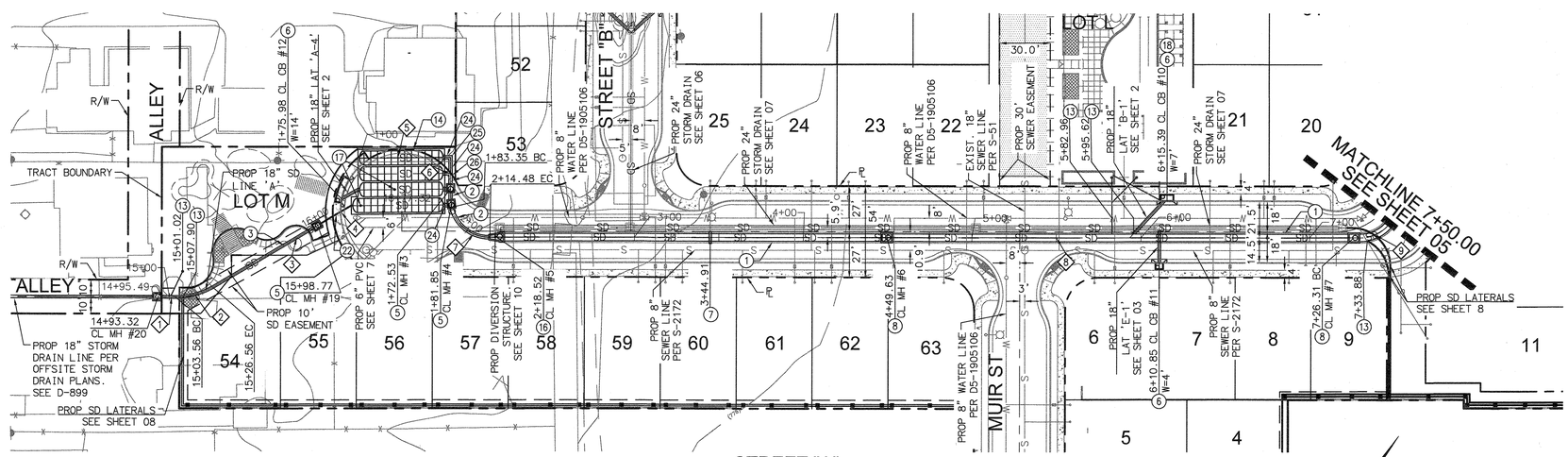

WDID NO. 833C383218

UNDERGROUND SERVICE ALERT
IMPORTANT NOTICE
Section 4216/4217 of the Government Code requires a Dig Alert Identification Number to be issued before a "Permit to Excavate" will be valid. For your Dig Alert I.D. Number call CALL TOLL FREE
48 HOURS BEFORE YOU DIG
1-800-227-2600
TWO WORKING DAYS BEFORE YOU WORK

BENCHMARK
DESIGNATION: NGS DX2781 (ALSO RIV. CO. BM 0-38)
DESCRIPTION: AT ARLINGTON, RIVERSIDE COUNTY, AT THE INTERSECTION OF MAGNOLIA AND ROOSEVELT STREETS AT THE ARLINGTON BRANCH OF THE RIVERSIDE PUBLIC LIBRARY, ON THE EAST SIDE OF THE MAIN ENTRANCE, AND ABOUT 1 FOOT ABOVE THE GROUND. A STANDARD DISK, STAMPED 0 38 1924.
ELEVATION: (NAVD88) 790.82 FEET

CITY OF RIVERSIDE
PUBLIC UTILITIES DEPARTMENT
WATER DIVISION
APPROVED BY 2/12/19 DATE
VOID ONE YEAR FROM THIS DATE

Michael Baker INTERNATIONAL
3536 CONCOURS ST., SUITE 100
ONTARIO, CA 91764

ENGINEER IN RESPONSIBLE CHARGE
MAURICIO M. IACUELLI
R.C.E. No. 63249 EXPIRES 6/30/20
DATE 02/07/2019

REGISTERED PROFESSIONAL ENGINEER MAURICIO M. IACUELLI No. 63249 CIVIL STATE OF CALIFORNIA

MARK	REVISIONS	APPR.	DATE

DESIGNED BY WS DRAWN BY WS CHECKED BY MMI

CITY OF RIVERSIDE, CALIFORNIA
PUBLIC WORKS DEPARTMENT

APPROVED BY	BY	DATE
PRINCIPAL ENGINEER	KS	2/12/19
ENGINEERING MANAGER		2/12/19

APPROVED BY
CITY ENGINEER
DATE 2-28-19

PRIMROSE RESIDENTIAL - TRACT 37219
PRIVATE STORM DRAIN PLANS
PLAN AND PROFILE LINE A & B
PRIMROSE AVENUE, RIVERSIDE
HORIZONTAL SCALE: PER PLAN VERTICAL SCALE: PER PLAN

PW18-0520
D-900
SHEET 04 OF 11

H:\PDATA\166009\CADD\LAND\DLV\IMPROVE\SD\166009-04-SD - COPY.DWG ADACHI, CHAD 2/7/2019 7:55 AM

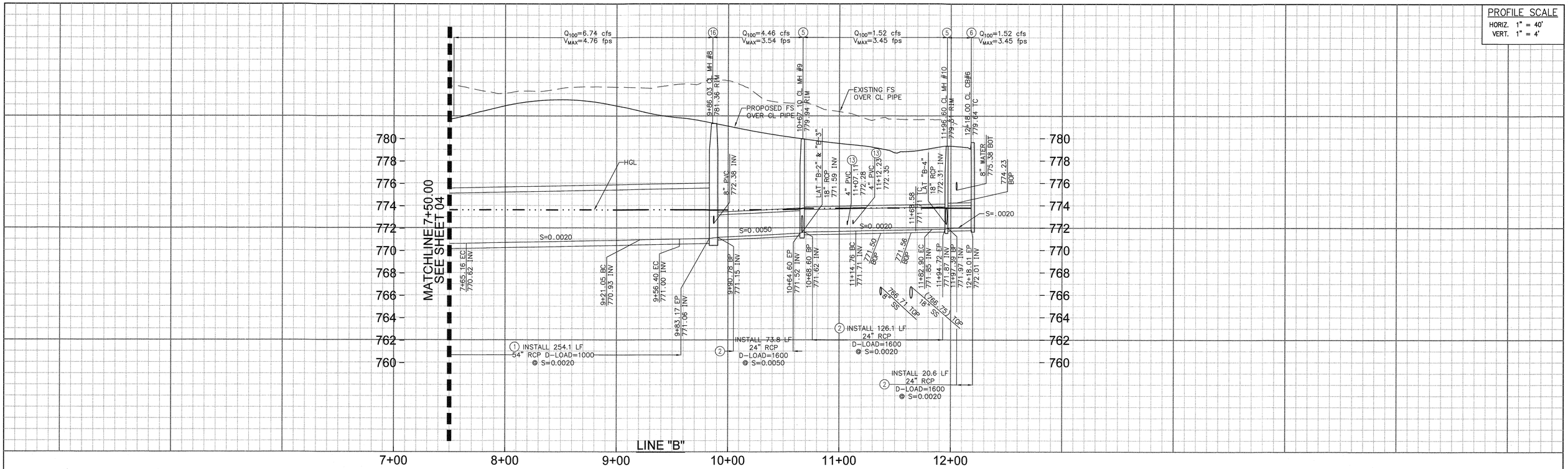

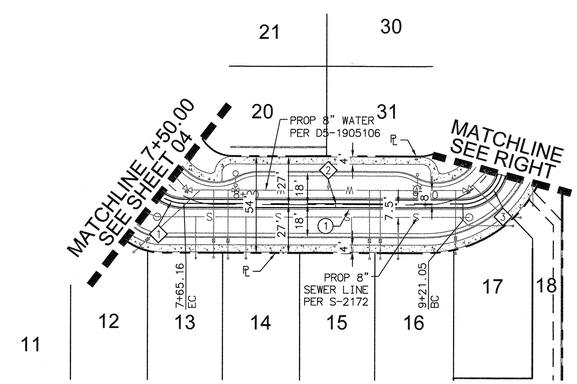

STREET "D"
LINE "B"

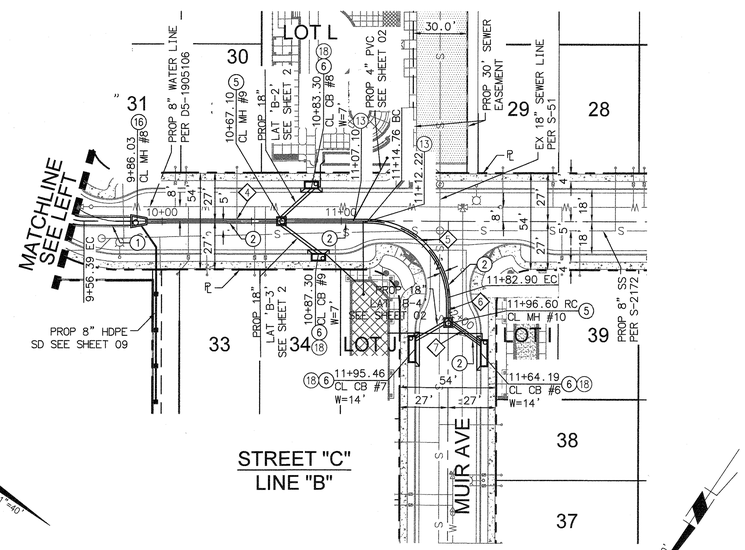

STREET "C"
LINE "B"

SCALE 1"=40'

CONSTRUCTION NOTES

1	INSTALL 54" RCP STORM DRAIN PIPE (D-LOAD PER PLAN)
2	INSTALL 24" RCP STORM DRAIN PIPE (D-LOAD PER PLAN)
5	CONSTRUCT MANHOLE EZ PER CITY OF RIVERSIDE STD. NO. 431
6	CONSTRUCT TYPE 1 CATCH BASIN PER CITY OF RIVERSIDE STD NO. 400 (W PER PLAN)
13	CONSTRUCT JUNCTION STRUCTURE NO.4 PER CITY OF RIVERSIDE STD. NO. 423 CASE 1
16	CONSTRUCT MANHOLE JM PER CITY OF RIVERSIDE STD. NO. 432
18	INSTALL CATCH BASIN DIVERSION STRUCTURE PER DETAIL ON SHEET 11

LINE/CURVE DATA TABLE

NO.	BEARING/DELTA	RADIUS	LENGTH
1	90°00'51"	22.50'	35.35'
2	N 33°39'25" W	--	155.89'
3	90°00'30"	22.50'	35.35'
4	N 56°20'05" E	--	158.36'
5	N 80°19'01" W	45.00'	68.10'
6	N 33°59'16" W	--	11.81'
7	N 87°57'59" W	--	20.61'

40 20 0 40 80 120
SCALE: 1"=40'

WDID NO. 833C383218

UNDERGROUND SERVICE ALERT
IMPORTANT NOTICE
Section 4216/4217 of the Government Code requires a Dig Alert Identification Number to be issued before a "Permit to Excavate" will be valid. For your Dig Alert I.D. Number call CALL TOLL FREE
48 HOURS BEFORE YOU DIG
1-800-227-2600
TWO WORKING DAYS BEFORE YOU WORK

BENCHMARK
DESIGNATION: NGS DX2781 (ALSO RIV. CO. BM 0-38)
DESCRIPTION: AT ARLINGTON, RIVERSIDE COUNTY, AT THE INTERSECTION OF MAGNOLIA AND ROOSEVELT STREETS AT THE ARLINGTON BRANCH OF THE RIVERSIDE PUBLIC LIBRARY, ON THE EAST SIDE OF THE MAIN ENTRANCE, AND ABOUT 1 FOOT ABOVE THE GROUND. A STANDARD DISK, STAMPED 0 38 1924.
ELEVATION: (NAVD88) 790.82 FEET

CITY OF RIVERSIDE
PUBLIC UTILITIES DEPARTMENT
WATER DIVISION
APPROVED BY: 2/12/19 DATE
VOID ONE YEAR FROM THIS DATE

Michael Baker
INTERNATIONAL
3536 CONCOURS ST., SUITE 100
ONTARIO, CA 91764

ENGINEER IN RESPONSIBLE CHARGE
MAURICIO M. IACUELLI
R.C.E. No. 63249 EXPIRES 6/30/20
DATE 02/07/2019

REGISTERED PROFESSIONAL ENGINEER
MAURICIO M. IACUELLI
No. 63249
CIVIL
STATE OF CALIFORNIA

MARK	REVISIONS	APPR.	DATE

DESIGNED BY WS DRAWN BY WS CHECKED BY MMI

CITY OF RIVERSIDE, CALIFORNIA
PUBLIC WORKS DEPARTMENT

APPROVED BY	BY	DATE
PRINCIPAL ENGINEER		2/26/19
ENGINEERING MANAGER		2/26/19

APPROVED BY
CITY ENGINEER
DATE 2-28-19

PRIMROSE RESIDENTIAL - TRACT 37219
PRIVATE STORM DRAIN PLANS
PLAN AND PROFILE LINE B
PRIMROSE AVENUE, RIVERSIDE
HORIZONTAL SCALE: PER PLAN VERTICAL SCALE: PER PLAN

PW18-0520
D-900
SHEET 05 OF 11

H:\PDATA\166009\CADD\LAND\DLV\IMPROVE\SD\166009-05-SD.DWG ADACHI, CHAD 2/7/2019 8:29 AM

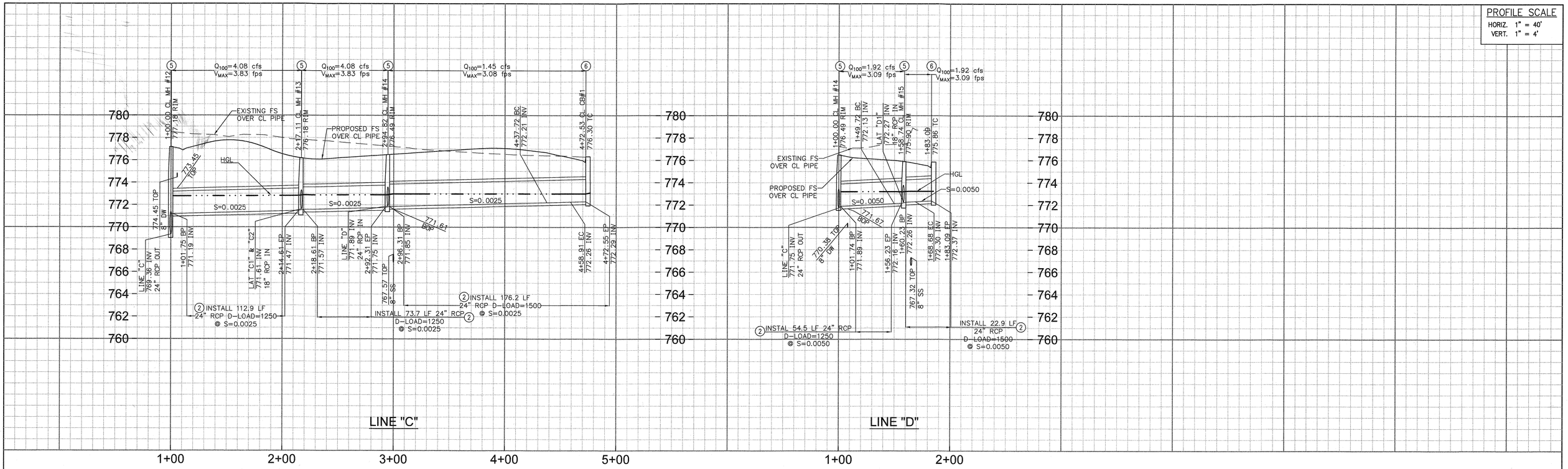

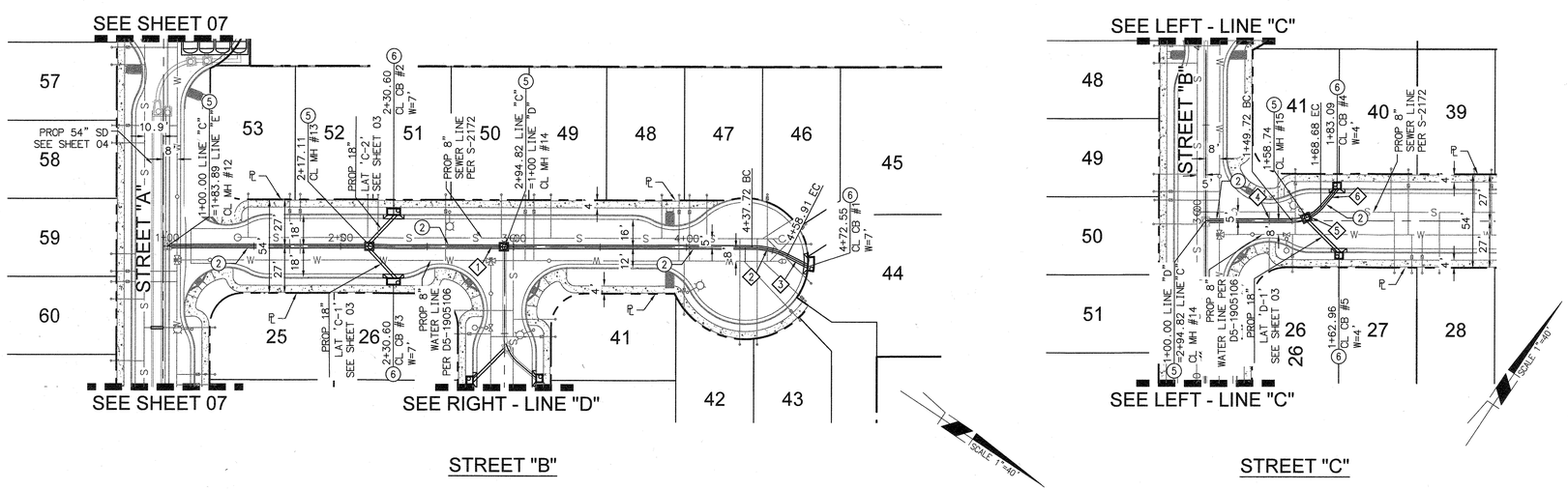

LINE "C"

LINE "D"

CONSTRUCTION NOTES

2	INSTALL 24" RCP STORM DRAIN PIPE (D-LOAD PER PLAN)
5	CONSTRUCT MANHOLE EZ PER CITY OF RIVERSIDE STD. NO. 431
6	CONSTRUCT TYPE 1 CATCH BASIN PER CITY OF RIVERSIDE STD NO. 400 (W PER PLAN)

LINE/CURVE DATA TABLE

NO.	BEARING/DELTA	RADIUS	LENGTH
1	N 33°37'33" W	--	337.72'
2	26°58'56"	45.00'	21.19'
3	N 06°38'38" W	--	13.64'
4	N 56°20'05" E	--	49.72'
5	48°16'49"	22.50'	18.96'
6	N 06°43'52" E	--	14.39'

40 20 0 40 80 120
SCALE: 1"=40'

WDID NO. 833C383218

UNDERGROUND SERVICE ALERT
IMPORTANT NOTICE
Section 4216/4217 of the Government Code requires a Dig Alert Identification Number to be issued before a "Permit to Excavate" will be valid. For your Dig Alert I.D. Number call CALL TOLL FREE
48 HOURS BEFORE YOU DIG
1-800-227-2600
TWO WORKING DAYS BEFORE YOU WORK

BENCHMARK
DESIGNATION: NGS DX2781 (ALSO RIV. CO. BM 0-38)
DESCRIPTION: AT ARLINGTON, RIVERSIDE COUNTY, AT THE INTERSECTION OF MAGNOLIA AND ROOSEVELT STREETS AT THE ARLINGTON BRANCH OF THE RIVERSIDE PUBLIC LIBRARY, ON THE EAST SIDE OF THE MAIN ENTRANCE, AND ABOUT 1 FOOT ABOVE THE GROUND. A STANDARD DISK, STAMPED 0 38 1924.
ELEVATION: (NAVD88) 790.82 FEET

CITY OF RIVERSIDE
PUBLIC UTILITIES DEPARTMENT
WATER DIVISION
APPROVED BY: 2/12/19 DATE
VOID ONE YEAR FROM THIS DATE

Michael Baker
INTERNATIONAL
3536 CONCOURS ST., SUITE 100
ONTARIO, CA 91764

ENGINEER IN RESPONSIBLE CHARGE
MAURICIO M. IACUELLI
R.C.E. No. 63249 EXPIRES 6/30/20
DATE 02/07/2019

REGISTERED PROFESSIONAL ENGINEER
MAURICIO M. IACUELLI
No. 63249
CIVIL
STATE OF CALIFORNIA

MARK	REVISIONS	APPR.	DATE

DESIGNED BY WS DRAWN BY WS CHECKED BY MMI

CITY OF RIVERSIDE, CALIFORNIA
PUBLIC WORKS DEPARTMENT

APPROVED BY	BY	DATE
PRINCIPAL ENGINEER		2/12/19
ENGINEERING MANAGER		2/12/19

APPROVED BY
CITY ENGINEER
DATE 2-28-19

PRIMROSE RESIDENTIAL - TRACT 37219
PRIVATE STORM DRAIN PLANS
PLAN AND PROFILE LINE C & D
PRIMROSE AVENUE, RIVERSIDE
HORIZONTAL SCALE: PER PLAN VERTICAL SCALE: PER PLAN

PW18-0520
D-900
SHEET 06 OF 11

H:\PDATA\166009\CADD\LAND\DLV\IMPROVE\SD\166009-06-SD.DWG ADACHI, CHAD 2/7/2019 7:58 AM

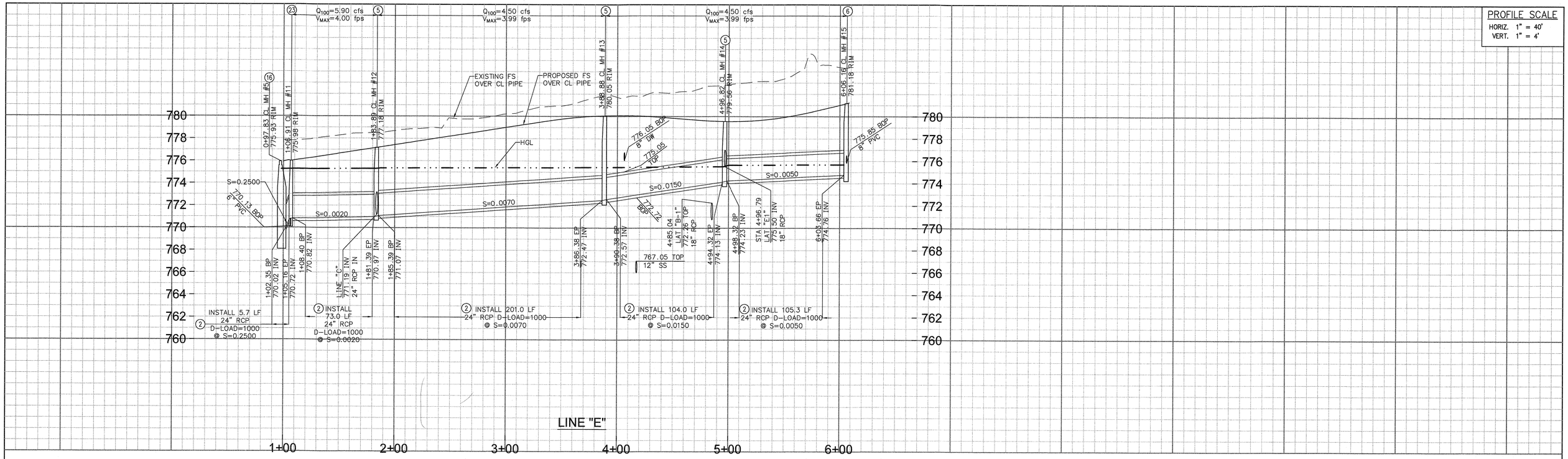

CONSTRUCTION NOTES

2	INSTALL 24" RCP STORM DRAIN PIPE (D-LOAD PER PLAN)
5	CONSTRUCT MANHOLE EZ PER CITY OF RIVERSIDE STD. NO. 431
6	CONSTRUCT TYPE 1 CATCH BASIN PER CITY OF RIVERSIDE STD NO. 400 (W PER PLAN)
16	CONSTRUCT MANHOLE JM PER CITY OF RIVERSIDE STD. NO. 432
22	INSTALL 6" PVC SDR35 STORM DRAIN PIPE
23	INSTALL MANHOLE DIVERSION STRUCTURE PER DETAIL ON SHEET 10

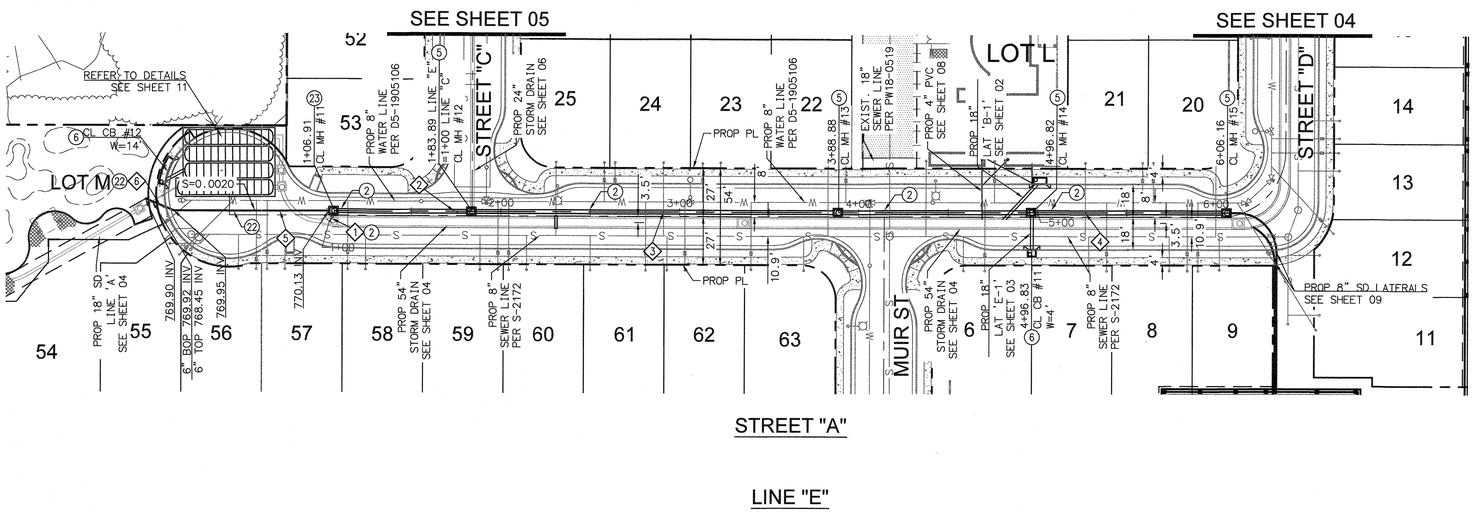

LINE/CURVE DATA TABLE

NO	BEARING/DELTA	RADIUS	LENGTH
1	N 06°02'07" E	--	4.49'
2	N 56°21'42" E	--	73.82'
3	N 56°21'38" E	--	205.65'
4	N 56°21'37" E	--	217.95'
5	N 56°21'37" E	--	86.64'
6	N 79°11'37" E	--	17.06'

SCALE 1"=40'

40 20 0 40 80 120
SCALE: 1"=40'

WDID NO. 833C383218

UNDERGROUND SERVICE ALERT
IMPORTANT NOTICE
Section 4216/4217 of the Government Code requires a Dig Alert Identification Number to be issued before a "Permit to Excavate" will be valid. For your Dig Alert I.D. Number call CALL TOLL FREE 48 HOURS BEFORE YOU DIG
1-800-227-2600
TWO WORKING DAYS BEFORE YOU WORK

BENCHMARK
DESIGNATION: NGS DX2781 (ALSO RIV. CO. BM 0-38)
DESCRIPTION: AT ARLINGTON, RIVERSIDE COUNTY, AT THE INTERSECTION OF MAGNOLIA AND ROOSEVELT STREETS AT THE ARLINGTON BRANCH OF THE RIVERSIDE PUBLIC LIBRARY, ON THE EAST SIDE OF THE MAIN ENTRANCE, AND ABOUT 1 FOOT ABOVE THE GROUND. A STANDARD DISK, STAMPED 0 38 1924.
ELEVATION: (NAVD88) 790.82 FEET

CITY OF RIVERSIDE
PUBLIC UTILITIES DEPARTMENT
WATER DIVISION
APPROVED BY: 2/12/19 DATE
VOID ONE YEAR FROM THIS DATE

Michael Baker
INTERNATIONAL
3536 CONCOURS ST., SUITE 100
ONTARIO, CA 91764

ENGINEER IN RESPONSIBLE CHARGE
MAURICIO M. IACUELLI
R.C.E. No. 63249 EXPIRES 6/30/20
DATE 02/07/2019

REGISTERED PROFESSIONAL ENGINEER
MAURICIO M. IACUELLI
No. 63249
CIVIL
STATE OF CALIFORNIA

MARK	REVISIONS	APPR.	DATE

DESIGNED BY WS DRAWN BY WS CHECKED BY MMI

CITY OF RIVERSIDE, CALIFORNIA
PUBLIC WORKS DEPARTMENT

APPROVED BY	BY	DATE
PRINCIPAL ENGINEER		
ENGINEERING MANAGER		

APPROVED BY
CITY ENGINEER
DATE 2-28-19

PRIMROSE RESIDENTIAL - TRACT 37219
PRIVATE STORM DRAIN PLANS
PLAN AND PROFILE LINE E
PRIMROSE AVENUE, RIVERSIDE
HORIZONTAL SCALE: PER PLAN VERTICAL SCALE: PER PLAN

PW18-0520
D-900
SHEET 07 OF 11

H:\PDATA\166009\CADD\LAND\DLV\IMPROVE\SD\166009-07-SD.DWG ADACHI, CHAD 2/7/2019 7:59 AM

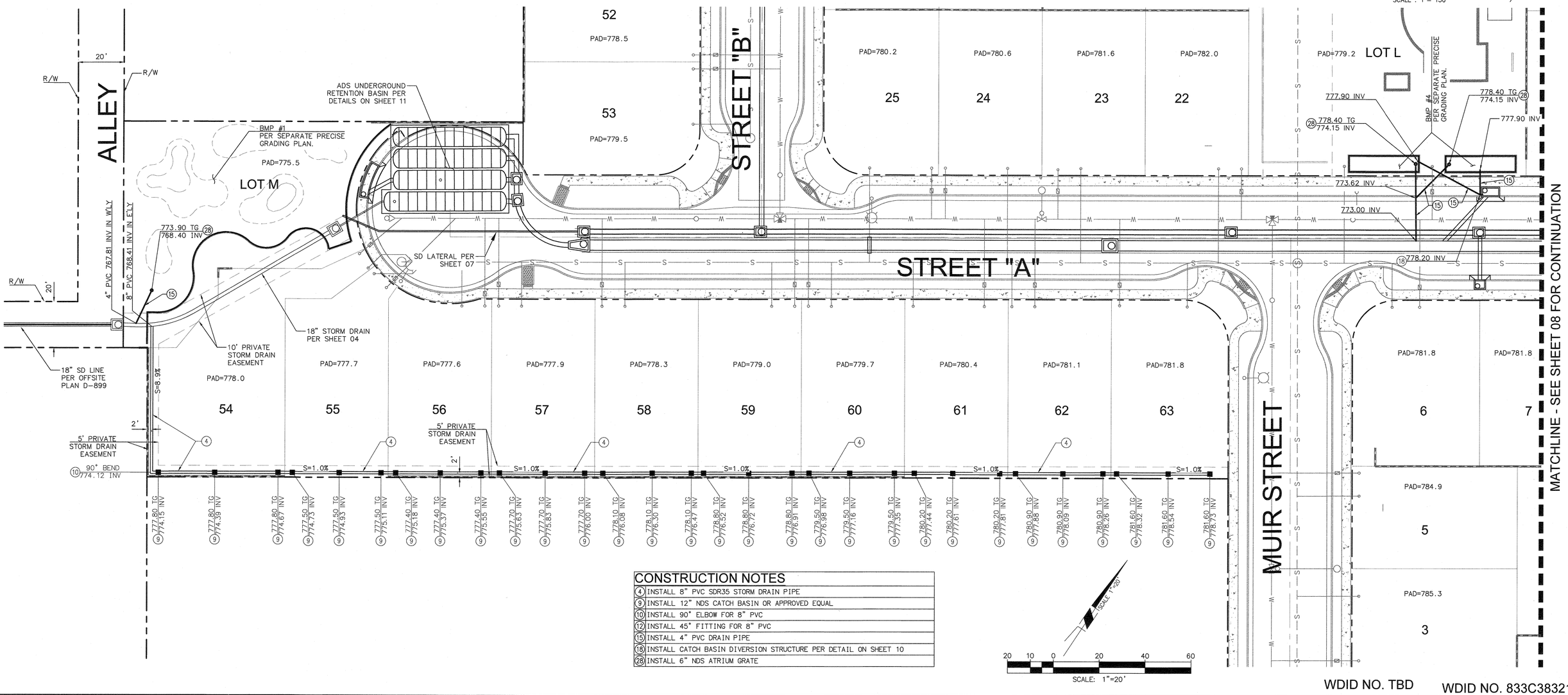

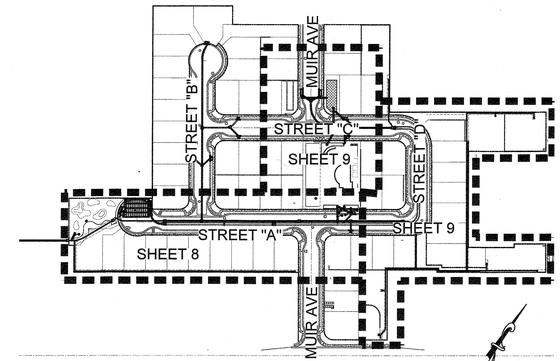

INDEX MAP

SCALE : 1"= 150'

CONSTRUCTION NOTES	
4	INSTALL 8" PVC SDR35 STORM DRAIN PIPE
9	INSTALL 12" NDS CATCH BASIN OR APPROVED EQUAL
10	INSTALL 90° ELBOW FOR 8" PVC
12	INSTALL 45° FITTING FOR 8" PVC
15	INSTALL 4" PVC DRAIN PIPE
18	INSTALL CATCH BASIN DIVERSION STRUCTURE PER DETAIL ON SHEET 10
28	INSTALL 6" NDS ATRIUM GRATE

WDID NO. TBD

WDID NO. 833C383218

UNDERGROUND SERVICE ALERT
IMPORTANT NOTICE
Section 4216/4217 of the Government Code requires a Dig Alert Identification Number to be issued before a "Permit to Excavate" will be valid. For your Dig Alert I.D. Number call CALL TOLL FREE 48 HOURS BEFORE YOU DIG
1-800-227-2600
TWO WORKING DAYS BEFORE YOU WORK

BENCHMARK
DESIGNATION: NGS DX2781 (ALSO RIV. CO. BM 0-38)
DESCRIPTION: AT ARLINGTON, RIVERSIDE COUNTY, AT THE INTERSECTION OF MAGNOLIA AND ROOSEVELT STREETS AT THE ARLINGTON BRANCH OF THE RIVERSIDE PUBLIC LIBRARY, ON THE EAST SIDE OF THE MAIN ENTRANCE, AND ABOUT 1 FOOT ABOVE THE GROUND. A STANDARD DISK, STAMPED 0 38 1924.
ELEVATION: (NAVD88) 790.82 FEET

CITY OF RIVERSIDE
PUBLIC UTILITIES DEPARTMENT
WATER DIVISION
APPROVED BY: 2/12/19 DATE
VOID ONE YEAR FROM THIS DATE

Michael Baker INTERNATIONAL
3536 CONCOURS ST., SUITE 100
ONTARIO, CA 91764

ENGINEER IN RESPONSIBLE CHARGE
MAURICIO M. IACUELLI
R.C.E. No. 63249 EXPIRES 6/30/20
DATE 02/07/2019

REGISTERED PROFESSIONAL ENGINEER MAURICIO M. IACUELLI No. 63249 CIVIL STATE OF CALIFORNIA

MARK	REVISIONS	APPR.	DATE

DESIGNED BY WS DRAWN BY WS CHECKED BY MMI

CITY OF RIVERSIDE, CALIFORNIA
PUBLIC WORKS DEPARTMENT

APPROVED BY	BY	DATE
PRINCIPAL ENGINEER		2/12/19
ENGINEERING MANAGER		2/12/19

APPROVED BY
CITY ENGINEER
DATE 2-28-19

PRIMROSE RESIDENTIAL - TRACT 37219
PRIVATE STORM DRAIN PLANS
YARD DRAIN PLANS
PRIMROSE AVENUE, RIVERSIDE
HORIZONTAL SCALE: PER PLAN VERTICAL SCALE: PER PLAN

PW18-0520
D-900
SHEET 08 OF 11

\\ONTACA1FS1\HROOT\PDATA\166009\CADD\LAND\DLV\IMPROVE\SD\166009-08-SD.DWG ADACHI, CHAD 2/6/2019 12:21 PM

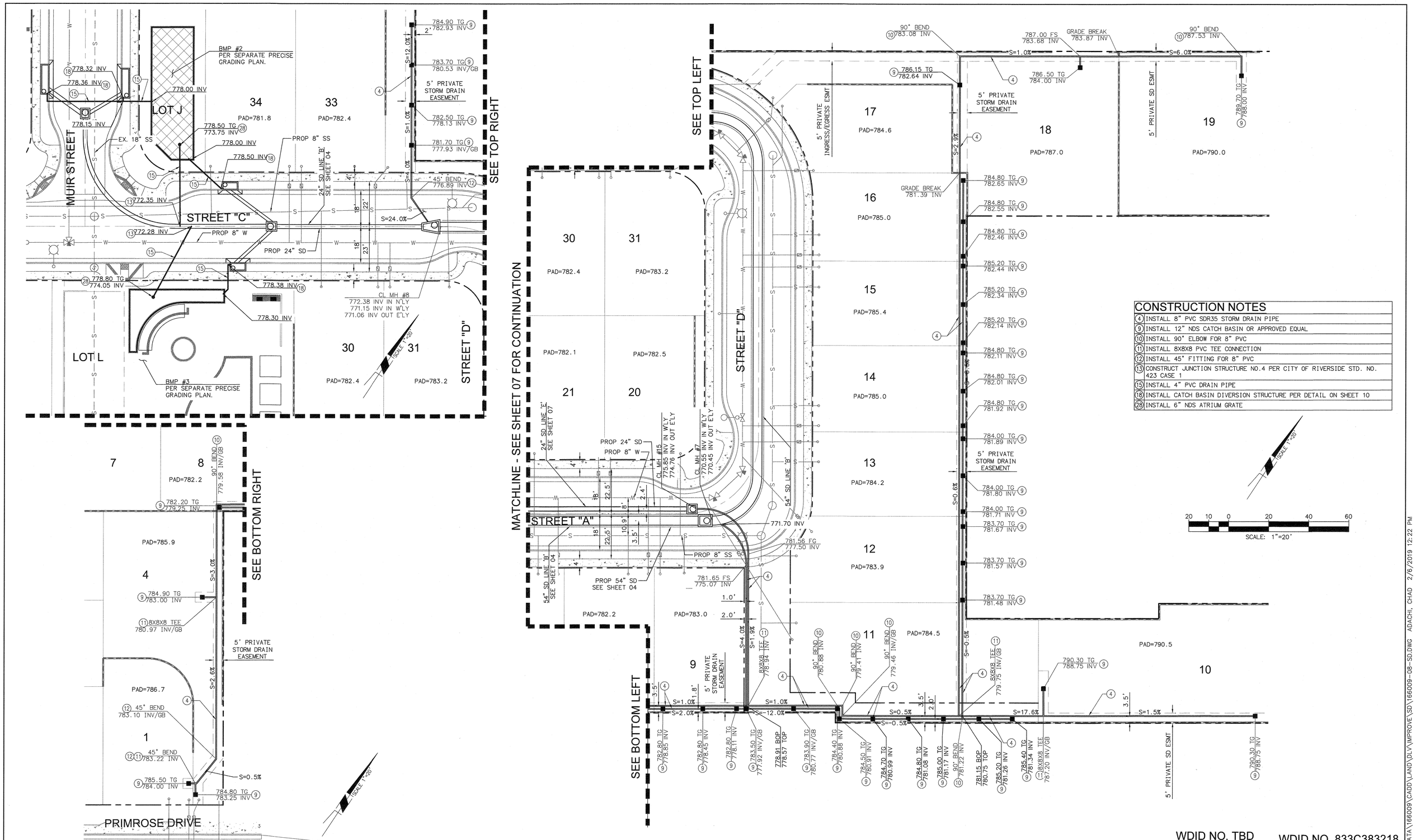

CONSTRUCTION NOTES

4	INSTALL 8" PVC SDR35 STORM DRAIN PIPE
9	INSTALL 12" NDS CATCH BASIN OR APPROVED EQUAL
10	INSTALL 90° ELBOW FOR 8" PVC
11	INSTALL 8X8X8 PVC TEE CONNECTION
12	INSTALL 45° FITTING FOR 8" PVC
13	CONSTRUCT JUNCTION STRUCTURE NO.4 PER CITY OF RIVERSIDE STD. NO. 423 CASE 1
15	INSTALL 4" PVC DRAIN PIPE
18	INSTALL CATCH BASIN DIVERSION STRUCTURE PER DETAIL ON SHEET 10
28	INSTALL 6" NDS ATRIUM GRATE

WDID NO. TBD

WDID NO. 833C383218

UNDERGROUND SERVICE ALERT
IMPORTANT NOTICE
Section 4216/4217 of the Government Code requires a Dig Alert Identification Number to be issued before a "Permit to Excavate" will be valid. For your Dig Alert I.D. Number call
CALL TOLL FREE
48 HOURS BEFORE YOU DIG
1-800-227-2600
TWO WORKING DAYS BEFORE YOU WORK

BENCHMARK
DESIGNATION: NGS DX2781 (ALSO RIV. CO. BM 0-38)
DESCRIPTION: AT ARLINGTON, RIVERSIDE COUNTY, AT THE INTERSECTION OF MAGNOLIA AND ROOSEVELT STREETS AT THE ARLINGTON BRANCH OF THE RIVERSIDE PUBLIC LIBRARY, ON THE EAST SIDE OF THE MAIN ENTRANCE, AND ABOUT 1 FOOT ABOVE THE GROUND. A STANDARD DISK, STAMPED 0 38 1924.
ELEVATION: (NAVD88) 790.82 FEET

CITY OF RIVERSIDE
PUBLIC UTILITIES DEPARTMENT
WATER DIVISION
APPROVED BY 2/12/19 DATE
VOID ONE YEAR FROM THIS DATE

Michael Baker
INTERNATIONAL
3536 CONCOURS ST., SUITE 100
ONTARIO, CA 91764

ENGINEER IN RESPONSIBLE CHARGE
MAURICIO M. IACUELLI
R.C.E. No. 63249 EXPIRES 6/30/20
DATE 02/07/2019

REGISTERED PROFESSIONAL ENGINEER MAURICIO M. IACUELLI No. 63249 CIVIL STATE OF CALIFORNIA

MARK	REVISIONS	APPR.	DATE

DESIGNED BY WS DRAWN BY WS CHECKED BY MMI

CITY OF RIVERSIDE, CALIFORNIA
PUBLIC WORKS DEPARTMENT

APPROVED BY	BY	DATE
PRINCIPAL ENGINEER		
ENGINEERING MANAGER		

APPROVED BY
CITY ENGINEER
DATE 2-28-19

PRIMROSE RESIDENTIAL - TRACT 37219
PRIVATE STORM DRAIN PLANS
YARD DRAIN PLANS
PRIMROSE AVENUE, RIVERSIDE
HORIZONTAL SCALE: PER PLAN VERTICAL SCALE: PER PLAN

PW18-0520
D-900
SHEET 09 OF 11

\\ONTACAIFS1\HROOT\PDATA\166009\CADD\LAND\DLV\MPROVE\SD\166009-08-SD.DWG ADACHI, CHAD 2/6/2019 12:22 PM

NOTES:

1. ALL DIMENSIONS, REINFORCEMENT, CONCRETE, NOTES, AND CALLOUTS SHALL CONFORM TO THE CITY OF RIVERSIDE STANDARD PLAN No. 431, EXCEPT WHERE NOTED HEREON.

2. SEE THE CITY OF RIVERSIDE STANDARD PLAN No. 431 FOR ANY VIEW, SECTION, OR DETAIL NOT SHOWN.

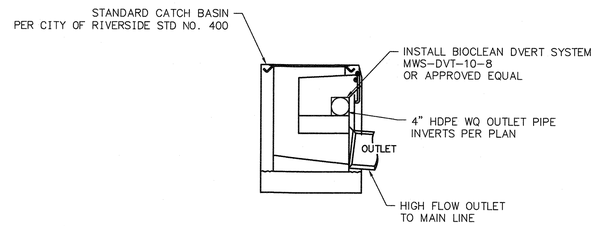

SECTION C-C

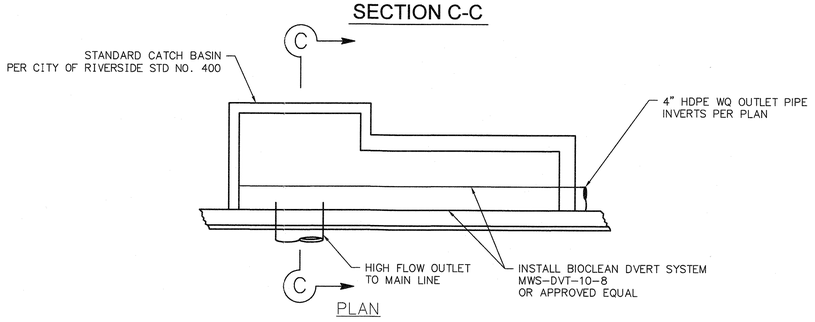

PLAN

DIVERTING STRUCTURE DETAIL
AT CATCH BASIN (18)
NOT TO SCALE

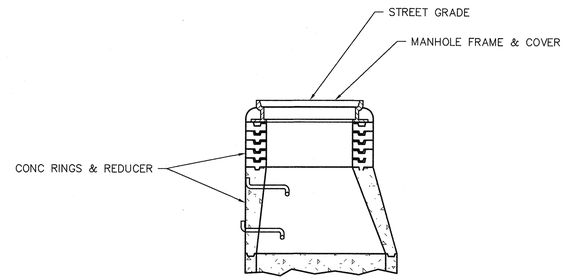

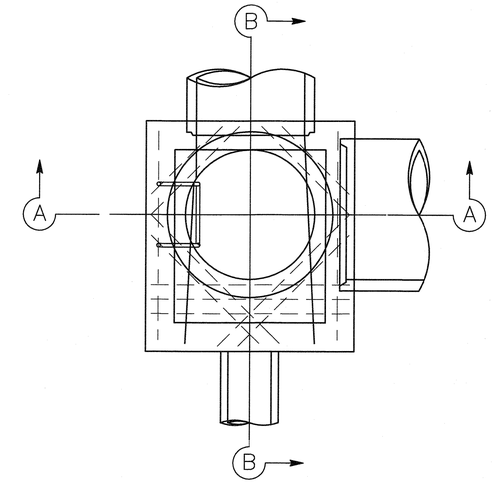

PLAN

(SHAFT NOT SHOWN)

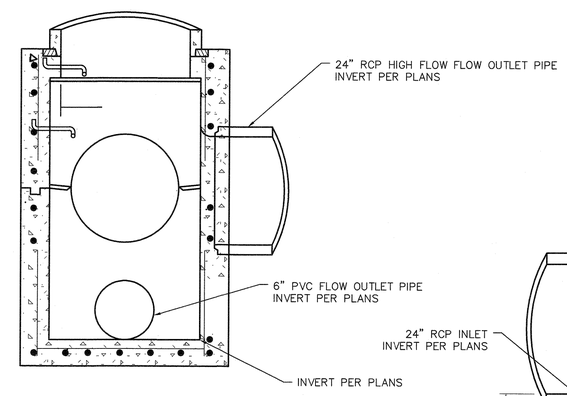

SECTION A-A

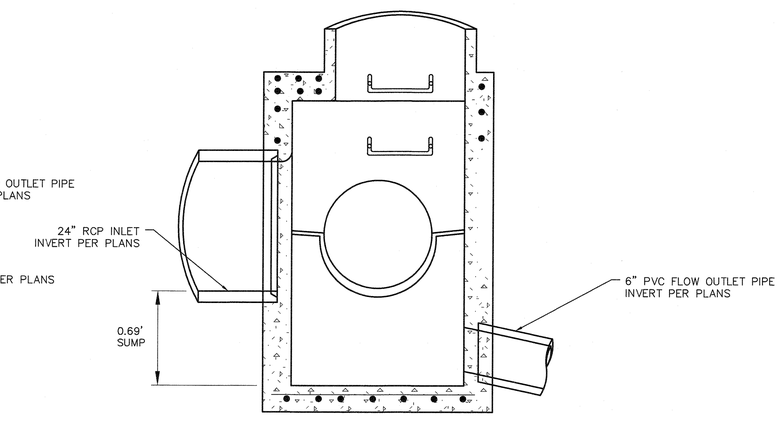

SECTION B-B

DIVERTING STRUCTURE DETAIL
AT JUNCTION STRUCTURE (23)
NOT TO SCALE

WDID NO. 833C383218

UNDERGROUND SERVICE ALERT
IMPORTANT NOTICE
Section 4216/4217 of the Government Code requires a Dig Alert Identification Number to be issued before a "Permit to Excavate" will be valid. For your Dig Alert I.D. Number call
CALL TOLL FREE
48 HOURS BEFORE YOU DIG
1-800-227-2600
TWO WORKING DAYS BEFORE YOU WORK

BENCHMARK
DESIGNATION: NGS DX2781 (ALSO RIV. CO. BM 0-38)
DESCRIPTION: AT ARLINGTON, RIVERSIDE COUNTY, AT THE INTERSECTION OF MAGNOLIA AND ROOSEVELT STREETS AT THE ARLINGTON BRANCH OF THE RIVERSIDE PUBLIC LIBRARY, ON THE EAST SIDE OF THE MAIN ENTRANCE, AND ABOUT 1 FOOT ABOVE THE GROUND. A STANDARD DISK, STAMPED 0 38 1924.

ELEVATION: (NAVD88) 790.82 FEET

CITY OF RIVERSIDE
PUBLIC UTILITIES DEPARTMENT
WATER DIVISION
APPROVED BY: 2/12/19 DATE
VOID ONE YEAR FROM THIS DATE

Michael Baker
INTERNATIONAL
3536 CONCOURS ST., SUITE 100
ONTARIO, CA 91764

ENGINEER IN RESPONSIBLE CHARGE
MAURICIO M. IACUELLI
R.C.E. No. 63249 EXPIRES 6/30/20
DATE 02/07/2019

REGISTERED PROFESSIONAL ENGINEER
MAURICIO M. IACUELLI
No. 63249
CIVIL
STATE OF CALIFORNIA

MARK	REVISIONS	APPR.	DATE

DESIGNED BY WS DRAWN BY WS CHECKED BY MMI

CITY OF RIVERSIDE, CALIFORNIA
PUBLIC WORKS DEPARTMENT

APPROVED BY	BY	DATE
PRINCIPAL ENGINEER		
ENGINEERING MANAGER		

APPROVED BY
CITY ENGINEER
DATE 2-28-19

PRIMROSE RESIDENTIAL - TRACT 37219
PRIVATE STORM DRAIN PLANS
DETAILS SHEET
PRIMROSE AVENUE, RIVERSIDE
HORIZONTAL SCALE: PER PLAN VERTICAL SCALE: PER PLAN

PW18-0520
D-900
SHEET 10 OF 11

\\CONTACAIFS1\HROOT\PDATA\166009\CADD\LAND\DLV\MPROVE\SD\166009-08-SD.DWG ADACHI, CHAD 2/6/2019 12:23 PM

PROJECT INFORMATION	
ENGINEERS/ PRODUCT MANAGER:	TAWENCE ZHAO 909-425-2974 TAWENCEZHAO@ADS-PIPE.COM
ADS SALES REP:	MATT VOECK 714-563-6863 MATT.VOECK@ADS-PIPE.COM
PROJECT NO:	ENG2273

ADVANCED DRAINAGE SYSTEMS, INC.

PRIMROSE RESIDENTIAL - TRACT 37219

RIVERSIDE, CA

STORMTECH CHAMBER SPECIFICATIONS

1. CHAMBERS SHALL BE STORMTECH MC-4500.
2. CHAMBERS SHALL BE MANUFACTURED FROM VIRGIN, IMPACT-MODIFIED POLYPROPYLENE COPOLYMERS.
3. CHAMBER ROWS SHALL PROVIDE CONTINUOUS, UNOBSTRUCTED INTERNAL SPACE WITH NO INTERNAL SUPPORT PANELS THAT WOULD IMPEDE FLOW OR LIMIT ACCESS FOR INSPECTION.
4. THE STRUCTURAL DESIGN OF THE CHAMBERS, THE STRUCTURAL BACKFILL, AND THE INSTALLATION REQUIREMENTS SHALL ENSURE THAT THE LOAD FACTORS SPECIFIED IN THE AASHTO LRFD BRIDGE DESIGN SPECIFICATIONS, SECTION 12.12, ARE MET FOR: 1) LONG-DURATION DEAD LOADS AND 2) SHORT-DURATION LIVE LOADS, BASED ON THE AASHTO DESIGN TRUCK WITH CONSIDERATION FOR IMPACT AND MULTIPLE VEHICLE PRESENCES.
5. CHAMBERS SHALL MEET THE REQUIREMENTS OF ASTM F24 16-16, "STANDARD SPECIFICATION FOR POLYPROPYLENE (PP) CORRUGATED WALL STORMWATER COLLECTION CHAMBERS".
6. CHAMBERS SHALL BE DESIGNED AND ALLOWABLE LOADS DETERMINED IN ACCORDANCE WITH ASTM F2787, "STANDARD PRACTICE FOR STRUCTURAL DESIGN OF THERMOPLASTIC CORRUGATED WALL STORMWATER COLLECTION CHAMBERS".
7. ONLY CHAMBERS THAT ARE APPROVED BY THE SITE DESIGN ENGINEER WILL BE ALLOWED. THE CHAMBER MANUFACTURER SHALL SUBMIT THE FOLLOWING UPON REQUEST TO THE SITE DESIGN ENGINEER FOR APPROVAL BEFORE DELIVERING CHAMBERS TO THE PROJECT SITE:
   a. A STRUCTURAL EVALUATION SEALED BY A REGISTERED PROFESSIONAL ENGINEER THAT DEMONSTRATES THAT THE SAFETY FACTORS ARE GREATER THAN OR EQUAL TO 1.95 FOR DEAD LOAD AND 1.75 FOR LIVE LOAD, THE MINIMUM REQUIRED BY ASTM F2787 AND BY AASHTO FOR THERMOPLASTIC PIPE.
   b. A STRUCTURAL EVALUATION SEALED BY A REGISTERED PROFESSIONAL ENGINEER THAT DEMONSTRATES THAT THE LOAD FACTORS SPECIFIED IN THE AASHTO LRFD BRIDGE DESIGN SPECIFICATIONS, SECTION 12.12, ARE MET. THE: 50 YEAR CREEP MODULUS OF ELASTICITY FOR THE ASTM F2418 RESIN MUST BE USED AS PART OF THE AASHTO STRUCTURAL EVALUATION TO VERIFY LONG-TERM PERFORMANCE.
   c. STRUCTURAL CROSS SECTION DETAIL ON WHICH THE STRUCTURAL EVALUATION IS BASED.
8. CHAMBERS AND END CAPS SHALL BE PRODUCED AT AN ISO 9001 CERTIFIED MANUFACTURING FACILITY.

IMPORTANT - NOTES FOR THE BIDDING AND INSTALLATION OF MC-4500 CHAMBER SYSTEM

1. STORMTECH MC-4500 CHAMBERS SHALL NOT BE INSTALLED UNTIL THE MANUFACTURER'S REPRESENTATIVE HAS COMPLETED A PRE-CONSTRUCTION MEETING WITH THE INSTALLERS.
2. STORMTECH MC-4500 CHAMBERS SHALL BE INSTALLED IN ACCORDANCE WITH THE "STORMTECH MC-3500/MC-4500 CONSTRUCTION GUIDE".
3. CHAMBERS ARE NOT TO BE BACKFILLED WITH A DOZER OR EXCAVATOR SITUATED OVER THE CHAMBERS. STORMTECH RECOMMENDS 3 BACKFILL METHODS:
   - STONESHOOTER LOCATED OFF THE CHAMBER BED.
   - BACKFILL FROM A PILE LOCATED ON THE CHAMBER BED OR ON THE FOUNDATION STONE OR SUBGRADE.
   - BACKFILL FROM OUTSIDE THE EXCAVATION USING A LONG BOOM HOE OR EXCAVATOR.
4. THE FOUNDATION STONE SHALL BE LEVELED AND COMPACTED PRIOR TO PLACING CHAMBERS.
5. JOINTS BETWEEN CHAMBERS SHALL BE PROPERLY SEATED PRIOR TO PLACING STONE.
6. MINIMUM MINIMUM 9" (230 mm) SPACING BETWEEN THE CHAMBER ROWS.
7. INLET AND OUTLET MANIFOLDS MUST BE INSERTED A MINIMUM OF 12" (300 mm) INTO CHAMBER END CAPS.
8. EMBEDMENT STONE SURROUNDING CHAMBERS MUST BE A CLEAN, CRUSHED, ANGULAR STONE MEETING THE AASHTO M43 DESIGNATION OF #3 OR #4.
9. STONE SHALL BE BROUGHT UP EVENLY AROUND CHAMBERS SO AS NOT TO DISTORT THE CHAMBER SHAPE. STONE DEPTHS SHOULD NEVER DIFFER BY MORE THAN 12" (300 mm) BETWEEN ADJACENT CHAMBER ROWS.
10. STONE MUST BE PLACED ON THE TOP CENTER OF THE CHAMBER TO ANCHOR THE CHAMBERS IN PLACE AND PRESERVE ROW SPACING.
11. THE CONTRACTOR MUST REPORT ANY DISCREPANCIES WITH CHAMBER FOUNDATION MATERIAL BEARING CAPACITIES TO THE SITE DESIGN ENGINEER.
12. ADS RECOMMENDS THE USE OF "FLEXSTORM CATCH IT" INSERTS DURING CONSTRUCTION FOR ALL INLETS TO PROTECT THE SUBSURFACE STORMWATER MANAGEMENT SYSTEM FROM CONSTRUCTION SITE RUNOFF.

NOTES FOR CONSTRUCTION EQUIPMENT

1. STORMTECH MC-4500 CHAMBERS SHALL BE INSTALLED IN ACCORDANCE WITH THE "STORMTECH MC-3500/MC-4500 CONSTRUCTION GUIDE".
2. THE USE OF EQUIPMENT OVER MC-4500 CHAMBERS IS LIMITED:
   - NO EQUIPMENT IS ALLOWED ON BARE CHAMBERS.
   - NO RUBBER TIRED LOADER, DUMP TRUCK, OR EXCAVATORS ARE ALLOWED UNTIL PROPER FILL DEPTHS ARE REACHED IN ACCORDANCE WITH THE "STORMTECH MC-3500/MC-4500 CONSTRUCTION GUIDE".
   - WEIGHT LIMITS FOR CONSTRUCTION EQUIPMENT CAN BE FOUND IN THE "STORMTECH MC-3500/MC-4500 CONSTRUCTION GUIDE".
3. FULL 36" (900 mm) OF STABILIZED COVER MATERIALS OVER THE CHAMBERS IS REQUIRED FOR DUMP TRUCK TRAVEL OR DUMPING.

USE OF A DOZER TO PUSH EMBEDMENT STONE BETWEEN THE ROWS OF CHAMBERS MAY CAUSE DAMAGE TO CHAMBERS AND IS NOT AN ACCEPTABLE BACKFILL METHOD. ANY CHAMBERS DAMAGED BY USING THE "DOMP AND PUSH" METHOD ARE NOT COVERED UNDER THE STORMTECH STANDARD WARRANTY.

CONTACT STORMTECH AT 1-888-892-2694 WITH ANY QUESTIONS ON INSTALLATION REQUIREMENTS OR WEIGHT LIMITS FOR CONSTRUCTION EQUIPMENT.

SM10-MC-IND

PROPOSED LAYOUT

48	STORMTECH MC-4500 CHAMBERS
8	STORMTECH MC-4500 END CAPS
12	STONE ABOVE (in)
9	STONE BELOW (in)
40	% STONE VOID
8611	**INSTALLED SYSTEM VOLUME (CF) (PERIMETER STONE INCLUDED)**
2185	SYSTEM AREA (ft²)
195	SYSTEM PERIMETER (ft)

PROPOSED ELEVATIONS

779.48	MAXIMUM ALLOWABLE GRADE (TOP OF PAVEMENT/UNPAVED)
774.98	MINIMUM ALLOWABLE GRADE (UNPAVED WITH TRAFFIC)
774.48	MINIMUM ALLOWABLE GRADE (UNPAVED NO TRAFFIC)
774.48	MINIMUM ALLOWABLE GRADE (BASE OF FLEXIBLE PAVEMENT)
773.48	MINIMUM ALLOWABLE GRADE (TOP OF RIGID PAVEMENT)
773.48	TOP OF STONE
772.48	TOP OF MC-4500 CHAMBER
769.42	24" TOP MANIFOLD INVERT
767.98	8" CUSTOM INVERT CONNECTION INVERT
767.67	24" ISOLATOR ROW CONNECTION INVERT
767.67	24" BOTTOM CONNECTION INVERT
767.48	24" BOTTOM MANIFOLD INVERT
767.48	BOTTOM OF MC-4500 CHAMBER
766.73	BOTTOM OF STONE

NOTES

1. MANIFOLD SIZE TO BE DETERMINED BY SITE DESIGN ENGINEER. SEE TECH SHEET #7 FOR MANIFOLD SIZING GUIDANCE.
2. DUE TO THE ADAPTATION OF THIS CHAMBER SYSTEM TO SPECIFIC SITE AND DESIGN CONSTRAINTS, IT MAY BE NECESSARY TO CUT AND COUPLE ADDITIONAL PIPE TO STANDARD MANIFOLD COMPONENTS IN THE FIELD.
3. THE SITE DESIGN ENGINEER MUST REVIEW ELEVATIONS AND IF NECESSARY ADJUST GRADING TO ENSURE THE CHAMBER COVER REQUIREMENTS ARE MET.
4. THIS PRELIMINARY LAYOUT WAS DESIGNED WITHOUT SITE-SPECIFIC INFORMATION ON SOIL CONDITIONS OR BEARING CAPACITY. THE SITE DESIGN ENGINEER IS RESPONSIBLE FOR DETERMINING THE SUITABILITY OF THE SOIL AND PROVIDING THE BEARING CAPACITY OF THE INSITU SOILS. THE BASE STONE DEPTH MAY BE INCREASED OR DECREASED ONCE THIS INFORMATION IS PROVIDED.
5. THE SITE DESIGN ENGINEER MUST REVIEW THE PROXIMITY OF THE CHAMBERS TO THE RETAINING WALL AND CONSIDER THE POTENTIAL FOUNDATION SOIL SWELL WHEN WETTED WHEN PLACING CHAMBERS.
6. THIS PLAN REFLECTS THE CHAMBER SYSTEM DESIGN BY THE SITE DESIGN ENGINEER USING STORMTECH COMPONENTS. THE SUITABILITY OF THE CHAMBER SYSTEM TO MEET ANY FUNCTIONAL REQUIREMENTS ARE THE RESPONSIBILITY OF THE SITE DESIGN ENGINEER. STORMTECH'S SCOPE OF WORK IS LIMITED TO THE ASSEMBLED PRODUCT DIMENSIONS AND SPECIFICATIONS FOR INSTALLATION.

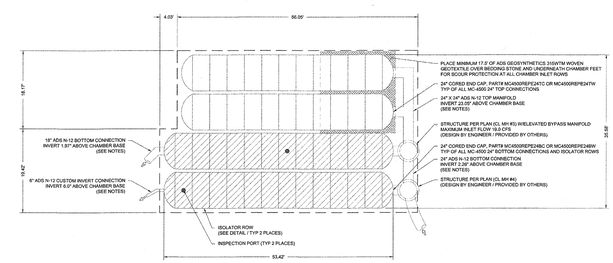

STORMTECH
4640 TRUEMAN BLVD
HILLIARD, OH 43026
(800) 821-5830
www.stormtech.com

ADS
4640 TRUEMAN BLVD
HILLIARD, OH 43026

PRIMROSE RESIDENTIAL - TRACT 37219
RIVERSIDE, CA
DATE: 10/24/18 DRAWN: SDM
PROJECT # ENG2273 CHECKED: JPR

SHEET 2 OF 5

ACCEPTABLE FILL MATERIALS: STORMTECH MC-4500 CHAMBER SYSTEMS

	MATERIAL LOCATION	DESCRIPTION	AASHTO MATERIAL CLASSIFICATIONS	COMPACTION / DENSITY REQUIREMENT
D	**FINAL FILL:** FILL MATERIAL FOR LAYER 'D' STARTS FROM THE TOP OF THE SUBBASE TO THE BOTTOM OF FLEXIBLE PAVEMENT OR UNPAVED FINISHED GRADE ABOVE. NOTE THAT PAVEMENT SUBBASE MAY BE PART OF THE 'D' LAYER.	ANY SOILS/ROCK MATERIALS, NATIVE SOILS, OR PER ENGINEER'S PLANS. CHECK PLANS FOR PAVEMENT SUBGRADE REQUIREMENTS.	N/A	PREPARE PER SITE DESIGN ENGINEER'S PLANS. PAVED INSTALLATIONS MAY HAVE STRINGENT MATERIAL AND PREPARATION REQUIREMENTS.
C	**INITIAL FILL:** FILL MATERIAL FOR LAYER 'C' STARTS FROM THE TOP OF THE EMBEDMENT STONE TO THE BOTTOM OF FLEXIBLE PAVEMENT OR TOP OF THE CHAMBER. NOTE THAT PAVEMENT SUBBASE MAY BE A PART OF THE 'C' LAYER.	GRANULAR WELL-GRADED SOIL/AGGREGATE MIXTURES, <35% FINES OR PROCESSED AGGREGATE. MOST PAVEMENT SUBBASE MATERIALS CAN BE USED IN LIEU OF THIS LAYER.	AASHTO M145* A-1, A-2-4, A-3 OR AASHTO M43* 3, 357, 4, 467, 5, 56, 57, 6, 67, 68, 7, 78, 8, 89, 9, 10	BEGIN COMPACTIONS AFTER 24" (600 mm) OF MATERIAL OVER THE CHAMBERS IS REACHED. COMPACT ADDITIONAL LAYERS IN 12" (300 mm) MAX LIFTS TO A MINIMUM OF 95% RELATIVE DENSITY FOR WELL GRADED MATERIAL AND 95% RELATIVE DENSITY FOR PROCESSED AGGREGATE MATERIALS.
B	**EMBEDMENT STONE:** FILL SURROUNDING THE CHAMBERS FROM THE FOUNDATION STONE (A' LAYER) TO THE 'C' LAYER ABOVE.	CLEAN, CRUSHED, ANGULAR STONE.	AASHTO M43* 3, 4	NO COMPACTION REQUIRED.
A	**FOUNDATION STONE:** FILL BELOW CHAMBERS FROM THE SUBGRADE UP TO THE FOOT (BOTTOM) OF THE CHAMBER.	CLEAN, CRUSHED, ANGULAR STONE	AASHTO M43* 3, 4	PLATE COMPACT OR ROLL TO ACHIEVE A FLAT SURFACE.**

PLEASE NOTE:
1. THE LISTED AASHTO DESIGNATIONS ARE FOR GRADATIONS ONLY. THE STONE MUST ALSO BE: CLEAN, CRUSHED, ANGULAR. FOR EXAMPLE, A SPECIFICATION FOR #4 STONE WOULD STATE: "CLEAN, CRUSHED, ANGULAR NO. 4 (AASHTO M43) STONE".
2. ALL PLACEMENT & COMPACTION REQUIREMENTS ARE MET FOR 'A' LOCATION MATERIALS WHEN PLACED AND COMPACTED IN 9" (230 mm) (MAX) LIFTS USING TWO FULL COVERAGES WITH A VIBRATORY COMPACTOR.
3. WHERE INFILTRATION SURFACES MAY BE COMPROMISED BY COMPACTION, FOR STANDARD DESIGN LOAD CONDITIONS, A FLAT SURFACE MAY BE ACHIEVED BY RAKING OR DRAGGING WITHOUT COMPACTION EQUIPMENT. FOR SPECIAL LOAD DESIGNS, CONTACT STORMTECH FOR COMPACTION REQUIREMENTS.

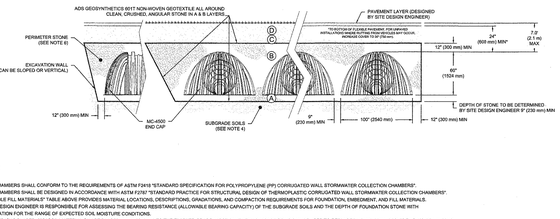

NOTES:

1. MC-4500 CHAMBERS SHALL CONFORM TO THE REQUIREMENTS OF ASTM F2418 "STANDARD SPECIFICATION FOR POLYPROPYLENE (PP) CORRUGATED WALL STORMWATER COLLECTION CHAMBERS".
2. MC-4500 CHAMBERS SHALL BE DESIGNED IN ACCORDANCE WITH ASTM F2787 "STANDARD PRACTICE FOR STRUCTURAL DESIGN OF THERMOPLASTIC CORRUGATED WALL STORMWATER COLLECTION CHAMBERS".
3. "ACCEPTABLE FILL MATERIALS" TABLE ABOVE PROVIDES MATERIAL LOCATIONS, DESCRIPTIONS, GRADATIONS, AND COMPACTION REQUIREMENTS FOR FOUNDATION, EMBEDMENT, AND FILL MATERIALS.
4. THE SITE DESIGN ENGINEER IS RESPONSIBLE FOR ASSESSING THE BEARING RESISTANCE (ALLOWABLE BEARING CAPACITY) OF THE SUBGRADE SOILS AND THE DEPTH OF FOUNDATION STONE WITH CONSIDERATION FOR THE RANGE OF EXPECTED SOIL MOISTURE CONDITIONS.
5. ONCE LAYER 'C' IS PLACED, ANY SOIL/MATERIAL CAN BE PLACED IN LAYER 'D' UP TO THE FINISHED GRADE. NOT PAVEMENT SUBBASE SOILS CAN BE USED TO REPLACE THE MATERIAL REQUIREMENTS OF LAYER 'C' OR 'D' AT THE SITE DESIGN ENGINEER'S DISCRETION.
6. PERIMETER STONE MUST BE EXTENDED HORIZONTALLY TO THE EXCAVATION WALL FOR BOTH VERTICAL AND SLOPED EXCAVATION WALLS.

STORMTECH
4640 TRUEMAN BLVD
HILLIARD, OH 43026
(800) 821-5830
www.stormtech.com

ADS
4640 TRUEMAN BLVD
HILLIARD, OH 43026

PRIMROSE RESIDENTIAL - TRACT 37219
RIVERSIDE, CA
DATE: 10/24/18 DRAWN: SDM
PROJECT # ENG2273 CHECKED: JPR

SHEET 3 OF 5

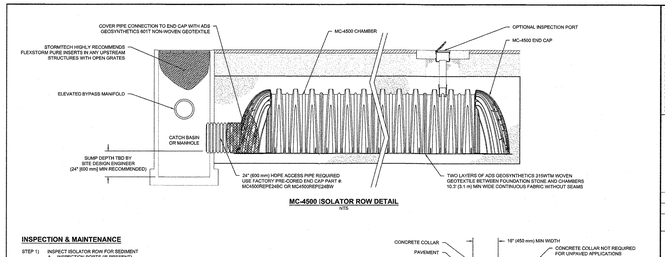

MC-4500 ISOLATOR ROW DETAIL
NTS

INSPECTION & MAINTENANCE

STEP 1) INSPECT ISOLATOR ROW FOR SEDIMENT
A. INSPECTION PORTS (IF PRESENT)
A.1. REMOVE/OPEN LID ON NYLOPLAST INLINE DRAIN
A.2. REMOVE AND CLEAN FLEXSTORM FILTER IF INSTALLED
A.3. USE A DIPSTICK TO MEASURE AND STADIA ROD, MEASURE DEPTH OF SEDIMENT AND RECORD ON MAINTENANCE LOG
A.4. LOWER A CAMERA INTO ISOLATION ROW FOR VISUAL INSPECTION OF SEDIMENT LEVELS (OPTIONAL)
A.5. IF SEDIMENT IS AT, OR ABOVE, 3" (80 mm) PROCEED TO STEP 2. IF NOT, PROCEED TO STEP 3.
B. ALL ISOLATOR ROWS
B.1. REMOVE COVER FROM STRUCTURE AT UPSTREAM END OF ISOLATOR ROW
B.2. USING ALL APPLICABLE CONFINED SPACE ENTRY PROCEDURES, INSERT A CAMERA INTO PIPE
i). MIRRORS ON POLES OR CAMERAS MAY BE USED TO AVOID A CONFINED SPACE ENTRY
ii) FOLLOW OSHA REGULATIONS FOR CONFINED SPACE ENTRY IF ENTERING MANHOLE
B.3. IF SEDIMENT IS AT, OR ABOVE, 3" (80 mm) PROCEED TO STEP 2. IF NOT, PROCEED TO STEP 3

STEP 2) CLEAN OUT ISOLATOR ROW USING THE JETVAC PROCESS
A. A FIXED CULVERT CLEANING NOZZLE WITH REAR FACING SPREAD OF 45" (1.1 m) OR MORE IS PREFERRED
B. APPLY MULTIPLE PASSES OF JETVAC UNTIL BACKFLUSH WATER IS CLEAN
C. VACUUM STRUCTURE SUMP AS REQUIRED

STEP 3) REPLACE ALL COVERS, GRATES, FILTERS, AND LIDS; RECORD OBSERVATIONS AND ACTIONS.

STEP 4) INSPECT AND CLEAN BASINS AND MANHOLES UPSTREAM OF THE STORMTECH SYSTEM.

NOTES

1. INSPECT EVERY 6 MONTHS DURING THE FIRST YEAR OF OPERATION. ADJUST THE INSPECTION INTERVAL BASED ON PREVIOUS OBSERVATIONS OF SEDIMENT ACCUMULATION AND HIGH WATER ELEVATIONS.
2. CONDUCT JETTING AND VACTORING ANNUALLY OR WHEN INSPECTION SHOWS THAT MAINTENANCE IS NECESSARY.

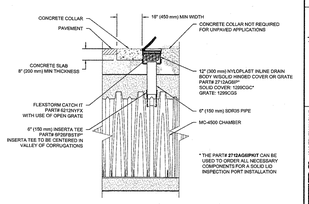

MC-4500 6" (150 mm) INSPECTION PORT DETAIL
NTS

STORMTECH
4640 TRUEMAN BLVD
HILLIARD, OH 43026
(800) 821-5830
www.stormtech.com

ADS
4640 TRUEMAN BLVD
HILLIARD, OH 43026

PRIMROSE RESIDENTIAL - TRACT 37219
RIVERSIDE, CA
DATE: 10/24/18 DRAWN: SDM
PROJECT # ENG2273 CHECKED: JPR

SHEET 4 OF 5

MC-4500 TECHNICAL SPECIFICATION
NTS

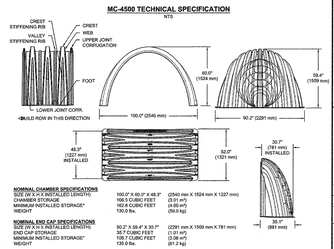

MC-SERIES END CAP INSERTION DETAIL
NTS

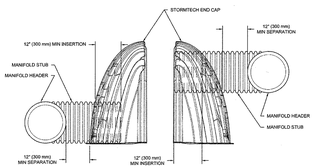

NOTE: MANIFOLD STUB MUST BE LAID HORIZONTAL FOR A PROPER FIT IN END CAP OPENING.

NOMINAL CHAMBER SPECIFICATIONS		
SIZE (W X H X INSTALLED LENGTH)	100.0" X 60.0" X 48.3"	(2540 mm X 1524 mm X 1227 mm)
CHAMBER STORAGE	106.5 CUBIC FEET	(3.01 m³)
MINIMUM INSTALLED STORAGE*	162.6 CUBIC FEET	(4.60 m³)
WEIGHT	130.0 lbs.	(59.0 kg)
NOMINAL END CAP SPECIFICATIONS		
SIZE (W X H X INSTALLED LENGTH)	90.2" X 58.4" X 30.7"	(2291 mm X 1509 mm X 781 mm)
END CAP STORAGE	35.7 CUBIC FEET	(1.01 m³)
MINIMUM INSTALLED STORAGE*	108.7 CUBIC FEET	(3.08 m³)
WEIGHT	135.0 lbs.	(61.2 kg)

*ASSUMES 12" (305 mm) STONE ABOVE, 9" (229 mm) STONE FOUNDATION AND BETWEEN CHAMBERS, 12" (305 mm) STONE PERIMETER IN FRONT OF END CAPS AND 40% STONE POROSITY.

STUBS AT BOTTOM OF END CAP FOR PART NUMBERS ENDING WITH "B"
STUBS AT TOP OF END CAP FOR PART NUMBERS ENDING WITH "T"
END CAPS WITH A WELDED CROWN PLATE END WITH "W"
END CAPS WITH A PREFABRICATED INSELBED STUB END WITH "IN"

PART #	STUB	B	C
MC4500IPE24BT	6" (150 mm)	42.54" (1.081 m)	---
MC4500IPE24BB			0.88" (22 mm)
MC4500IPE24BW	8" (200 mm)	40.50" (1.029 m)	---
MC4500IPE24BN			1.07" (26 mm)
MC4500IPE15T	10" (250 mm)	36.37" (975 mm)	---
MC4500IPE15B		---	1.33" (34 mm)
MC4500IPE12T	12" (300 mm)	35.69" (907 mm)	---
MC4500IPE12B		---	1.55" (39 mm)
MC4500IPE15T	15" (375 mm)	32.72" (831 mm)	---
MC4500IPE15B		---	1.70" (43 mm)
MC4500IPE18TC	18" (450 mm)	29.30" (745 mm)	---
MC4500IPE18TW			
MC4500IPE18BC		---	1.83" (50 mm)
MC4500IPE18BW			
MC4500IPE24TC	24" (600 mm)	23.05" (585 mm)	---
MC4500IPE24TW			
MC4500IPE24BC		---	2.28" (57 mm)
MC4500IPE24BW			
MC4500IPE30BC	30" (750 mm)	---	2.95" (75 mm)
MC4500IPE30BW	36" (900 mm)	---	3.20" (83 mm)
MC4500IPE42BC	42" (1050 mm)	---	3.55" (90 mm)

NOTE: ALL DIMENSIONS ARE NOMINAL

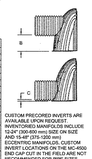

CUSTOM PRECORED INVERTS ARE AVAILABLE UPON REQUEST. INVENTORIED MANIFOLDS INCLUDE 10-24" (300-600 mm) SIZE ON SIZE AND 15-48" (375-1200 mm) ECCENTRIC MANIFOLDS. CUSTOM CORED END CAPS MAY ALSO BE USED. END CAP CUT IN THE FIELD ARE NOT RECOMMENDED FOR PIPE SIZES GREATER THAN 12" (250 mm). THE INVERT LOCATION IN COLUMN 'B' IS THE LOWEST POSSIBLE FOR THE PIPE SIZE.

STORMTECH
4640 TRUEMAN BLVD
HILLIARD, OH 43026
(800) 821-5830
www.stormtech.com

ADS
4640 TRUEMAN BLVD
HILLIARD, OH 43026

PRIMROSE RESIDENTIAL - TRACT 37219
RIVERSIDE, CA
DATE: 10/24/18 DRAWN: SDM
PROJECT # ENG2273 CHECKED: JPR

SHEET 5 OF 5

WDID NO. 833C383218

UNDERGROUND SERVICE ALERT
IMPORTANT NOTICE
Section 4216/4217 of the Government Code requires a Dig Alert Identification Number to be issued before a "Permit to Excavate" will be valid. For your Dig Alert I.D. Number call
CALL TOLL FREE
48 HOURS BEFORE YOU DIG
1-800-227-2600
TWO WORKING DAYS BEFORE YOU WORK

BENCHMARK
DESIGNATION: NGS DX2781 (ALSO RIV. CO. BM 0-38)
DESCRIPTION: AT ARLINGTON, RIVERSIDE COUNTY, AT THE INTERSECTION OF MAGNOLIA AND ROOSEVELT STREETS AT THE ARLINGTON BRANCH OF THE RIVERSIDE PUBLIC LIBRARY, ON THE EAST SIDE OF THE MAIN ENTRANCE, AND ABOUT 1 FOOT ABOVE THE GROUND. A STANDARD DISK, STAMPED 0 38 1924.
ELEVATION: (NAVD88) 790.82 FEET

CITY OF RIVERSIDE
PUBLIC UTILITIES DEPARTMENT
WATER DIVISION
APPROVED BY: 2/12/19 DATE
VOID ONE YEAR FROM THIS DATE

Michael Baker
INTERNATIONAL
3536 CONCOURS ST., SUITE 100
ONTARIO, CA 91764

ENGINEER IN RESPONSIBLE CHARGE
MAURICIO M. IACUELLI
R.C.E. No. 63249 EXPIRES 6/30/20
DATE 02/07/2019

REGISTERED PROFESSIONAL ENGINEER
MAURICIO M. IACUELLI
No. 63249
CIVIL
STATE OF CALIFORNIA

MARK	REVISIONS	APPR.	DATE

DESIGNED BY WS DRAWN BY WS CHECKED BY MMI

CITY OF RIVERSIDE, CALIFORNIA
PUBLIC WORKS DEPARTMENT

APPROVED BY	BY	DATE
PRINCIPAL ENGINEER		2/26/19
ENGINEERING MANAGER		2/26/19

APPROVED BY
CITY ENGINEER
DATE 2-28-19

PRIMROSE RESIDENTIAL - TRACT 37219
PRIVATE STORM DRAIN PLANS
DETAILS SHEET
PRIMROSE AVENUE, RIVERSIDE
HORIZONTAL SCALE: PER PLAN VERTICAL SCALE: PER PLAN

PW18-0520
D-900
SHEET 11 OF 11

\\ONTACAIFS1\HROOT\PDATA\166009\CADD\LAND\DLV\IMPROVE\SD\166009-08-SD.DWG ADACHI, CHAD 2/6/2019 12:23 PM