RIVERSIDE CITY OF RIVERSIDE CALIFORNIA

PUBLIC WORKS DEPARTMENT

MADISON STREET LANDSCAPE IMPROVEMENTS

LINCOLN AVENUE TO EVANS STREET

CONSTRUCTION LEGEND

CENTER LINE	——— ℄ ———	TOP OF SLOPE	
RIGHT-OF-WAY	——— R/W ———	TOE OF SLOPE	
SUBDIVISION LOT LINE	——— PL ———	DIRECTION OF FLOW	———

SHEET INDEX

SHEET 1	COVER SHEET
SHEETS 2-4	IRRIGATION PLANS
SHEET 5-7	PLANTING PLANS

GENERAL CONSTRUCTION NOTES

1. EXISTING UTILITIES SHOWN ON THIS PLAN ARE PLOTTED FROM UTILITY RECORDS. THE CONTRACTOR IS REQUIRED TO TAKE DUE PRECAUTIONARY MEASURES TO LOCATE AND PROTECT ALL UTILITIES WHETHER OR NOT SHOWN ON THIS PLAN. IF THE COVER OF A UTILITY IS KNOWN, IT IS SHOWN IN THE PROFILE. UTILITIES SHOWN IN THE PROFILE AS —— ? —— INDICATES THAT THE COVER IS UNKNOWN, BUT THE UTILITY IS NOT EXPECTED TO CONFLICT WITH THE PROPOSED IMPROVEMENTS.
2. PRIME CONTRACTORS BIDDING THIS WORK SHALL HAVE A CLASS "C-27" LICENSE.
3. CONSTRUCTION SHALL BE IN ACCORDANCE WITH THE CITY OF RIVERSIDE STANDARD DWGS AND STANDARD SPECIFICATIONS FOR PUBLIC WORKS CONSTRUCTION, 1997 EDITION.

GENERAL NOTES FOR PUBLIC LANDSCAPES

1. All related work shall conform to the City of Riverside Park and Recreation Department Standards and Specifications for Planting and Irrigation work. (Specification Sections 02441 and 02480).
2. When calling for inspections, contact the Park Projects Inspector a minimum of 48 hours in advance at (909) 715-3469 to schedule an inspection. A Field Notice will be issued as written approval for each stage of inspection. A verbal approval will not be acceptable. Inspections are required per the specifications, and include but are not necessarily limited to the following:
   a. After completion of rough grading of the project when all utility services and sewer laterals have been marked, but prior to initiating any tree relocation or landscape work within the public right of way;
   b. At time of installation of irrigation sleeves and constant pressure mainlines, but prior to backfill of trenches for same (Note: mainlines must be pressure tested in the presence of the Park Projects Inspector);
   c. At time of installation of irrigation valves, laterals and heads;
   d. For spotting of all trees prior to digging plant pits;
   e. While digging plant pits and planting/relocating trees;
   f. After planting and all other indicated or specified work has been completed, for start of maintenance;
   g. At substantial completion of the project for City's acceptance to start the required maintenance period;
   h. At the end of the Maintenance Period, the Contractor shall call the Park Projects Inspector for a final acceptance inspection in order to be released from maintenance. Developers bonds will not be released until after receipt of written notification from the City that the project has passed final inspection and the Park and Recreation Department is assuming maintenance responsibilities.
3. The Contractor shall be responsible to acceptably maintain all plantings for a period of 90 Days **after substantial completion acceptance of the project by the Parks and Recreation Department.**
4. All landscape areas to be publicly maintained shall be automatically irrigated.

*NOTE: In the interest of public safety and maintenance, the Park Projects Inspector shall have the authority to revise the tree quantities and locations shown on approved plans based upon field conditions found at the time of installation of the trees.

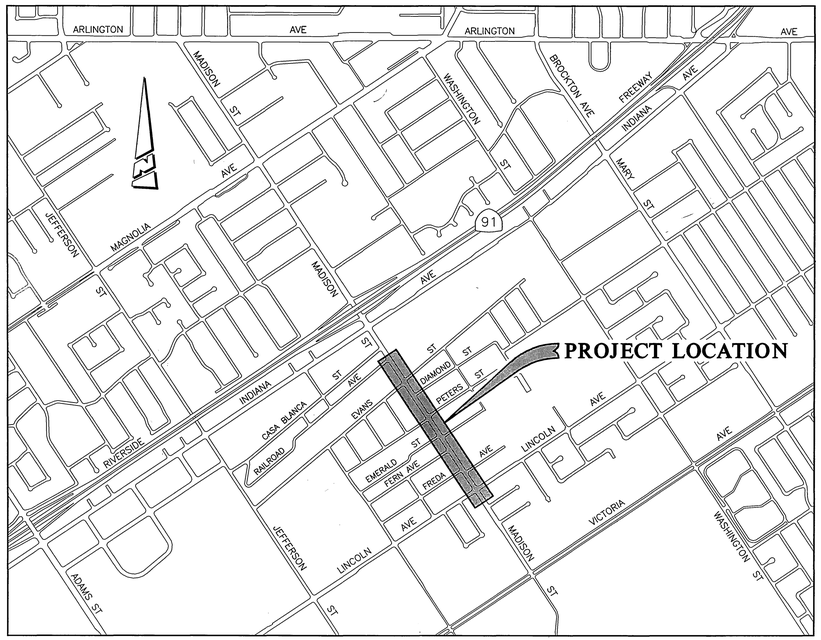

PROJECT LOCATION PLAN

0 KM. 0.25 KM 0.5 KM. 1 KM. 1.5 KM.

0' 500' 1,000' 2,000' 3,000' 4,000' 5,000' 6,000'

SCALE: 1" = 1,000'

EXISTING UNDERGROUND & TOPOGRAPHY LEGEND

EXISTING UNDERGROUND UTILITIES:

SANITARY SEWER	8"S	TELEPHONE CONDUIT	T
WATER LINE	6"W	ELECTRICAL CONDUIT	E
STORM DRAIN	24"SD	ELECTROLIER LIGHTING CONDUIT	ELC
GAS LINE	3"G	TRAFFIC SIGNAL	SIG
ABANDONED UTILITY	6"G(ABAN'D.)	FIRE ALARM	F

EXISTING TOPOGRAPHY:

BLOCK WALL
BOARD FENCE
WIRE FENCE
CHAIN LINK FENCE
TOP OF SLOPE
TOE OF SLOPE
DIRECTION OF FLOW

SANITARY SEWER M.H.
SANITARY SEWER CLEANOUT
STORM DRAIN M.H.
IRRIGATION WEIR
WATER M.H.
GAS M.H.
ELECTRIC M.H.
TELEPHONE M.H.
WATER METER
FIRE HYDRANT
SPRINKLER HEAD
VALVE
AIR VALVE
AIR VENT
BUS STOP SIGN
BLOW-OFF VALVE
IRRIGATION STAND PIPE
POLE & GUY ANCHOR
POWER POLE
TELEPHONE POLE
TELEPHONE RISER
JOINT USE POLE
PULL BOX
TRAFFIC SIGN
PARKING METER
FIRE ALARM BOX
STREET NAME SIGN
GAS METER
MAIL BOX
FAUCET
WALK-DON'T WALK PEDESTRIAN SIGNAL
ELECTROLYSIS TEST STATION
WHEEL STOP
A.C. BERM
CONCRETE
ASPHALT
BUILDING
EDGE OF PAVEMENT
PEDESTRIAN PUSH BUTTON
RAILROAD TRACKS
RAILROAD SIGN
RAILROAD SIGNAL
TRAFFIC SIGNAL
TRAFFIC SIGNAL ON MAST ARM
TRAFFIC SIGNAL CONTROLLER
TRAFFIC SIGNAL PRESSURE DETECTOR
TRAFFIC SIGNAL LOOP DETECTOR
STREET LIGHT & TRAFFIC SIGNAL ON MAST ARM
STREET LIGHT (UPRIGHT)
STREET LIGHT ON MAST ARM
STEEL POST
WOOD POST

SPECIFIC CONSTRUCTION NOTES

NUMBERS ABOVE 100 IN A HEXAGON ON THE PLAN REFER TO THE RESPECTIVE STANDARD DRAWING AND SHALL BE CONSTRUCTED ACCORDINGLY. UNLESS MODIFICATIONS ARE NOTED ON THE PLAN OR COVER SHEET. ANY NUMBER SHOWN BELOW THE STANDARD DRAWING NUMBER INDICATES THE SPECIFIC ALTERNATE TO BE CONSTRUCTED.

1 — CONNECT TO EXISTING TAIL PIPE STUB-OUT PER IRRIGATION DETAIL NO. 4011.

2 — CONNECT TO EXISTING ELECTRIC SERVICE BOX PER IRRIGATION DETAIL NO. 4060.

R/1 — REMOVE EXISTING TREE. CLASS I - 6"-18" DIA.

A/4 — A: INDICATES DETAIL; 4: INDICATES SHEET NO.

IMPORTANT NOTICE
Section 4216/4217 of the Government Code requires a Dig Alert Identification Number to be issued before a "Permit to Excavate" will be valid. For your Dig Alert I.D. Number call
CALL TOLL FREE
48 HOURS BEFORE YOU DIG
UNDERGROUND SERVICE ALERT
1-800-227-2600

ENGINEER IN RESPONSIBLE CHARGE
Ronald C. Mueller
RONALD C. MUELLER
R.C.E. No. 29510 expires 3/31/03
DATE 8-6-99

REGISTERED PROFESSIONAL ENGINEER RONALD C. MUELLER No. 29510 Exp. 3-31-03 CIVIL STATE OF CALIFORNIA

MARK	REVISIONS	APPR.	DATE

DESIGNED BY R.G. FANN DRAWN BY R.G. FANN CHECKED BY RCM

CITY OF RIVERSIDE, CALIFORNIA
PUBLIC WORKS DEPARTMENT

APPROVED BY	BY	DATE
ENGINEERING MANAGER		8/9/99
PRINCIPAL ENGINEER		8/16/99
STREET SERVICES	—	—
SURVEYOR	—	—
TRAFFIC DIVISION	—	—
PARKS DEPARTMENT		8/18/99

APPROVED BY R. McGrath
PUBLIC WORKS DIRECTOR
DATE 8-17-99

MADISON STREET
LANDSCAPE IMPROVEMENTS
LINCOLN AVE. TO EVANS ST.

ACCT. NO. 472-528120-440446-90162

R-3529

SHEET 1 OF 7

PC-4040-M2

INDEXED 11-29-2000 LH

CONSTRUCTION NOTES

1. CONNECT TO EXISTING TAIL PIPE STUB-OUT PER IRRIGATION DETAIL NO. 4011.
2. CONNECT TO EXISTING ELECTRIC SERVICE BOX PER IRRIGATION DETAIL NO. 4060.

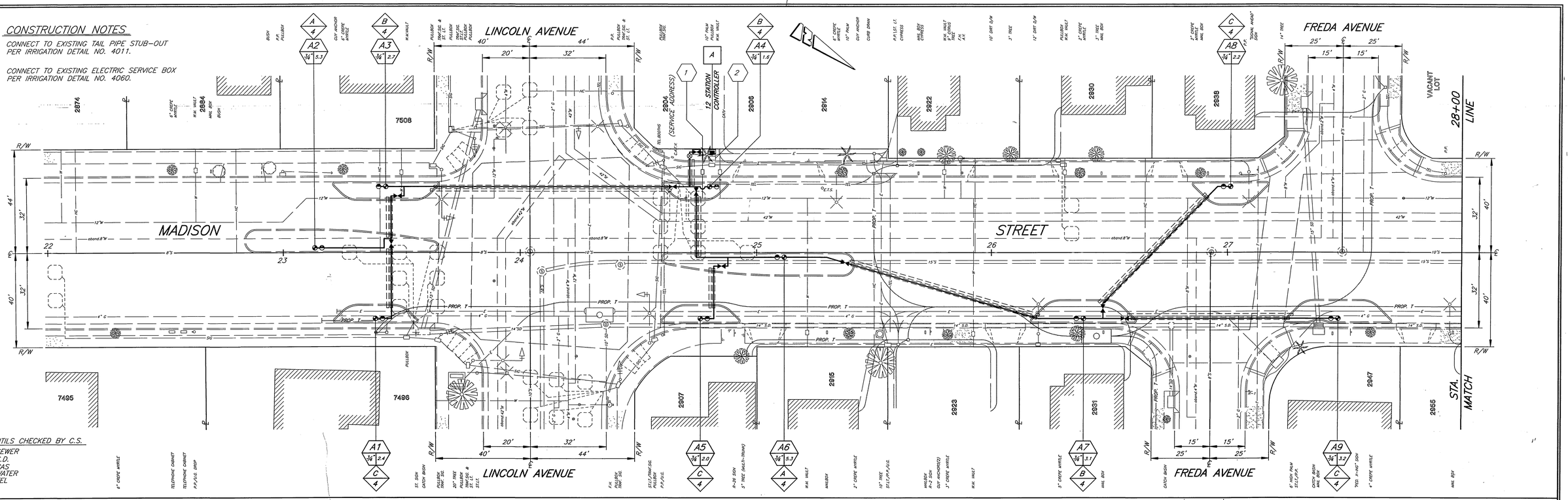

UTILS CHECKED BY C.S.
SEWER
S.D.
GAS
WATER
TEL

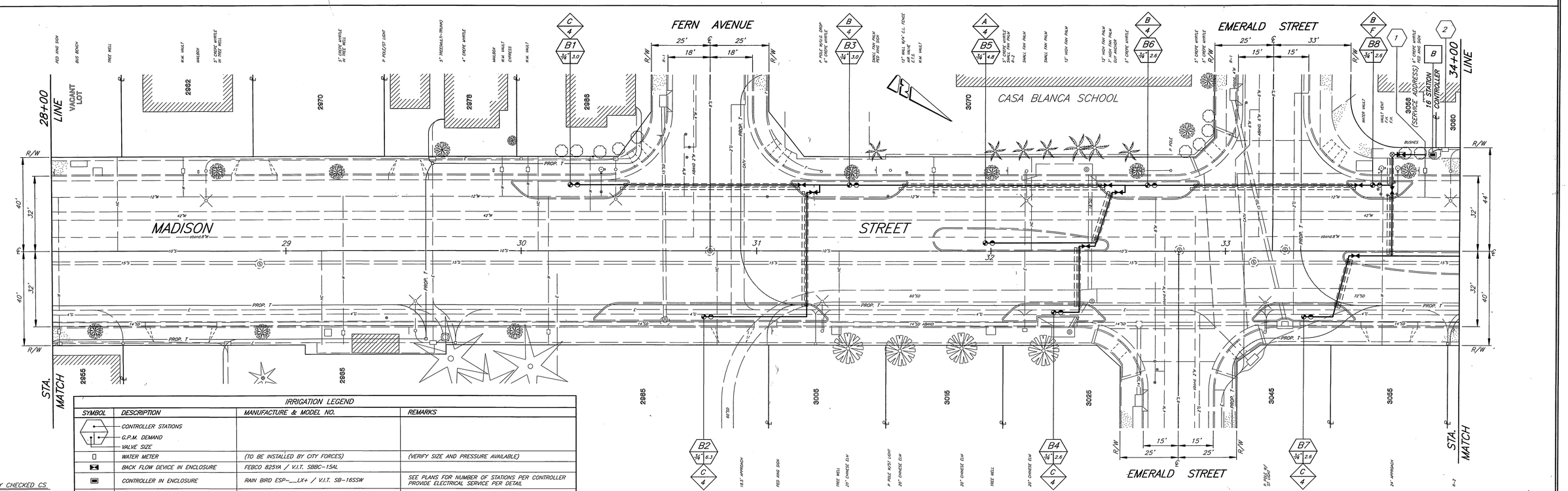

UTILITY CHECKED CS
SEWER
STORM DRAIN
GAS
WATER
TEL

IRRIGATION LEGEND

SYMBOL	DESCRIPTION	MANUFACTURE & MODEL NO.	REMARKS
	CONTROLLER STATIONS G.P.M. DEMAND VALVE SIZE		
	WATER METER	(TO BE INSTALLED BY CITY FORCES)	(VERIFY SIZE AND PRESSURE AVAILABLE)
	BACK FLOW DEVICE IN ENCLOSURE	FEBCO 825YA / V.I.T. SBBC-15AL	
	CONTROLLER IN ENCLOSURE	RAIN BIRD ESP-___LX+ / V.I.T. SB-16SSW	SEE PLANS FOR NUMBER OF STATIONS PER CONTROLLER PROVIDE ELECTRICAL SERVICE PER DETAIL
	MASTER CONTROL VALVE	GRISWOLD SERIES 2000 1-1/2" DIA.	INSTALL VALVE IN THE OPTIONAL "ANGLED" CONFIGURATION IN RECTANGULAR CONCRETE VALVE BOX
	REMOTE CONTROL VALVE ASSEMBLE (INCLUDES DISC FILTER & PRESSURE REGULATOR VALVE)	TORO 254-06-03, 3/4" TORO 730-03 WYE STRAINER NETAFIM PRV075HF20	IN RECTANGULAR PLASTIC VALVE BOX
	QUICK COUPLER VALVE	RAIN BIRD 44ORC 1"	IN ROUND CONCRETE VALVE BOX
	ISOLATION VALVE	WATTS 6800 SERIES BALL VALVE WITH PVC UNIONS	IN ROUND CONCRETE VALVE BOX
	CONSTANT PRESSURE MAIN LINE	PER SPECIAL PROVISIONS	1-1/2" SCHEDULE 40 PVC
	EXISTING 4" PVC SLEEVE		

ENGINEER IN RESPONSIBLE CHARGE
Ronald C. Mueller
RONALD C. MUELLER
R.C.E. No. 29510 expires 3/31/03
DATE 8-6-99

REGISTERED PROFESSIONAL ENGINEER RONALD C. MUELLER No. 29510 Exp. 3-31-03 CIVIL STATE OF CALIFORNIA

MARK	REVISIONS	APPR.	DATE

DESIGNED BY R.G. FANN DRAWN BY R.G. FANN CHECKED BY RCM

CITY OF RIVERSIDE, CALIFORNIA
PUBLIC WORKS DEPARTMENT

APPROVED BY	BY	DATE
ENGINEERING MANAGER		8/16/99
PRINCIPAL ENGINEER		8/16/99
STREET SERVICES	—	—
SURVEYOR	—	—
TRAFFIC DIVISION	—	—
PARKS DEPARTMENT		8/16/99

APPROVED BY R. McGrath
PUBLIC WORKS DIRECTOR
DATE 8-17-99

MADISON STREET
LANDSCAPE IMPROVEMENTS
LINCOLN AVE. TO EVANS ST.

IRRIGATION PLANS

HORIZ. SCALE: 1" = 20'

ACCT. NO. 472-528120-440446-90162

R-3529

SHEET 2 OF 7

PC-4040-M2

INDEXED 11-29-2000 LH

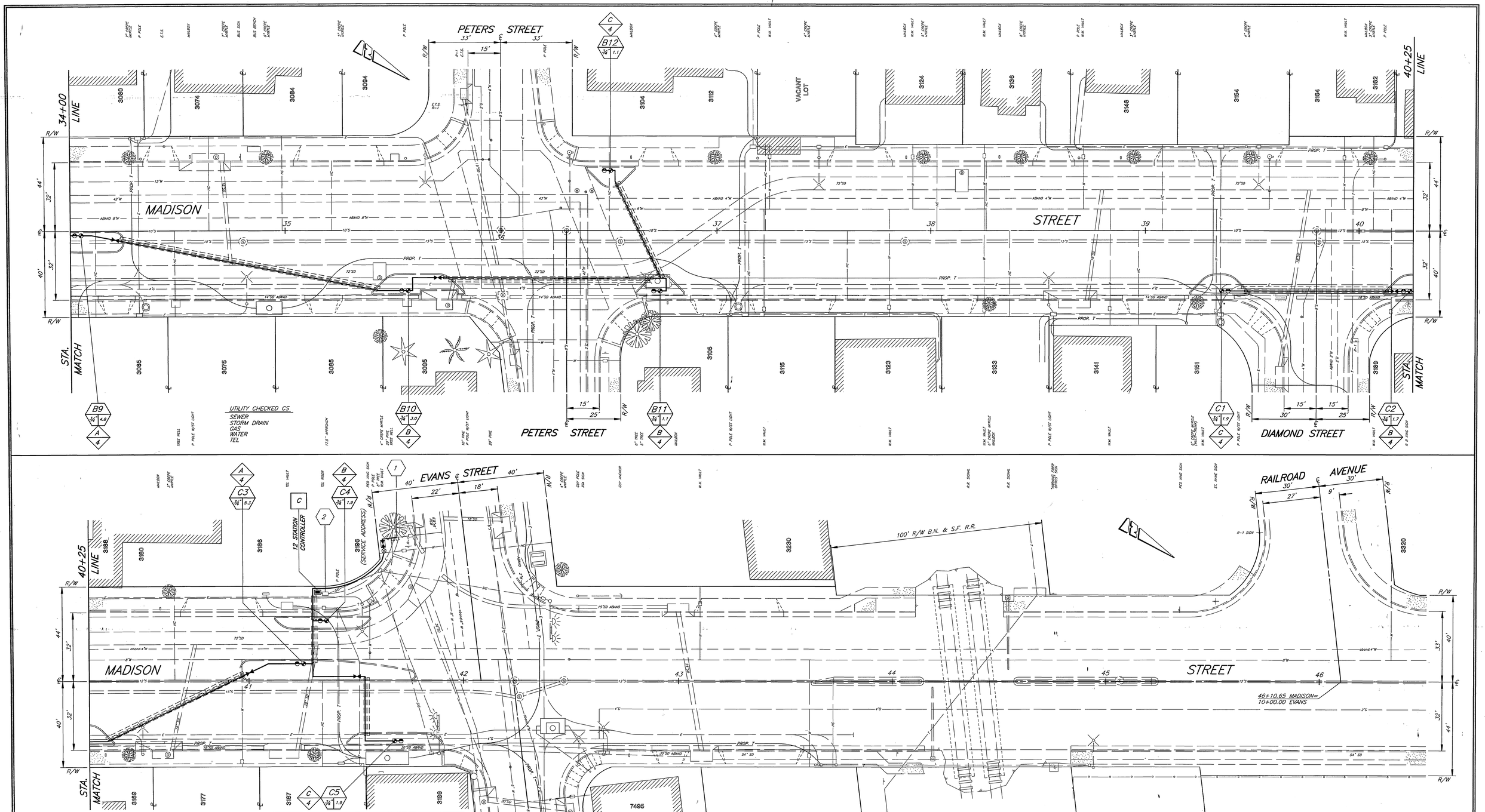

IRRIGATION LEGEND

SYMBOL	DESCRIPTION	MANUFACTURE & MODEL NO.	REMARKS
	CONTROLLER STATIONS G.P.M. DEMAND VALVE SIZE		
	WATER METER	(TO BE INSTALLED BY CITY FORCES)	(VERIFY SIZE AND PRESSURE AVAILABLE)
	BACK FLOW DEVICE IN ENCLOSURE	FEBCO 825YA / V.I.T. SBBC-15AL	
	CONTROLLER IN ENCLOSURE	RAIN BIRD ESP-___LX+ / V.I.T. SB-16SSW	SEE PLANS FOR NUMBER OF STATIONS PER CONTROLLER PROVIDE ELECTRICAL SERVICE PER DETAIL
	MASTER CONTROL VALVE	GRISWOLD SERIES 2000 1-1/2" DIA.	INSTALL VALVE IN THE OPTIONAL "ANGLED" CONFIGURATION IN RECTANGULAR CONCRETE VALVE BOX
	REMOTE CONTROL VALVE ASSEMBLE (INCLUDES DISC FILTER & PRESSURE REGULATOR VALVE)	TORO 254-06-03, 3/4" TORO 730-03 WYE STRAINER NETAFIM PRV075HF20	IN RECTANGULAR PLASTIC VALVE BOX
	QUICK COUPLER VALVE	RAIN BIRD 44DLRC 1"	IN ROUND CONCRETE VALVE BOX
	ISOLATION VALVE	WATTS 6800 SERIES BALL VALVE WITH PVC UNIONS	IN ROUND CONCRETE VALVE BOX
	CONSTANT PRESSURE MAIN LINE	PER SPECIAL PROVISIONS	1-1/2" SCHEDULE 40 PVC
	EXISTING 4" PVC SLEEVE		

UTILITY CHECKED CS
SEWER
STORM DRAIN
GAS
WATER
TEL

CONSTRUCTION NOTES

1. CONNECT TO EXISTING TAIL PIPE STUB-OUT PER IRRIGATION DETAIL NO. 4011.
2. CONNECT TO EXISTING ELECTRIC SERVICE BOX PER IRRIGATION DETAIL NO. 4060.

ENGINEER IN RESPONSIBLE CHARGE
Ronald C. Mueller
RONALD C. MUELLER
R.C.E. No. 29510 expires 3/31/03
DATE 8-6-99

REGISTERED PROFESSIONAL ENGINEER
RONALD C. MUELLER
No. 29510
Exp. 3-31-03
CIVIL
STATE OF CALIFORNIA

MARK	REVISIONS	APPR.	DATE

DESIGNED BY R.G. FANN DRAWN BY R.G. FANN CHECKED BY RCM

CITY OF RIVERSIDE, CALIFORNIA
PUBLIC WORKS DEPARTMENT

APPROVED BY	BY	DATE
ENGINEERING MANAGER		8/17/99
PRINCIPAL ENGINEER		8/16/99
STREET SERVICES		
SURVEYOR		
TRAFFIC DIVISION		
PARKS DEPARTMENT		8/16/99

APPROVED BY R. M. Beach
PUBLIC WORKS DIRECTOR
DATE 8-17-99

MADISON STREET
LANDSCAPE. IMPROVEMENTS
LINCOLN AVE. TO EVANS ST.
IRRIGATION PLANS
HORIZ. SCALE: 1" = 20'

ACCT. NO. 472-528120-440446-90162
R-3529
SHEET 3 OF 7

PC-4040-M2

INDEXED 11-29-2000 LH

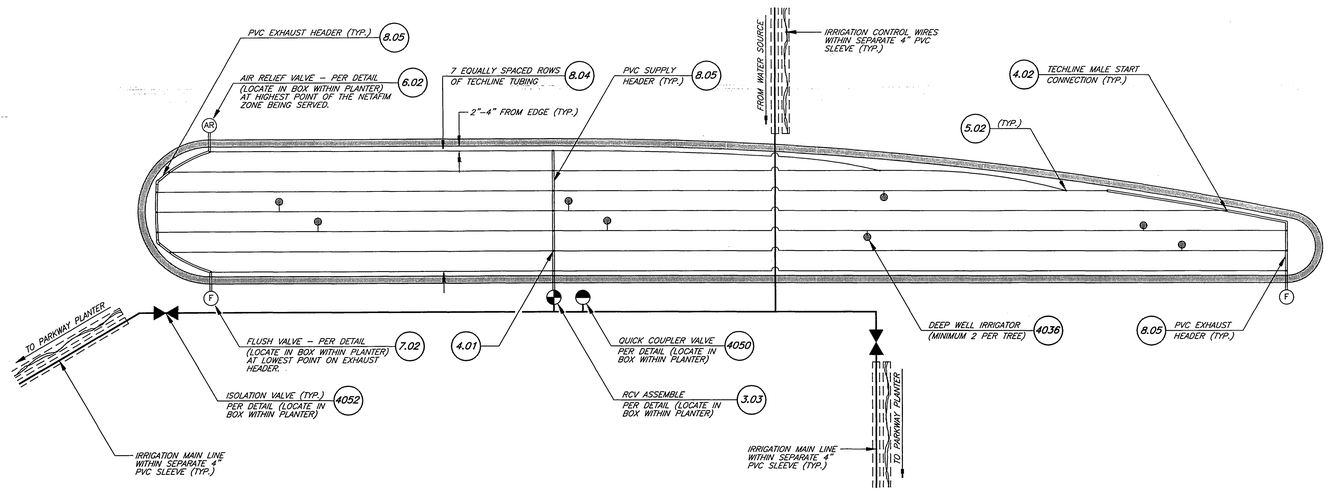

A/4 MEDIAN IRRIGATION DETAIL
SCALE: 1"=5'

IRRIGATION LEGEND			
SYMBOL	DESCRIPTION	MANUFACTURE & MODEL NO.	REMARKS
	IRRIGATION DETAIL NUMBER		IRRIGATION DETAILS INCLUDED WITH SPECIAL PROVISIONS
	REMOTE CONTROL VALVE ASSEMBLE (INCLUDES DISC FILTER & PRESSURE) REGULATOR VALVE)	TORO 254–06–03, 3/4" TORO 730–03 WYE STRAINER NETAFIM PRV075HF20	IN RECTANGULAR PLASTIC VALVE BOX
	QUICK COUPLER VALVE	RAIN BIRD 44DLRC 1"	IN ROUND CONCRETE VALVE BOX
	ISOLATION VALVE	WATTS 6800 SERIES BALL VALVE WITH PVC UNIONS	IN ROUND CONCRETE VALVE BOX
AR	AIR/VACUUM RELIEF VALVE	NETAFIM TLAVRV WITH 1/2" MPT	IN ROUND PLASTIC VALVE BOX
F	FLUSH VALVE	NETAFIM TL050MF V–1 WITH 1/2" MPT	IN ROUND PLASTIC VALVE BOX
	CONSTANT PRESSURE MAIN LINE	PER SPECIAL PROVISIONS	1–1/2" SCHEDULE 40 PVC
	PVC SUPPLY/EXHAUST HEADER	PER SPECIAL PROVISIONS	3/4" CLASS 200 PVC
	TECHLINE DRIP EMITTER LATERAL	PER SPECIAL PROVISIONS	
	EXISTING 4" PVC SLEEVE		
	PVC SCHEDULE 40 SLEEVE	PER SPECIAL PROVISIONS	MATCH EXISTING (4" DIA.)
	IRRIGATION CONTROL WIRE	PER TECHNICAL SPECIFICATIONS SECTION 02442	

GENERAL NOTES:

1. ALL VALVE LOCATIONS SHOWN ARE DIAGRAMMATIC. LOCATE ALL VALVES WITHIN THE PLANTER AREA.
2. TECHLINE LATERAL TUBE SPACING IS BASED ON A "NOMINAL" 18" O.C. SPACING (SEE TECHLINE LATERAL TABLE). 0.92 GPH FLOW AND 18" DRIPPER INTERVAL. PROVIDE 4" OF COVER (2" OF MULCH OVER 2" OF SOIL).
3. PROVIDE ONE SPARE CONTROL WIRE FROM THE CONTROLLER TO EACH PLANTER AREA WITH REMOTE CONTROL VALVES.
4. IRRIGATION SYSTEM LAYOUT FOR ALL OTHER MEDIANS AND PARKWAY PLANTERS TO BE SIMILAR. CONTRACTOR SHALL SUBMIT SHOP DRAWINGS FOR EACH PLANTER.
5. ALL TREES TO BE PLANTED AT LOCATIONS SPOTTED, INSPECTED AND ACCEPTED BY PARKS DEPARTMENT INSPECTOR PRIOR TO INSTALLATION OF IRRIGATION TECHLINES. CONTRACTOR TO CONFIRM LOCATIONS OF ALL UNDERGROUND UTILITIES.

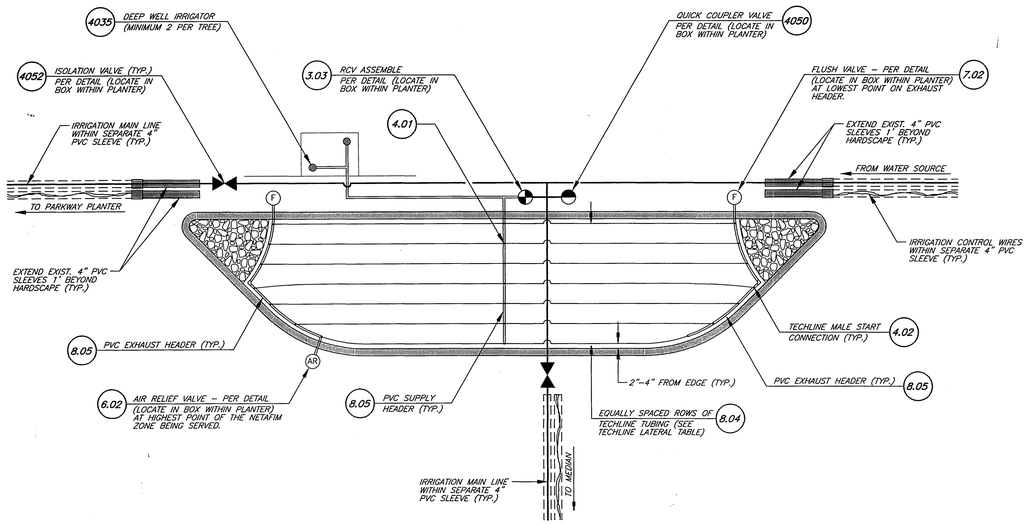

B/4 PARKWAY PLANTER IRRIGATION DETAIL
SCALE: 1"=5'

TECHLINE LATERAL TABLE	
PLANTER WIDTH	ROWS OF TECHLINE TUBING
6'	4
8'	6
10'	7

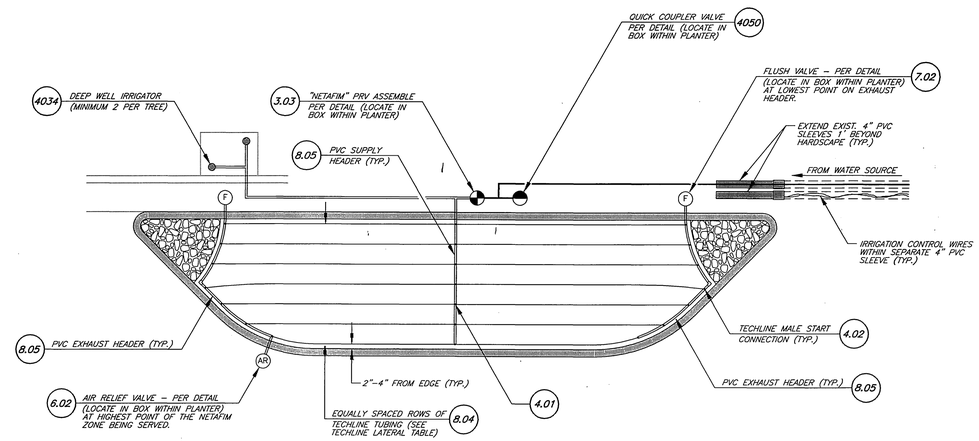

C/4 PARKWAY PLANTER IRRIGATION DETAIL
SCALE: 1"=5'

OPERATIONAL TEST:
CONTRACTOR SHALL PERFORM AN OPERATIONAL TEST OF THE IRRIGATION SYSTEM IN THE PRESENCE OF THE PARKS DEPARTMENT INSPECTOR TO DETERMINE IF THE WATER COVERAGE FOR PLANTING AREAS IS COMPLETE AND ADEQUATE.

ENGINEER IN RESPONSIBLE CHARGE
Ronald C. Mueller
RONALD C. MUELLER
R.C.E. No. 29510 expires 3/31/03
DATE 8-6-99

REGISTERED PROFESSIONAL ENGINEER RONALD C. MUELLER No. 29510 Exp. 3-31-03 CIVIL STATE OF CALIFORNIA

MARK	REVISIONS	APPR.	DATE

DESIGNED BY R.G. FANN DRAWN BY R.G. FANN CHECKED BY RCM

CITY OF RIVERSIDE, CALIFORNIA
PUBLIC WORKS DEPARTMENT

APPROVED BY	BY	DATE
ENGINEERING MANAGER	TPS	8/16/99
PRINICIPAL ENGINEER	RC	8/16/99
STREET SERVICES	—	—
SURVEYOR	—	—
TRAFFIC DIVISION	—	—
PARKS DEPARTMENT	MM	8/16/99

APPROVED BY R. McGrath
PUBLIC WORKS DIRECTOR
DATE 8-17-99

MADISON STREET
LANDSCAPE IMPROVEMENTS
LINCOLN AVE. TO EVANS ST.
IRRIGATION PLANS
HORIZ. SCALE: 1" = 5'

ACCT. NO. 472-528120-440446-90162
R-3529
SHEET 4 OF 7

PC-4040-MP

INDEXED 11-29-2000 LH

CONSTRUCTION NOTES

R/1 REMOVE EXISTING TREE. CLASS I - 6"-18" DIA.

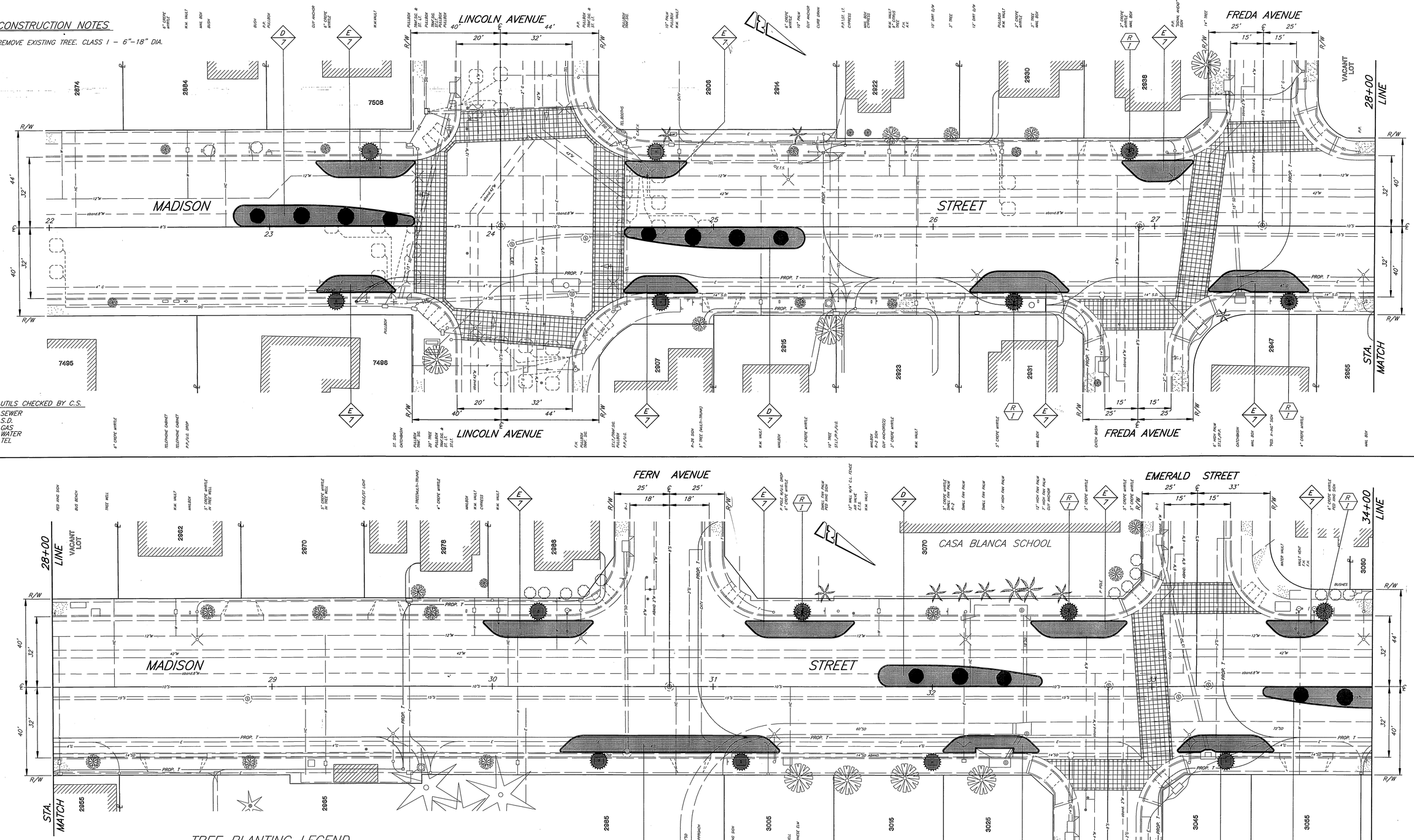

TREE PLANTING LEGEND

ITEM	SYMBOL	BOTANICAL NAME	COMMON NAME	SIZE	COMMENT
TREES					
T-1		CHITALPA TASHKENTENSIS "PINK DAWN"	CHITALPA	24" BOX	SPACING AS SHOWN PER DETAIL
T-2		MAYTENUS BOARIA "GREEN SHOWERS"	MAYTEN	24" BOX	SPACING AS SHOWN PER DETAIL
T-3		QUERCUS VIRGINIANA	SOUTHERN LIVE OAK	24" BOX	ONE TREE PER WELL

ENGINEER IN RESPONSIBLE CHARGE

Ronald C. Mueller

RONALD C. MUELLER
R.C.E. No. 29510 expires 3/31/03

DATE 8-6-99

REGISTERED PROFESSIONAL ENGINEER RONALD C. MUELLER No. 29510 Exp. 3-31-03 CIVIL STATE OF CALIFORNIA

MARK	REVISIONS	APPR.	DATE

DESIGNED BY R.G. FANN DRAWN BY R.G. FANN CHECKED BY RCM

CITY OF RIVERSIDE, CALIFORNIA
PUBLIC WORKS DEPARTMENT

APPROVED BY	JBY	DATE	APPROVED BY
ENGINEERING MANAGER			R. McGrath
PRINCIPAL ENGINEER			PUBLIC WORKS DIRECTOR
STREET SERVICES			
SURVEYOR			
TRAFFIC DIVISION			DATE 8-17-99
PARKS DEPARTMENT			

MADISON STREET LANDSCAPE IMPROVEMENTS LINCOLN AVE. TO EVANS ST.

PLANTING PLANS

HORIZ. SCALE: 1" = 20'

ACCT. NO. 472-528120-440446-90162

R-3529

SHEET 5 OF 7

PC-4040-M2

INDEXED 11-29-2000 GH

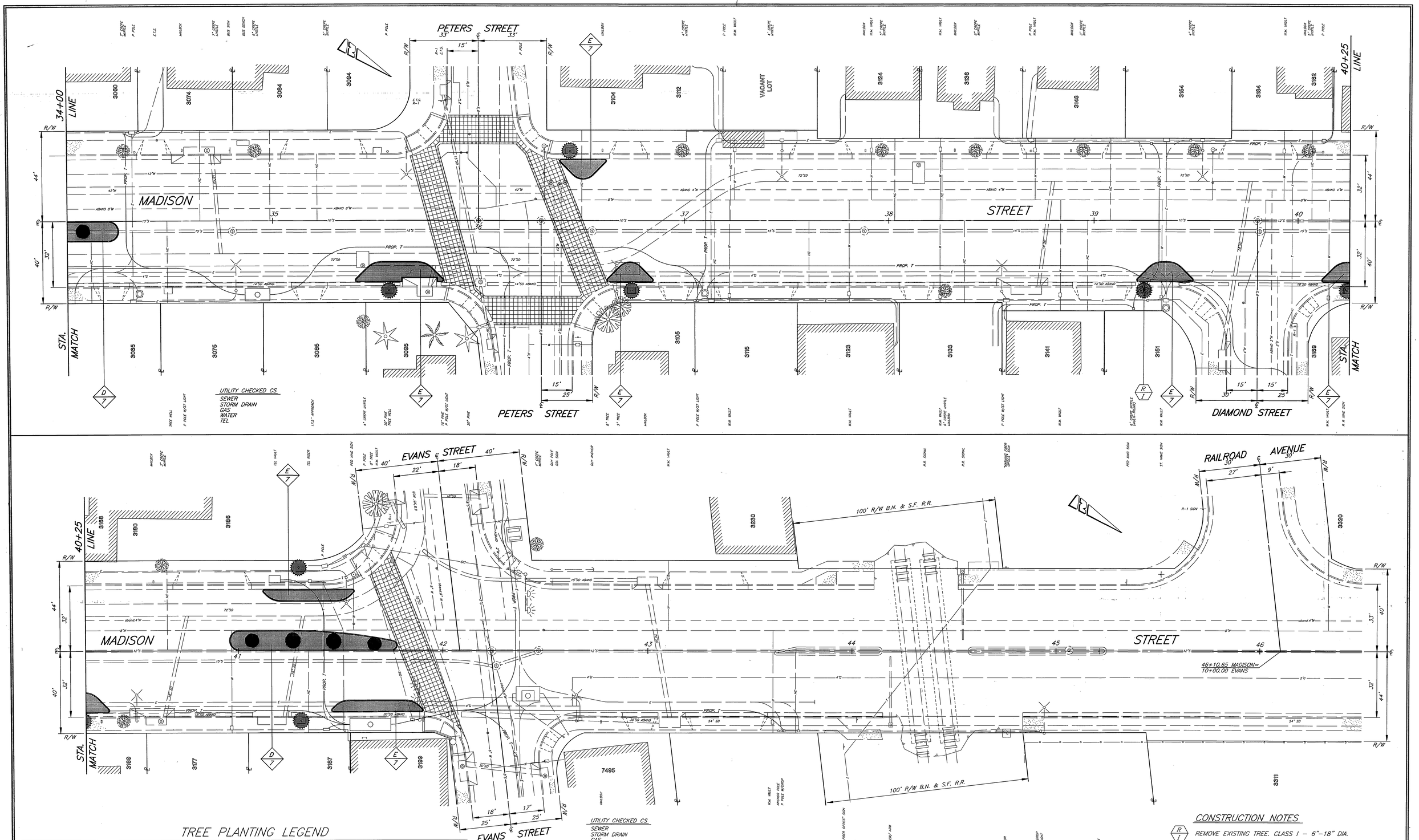

TREE PLANTING LEGEND

ITEM	SYMBOL	BOTANICAL NAME	COMMON NAME	SIZE	COMMENT
TREES					
T-1		CHITALPA TASHKENTENSIS "PINK DAWN"	CHITALPA	24" BOX	SPACING AS SHOWN PER DETAIL
T-2		MAYTENUS BOARIA "GREEN SHOWERS"	MAYTEN	24" BOX	SPACING AS SHOWN PER DETAIL
T-3		QUERCUS VIRGINIANA	SOUTHERN LIVE OAK	24" BOX	ONE TREE PER WELL

CONSTRUCTION NOTES

(R/1) REMOVE EXISTING TREE. CLASS I – 6"–18" DIA.

ENGINEER IN RESPONSIBLE CHARGE

Ronald C. Mueller

RONALD C. MUELLER
R.C.E. No. 29510 expires 3/31/03

DATE 8-6-99

REGISTERED PROFESSIONAL ENGINEER RONALD C. MUELLER No. 29510 Exp. 3-31-03 CIVIL STATE OF CALIFORNIA

MARK	REVISIONS	APPR.	DATE

DESIGNED BY R.G. FANN DRAWN BY R.G. FANN CHECKED BY RCM

CITY OF RIVERSIDE, CALIFORNIA
PUBLIC WORKS DEPARTMENT

APPROVED BY	JBY	DATE
ENGINEERING MANAGER		8/17/99
PRINCIPAL ENGINEER		8/16/99
STREET SERVICES		
SURVEYOR		
TRAFFIC DIVISION		
PARKS DEPARTMENT		8/16/99

APPROVED BY R. McGrath
PUBLIC WORKS DIRECTOR
DATE 8-17-99

MADISON STREET LANDSCAPE IMPROVEMENTS LINCOLN AVE. TO EVANS ST.

PLANTING PLANS

HORIZ. SCALE: 1" = 20'

ACCT. NO. 472-528120-440446-90162

R-3529

SHEET 6 OF 7

PC-4040-M2

INDEXED 11-29-2000 GH

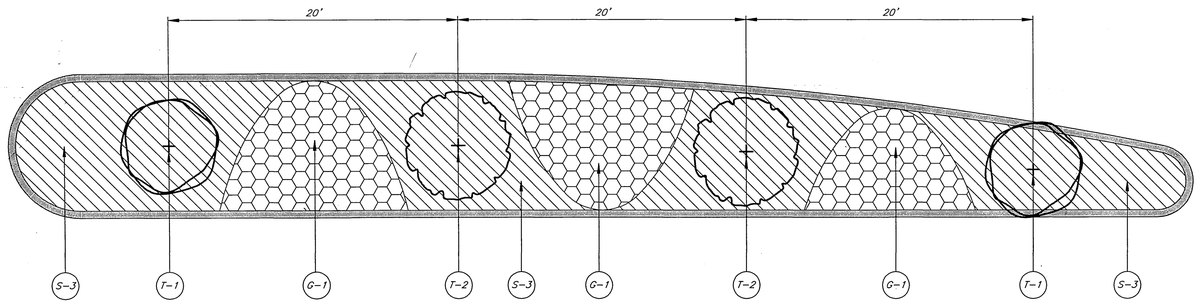

D/7 TYPICAL MEDIAN PLANTING DETAIL
SCALE: 1"=5'

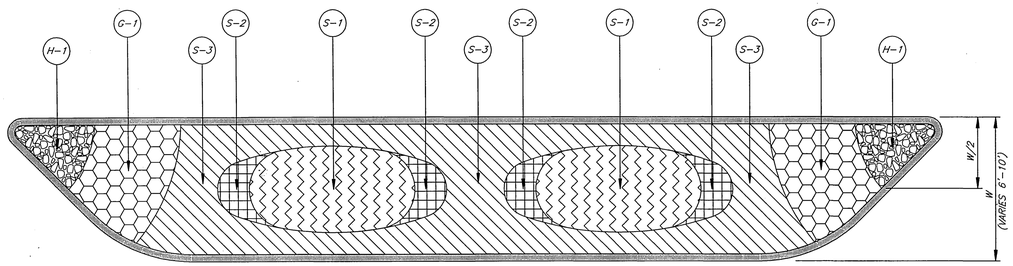

F/7 TYPICAL PARKWAY PLANTING DETAIL
SCALE: 1"=5'

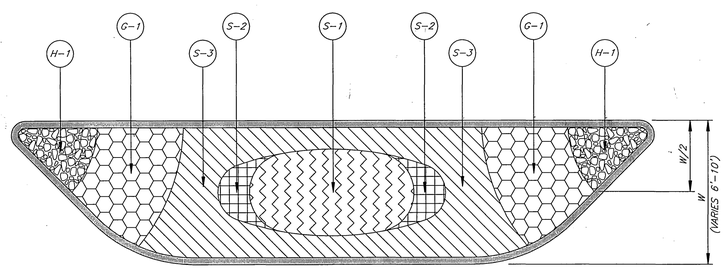

E/7 TYPICAL PARKWAY PLANTING DETAIL
SCALE: 1"=5'

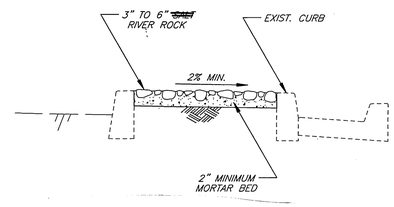

G/7 HARDSCAPE DETAIL
SCALE: 1"=2'

PLANTING NOTES:

1. PLANT DESIGN IS DIAGRAMMATIC AND SHALL NOT TAKE PLACE WHERE UNFORESEEN SITE CONDITIONS PREVENT EXECUTION OF THE DESIGNERS INTENT. WHEN UNEXPECTED SITE CONDITIONS CAUSE UNREASONABLE DEVIATIONS IN THE INTENDED PLANTING SCHEME THE CONTRACTOR SHALL IMMEDIATELY INFORM THE ENGINEER.
2. MAINTENANCE PERIOD SHALL BE 90 DAYS FROM DATE OF ACCEPTANCE. PLANTING SHALL BE GUARANTEED FOR ONE YEAR. MAINTENANCE SHALL INCLUDE BI-WEEKLY WEED AND RODENT ABATEMENT PROCEDURES.
3. REPLACEMENT OF DAMAGED OR DESTROYED ITEMS SHALL TAKE PLACE WITHIN 48 HOURS OF NOTIFICATION BY THE CITY'S REPRESENTATIVE, OR SAID REPLACEMENT ITEMS SHALL BE DEDUCTED FROM THE CONTRACTOR'S FINAL BILLING.
4. REPLACEMENT ITEMS SHALL BE EXACT DUPLICATE OF ORIGINAL WORK OR PLANTS, UNLESS OTHERWISE APPROVED BY THE ENGINEER OR CITY'S REPRESENTATIVE.
5. TREES AND SHRUBS SHALL BE PLANTED AFTER CONCRETE PLACEMENT, BUT NOT BEFORE IRRIGATION COVERAGE HAS BEEN APPROVED.
6. AREAS TO BE PLANTED WITH GROUND COVER SHALL HAVE THE FOLLOWING TILLED INTO THE TOP 6" OF SOIL PER 1,000 SQ. FT.:

   4 CU. YDS. NITROLIZED WOOD SHAVINGS
   20 LBS. 12-12-12 COMMERCIAL FERTILIZER (BEST PRODUCTS OR EQUAL)
   100 LBS. AG. GYPSUM
   10 LBS SOIL SULFUR
   20 LBS. IRON SULFATE

   PRIOR TO PLANTING OF GROUND COVER FLATS, A GRANULAR PRE-EMERGENT, NON-SELECTIVE HERBACIDE SHALL BE APPLIED ACCORDING TO MANUFACTURER'S RECOMMENDATION.
7. ALL AREAS PLANTED WITH SHRUBS OR GROUND COVER TO RECEIVE MINIMUM 2" LAYER OF MULCH.
8. TREE BACKFILL MIX SHALL CONSIST OF THE FOLLOWING PER CU. YD.:

   2/3 YD. SCREENED SITE SOIL
   1/3 YD. NITROLIZED WOOD SHAVINGS
   1 LB. 12-12-12 COMMERCIAL FERTILIZER
   10 LBS. AG GYPSUM
   1 LBS. SOIL SULFUR
   2 LBS. IRON SULFATE
9. IRRIGATION SYSTEM SHALL BE INSTALLED PRIOR TO PLANT MATERIAL.
10. CLEAN-UP SHALL TAKE PLACE ON A DAILY BASIS UNLESS OTHERWISE APPROVED BY THE CITY'S REPRESENTATIVE.
11. CONTACT THE PARK PROJECTS INSPECTOR AT (909) 715-3469 TWO WORKING DAYS (48 HOURS) PRIOR TO INSTALLING ANY PLANT MATERIAL.
12. WATERING BASINS MAY BE REMOVED AFTER THE MAINTENANCE PERIOD.
13. FOR STAKING INFORMATION AS APPLICABLE, REFER TO STAKING DETAIL.
14. FOR GUYING INFORMATION AS APPLICABLE, REFER GUYING DETAIL.
15. FOR SPECIFICATION INFORMATION, REFER TO CITY OF RIVERSIDE PARK AND RECREATION DEPARTMENT STANDARD SPECIFICATIONS, SECTION 02480 PLANTING.
16. PROVIDE FERTILIZER TABLETS AS FOLLOWS:

1 GALLON PLANT	2 TABLETS
5 GALLON PLANT	3 TABLETS
15 GALLON PLANT	5 TABLETS
24" BOX PLANT	2 TABLETS

17. ALL TREES TO BE PLANTED AT LOCATIONS SPOTTED, INSPECTED AND ACCEPTED BY PARKS DEPARTMENT INSPECTOR PRIOR TO INSTALLATION OF IRRIGATION TECHLINES. CONTRACTOR TO CONFIRM LOCATIONS OF ALL UNDERGROUND UTILITIES. ALL TREES TO BE PLANTED WITH 24" DEEP ROOT BARRIERS.

PLANTING LEGEND

ITEM	SYMBOL	BOTANICAL NAME	COMMON NAME	SIZE	COMMENT
TREES					
T-1	+	CHITALPA TASHKENTENSIS "PINK DAWN"	CHITALPA	24" BOX	SPACING AS SHOWN PER DETAIL
T-2	+	MAYTENUS BOARIA "GREEN SHOWERS"	MAYTEN	24" BOX	SPACING AS SHOWN PER DETAIL
SHRUB					
S-1		DIETES BICOLOR	FORTNIGHT LILY	1 GAL.	SPACE @ 18" O.C.
S-2		AGAPANTHUS AFRICANUS	LILY OF THE NILE	1 GAL.	SPACE @ 18" O.C.
S-3		WHEELER'S DWARF	PITTOSPORUM TOBIRA	1 GAL.	SPACE @ 18" O.C.
GROUND COVER					
G-1		RATIBIDA COLUMNFERA	MEXICAN HAT	1 GAL.	SPACE @ 12" O.C.
HARDSCAPE					
H-1			GROUTED RIVER ROCK	3" TO 6"	RIVER ROCK SET INTO A 2" MINIMUM MORTAR BED.

ENGINEER IN RESPONSIBLE CHARGE
Ronald C. Mueller
RONALD C. MUELLER
R.C.E. No. 29510 expires 3/31/03
DATE 8-6-99

REGISTERED PROFESSIONAL ENGINEER RONALD C. MUELLER No. 29510 Exp. 3-31-03 CIVIL STATE OF CALIFORNIA

MARK	REVISIONS	APPR.	DATE

DESIGNED BY R.G. FANN DRAWN BY R.G. FANN CHECKED BY RCM

CITY OF RIVERSIDE, CALIFORNIA
PUBLIC WORKS DEPARTMENT

APPROVED BY	BY	DATE	APPROVED BY
ENGINEERING MANAGER	TTB	8/16/99	R. McGrath
PRINCIPAL ENGINEER	RC	8/16/99	
STREET SERVICES	—	—	PUBLIC WORKS DIRECTOR
SURVEYOR	—	—	
TRAFFIC DIVISION	—	—	
PARKS DEPARTMENT	[illegible]	8/16/99	DATE 8-17-99

MADISON STREET
LANDSCAPE IMPROVEMENTS
LINCOLN AVE. TO EVANS ST.
PLANTING PLAN
HORIZ. SCALE: 1" = 20'

ACCT. NO. 472-528120-440446-90162
R-3529
SHEET 7 OF 7

PC-4040-M2

INDEXED 11-29-2000 LH