TRACT 28828-1
STREET IMPROVEMENT PLANS

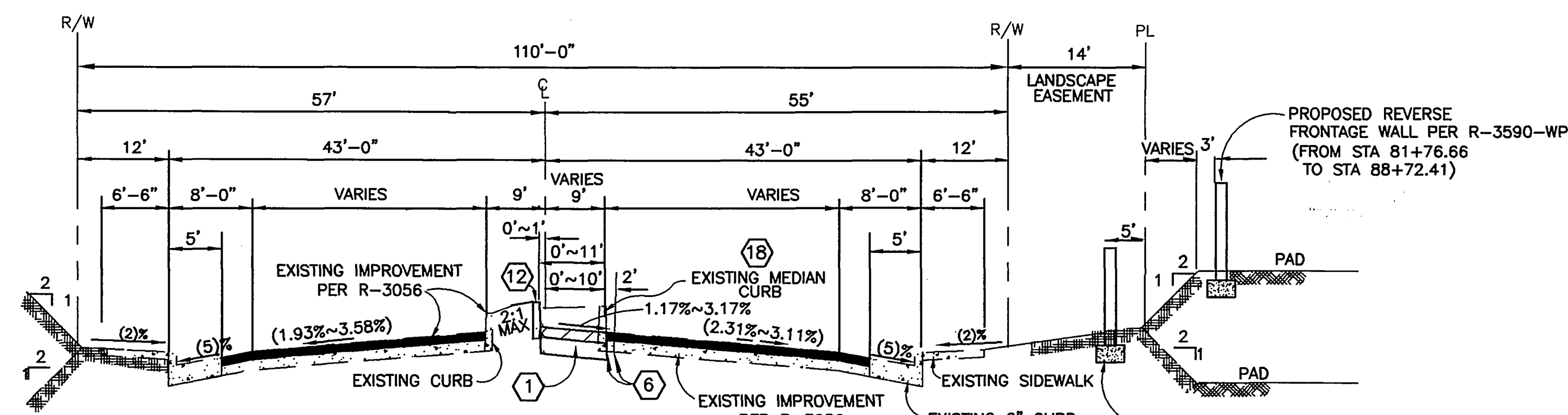

TRAUTWEIN ROAD
FUTURE MEDIAN CONSTRUCTION
N.T.S.
STA 81+14.64 TO STA 83+84.64
CONSTRUCT 4 "A.C. OVER 8 " C.A.B.
PER S.R. * R= 52 T.I.=8.5
* PER STREET IMPROVEMENT PLAN R-3056

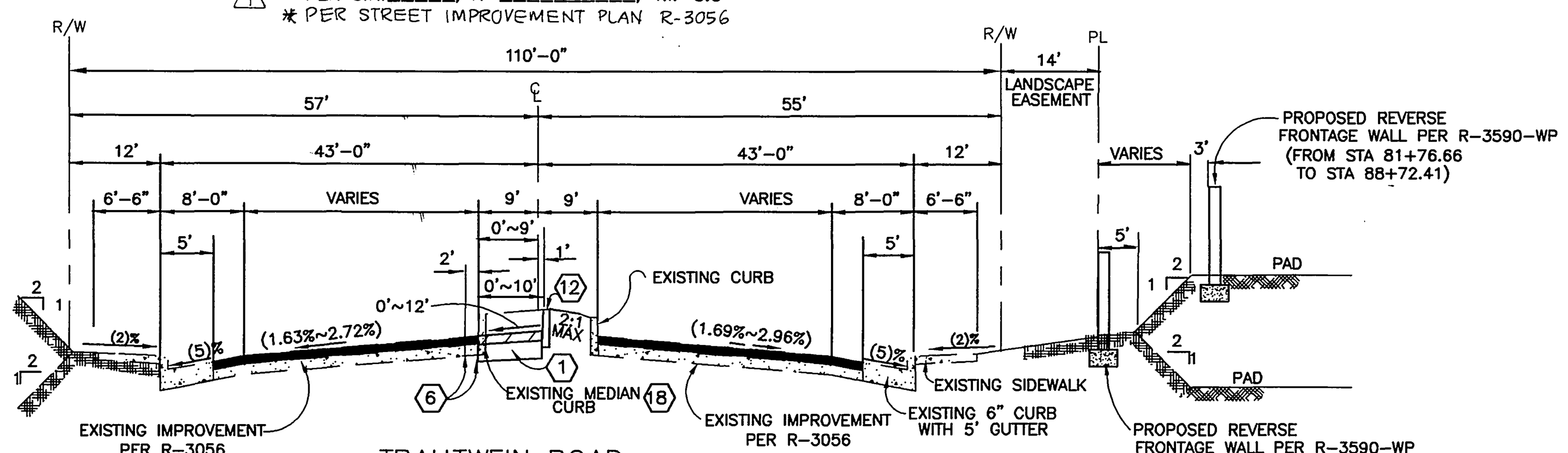

TRAUTWEIN ROAD
FUTURE MEDIAN CONSTRUCTION
N.T.S.
STA 84+52.93 TO STA 87+25.02
CONSTRUCT 4 "A.C. OVER 8 " C.A.B.
PER S.R. * R= 52 T.I.=8.5
* PER STREET IMPROVEMENT PLAN R-3056

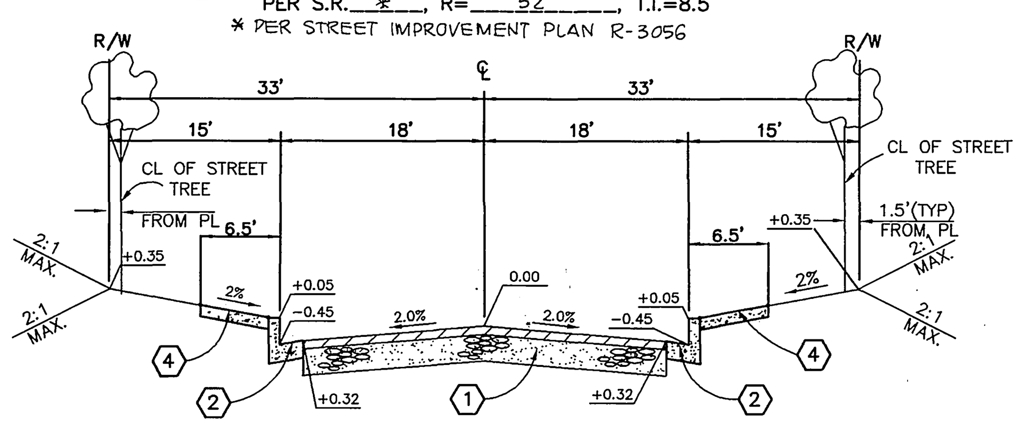

WINDY LANE 66' R/W
TYPICAL SECTION
N.T.S.
CONSTRUCT 0.25 "A.C. OVER 0.50 ' C.A.B.
PER S.R. 1560 R= 25 T.I.= 5.0

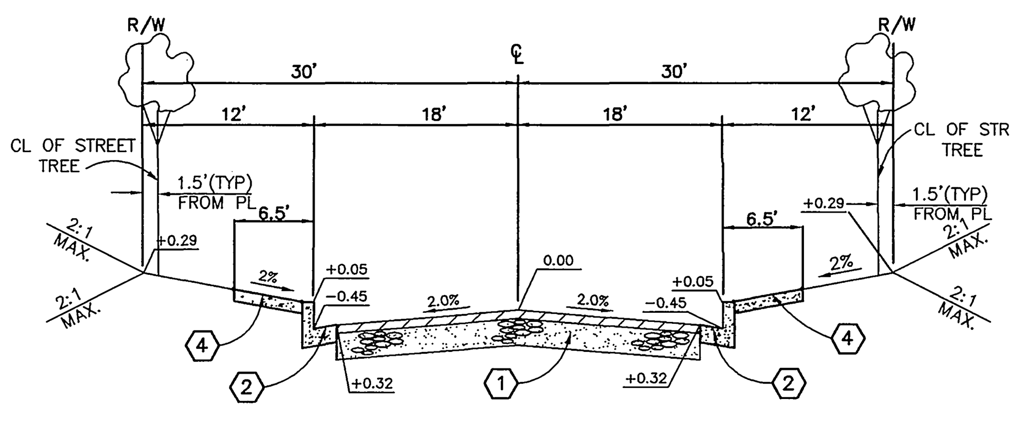

YOKO LANE 60' R/W
TYPICAL SECTION
N.T.S.
CONSTRUCT 0.25 "A.C. OVER 0.50 ' C.A.B.
PER S.R. 1560 R= 26 T.I.= 5.0

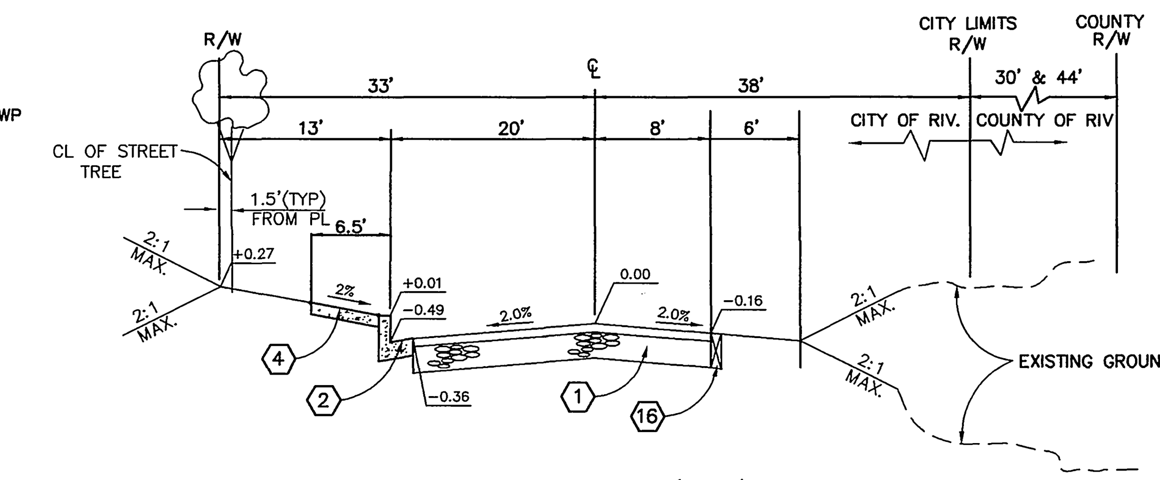

WOOD ROAD 71' R/W
TYPICAL SECTION
N.T.S.
CONSTRUCT 0.30 "A.C. OVER 0.65 ' C.A.B.
PER S.R. 1560 R= 26 T.I.= 6.0

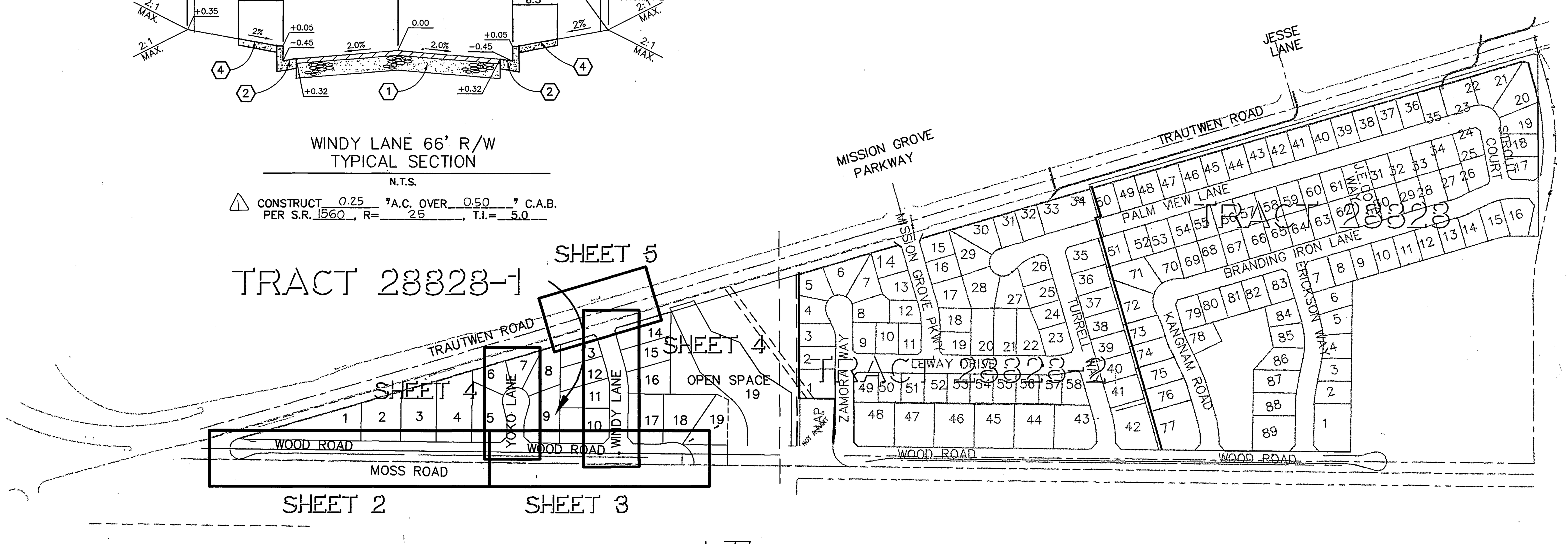

INDEX MAP
SCALE: 1"=300'

* GRADING FOR WOOD ROAD (WITHIN WMWD EASEMENT) CANNOT COMMENCE UNTIL 12" WATER PIPE IS RELOCATED.

GENERAL NOTES FOR STREET TREE PLANTING

1. All related work shall conform to the City of Riverside Park and Recreation Department Standards and City of Riverside Street Tree policies.
2. When calling for inspections contact the Street Tree Inspector a minimum of 48 hours in advance at (909) 351-6126 to schedule an inspection. A Field Notice will be issued as written approval for each stage of inspection. A verbal approval will not be acceptable. Inspections are required:
   a. After completion of final grading of the lots and when all utility services and sewer lateral have been marked, but prior to digging plant pits, all final street tree locations are to be spotted in the field by the Street Tree Inspector;
   b. while digging plant pits and planting/relocating trees;
   c. After planting and all other indicated or specified work has been completed, for start of maintenance;
   d. At end of the maintenance period, the contractor/developer shall call the Street Tree Inspector at (909)351-6126 for a final acceptance inspection in order to be released from maintenance, Developers bonds will not be released until after receipt of written notification from the City that the trees pass final inspection and the Park and Recreation Department is assuming maintenance responsibilities;
3. All STREET TREES ARE TO BE PLANTED PRIOR TO OCCUPANCY.
4 The developer shall be responsible to acceptably maintain all plantings for a minimun period of one (1) year.
5 Street tree planting shall be as follows:

Street Name	Botanical Name/ Common Name	Minimum Size	Approximate Spacing	# Required
Trautwein Road	See Reverse Frontage Landscape Plans #R-3579-L as prepared by David Neault & Associates dated ________			
Windy Lane	Pistacia chinese/ Chinese Pistache	15 gal.	45' o.c.	16 ea.
Wood Road	Liquidambar styraciflua/ American Sweet Gum	15 gal.	45' o.c.	31 ea.
Yoko Lane	Chionanthus retusa/ Chinese Fringe	15 gal	45' o.c.	9 ea.

* NOTE: In the interest of public safety and maintenance the Street Tree Inspector shall have the authority to revise the street tree quantities and locations shown on approved plans based upon field conditions found at the time of installation of the trees.

TRAFFIC & STREET NAME SIGN SCHEDULE

A	WOOD ROAD YOKO LANE	7600 19100
B	WOOD ROAD WINDY LANE	7700 19100
C	TRAUTWEIN ROAD WINDY LANE	7600 19150
D	WOOD ROAD MOSS ROAD	7600 18600
E	R-1 STOP SIGN	
F	R-41 RIGHT TURN ONLY	
G	R-10 ONE WAY (RIGHT)	
H	STRIPING DETAIL 21 PER CALTRANS STD	
I	12" SOLID WHITE (STOP BAR)	
J	"STOP" PAVEMENT MARKING	
K	TYPE IV (RIGHT) ARROW MARKING	

INSTALL PER CITY OF RIV. STDS. 662, 662A & 666, AND CALTRANS STD. A20A-A20D

CONSTRUCTION NOTES

1. CONSTRUCT A.C. OVER AGG. BASE PER TYP. SECTIONS
2. CONSTRUCT 6" CURB & GUTTER (TYPE I) PER CITY STD. 200
3. CONSTRUCT PCC CROSS-GUTTER PER CITY STD. 220
4. CONSTRUCT CURB SIDEWALK PER CITY STD. 325
5. CONSTRUCT WHEELCHAIR RAMPS PER CITY STD. 304 TYPE I
6. SAWCUT & REMOVE EXISTING PAVEMENT
7. PAINT REFLECTIVE YELLOW PAINT PER CALTRANS STD.
8. INSTALL R-7 "KEEP RIGHT" SIGN PER CALTRANS STD.
9. REMOVE R-16 "NO LEFT TURN" SIGN.
10. CONSTRUCT MEDIAN OPENING PER CITY STD. 121
11. CONSTRUCT REVERSE TAPER PER CITY STD. 122
12. CONSTRUCT 8" CURB ONLY (TYPE 2) PER CITY STD. 200
13. PROTECT-IN-PLACE EXISTING STREET LIGHTS
14. RELOCATE EXIST. POWER POLE THROUGH S.C.E.
15. CONSTRUCT A.C. BERM (TYPE 1) PER CITY STD. 250
16. CONSTRUCT 2"X4" REDWOOD HEADER
17. REMOVE & RELOCATE EXISTING CITY'S STREET LIGHT
18. REMOVE EXISTING CURB
19. CONSTRUCT PARABOLIC FLARE PER DETAIL "A" AND CITY STD. 123

GENERAL NOTES

1. It shall be the responsibility of the contractor to clear the right of way in accordance with the provisions of low as it affects each utility including irrigation lines and appurtenances and at no cost to the City.
2. Construction shall be in accordance with the City of Riverside Dept. of Public Works, Standard Drawings, its supplemental notes, and the Standard Specifications for Public Works Construction, Current Edition.
3. Trim edge of existing pavement where new pavement joins to a smooth, straight line. Construct match-up paving as shown on plan and overlay paving as directed in the field to produce a smooth section.
4. Construct driveway approaches per Std. Dwg. 302. Exact size and location to be staked by the Private Engineer prior to construction of the curb and gutter and as approved by the Traffic Engineer.
5. The subdivider shall arrange for a soil test to be made by a soils engineer after the streets have been prepared to rough grade and prior to curb and gutter construction. Depth of base material and A.C. paving shall be determined by the City of Riverside design standards and test procedures.
6. All flagged elevations shall be staked in the field by the private engineer.
7. The private engineer signing these plans is responsible for assuring the accuracy and acceptability of the work hereon. In the event of discrepancies arising during construction, the private engineer shall be responsible for determining an acceptable solution and revising the plans for approval by the City.
8. The developer shall be responsible for preserving or re-establishing and referencing survey monuments destroyed, disturbed or buried as a result of construction shown hereon.
9. On all areas within public right of way where the fill is one (1) foot or greater, a letter will be required from the soils engineeer, certifying the compaction of the fill below subgrade, prior to issuance of the Construction Permit/Cut Sheets.
10. All traffic signs shall be installed prior to opening the streets to traffic.
11. See City of Riverside Public Utilities Dwg. UOL5-604780 for location & quantity of required street lights.
12. Notice to contractor. The existence and location of any underground utility pipes or structures shown on these plans were obtained by a search of the available records. To the best of our knowledge there are no existing utilities except as shown on these plans. The contractor is required to take precautionary measures to protect the utility lines shown and any other lines not of record or not shown on these plans.
13. Contractor agrees that he shall assume sole and complete responsibility for job site conditions during the course of construction of this project, including safety of all persons and property; that this requirement shall apply continuously and not be limited to normal working hours; and that the contractor shall defend, indemnify and hold the owner and the engineer harmless from any and all liability, real or alleged, in connection with the performance of work on this project, excepting for liability arising from the sole negligence of the owner or engineer.
14. Any traffic control striping obliterated and/or badly worn during construction shall be restored by the contractor within five days after notification from the City Inspectors.
15. The contractor shall call in a location request to Underground Service Alert (USA), Phone No. 1-800-227-2600, two working days before digging. No construction permit will be issued by the Public Works Department involving excavation for underground facilities unless the applicant has been provided an inquiry identification number by U.S.A.
16. Quantities shown are for information only and the City of Riverside is not responsible for their accuracy.
17. The developer shall give WMWD five (5) working days written notice prior to the start of construction and to allow WMWD ten (10) working days for completion of work. Phone: (909) 780-4170.
18. In pavement overlay areas, distressed existing pavement shall be removed and replaced as directed by the inspector prior to overlaying with A.C. paving.
19. The contractor shall coordinate trenching for cable television with other trenching within the subdivision.
20. Final striping for traffic control and/or pavement marking to be the responsibility of the developer.
21. No person shall perform any construction activity or install any objects within the public rights-of way or easements of the City of Riverside without a valid Construction Permit or, a Street Opening Permit or an Encroachment Permit issued by City's Public Works Department.

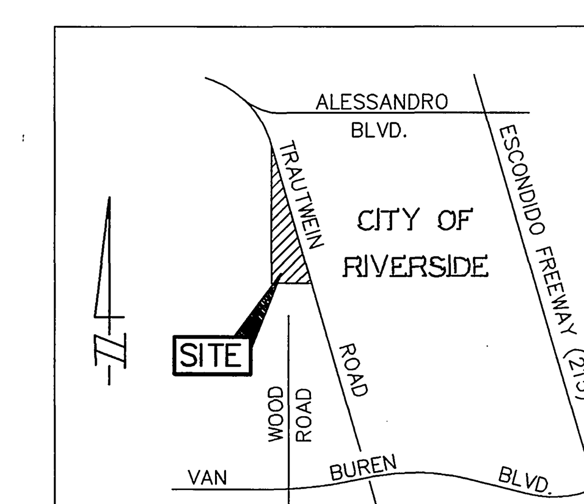

VICINITY MAP
N.T.S.
Thomas Bros. Map, 1997 Edition
Riverside Co., Page 746, E-1

CITY OF RIVERSIDE PUBLIC UTILITIES DEPARTMENT-ELECTRIC OVERHEAD & UNDERGROUND SHEETS 1-5	PACIFIC BELL TELEPHONE SHEETS 1-5	CHARTER COMMUNICATIONS SHEETS 1-5	REVIEWED BY W.M.W.D FOR NON-INTERFERENCE COMPLIANCE ONLY SHEETS 1 THROUGH 5	CITY OF RIVERSIDE PLANNING DEPARTMENT
APPROVED BY [signature] DATE 10/10/00	APPROVED BY [signature] DATE 10/11/00	APPROVED BY [signature] DATE 10-17-00	CIVIL ENGINEER #46212 [signature] DATE 11/3/00	APPROVED BY [signature] DATE 11/13/00

* AS-BUILT PER PLANS 8-26-03 GH

Underground Service Alert
Call: TOLL FREE 1 - 800 227-2600
TWO WORKING DAYS BEFORE YOU DIG

PRIVATE ENGINEERING NOTE

CONSTRUCTION CONTRACTOR AGREES THAT IN ACCORDANCE WITH GENERALLY ACCEPTED CONSTRUCTION PRACTICES, CONSTRUCTION CONTRACTOR WILL BE REQUIRED TO ASSUME SOLE AND COMPLETE RESPONSIBILITY FOR JOB SITE CONDITIONS DURING THE COURSE OF CONSTRUCTION OF THE PROJECT, INCLUDING SAFETY OF ALL PERSONS AND PROPERTY; THAT THIS REQUIREMENT SHALL BE MADE TO APPLY CONTINUOUSLY AND NOT BE LIMITED TO NORMAL WORKING HOURS, AND CONSTRUCTION CONTRACTOR FURTHER AGREES TO DEFEND, INDEMNIFY AND HOLD DESIGN PROFESSIONAL HARMLESS FROM ANY AND ALL LIABILITY, REAL OR ALLEGED, IN CONNECTION WITH THE PERFORMANCE OF WORK ON THIS PROJECT, EXCEPTING LIABILITY ARISING FROM THE SOLE NEGLIGENCE OF DESIGN PROFESSIONAL.

REGISTERED PROFESSIONAL ENGINEER — TECK C. LOH No. 50293 Exp. 6-30-01 CIVIL — STATE OF CALIFORNIA

PREPARED UNDER THE DIRECTION OF:
[signature]
TECK C. LOH
REGISTERED CIVIL ENGINEER NO. 50293
EXPIRATION DATE: 6-30-01 DATE: 9/15/00

CEG CANTY ENGINEERING GROUP, INC.
CIVIL ENGINEERING – PLANNING – SURVEYING
2020 IOWA AVENUE, SUITE 102, P.O. BOX 52050, RIVERSIDE, CA 92517
TEL (909) 683 - 5234 FAX (909) 683 - 5301
CITY OF RIVERSIDE BUSINESS TAX ACCOUNT NO: 69372 EXP DATE: 4/7/01

SCALE: AS SHOWN
DATE: JAN. 2000

BENCH MARK CITY OF RIVERSIDE BENCH MARK: E8-A2 P.K. NAIL AND TAG IN TOP OF 35' X 50' X 20' GRANITE BOULDER, 100' W'LY OF TRAUTWIEN ROAD AND 500 FEET N'LY OF JESSE LANE. FB 735\74 ELEV: 1588.453

MARK	REVISIONS	APPR.	DATE
1	ADDED PAVEMENT DESIGN SECTIONS	TJB	2/22/01

DESIGNED BY K.W. DRAWN BY T.L. CHECKED BY J.W.C.

CITY OF RIVERSIDE, CALIFORNIA
DEPARTMENT OF PUBLIC WORKS

APPROVED BY	BY	DATE
PRINCIPAL ENGR.	[initials]	12/5/2000
PARK DEPARTMENT	[initials]	11/03/00
TRAFFIC DIVISION	[initials]	12/4/00
DEPUTY P.W. DIRECTOR	TJB	12/5/00
STREET SERVICES	[initials]	10/17/00

APPROVED BY [signature] DIRECTOR OF PUBLIC WORKS
DATE 12-6-00

TRACT No. 28828-1
STREET IMPROVEMENT PLAN
TITLE SHEET
FOR: SHEFFIELD HOMES

PROJECT NO. R-3579
SHEET 1 OF 5
FILE NO.: 1022-002

PC-4260-S1

INDEXED 1-9-01 GH

H:\CEG CLIENT DIRECTORY\PAUL GARRETT\Tract 28828 Wood Canyon (1046-001)\CAD\TRACT 28828\STREET\TR28828-1\TITLE.dwg Fri Sep 15 16:00:15 2000 H. ROCHA

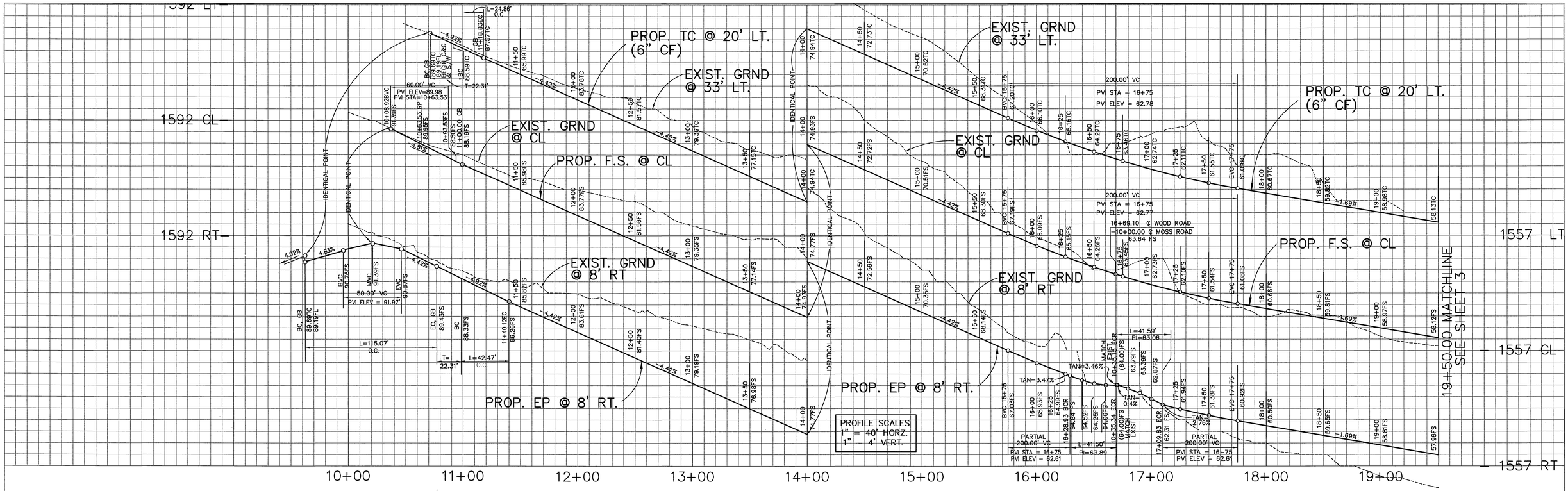

CONSTRUCTION NOTES

1. CONSTRUCT A.C. OVER AGG. BASE PER TYP. SECTIONS
2. CONSTRUCT 6" CURB & GUTTER (TYPE I) PER CITY STD. 200
4. CONSTRUCT CURB SIDEWALK PER CITY STD. 325
14. RELOCATE EXIST. POWER POLE THROUGH S.C.E.
16. CONSTRUCT 2"x4" REDWOOD HEADER

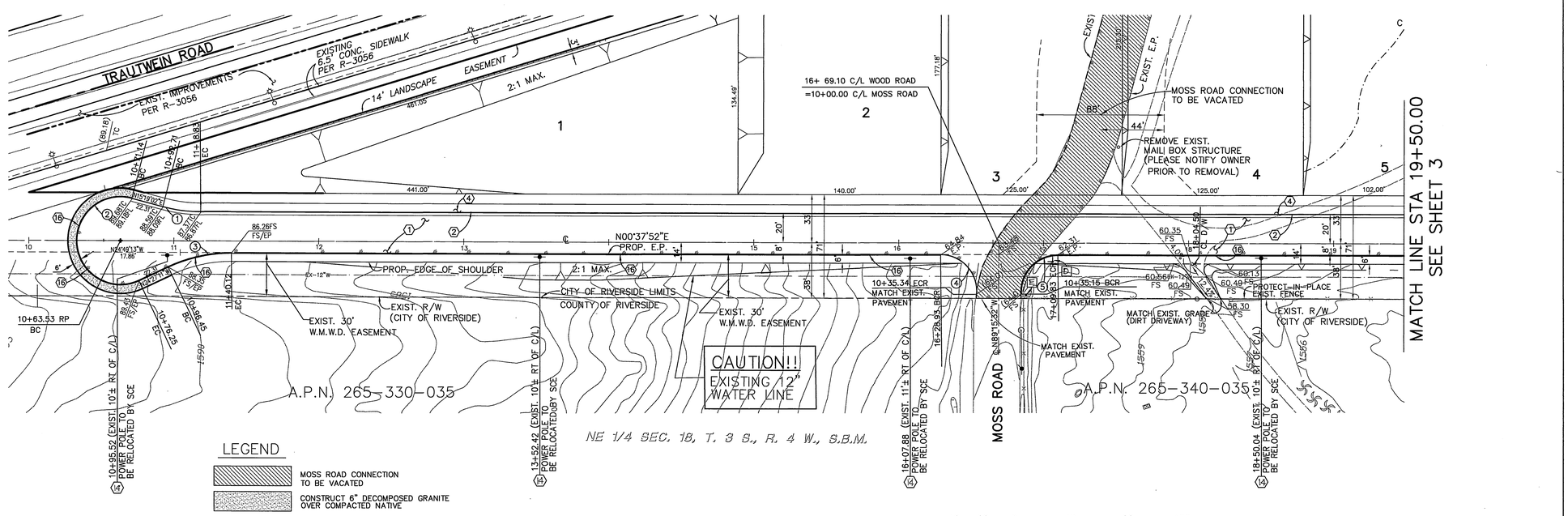

DATA

	DELTA	RADIUS	LEN.	TANGENT
1	14°41'10"	97.00'	24.86'	12.50'
2	219°46'13"	30.00'	115.07'	82.94'
3	25°05'03"	97.00'	42.47'	21.58'
4	95°07'13"	25.00'	41.50'	27.34'
5	93°47'06"	25.41'	41.59'	27.15'

LEGEND

- MOSS ROAD CONNECTION TO BE VACATED
- CONSTRUCT 6" DECOMPOSED GRANITE OVER COMPACTED NATIVE

WOOD ROAD

*AS-BUILT PER PLANS 8-25-03 GH

Underground Service Alert
Call: TOLL FREE 1 - 800 227-2600
TWO WORKING DAYS BEFORE YOU DIG

PRIVATE ENGINEERING NOTE

CONSTRUCTION CONTRACTOR AGREES THAT IN ACCORDANCE WITH GENERALLY ACCEPTED CONSTRUCTION PRACTICES, CONSTRUCTION CONTRACTOR WILL BE REQUIRED TO ASSUME SOLE AND COMPLETE RESPONSIBILITY FOR JOB SITE CONDITIONS DURING THE COURSE OF CONSTRUCTION OF THE PROJECT, INCLUDING SAFETY OF ALL PERSONS AND PROPERTY; THAT THIS REQUIREMENT SHALL BE MADE TO APPLY CONTINUOUSLY AND NOT BE LIMITED TO NORMAL WORKING HOURS, AND CONSTRUCTION CONTRACTOR FURTHER AGREES TO DEFEND, INDEMNIFY AND HOLD DESIGN PROFESSIONAL HARMLESS FROM ANY AND ALL LIABILITY, REAL OR ALLEGED, IN CONNECTION WITH THE PERFORMANCE OF WORK ON THIS PROJECT, EXCEPTING LIABILITY ARISING FROM THE SOLE NEGLIGENCE OF DESIGN PROFESSIONAL.

REGISTERED PROFESSIONAL ENGINEER — TECK C. LOH No. 50293 — Exp. 6-30-01 — CIVIL — STATE OF CALIFORNIA

PREPARED UNDER THE DIRECTION OF: Teck Loh
REGISTERED CIVIL ENGINEER NO. 50293
EXPIRATION DATE: 6-30-01 DATE: 10/16/00

CANTY ENGINEERING GROUP, INC.
CIVIL ENGINEERING – PLANNING – SURVEYING
2020 IOWA AVENUE, SUITE 102, P.O. BOX 52050, RIVERSIDE, CA 92517
TEL (909) 683 – 5234 FAX (909) 683 – 5301

SCALE: 1"=40'
DATE: JAN. 2000

BENCH MARK CITY OF RIVERSIDE BENCH MARK: E8-A2 P.K. NAIL AND TAG IN TOP OF 35' X 50' X 20' GRANITE BOULDER, 100' W'LY OF TRAUTWEIN ROAD AND 500 FEET N'LY OF JESSE LANE. FB 735\74 ELEV: 1588.453

MARK	REVISIONS	APPR.	DATE

DESIGNED BY K.W. DRAWN BY T.L. CHECKED BY J.W.C.

CITY OF RIVERSIDE, CALIFORNIA
DEPARTMENT OF PUBLIC WORKS

APPROVED BY	BY	DATE
PRINCIPAL ENGR.		12/6/00
PARK DEPARTMENT		11/30/00
TRAFFIC DIVISION		12/4/00
DEPUTY P.W. DIRECTOR		12/5/00
STREET SERVICES		12/1/00

APPROVED BY R. McGrath
DIRECTOR OF PUBLIC WORKS
DATE 12-6-00

TRACT No. 28828-1
STREET IMPROVEMENT PLAN
WOOD ROAD
STA. 10+34.05 TO STA. 19+50.00
FOR: SHEFFIELD HOMES

PROJECT NO. R-3579
SHEET 2 OF 5
FILE NO.: 1022-002

INDEXED 1-9-01 GH

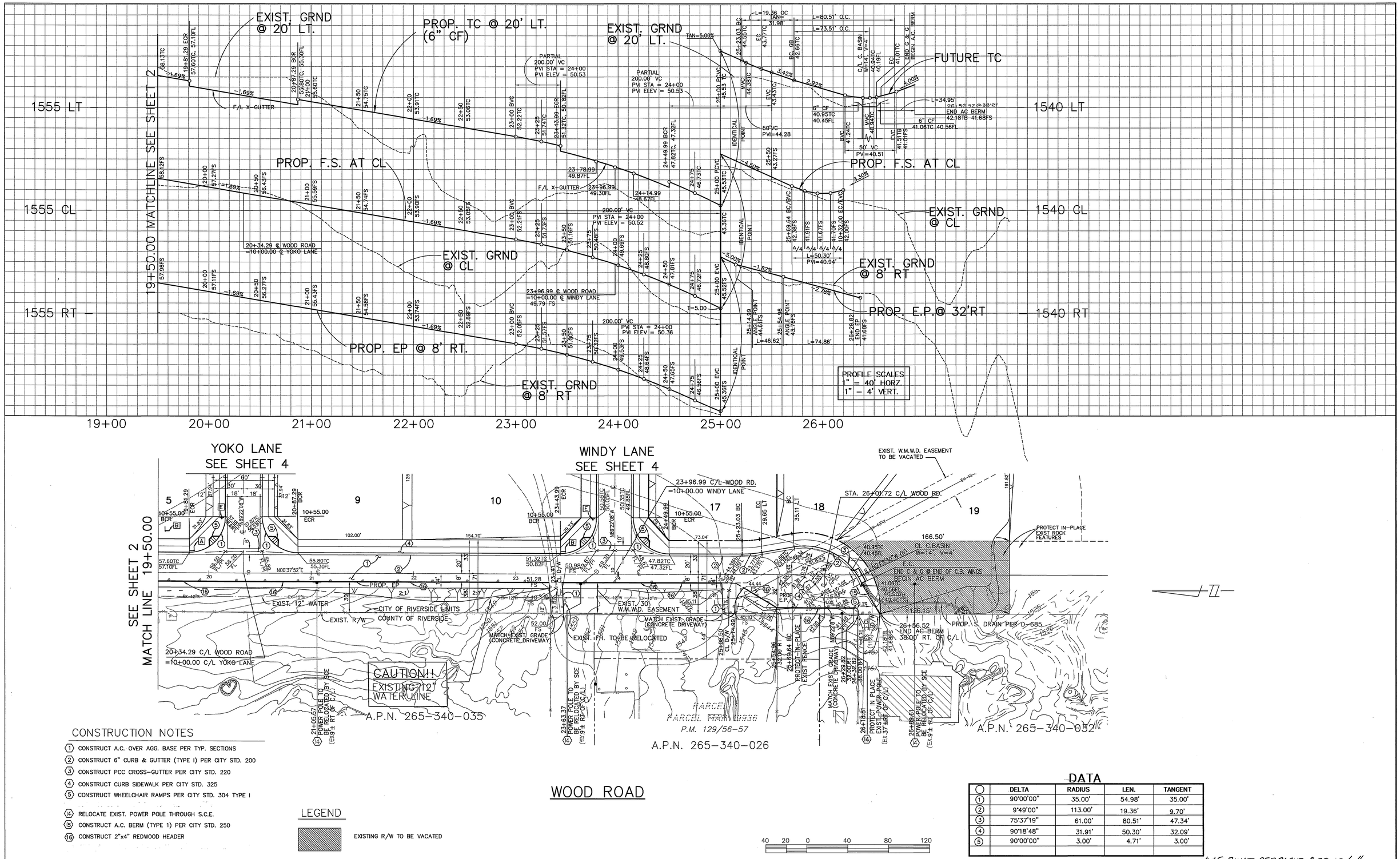

CONSTRUCTION NOTES

1. CONSTRUCT A.C. OVER AGG. BASE PER TYP. SECTIONS
2. CONSTRUCT 6" CURB & GUTTER (TYPE I) PER CITY STD. 200
3. CONSTRUCT PCC CROSS-GUTTER PER CITY STD. 220
4. CONSTRUCT CURB SIDEWALK PER CITY STD. 325
5. CONSTRUCT WHEELCHAIR RAMPS PER CITY STD. 304 TYPE I

14. RELOCATE EXIST. POWER POLE THROUGH S.C.E.
15. CONSTRUCT A.C. BERM (TYPE 1) PER CITY STD. 250
16. CONSTRUCT 2"x4" REDWOOD HEADER

LEGEND

EXISTING R/W TO BE VACATED

DATA

○	DELTA	RADIUS	LEN.	TANGENT
1	90°00'00"	35.00'	54.98'	35.00'
2	9°49'00"	113.00'	19.36'	9.70'
3	75°37'19"	61.00'	80.51'	47.34'
4	90°18'48"	31.91'	50.30'	32.09'
5	90°00'00"	3.00'	4.71'	3.00'

*AS-BUILT PER PLANS 8-26-03 GH

Underground Service Alert
Call: TOLL FREE 1 - 800 227-2600
TWO WORKING DAYS BEFORE YOU DIG

PRIVATE ENGINEERING NOTE

CONSTRUCTION CONTRACTOR AGREES THAT IN ACCORDANCE WITH GENERALLY ACCEPTED CONSTRUCTION PRACTICES, CONSTRUCTION CONTRACTOR WILL BE REQUIRED TO ASSUME SOLE AND COMPLETE RESPONSIBILITY FOR JOB SITE CONDITIONS DURING THE COURSE OF CONSTRUCTION OF THE PROJECT, INCLUDING SAFETY OF ALL PERSONS AND PROPERTY; THAT THIS REQUIREMENT SHALL BE MADE TO APPLY CONTINUOUSLY AND NOT BE LIMITED TO NORMAL WORKING HOURS, AND CONSTRUCTION CONTRACTOR FURTHER AGREES TO DEFEND, INDEMNIFY AND HOLD DESIGN PROFESSIONAL HARMLESS FROM ANY AND ALL LIABILITY, REAL OR ALLEGED, IN CONNECTION WITH THE PERFORMANCE OF WORK ON THIS PROJECT, EXCEPTING LIABILITY ARISING FROM THE SOLE NEGLIGENCE OF DESIGN PROFESSIONAL.

REGISTERED PROFESSIONAL ENGINEER TECK C. LOH No. 50293 Exp. 6-30-01 CIVIL STATE OF CALIFORNIA

PREPARED UNDER THE DIRECTION OF:
REGISTERED CIVIL ENGINEER NO. 50293
EXPIRATION DATE: 6-30-01 DATE: 12/15/00

CEG CANTY ENGINEERING GROUP, INC.
CIVIL ENGINEERING – PLANNING – SURVEYING
2020 IOWA AVENUE, SUITE 102, P.O. BOX 52050, RIVERSIDE, CA 92517
TEL (909) 683 – 5234 FAX (909) 683 – 5301

SCALE: 1"=40'
DATE: JAN. 2000

BENCH MARK: EB-A2
P.K. NAIL AND TAG ON TOP OF 35' X 50' X 20' GRANITE BOULDER, 100' W'LY OF TRAUTWIEN ROAD AND 0.3 MILE N'LY OF WOOD ROAD. FB 735\74 ELEV: 1588.453

MARK	REVISIONS	APPR.	DATE

DESIGNED BY K.W. DRAWN BY T.L. CHECKED BY J.W.C.

CITY OF RIVERSIDE, CALIFORNIA
DEPARTMENT OF PUBLIC WORKS

APPROVED BY	BY	DATE
PRINCIPAL ENGR.		12/14/00
PARK DEPARTMENT		12/01/00
TRAFFIC DIVISION		12/4/00
DEPUTY P.W. DIRECTOR		12/5/00
STREET SERVICES		12/11/00

APPROVED BY R. McGrath
DIRECTOR OF PUBLIC WORKS
DATE 12-6-00

TRACT No. 28828-1
STREET IMPROVEMENT PLAN
WOOD ROAD
STA. 19+50 TO STA. 26+21.76
FOR: SHEFFIELD HOMES

PROJECT NO. R-3579
SHEET 3 OF 5
FILE NO.: 1022-002

PC-4260-S1

INDEXED 1-9-01 GH

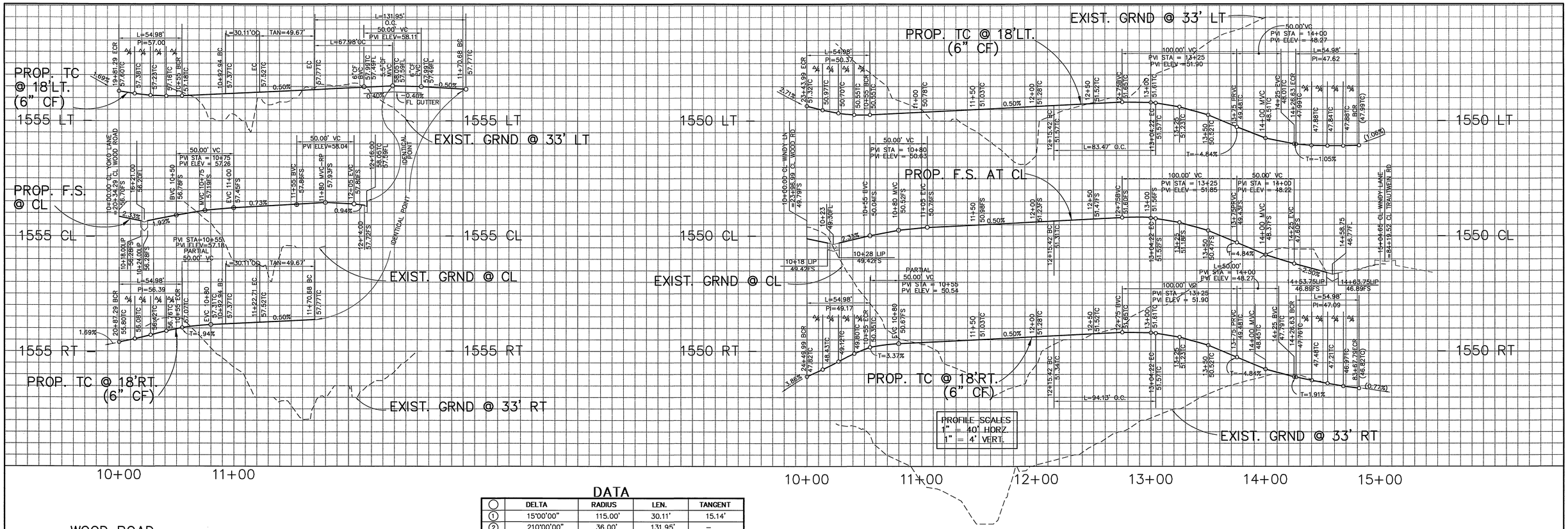

DATA

◯	DELTA	RADIUS	LEN.	TANGENT
1	15°00'00"	115.00'	30.11'	15.14'
2	210°00'00"	36.00'	131.95'	–
3	16°57'35"	282.00'	83.47'	42.04'
4	16°57'35"	300.00'	88.80'	44.73'
5	16°57'35"	318.00'	94.13'	47.41'
6	90°00'00"	35.00'	54.98'	35.00'

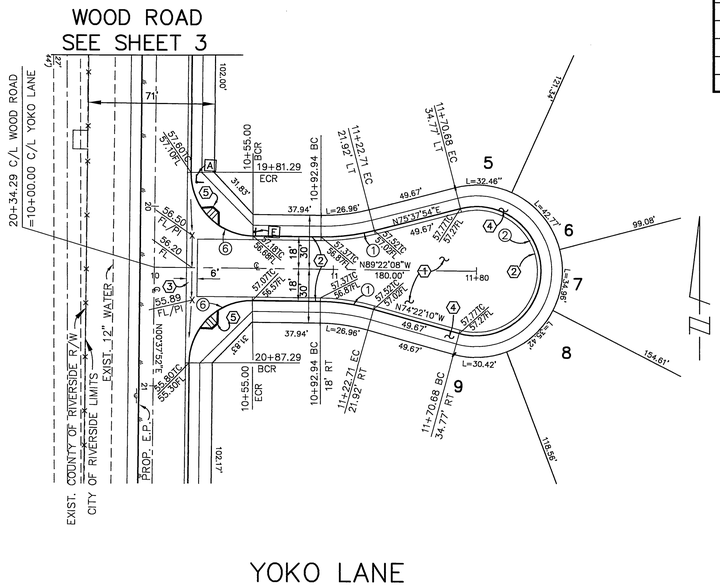

CONSTRUCTION NOTES

1. CONSTRUCT A.C. OVER AGG. BASE PER TYP. SECTIONS
2. CONSTRUCT 6" CURB & GUTTER (TYPE I) PER CITY STD. 200
3. CONSTRUCT PCC CROSS-GUTTER PER CITY STD. 220
4. CONSTRUCT CURB SIDEWALK PER CITY STD. 325
5. CONSTRUCT WHEELCHAIR RAMPS PER CITY STD. 304 TYPE I
6. SAWCUT AND REMOVE EX C&G.
17. REMOVE AND RELOCATE EXISTING CITY STREET LIGHT

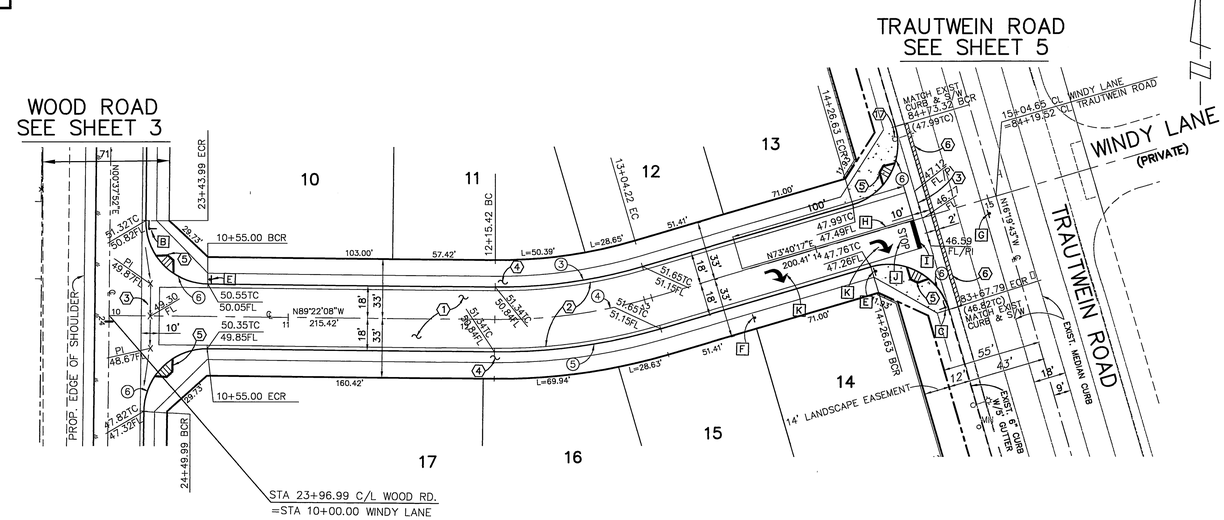

SCALE IN FEET

*AS-BUILT PER PLANS 8-26-03 KH

Underground Service Alert
Call: TOLL FREE 1 – 800 227–2600
TWO WORKING DAYS BEFORE YOU DIG

PRIVATE ENGINEERING NOTE

CONSTRUCTION CONTRACTOR AGREES THAT IN ACCORDANCE WITH GENERALLY ACCEPTED CONSTRUCTION PRACTICES, CONSTRUCTION CONTRACTOR WILL BE REQUIRED TO ASSUME SOLE AND COMPLETE RESPONSIBILITY FOR JOB SITE CONDITIONS DURING THE COURSE OF CONSTRUCTION OF THE PROJECT, INCLUDING SAFETY OF ALL PERSONS AND PROPERTY, THAT THIS REQUIREMENT SHALL BE MADE TO APPLY CONTINUOUSLY AND NOT BE LIMITED TO NORMAL WORKING HOURS, AND CONSTRUCTION CONTRACTOR FURTHER AGREES TO DEFEND, INDEMNIFY AND HOLD DESIGN PROFESSIONAL HARMLESS FROM ANY AND ALL LIABILITY, REAL OR ALLEGED, IN CONNECTION WITH THE PERFORMANCE OF WORK ON THIS PROJECT, EXCEPTING LIABILITY ARISING FROM THE SOLE NEGLIGENCE OF DESIGN PROFESSIONAL.

REGISTERED PROFESSIONAL ENGINEER — TECK C. LOH No. 50293 — Exp. 6-30-01 — CIVIL — STATE OF CALIFORNIA

PREPARED UNDER THE DIRECTION OF: T. Loh
REGISTERED CIVIL ENGINEER NO. 50293
EXPIRATION DATE: 6-30-01 DATE: 10/10/00

CEG CANTY ENGINEERING GROUP, INC.
CIVIL ENGINEERING – PLANNING – SURVEYING
2020 IOWA AVENUE, SUITE 102, P.O. BOX 52050, RIVERSIDE, CA 92517
TEL (909) 683 – 5234 FAX (909) 683 – 5301

SCALE: 1"=40'
DATE: JAN. 2000

BENCH MARK: E8–A2
P.K. NAIL AND TAG ON TOP OF 35' X 50' X 20' GRANITE BOULDER, 100' W'LY OF TRAUTWEN ROAD AND 0.3 MILE N'LY OF WOOD ROAD. FB 735\74 ELEV: 1588.453

MARK	REVISIONS	APPR.	DATE

DESIGNED BY K.W. DRAWN BY T.L. CHECKED BY J.W.C.

CITY OF RIVERSIDE, CALIFORNIA
DEPARTMENT OF PUBLIC WORKS

APPROVED BY	BY	DATE
PRINCIPAL ENGR.		12/6/00
PARK DEPARTMENT		12/11/00
TRAFFIC DIVISION		12/11/00
DEPUTY P.W. DIRECTOR		12/6/00
STREET SERVICES		12/7/00

APPROVED BY R. M. Scott
DIRECTOR OF PUBLIC WORKS
DATE 12-6-00

TRACT No. 28828–1
STREET IMPROVEMENT PLAN
YOKO LANE
STA: 10+00 TO STA: 11+80
WINDY LANE
STA: 10+00 TO STA: 15+00

FOR: SHEFFIELD HOMES

PROJECT NO. R–3579
SHEET 4 OF 5
FILE NO.: 1022–002

PC–4260.S1

INDEXED 1-9-01 KH

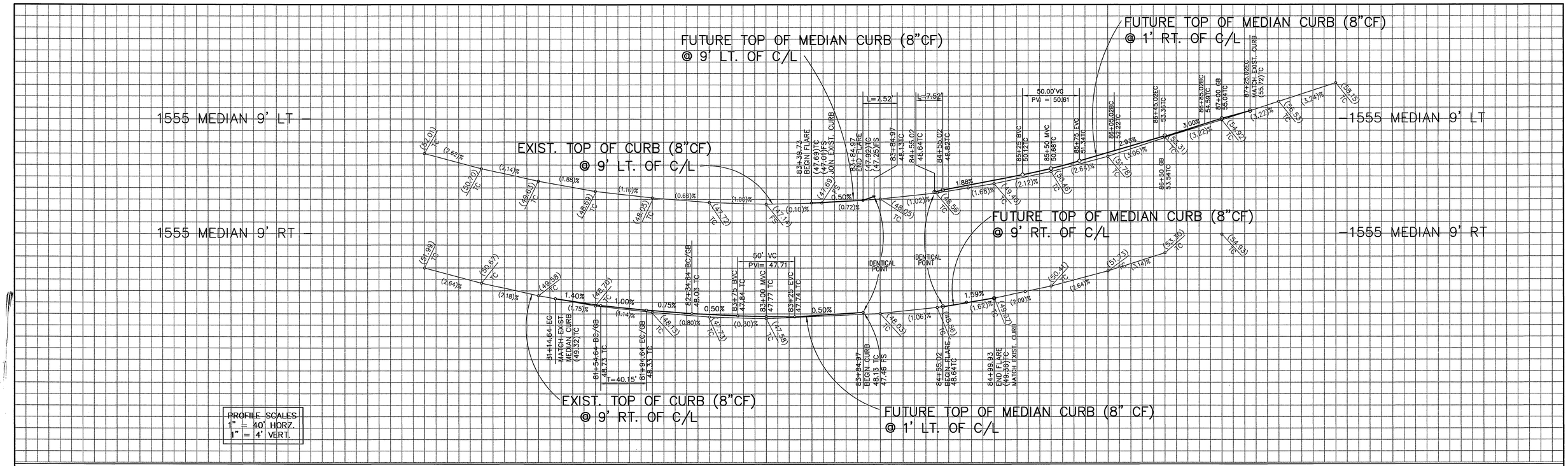

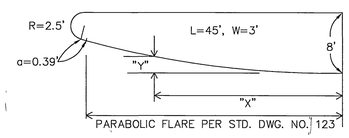

DETAIL "A"
N.T.S.

DIST. X (FT.)	10	20	30	40	45
OFFSET Y (FT.)	.16	.60	1.34	2.38	3.00

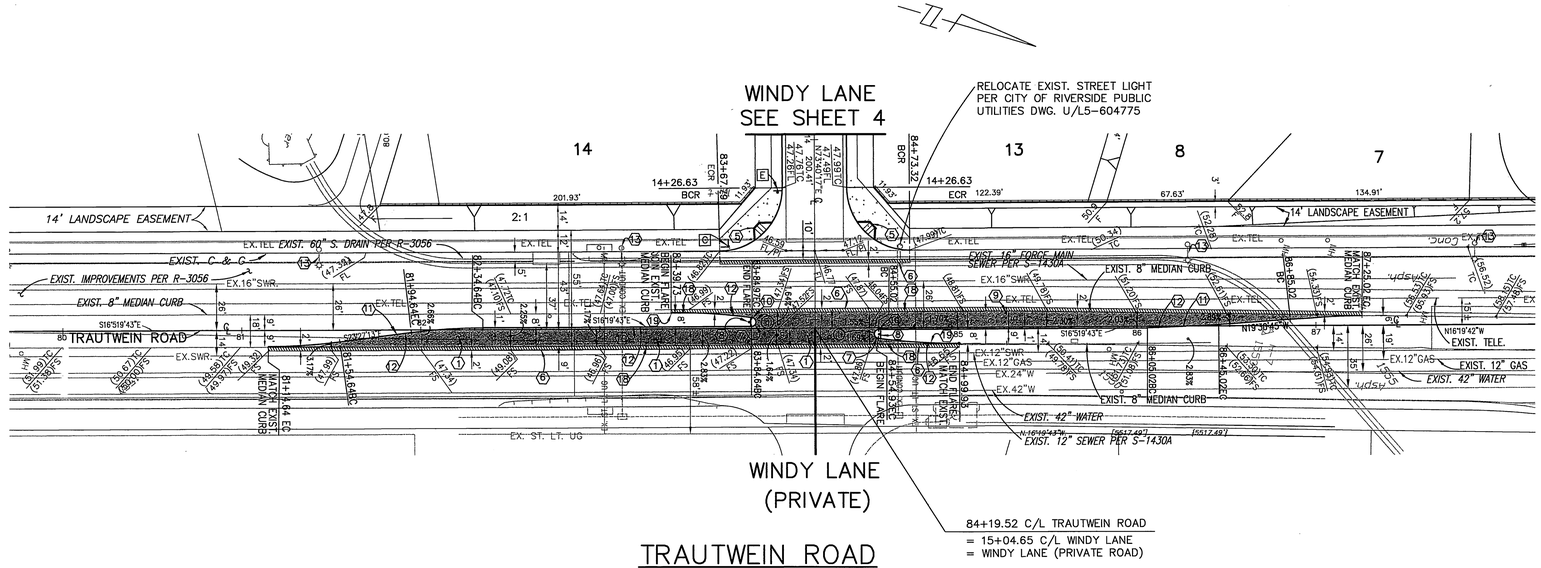

TRAUTWEIN ROAD
(FUTURE MEDIAN OPENING)

CONSTRUCTION NOTES * (FUTURE CONSTRUCTION)

1. CONSTRUCT A.C. OVER AGG. BASE PER TYP. SECTIONS
6. SAWCUT & REMOVE EXISTING PAVEMENT
7. PAINT REFLECTIVE YELLOW PAINT PER CALTRANS STD.
8. INSTALL R-7 "KEEP RIGHT" SIGN PER CITY STD. 666.
9. REMOVE R-16 "NO LEFT TURN" SIGN.
10. CONSTRUCT MEDIAN OPENING PER CITY STD. 121
11. CONSTRUCT REVERSE TAPER PER CITY STD. 122
12. CONSTRUCT 8" CURB ONLY (TYPE 2) PER CITY STD. 200
13. PROTECT-IN-PLACE EXISTING STREET LIGHT
18. REMOVE EXIST. CURB
19. CONSTRUCT PARABOLIC FLARE PER DETAIL "A" AND CITY STD. NO. 123.

LEGEND

- REMOVE AND REPLACE AC PAVING
- CONSTRUCT AC OVER AGGREGATE BASE

CURVE TABLE				
CURVE	DELTA	RADIUS	LENGTH	TANGENT
1	172°24'19"	2.50	7.52	37.67

40 20 0 40 80 120
SCALE IN FEET

*AS-BUILT PER PLANS 8-26-03 GH

Underground Service Alert
Call: TOLL FREE
1 - 800
227-2600
TWO WORKING DAYS BEFORE YOU DIG

PRIVATE ENGINEERING NOTE

CONSTRUCTION CONTRACTOR AGREES THAT IN ACCORDANCE WITH GENERALLY ACCEPTED CONSTRUCTION PRACTICES, CONSTRUCTION CONTRACTOR WILL BE REQUIRED TO ASSUME SOLE AND COMPLETE RESPONSIBILITY FOR JOB SITE CONDITIONS DURING THE COURSE OF CONSTRUCTION OF THE PROJECT, INCLUDING SAFETY OF ALL PERSONS AND PROPERTY; THAT THIS REQUIREMENT SHALL BE MADE TO APPLY CONTINUOUSLY AND NOT BE LIMITED TO NORMAL WORKING HOURS, AND CONSTRUCTION CONTRACTOR FURTHER AGREES TO DEFEND, INDEMNIFY AND HOLD DESIGN PROFESSIONAL HARMLESS FROM ANY AND ALL LIABILITY, REAL OR ALLEGED, IN CONNECTION WITH THE PERFORMANCE OF WORK ON THIS PROJECT, EXCEPTING LIABILITY ARISING FROM THE SOLE NEGLIGENCE OF DESIGN PROFESSIONAL.

REGISTERED PROFESSIONAL ENGINEER
TECK C. LOH
No. 50293
Exp. 6-30-01
CIVIL
STATE OF CALIFORNIA

PREPARED UNDER THE DIRECTION OF:
REGISTERED CIVIL ENGINEER NO. 50293
EXPIRATION DATE: 6-30-01 DATE: 10/10/00

CANTY ENGINEERING GROUP, INC.
CIVIL ENGINEERING - PLANNING - SURVEYING
2020 IOWA AVENUE, SUITE 102, P.O. BOX 52050, RIVERSIDE, CA 92517
TEL (909) 683 - 5234 FAX (909) 683 - 5301

SCALE: 1"=40'
DATE: JAN. 2000

BENCH MARK CITY OF RIVERSIDE BENCH MARK: EB-A2
P.K. NAIL AND TAG IN TOP OF 35' X 50' X 20' GRANITE BOULDER, 100' W'LY OF TRAUTWEIN ROAD AND 500 FEET N'LY OF JESSE LANE. FB 735\74 ELEV: 1588.453

MARK	REVISIONS	APPR.	DATE

DESIGNED BY K.W. DRAWN BY T.L. CHECKED BY J.W.C.

CITY OF RIVERSIDE, CALIFORNIA
DEPARTMENT OF PUBLIC WORKS

APPROVED BY	BY	DATE
PRINCIPAL ENGR.		12/6/00
PARK DEPARTMENT		12/7/00
TRAFFIC DIVISION		12/11/00
DEPUTY P.W. DIRECTOR		12/5/00
STREET SERVICES		12/7/00

APPROVED BY R. McGrath
DIRECTOR OF PUBLIC WORKS
DATE 12-6-00

TRACT No. 28828-1
STREET IMPROVEMENT PLAN
TRAUTWEIN ROAD
(FUTURE MEDIAN OPENING)
STA. 10+00.00 TO STA. 17+87.66

FOR: SHEFFIELD HOMES

PROJECT NO. R-3579
SHEET 5 OF 5
FILE NO.: 1022-002

PC-4260-S1

INDEXED 1-9-01 GH