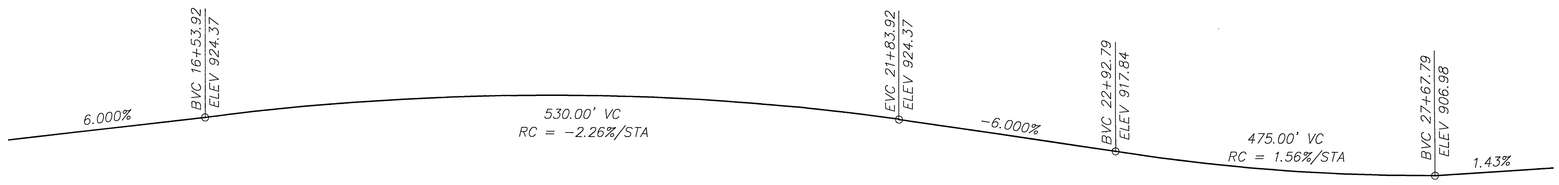

PROFILE GRADE

NO SCALE

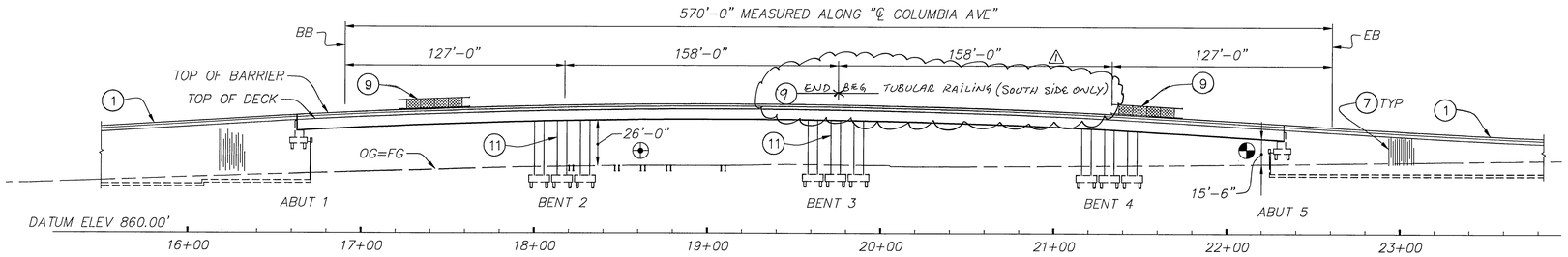

ELEVATION

1" = 40'-0"

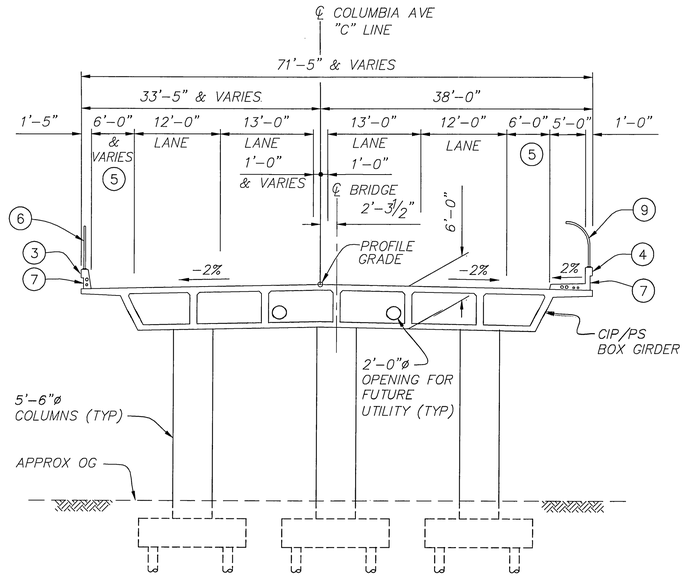

TYPICAL SECTION

1" = 10'-0"

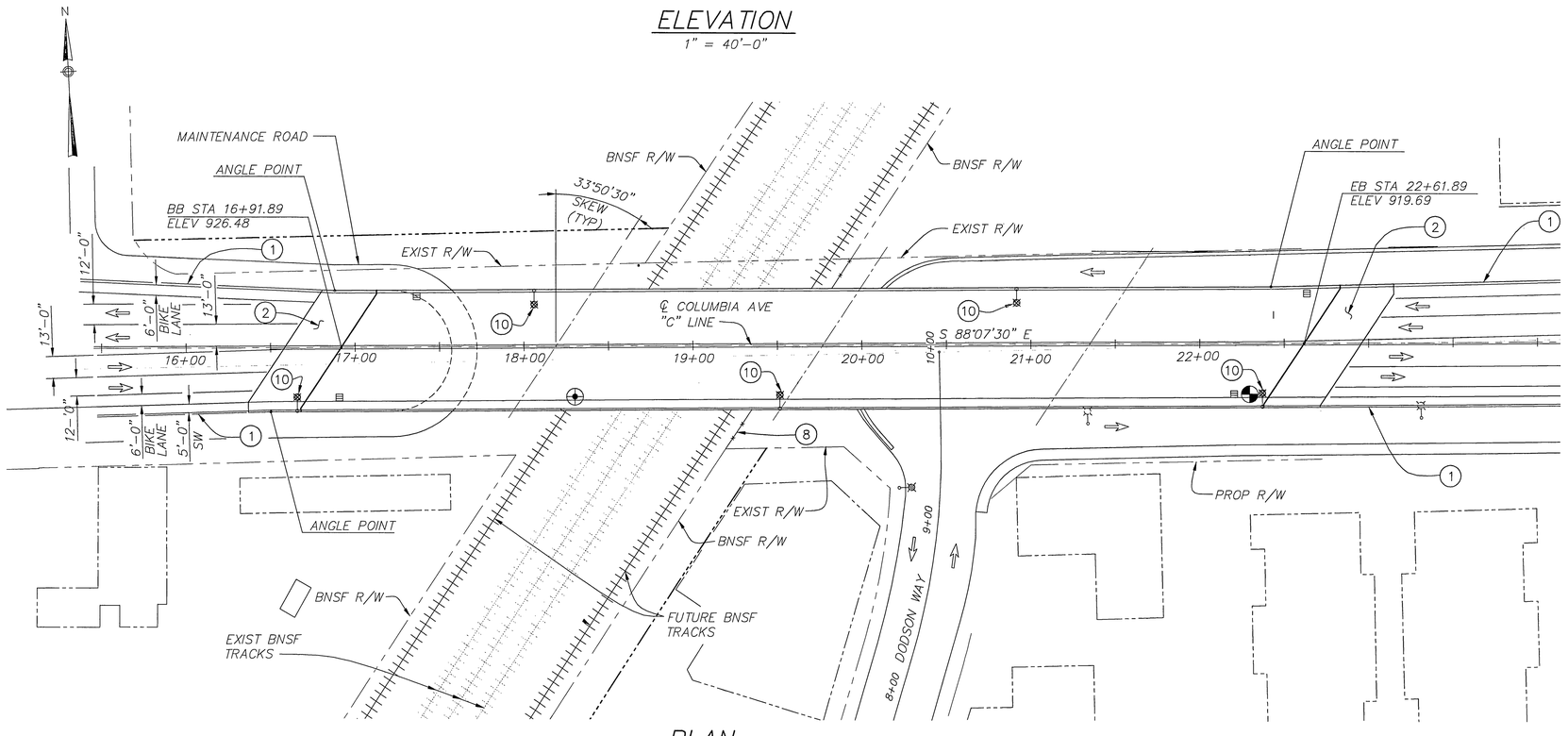

PLAN

1" = 40'-0"

LEGEND:

- MINIMUM VERTICAL CLEARANCE OVER RAILROAD (SEE NOTE 3)
- DIRECTION OF TRAFFIC
- MINIMUM VERTICAL CLEARANCE OVER DODSON WAY
- DENOTES DECK DRAIN
- (1) MSE RETAINING WALLS, SEE WALL PLANS
- (2) STRUCTURE APPROACH TYPE N(30)S
- (3) CONCRETE BARRIER TYPE 732
- (4) CONCRETE BARRIER TYPE 26 (MOD)
- (5) BIKE LANE
- (6) CHAIN LINK RAILING TYPE 7 ABUT #1 TO BENT #3
- (7) ARCHITECTURAL TEXTURE
- (8) CHAIN LINK FENCE (SEE ROAD PLANS)
- (9) CHAIN LINK RAILING TYPE 3 (MOD) ABUT #1 TO BENT #3
- (10) STREET LIGHT ELECTROLIER (ELECTRICAL PLANS)
- (11) PAINT "D.O.T. CROSSING #026475S AND P.U.C. CROSSING #2B-7.90" ON MIDDLE COLUMN FACING TRACKS.

NOTES:

1. FOR GENERAL NOTES AND INDEX TO PLANS, SEE "GENERAL NOTES AND INDEX TO PLANS" SHEET.
2. FOR PILE DATA, SEE "FOUNDATION PLAN" SHEET.
3. MINIMUM VERTICAL CLEARANCE OVER RAILROAD SHOWN IS OVER FUTURE TRACK. FOR CLEARANCE OVER EXISTING TRACKS, SEE "PART STRUCTURE ELEVATION AT BNSF RR" SHEET.

AS BUILT
DATE 9-14-10

HORIZ

DMJM HARRIS | AECOM
800 NORTH HAVEN, SUITE 410
ONTARIO, CA 91764
T (909)291-8150 F (909)291-8166

REGISTERED PROFESSIONAL ENGINEER
LIAN HE
No. 55635
Exp. 12-31-08
CIVIL
STATE OF CALIFORNIA

MARK	REVISIONS	APPR.	DATE
1	AS BUILT	F.R.	9/14/10

DESIGNED BY LH DRAWN BY LR CHECKED BY MW

COLUMBIA AVENUE OVERPASS AT BNSF RAILROAD

GENERAL PLAN

SCALE: AS SHOWN

ACCT. NO.
R-4036
S-01
SHEET 45 OF 103
BRIDGE # 56C0572

DWG: P:\60004223 Columbia Grade Sep\CADD\Struct\Sheet\BRIDGE\ST-01.dwg xbdr-bridge.dwg xrow_final.dwg X-ELECTRICAL.dwg
TIME: 7-15-08 - 4:38pm User: LondoseE XRef Files: X-BRIDGE-COLUMBIA-S.dwg

GENERAL NOTES
LOAD FACTOR DESIGN

DESIGN:	CALTRANS BRIDGE DESIGN SPECIFICATIONS – APRIL 2000 (LFD) (1996 AASHTO WITH INTERIMS AND REVISIONS BY CALTRANS)
SEISMIC DESIGN:	CALTRANS SEISMIC DESIGN CRITERIA (SDC) VERSION 1.4 JUNE 2006
DEAD LOAD:	INCLUDES 35 PSF FOR FUTURE WEARING SURFACE
LIVE LOADING:	HS20–44 AND ALTERNATIVE AND PERMIT DESIGN LOAD
SEISMIC LOADING:	SDC ARS CURVE FOR SOIL PROVIDE D (M=7.5±0.25) PEAK ROCK ACCELERATION = 0.5g WITH MODIFICATION FOR NEAR FAULT EFFECTS

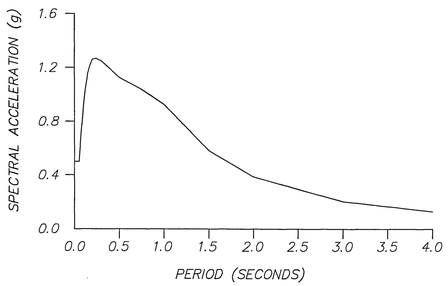

REINFORCED CONCRETE:	fy = 60,000 PSI f'c = 3,600 PSI (UNLESS OTHERWISE NOTED) n = 8.5 TRANSVERSE DECK SLABS (WORKING STRESS DESIGN) fs = 20,000 PSI fc = 1,200 PSI n = 10
PRESTRESSED CONCRETE:	SEE "PRESTRESSING NOTES" ON "GIRDER DETAILS NO. 1" SHEET

CALTRANS STANDARD PLANS DATED MAY 2006

A10A	ACRONYMS AND ABBREVIATIONS (SHEET 1 OF 2)
A10B	ACRONYMS AND ABBREVIATIONS (SHEET 2 OF 2)
A10C	SYMBOLS (SHEET 1 OF 2)
A10D	SYMBOLS (SHEET 2 OF 2)
A62C	LIMITS OF PAYMENT FOR EXCAVATION AND BACKFILL – BRIDGE
B0–1	BRIDGE DETAILS
B0–3	BRIDGE DETAILS
B0–5	BRIDGE DETAILS
B0–13	BRIDGE DETAILS
B7–1	BOX GIRDER DETAILS
B7–6	DECK DRAINS – TYPES D–1 AND D–2
B7–8	DECK DRAINAGE DETAILS
B7–10	UTILITY OPENING – BOX GIRDER
B8–5	CAST–IN–PLACE PRESTRESSED GIRDER DETAILS
B11–52	CHAIN LINK RAILING TYPE 7
B11–54	CONCRETE BARRIER TYPE 26
B11–55	CONCRETE BARRIER TYPE 732
B14–3	COMMUNICATION AND SPRINKLER CONTROL CONDUITS (CONDUIT LESS THAN 4")
B14–5	WATER SUPPLY LINE (DETAILS) (PIPE SIZES LESS THAN 4")
ES–9A	ELECTRICAL SYSTEMS (ELECTRICAL DETAILS, STRUCTURE INSTALLATIONS)
ES–9B	ELECTRICAL SYSTEMS (ELECTRICAL DETAILS, STRUCTURE INSTALLATIONS)
ES–9C	ELECTRICAL SYSTEMS (ELECTRICAL DETAILS, STRUCTURE INSTALLATIONS)
ES–9D	ELECTRICAL SYSTEMS (ELECTRICAL DETAILS, STRUCTURE INSTALLATIONS)
ES–9E	ELECTRICAL SYSTEMS (ELECTRICAL DETAILS, STRUCTURE INSTALLATIONS)
ES–9F	ELECTRICAL SYSTEMS (FLUSH SOFFIT LUMINAIRE MODIFICATION DETAILS, STRUCTURE INSTALLATIONS)

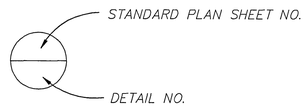

ABBREVIATIONS

INFO	INFORMATION
UNO	UNLESS NOTED OTHERWISE
T/R	TOP OF RAIL

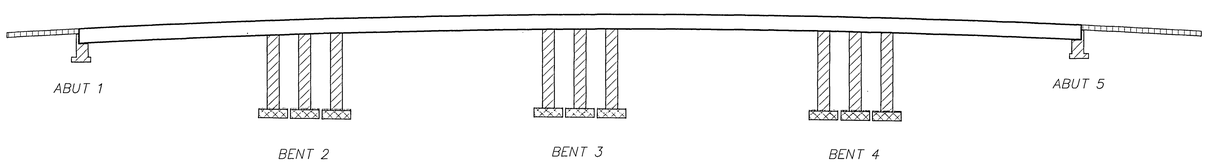

STRUCTURE CONCRETE BRIDGE
(f'c PER PRESTRESSING NOTES ON "GIRDER DETAILS NO. 1" SHEET)

STRUCTURAL CONCRETE, BRIDGE (4,000 PSI @ 28 DAYS)

STRUCTURAL CONCRETE, BRIDGE FOOTING

STRUCTURAL CONCRETE, APPROACH SLAB

CONCRETE STRENGTH & TYPE LIMITS

NO SCALE

AS BUILT
DATE 9-14-10

DMJM HARRIS | AECOM
800 NORTH HAVEN, SUITE 410
ONTARIO, CA 91764
T (909)291–8150 F (909)291–8166

REGISTERED PROFESSIONAL ENGINEER
LIMIN HE
No. 55635
Exp. 12-31-08
CIVIL
STATE OF CALIFORNIA

MARK	REVISIONS	APPR.	DATE

DESIGNED BY LH DRAWN BY LR CHECKED BY MW

COLUMBIA AVENUE OVERPASS AT BNSF RAILROAD

GENERAL NOTES & INDEX TO PLANS

SCALE: AS SHOWN

ACCT. NO.
R-4036
S-02
SHEET 46 OF 103
BRIDGE # 56C0572

DWG: P:\60004223 Columbia Grade Sep\CADD\Struct\Sheet\BRIDGE\ST-02.dwg
TIME: 7-15-08 – 7:23am User: LandaoE XRef Files: xbdr-bridge.dwg

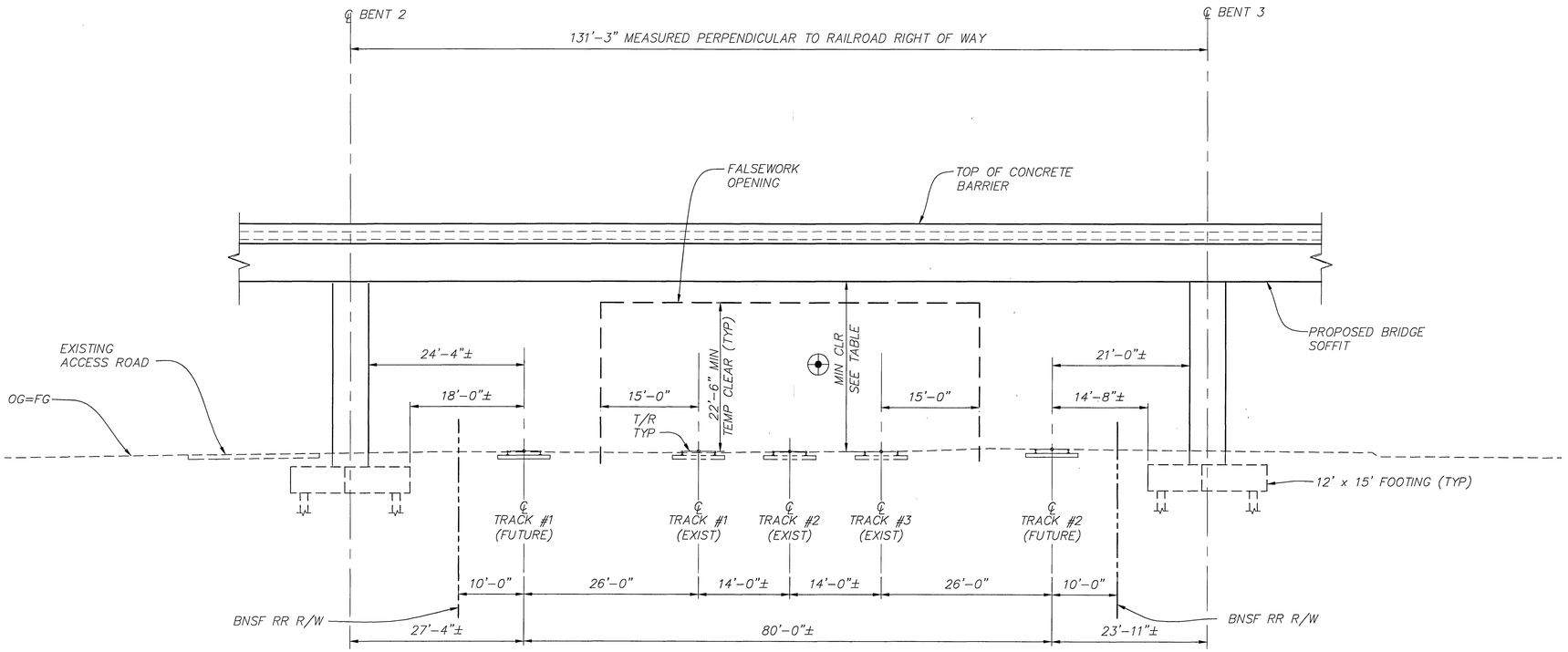

PART ELEVATION

1" = 10'

LEGEND:

T/R TOP OF RAIL

NOTES:

1. ALL DIMENSIONS SHOWN ARE NORMAL TO ℄ TRACKS.
2. T/R ELEVATIONS ARE BASED ON FIELD SURVEY DATA BY SUN MAPS FEBRUARY 2006
3. TOP OF RAIL ELEVATION FOR FUTURE TRACK # 1 & 2 ARE ASSUMED TO BE THE SAME AS EXISTING TRACK # 1 & 3 RESPECTIVELY.

⊕ FINAL MINIMUM VERTICAL CLEARANCE AT RAILROAD

LOCATION	ELEV AT PROPOSED BRIDGE SOFFIT	ELEV TOP OF RAIL	FINAL CLEARANCE FT, INCHES
TRACK #1	925.27	898.74	26'-6"
TRACK #2	925.46	898.74	26'-8"
TRACK #3	925.60	898.82	26'-9"
FUTURE TRACK #1	924.80	898.74	26'-0"
FUTURE TRACK #2	925.60	898.82	26'-9"

AS BUILT
DATE 9-14-10

DMJM HARRIS | AECOM
800 NORTH HAVEN, SUITE 410
ONTARIO, CA 91764
T (909)291-8150 F (909)291-8166

REGISTERED PROFESSIONAL ENGINEER
LIMIN HE
No. 55635
Exp. 12-31-08
CIVIL
STATE OF CALIFORNIA

MARK	REVISIONS	APPR.	DATE

DESIGNED BY LH DRAWN BY LR CHECKED BY MW

COLUMBIA AVENUE OVERPASS AT BNSF RAILROAD

PART STRUCTURE
ELEVATION AT BNSF RR

SCALE: 1"=10'

ACCT. NO.
R-4036
S-03
SHEET 47 OF 103
BRIDGE # 56C0572

DWG: P:\60004223 Columbia Grade Sep\CADD\Struct\Sheet\BRIDGE\ST-03.dwg
TIME: 7-15-08 – 7:24am User: LandaseE XRef Files: xbdr-bridge.dwg X-BRIDGE-COLUMBIA-S.dwg

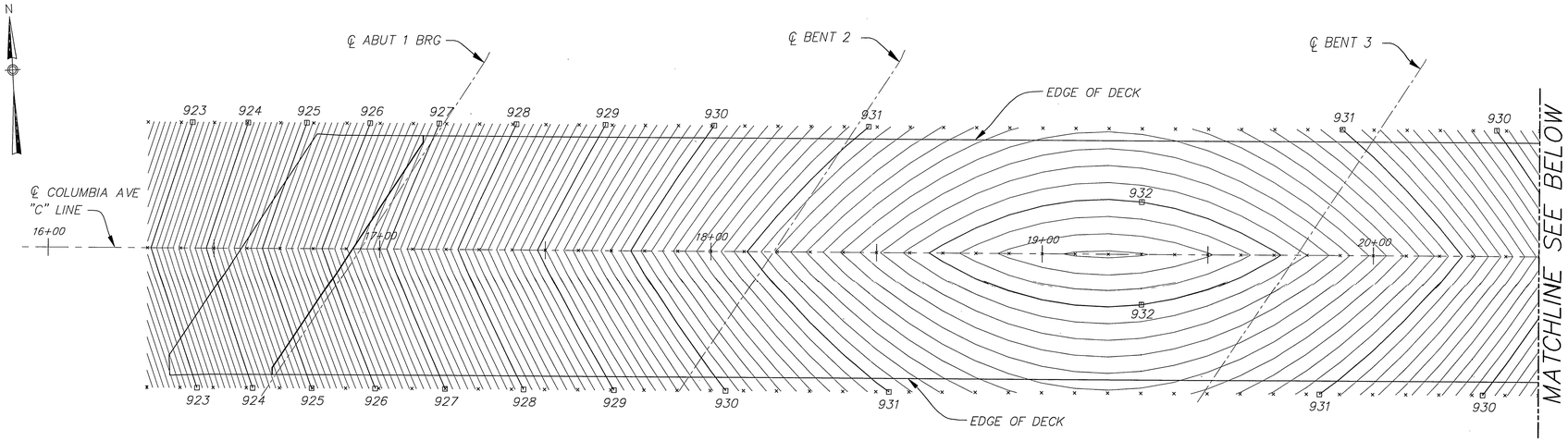

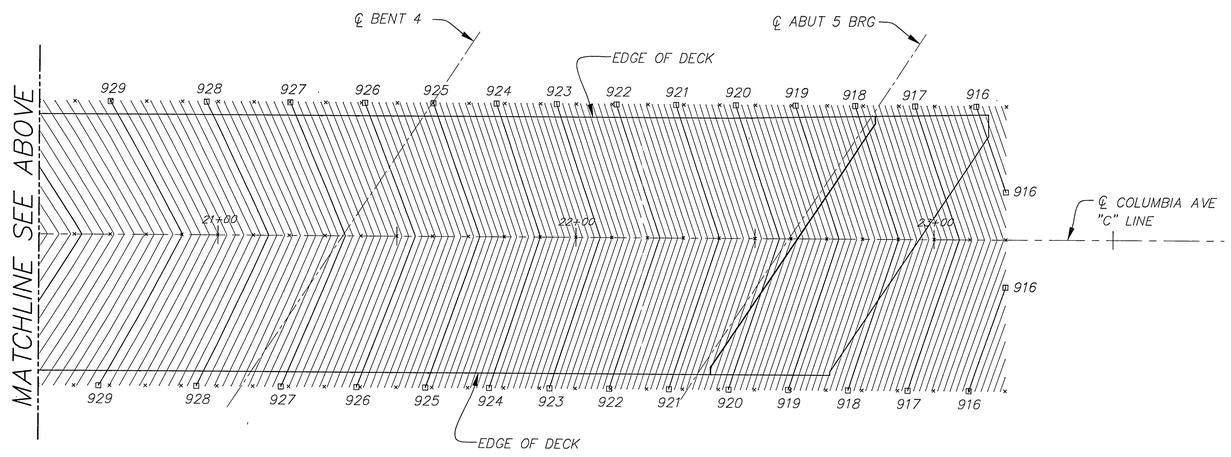

NOTES:

- □ INDICATES EVEN FOOT CONTOURS
- × INDICATES 10' INTERVALS MEASURED ALONG ℄ COLUMBIA AVE
- CONTOURS INTERVAL IS 0.10 FT
- CONTOURS DO NOT INCLUDE CAMBER

PLAN

1" = 20'-0"

AS BUILT

DATE 9-14-10

20' 10' 0 20' 40'

GRAPHIC SCALE: 1" = 20' HORIZ

DMJM HARRIS | AECOM
800 NORTH HAVEN, SUITE 410
ONTARIO, CA 91764
T (909)291-8150 F (909)291-8166

REGISTERED PROFESSIONAL ENGINEER
LIMAN HE
No. 55635
Exp. 12-31-08
CIVIL
STATE OF CALIFORNIA

MARK	REVISIONS	APPR.	DATE

DESIGNED BY LH DRAWN BY LR CHECKED BY MW

COLUMBIA AVENUE OVERPASS AT BNSF RAILROAD

DECK CONTOURS

SCALE: 1"=20'

ACCT. NO.

R-4036

S-04

SHEET 48 OF 103

BRIDGE # 56C0572

DWG: P:\60004223 Columbia Grade Sep\CADD\Struct\Sheet\BRIDGE\ST-04.dwg P:\60004223 Columbia Grade Sep\CADD\Struct\Ref\X-BRIDGE-COLUMBIA-S.dwg P:\60004223 Columbia Grade Sep\CADD\Struct\Ref\xbdr-bridge.dwg
TIME: 7-15-08 - 7:24am User: LandaseE XRef Files: P:\60004223 Columbia Grade Sep\CADD\Struct\Ref\x-deckcontour.dwg P:\60004223 Columbia Grade Sep\CADD\Struct\Ref\xbdr-bridge.dwg

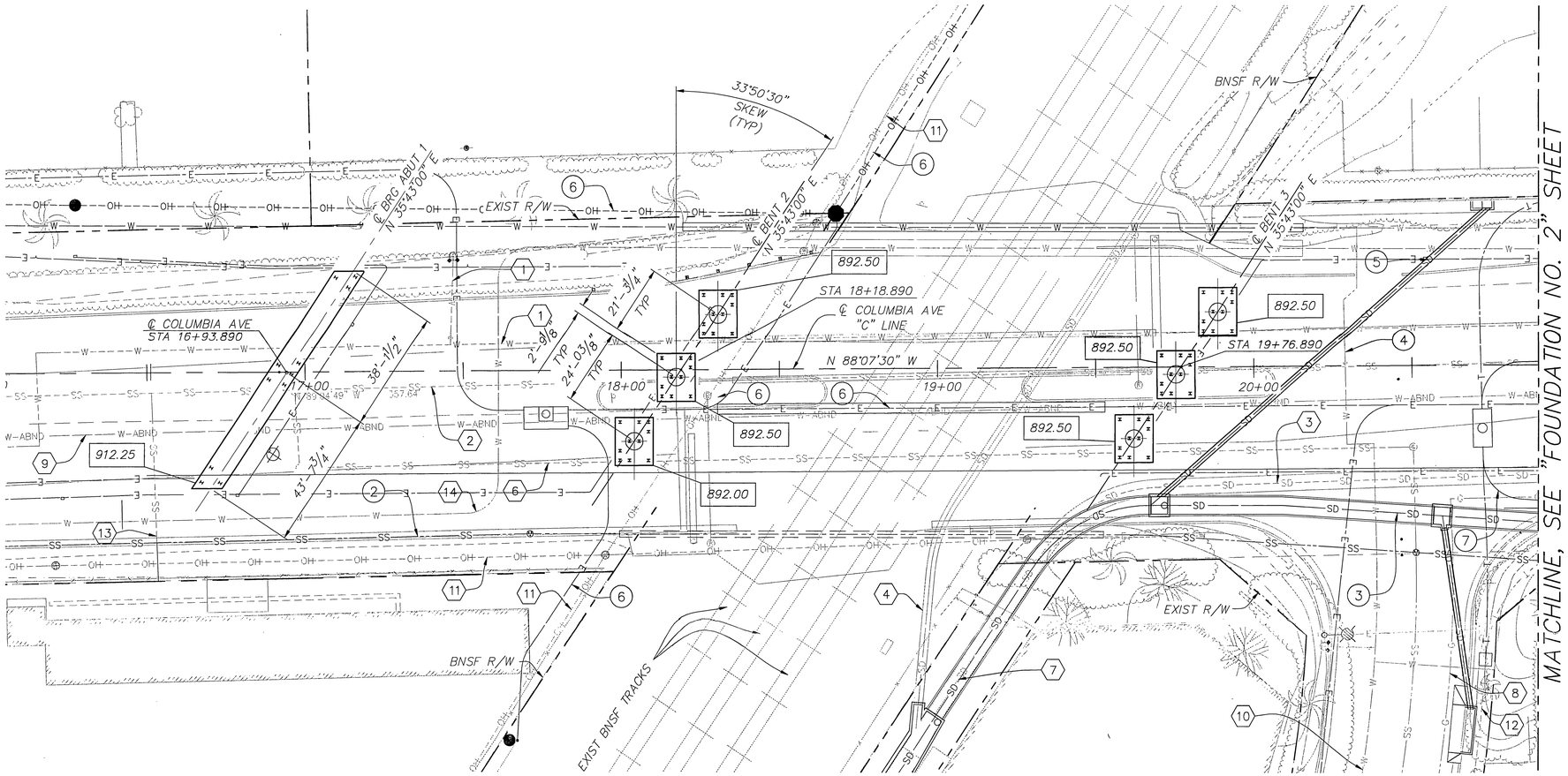

PLAN

1" =20'-0"

EXISTING UTILITIES:

1. 12" WATER, CITY OF RIVERSIDE (TO BE ABANDONED)
2. 10" SEWER, CITY OF RIVERSIDE (TO BE ABANDONED)
3. 60" RCP STORM DRAIN, COUNTY OF RIVERSIDE (TO BE ABANDONED)
4. 33" STORM DRAIN, COUNTY OF RIVERSIDE
5. 4" GAS, SCG (TO BE RELOCATED)
6. 8" SEWER, CITY OF RIVERSIDE (TO BE RELOCATED)
7. 60" STORM DRAIN, COUNTY OF RIVERSIDE (TO BE REMOVED)
8. 2" GAS, SCG
9. 24" WATER, CITY OF RIVERSIDE (ABANDONED)
10. 12" WATER, CITY OF RIVERSIDE
11. OVERHEAD ELECTRICAL, CITY OF RIVERSIDE
12. 3-4" TELEPHONE, AT&T
13. 8" SEWER, CITY OF RIVERSIDE (TO BE REMOVED)
14. 48" WATER, CITY OF RIVERSIDE

NEW UTILITIES:

1. 4" GAS, SCG
2. 12" SEWER, CITY OF RIVERSIDE
3. 66" RCP STORM DRAIN, COUNTY OF RIVERSIDE
4. 12" WATER, CITY OF RIVERSIDE
5. 18" STORM DRAIN, COUNTY OF RIVERSIDE
6. ELECTRICAL LINE, CITY OF RIVERSIDE
7. TELEPHONE LINE, AT & T

NOTES:

1. ALL PILES ARE NOT SHOWN FOR CLARITY.
2. THE CONTRACTOR SHALL VERIFY THE LOCATION OF EXISTING UTILITIES BEFORE PILE DRIVING.
3. FOR MSE WALL LAYOUT, SEE WALL PLANS.
4. FOR PILE DATA, SEE "FOUNDATION PLAN NO. 2" SHEET.
5. FOR STEEL PILE ANCHOR DETAIL, SEE "ABUTMENT DETAILS NO. 3" SHEET.

LEGEND:

892.50 INDICATES BOTTOM OF FOOTING ELEVATION

AS BUILT
DATE 9-14-10

20' 10' 0 20' 40'
GRAPHIC SCALE: 1" = 20' HORIZ

DMJM HARRIS | AECOM
800 NORTH HAVEN, SUITE 410
ONTARIO, CA 91764
T (909)291-8150 F (909)291-8166

REGISTERED PROFESSIONAL ENGINEER
LAWRENCE HE
No. 55635
Exp. 12-31-08
CIVIL
STATE OF CALIFORNIA

MARK	REVISIONS	APPR.	DATE

DESIGNED BY LH DRAWN BY LR CHECKED BY MW

COLUMBIA AVENUE OVERPASS AT BNSF RAILROAD

FOUNDATION PLAN NO. 1

SCALE: AS SHOWN

ACCT. NO.
R-4036
S-05
SHEET 49 OF 103
BRIDGE # 56C0572

DWG: P:\60004223 Columbia Grade Sep\CADD\Struct\Sheet\BRIDGE\ST-05.dwg
TIME: 7-15-08 - 7:24am User: LandaseE XRef Files: xbdr-bridge.dwg xrow_ex.dwg xtopo.dwg xutil_ex.dwg xutil_pro.dwg ..\..\ref\x-bridge-columbia-s.dwg

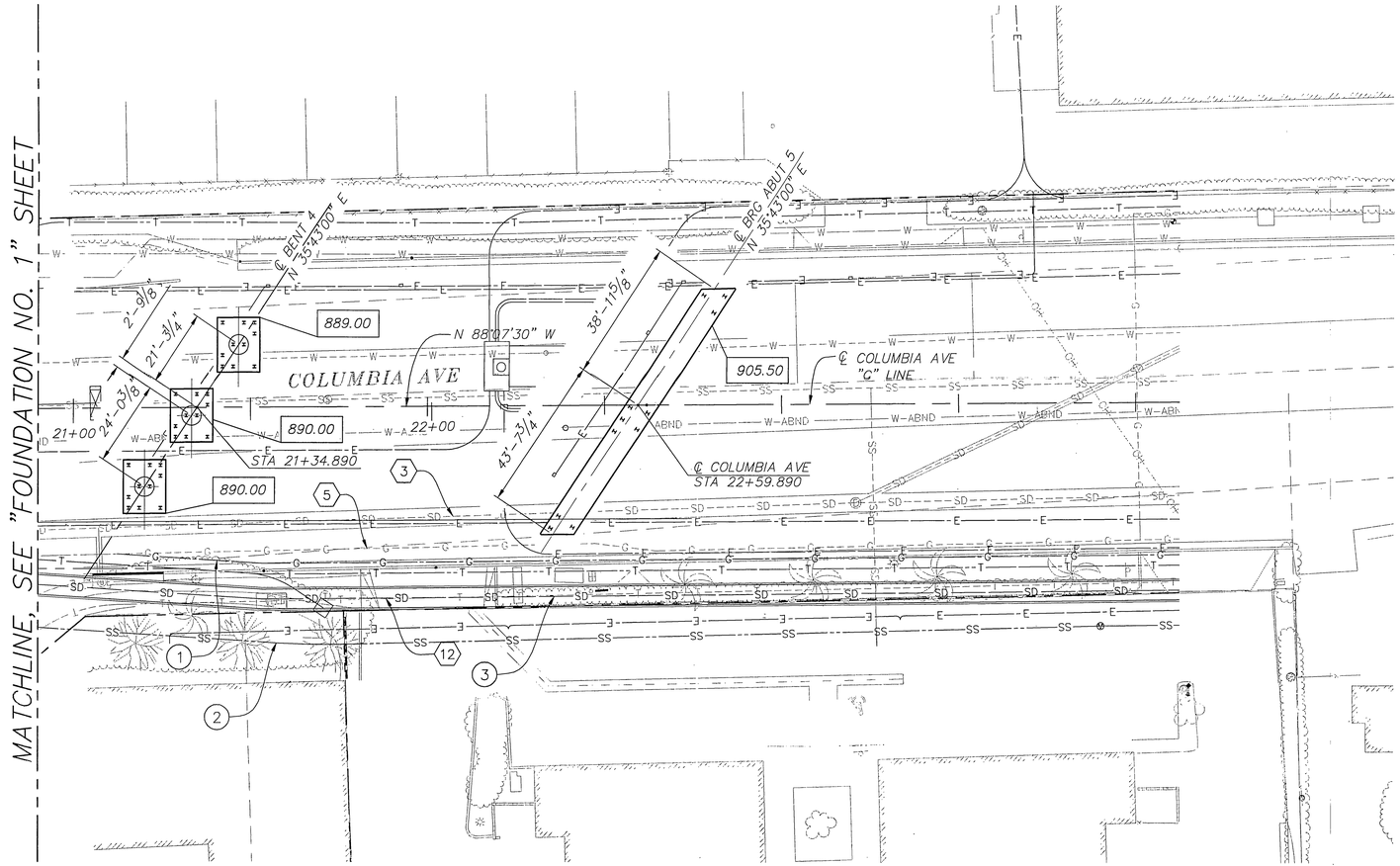

PLAN

1" =20'-0"

NOTE:

1. SEE NOTES AND LEGEND ON "FOUNDATION PLAN NO. 1' SHEET.

PILE DATA TABLE

LOCATION	PILE TYPE	DESIGN LOADING (SERVICE)	NOMINAL RESISTANCE		DESIGN TIP ELEV (FT) (NOTE 5)	SPECIFIED TIP ELEV (FT)
			COMPRESSION	TENSION		
ABUT 1	HP10X57	160 kips	320 kips *	0	850.00 (1), 880.00 (2)	850.00
BENT 2	HP10X57	120 kips	240 kips	0	850.00 (1), 860.00 (2)	850.00
BENT 3	HP10X57	120 kips	240 kips	0	852.00 (1), 860.00 (2)	852.00
BENT 4	HP10X57	120 kips	240 kips	0	854.00 (1), 860.00 (2)	854.00
ABUT 5	HP10X57	160 kips	320 kips *	0	854.00 (1), 876.00 (2)	854.00

DESIGN TIP ELEVATION IS CONTROLLED BY THE FOLLOWING DEMANDS:
(1) COMPRESSION, (2) TENSION, AND (3) LATERAL DEMANDS

"*" NOMINAL RESISTANCE (COMPRESSION) INCLUDE A 50 KIP DOWNDRAG FORCE

AS BUILT
DATE 9-14-10

20' 10' 0 20' 40'
GRAPHIC SCALE: 1" = 20' HORIZ

DMJM HARRIS | AECOM
800 NORTH HAVEN, SUITE 410
ONTARIO, CA 91764
T (909)291-8150 F (909)291-8166

REGISTERED PROFESSIONAL ENGINEER
LIAN HE
No. 55635
Exp. 12-31-08
CIVIL
STATE OF CALIFORNIA

MARK	REVISIONS	APPR.	DATE

DESIGNED BY LH DRAWN BY LR CHECKED BY MW

COLUMBIA AVENUE OVERPASS AT BNSF RAILROAD

FOUNDATION PLAN NO. 2

SCALE: AS SHOWN

ACCT. NO.
R-4036
S-06
SHEET 50 OF 103
BRIDGE # 56C0572

DWG: P:\60004223 Columbia Grade Sep\CADD\Struct\Sheet\BRIDGE\ST-06.dwg
TIME: 7-15-08 - 7:24am User: LandaseE XRef Files: xbdr-bridge.dwg xrow_ex.dwg xtopo.dwg xutil_ex.dwg xutil_pro.dwg x-bridge-columbia-s.dwg

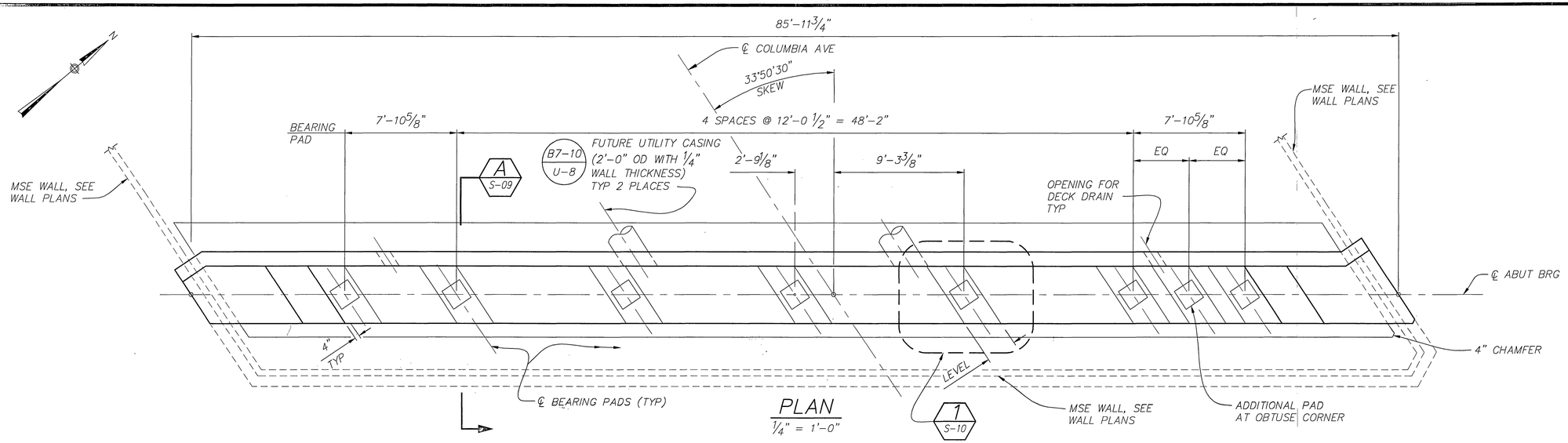

PLAN
1/4" = 1'-0"

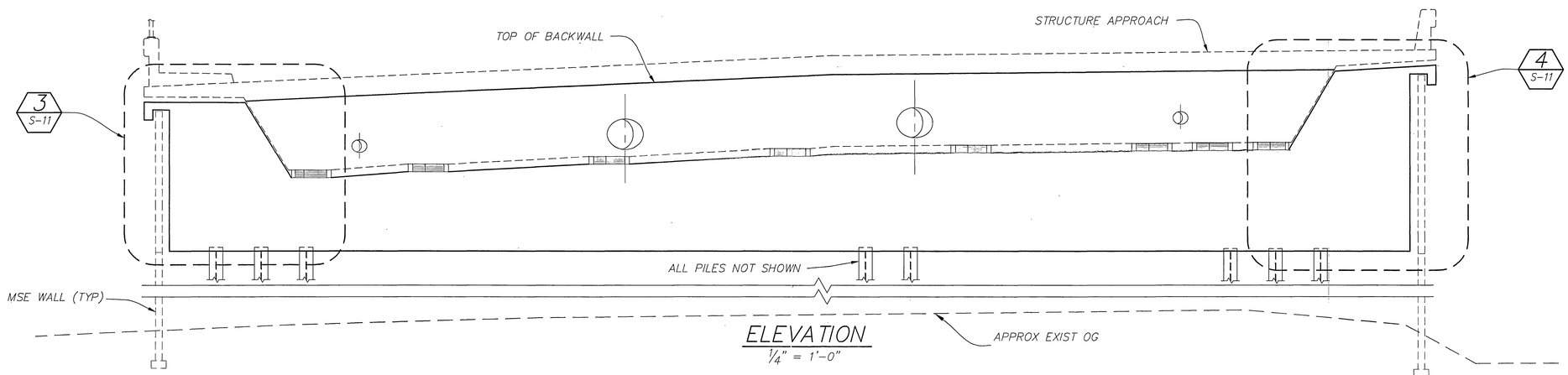

ELEVATION
1/4" = 1'-0"

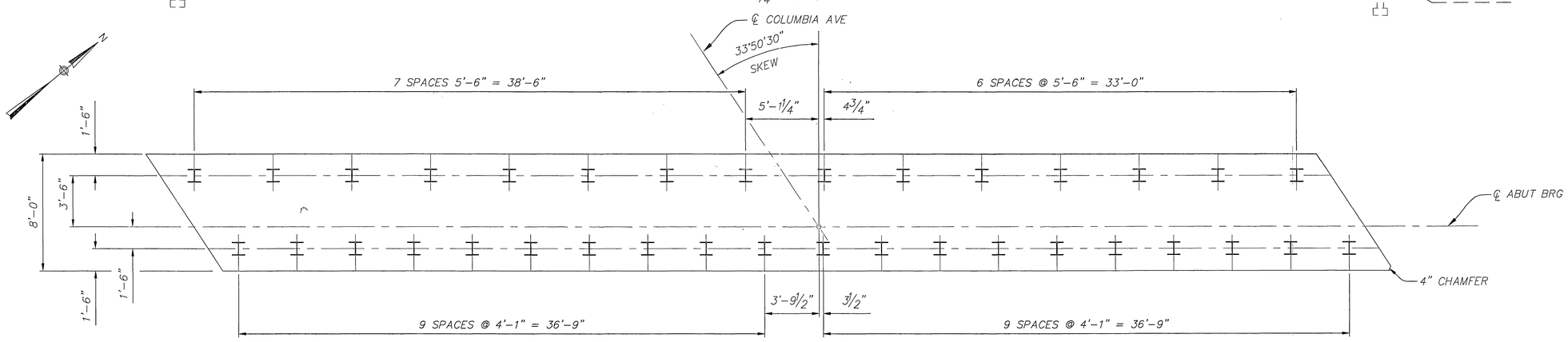

FOOTING PLAN
1/4" = 1'-0"

NOTES:

1. FOR PILE DATA, SEE "FOUNDATION PLAN NO. 2" SHEET.
2. FOR STEEL PILE ANCHORAGE DETAIL, SEE ABUTMENT DETAILS NO. 2" SHEET.
3. FOR MSE WALL DETAILS, SEE WALL PLANS.
4. UTILITY OPENINGS, SEE "TYPICAL SECTION" SHEET FOR SIZE AND LOCATION.

LEGEND:

I VERTICAL HP STEEL PILE

AS BUILT
DATE 9-14-10

DMJM HARRIS | AECOM
800 NORTH HAVEN, SUITE 410
ONTARIO, CA 91764
T (909)291-8150 F (909)291-8166

REGISTERED PROFESSIONAL ENGINEER
LIAN HE
No. 55635
Exp. 12-31-08
CIVIL
STATE OF CALIFORNIA

MARK	REVISIONS	APPR.	DATE

DESIGNED BY JL DRAWN BY LR/EL CHECKED BY CW

COLUMBIA AVENUE OVERPASS AT BNSF RAILROAD

ABUTMENT 1 LAYOUT

SCALE: AS SHOWN

ACCT. NO.
R-4036
S-07
SHEET 51 OF 103
BRIDGE # 56C0572

DWG: P:\60004223 Columbia Grade Sep\CADD\Struct\Sheet\BRIDGE\ST-07.dwg
TIME: 7-15-08 - 4:38pm User: LandosE XRef Files: xbdr-bridge.dwg X-GIRDERLAY.dwg X-Abutdetails.dwg

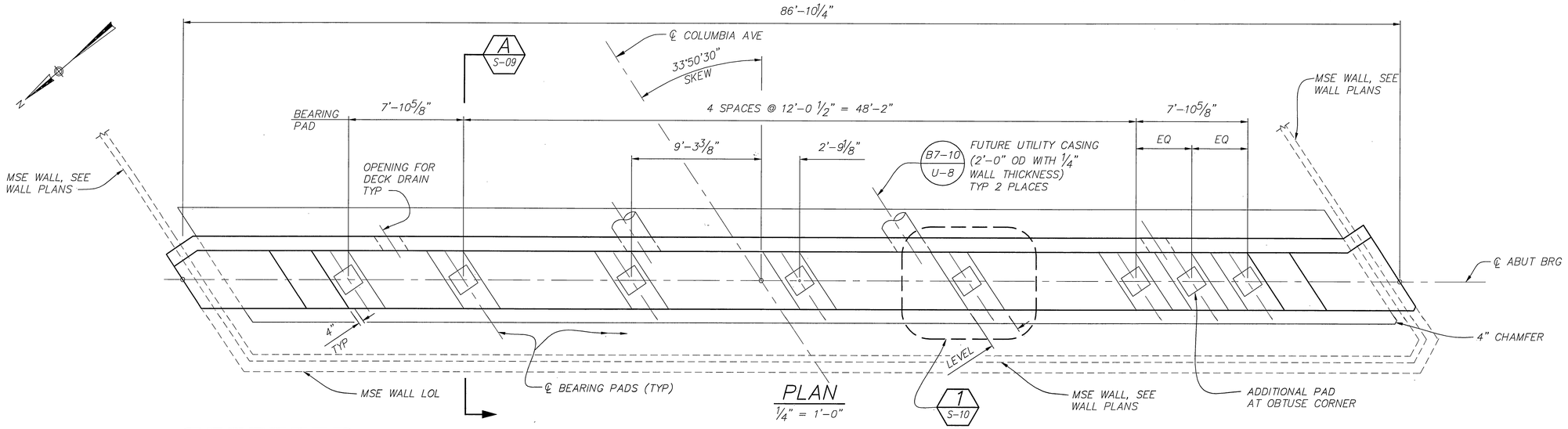

PLAN
1/4" = 1'-0"

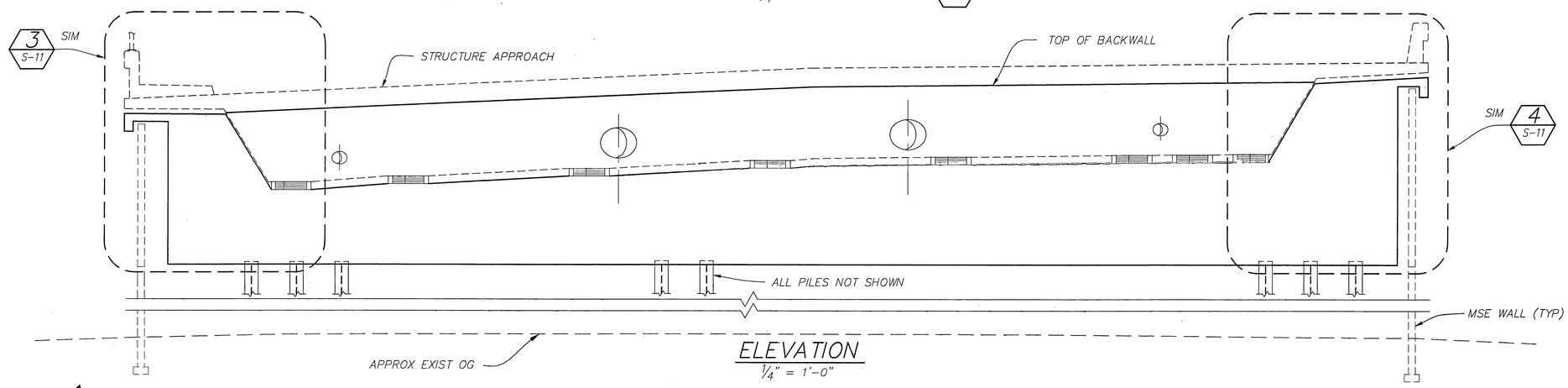

ELEVATION
1/4" = 1'-0"

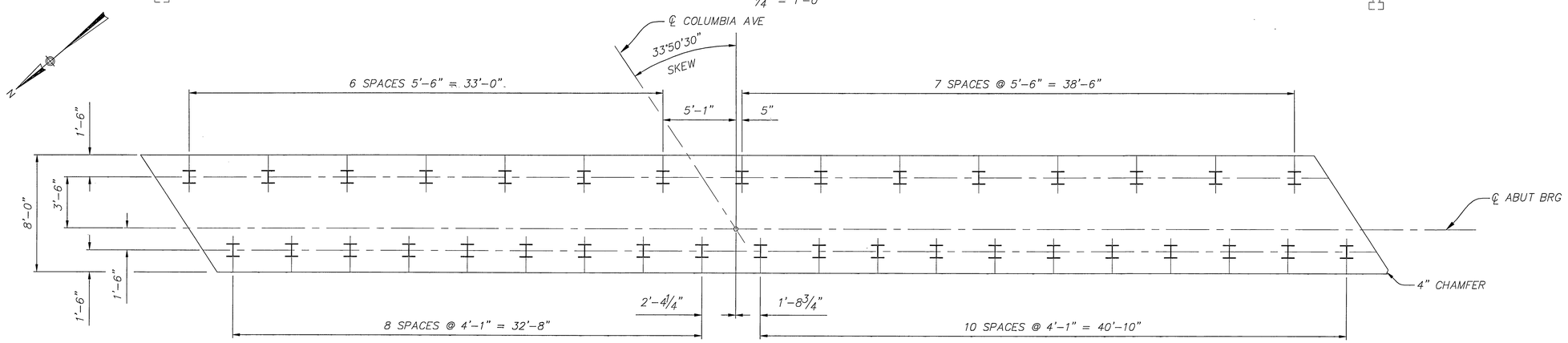

FOOTING PLAN
1/4" = 1'-0"

NOTES:

1. FOR PILE DATA, SEE "FOUNDATION PLAN NO. 2" SHEET.
2. FOR STEEL PILE ANCHORAGE DETAIL, SEE ABUTMENT DETAILS NO. 2" SHEET.
3. FOR MSE WALL DETAILS, SEE WALL PLANS.
4. UTILITY OPENINGS, SEE "TYPICAL SECTION" SHEET FOR SIZE AND LOCATION.

LEGEND:

I VERTICAL HP STEEL PILE

AS BUILT
DATE 9-14-10

DMJM HARRIS | AECOM
800 NORTH HAVEN, SUITE 410
ONTARIO, CA 91764
T (909)291-8150 F (909)291-8166

REGISTERED PROFESSIONAL ENGINEER
LIAN HE
No. 55635
Exp. 12-31-08
CIVIL
STATE OF CALIFORNIA

MARK	REVISIONS	APPR.	DATE

DESIGNED BY JL DRAWN BY EL CHECKED BY CW

COLUMBIA AVENUE OVERPASS AT BNSF RAILROAD

ABUTMENT 5 LAYOUT

SCALE: AS SHOWN

ACCT. NO.
R-4036
S-08
SHEET 52 OF 103
BRIDGE # 56C0572

DWG: P:\60004223 Columbia Grade Sep\CADD\Struct\Sheet\BRIDGE\ST-08.dwg
TIME: 7-15-08 - 4:39pm User: LandaseE XRef Files: xbdr-bridge.dwg X-GIRDERLAY.dwg X-Abutdetails.dwg

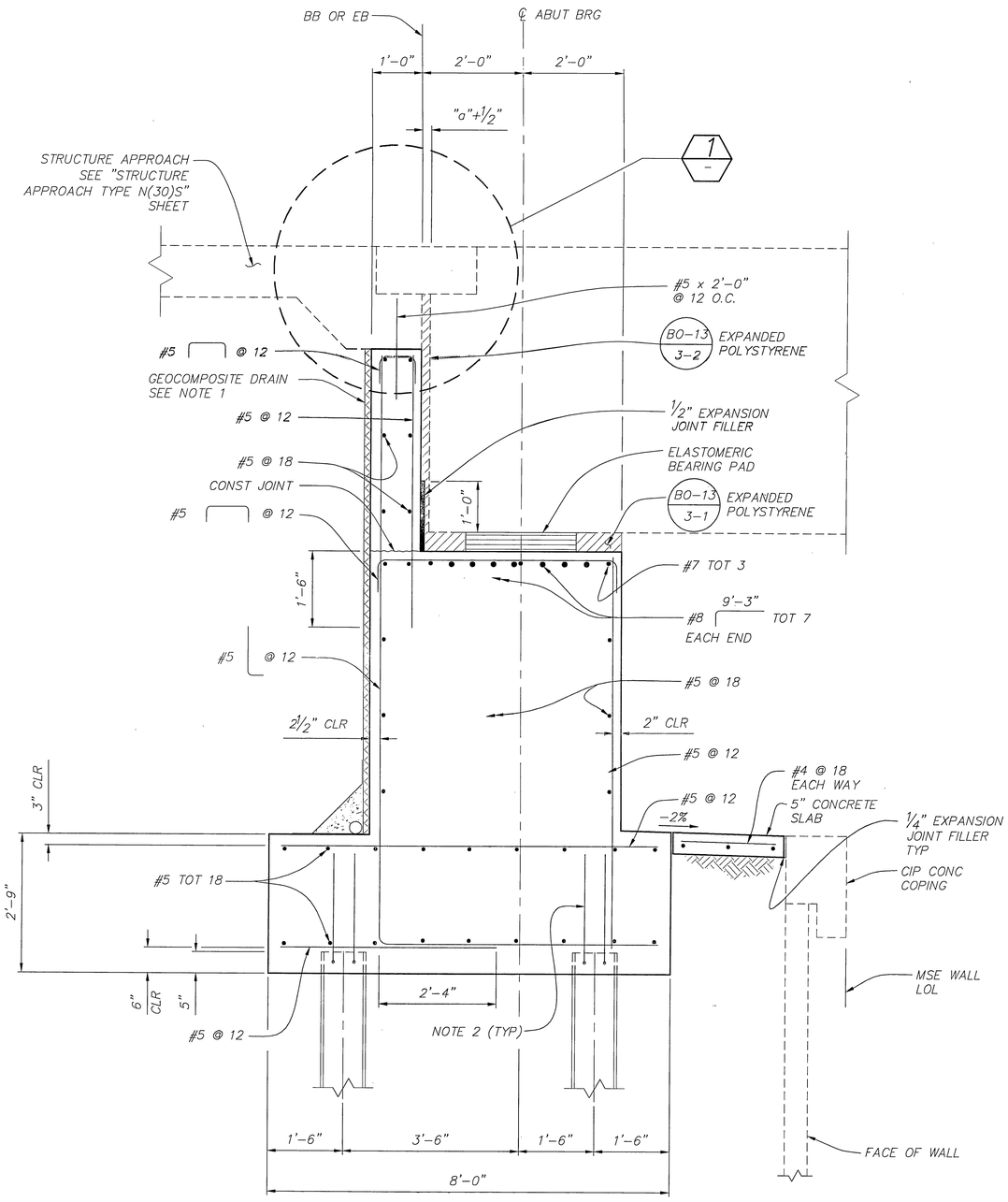

SECTION A
3/4" = 1'-0" S-07

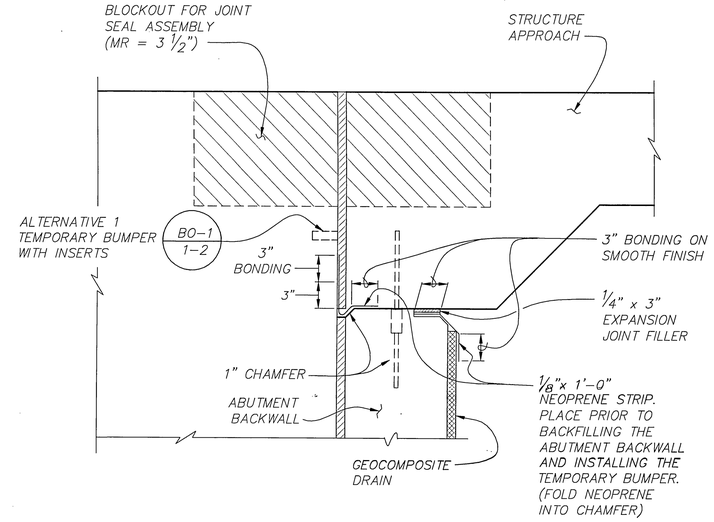

JOINT PROTECTION DETAIL 1
NO SCALE

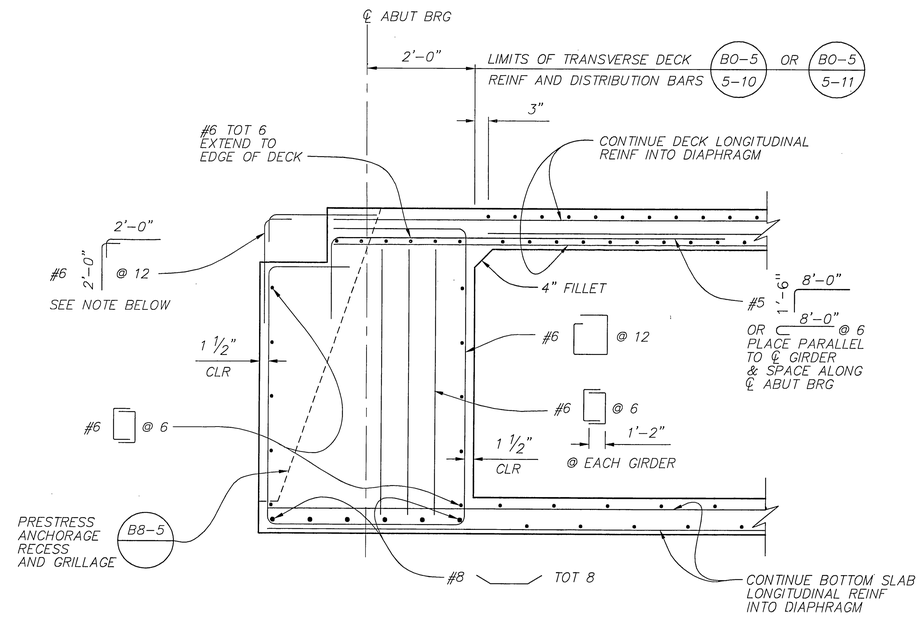

END DIAPHRAGM DETAIL
3/4" = 1'-0"

NOTES:

1. FOR DRAINAGE DETAILS, SEE "STRUCTURE APPROACH DRAINAGE DETAILS" SHEET.
2. FOR STEEL PILE ANCHOR DETAIL, SEE "ABUTMENT DETAILS NO. 2" SHEET.
3. FOR "a" DIMENSION, SEE "JOINT SEAL ASSEMBLY" SHEET.
4. FOR MSE WALL DETAILS, SEE "MSE WALL NO. 1" AND "MSE WALL NO. 2" PLANS.

NOTE: REINFORCING BARS MAY BE ADJUSTED AS NECESSARY TO ACCOMMODATE INSTALLATION OF THE JOINT SEAL ASSEMBLY UPON APPROVAL OF THE JOINT SEAL SHOP DRAWINGS AND AS DIRCTED BY ENGINEER.

AS BUILT
DATE 9-14-10

DMJM HARRIS | AECOM
800 NORTH HAVEN, SUITE 410
ONTARIO, CA 91764
T (909)291-8150 F (909)291-8166

REGISTERED PROFESSIONAL ENGINEER
LAWN THE
No. 55635
Exp. 12-31-08
CIVIL
STATE OF CALIFORNIA

MARK	REVISIONS	APPR.	DATE

DESIGNED BY JL DRAWN BY LR CHECKED BY CW

COLUMBIA AVENUE OVERPASS AT BNSF RAILROAD

ABUTMENT DETAILS NO. 1

SCALE: AS SHOWN

ACCT. NO.
R-4036
S-09
SHEET 53 OF 103
BRIDGE # 56C0572

DWG: P:\60004223 Columbia Grade Sep\CADD\Struct\Sheet\BRIDGE\ST-09.dwg
TIME: 7-15-08 - 7:24am User: LandosE XRef Files: xbdr-bridge.dwg X-Abutdetails.dwg

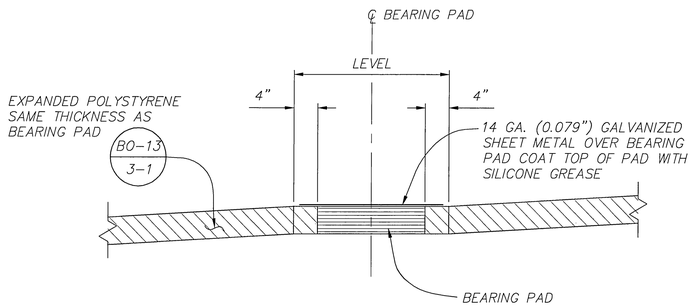

SECTION B
1" = 1'-0"

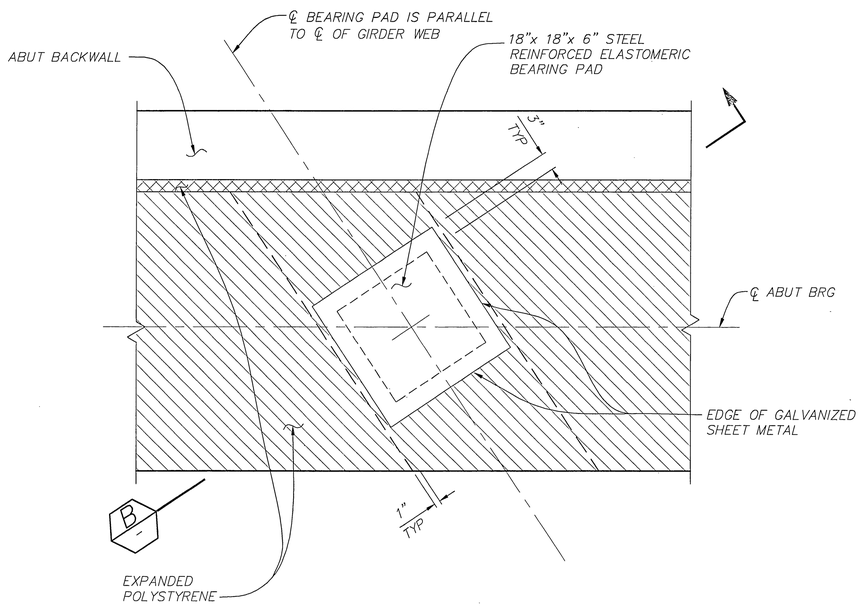

BEARING PAD DETAIL 1 S-07
1' = 1'-0"

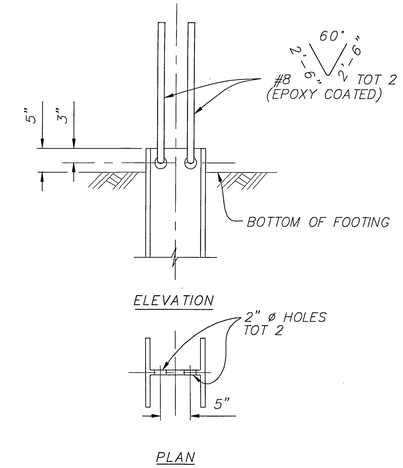

STEEL PILE ANCHORAGE DETAIL

AS BUILT
DATE 9-14-10

DMJM HARRIS | AECOM
800 NORTH HAVEN, SUITE 410
ONTARIO, CA 91764
T (909)291-8150 F (909)291-8166

REGISTERED PROFESSIONAL ENGINEER
LAWRENCE
No. 55635
Exp. 12-31-08
CIVIL
STATE OF CALIFORNIA

MARK	REVISIONS	APPR.	DATE

DESIGNED BY JL DRAWN BY LR CHECKED BY CW

COLUMBIA AVENUE OVERPASS AT BNSF RAILROAD

ABUTMENT DETAILS NO. 2

SCALE: AS SHOWN

ACCT. NO.
R-4036
S-10
SHEET 54 OF 103
BRIDGE # SGC0572

DWG: P:\60004223 Columbia Grade Sep\CADD\Struct\Sheet\BRIDGE\ST-10.dwg
TIME: 7-15-08 - 7:26am User: LandaSE XRef Files: xbdr-bridge.dwg X-Abutdetails.dwg

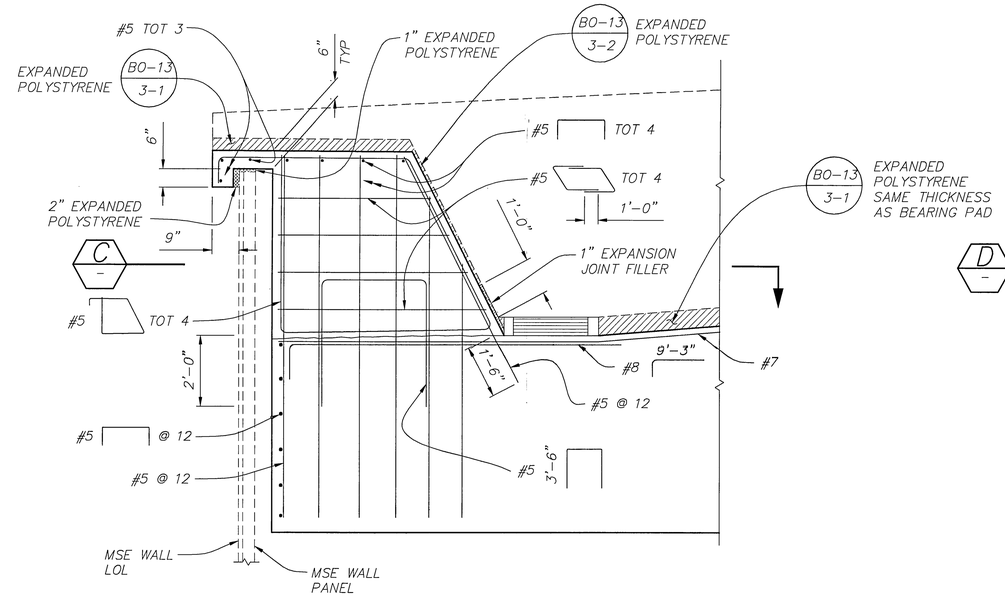

NOTE: TYPICAL ABUTMENT REINF AND PILES NOT SHOWN FOR CLARITY.

SHEAR KEY DETAIL NO. 1 (3 / S-07)

1/2" = 1'-0"

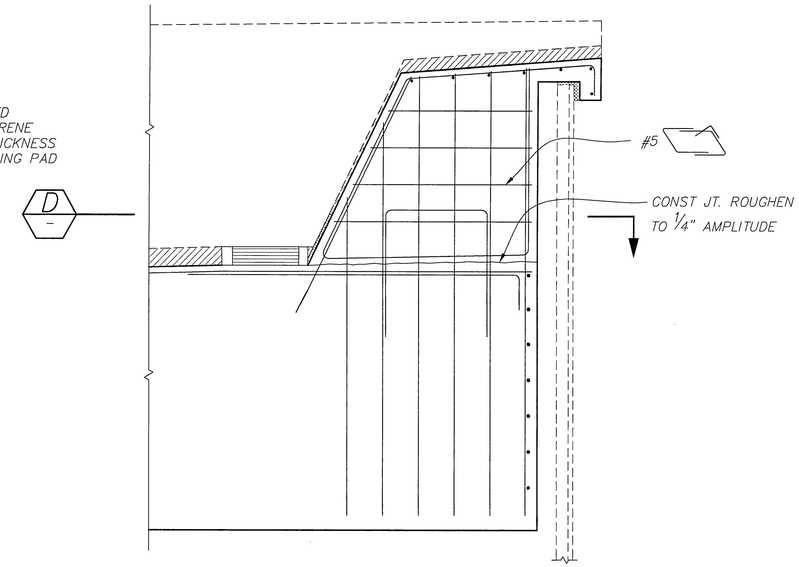

NOTE: FOR INFORMATION NOT SHOWN, SEE "SHEAR KEY DETAIL NO. 1" SHEET

SHEAR KEY DETAIL NO. 2 (4 / S-07)

1/2" = 1'-0"

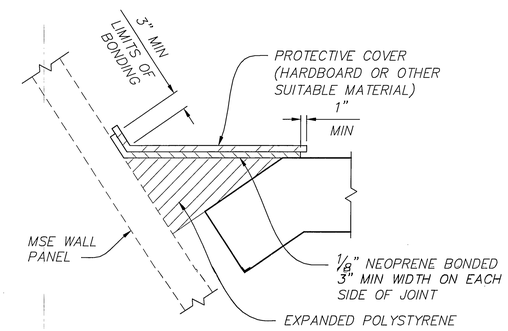

STRIP WATERSTOP DETAIL (1 / -)

1" = 1'-0"

NOTE: OBTUSE CORNER SHOWN, ACUTE CORNER SIMILAR

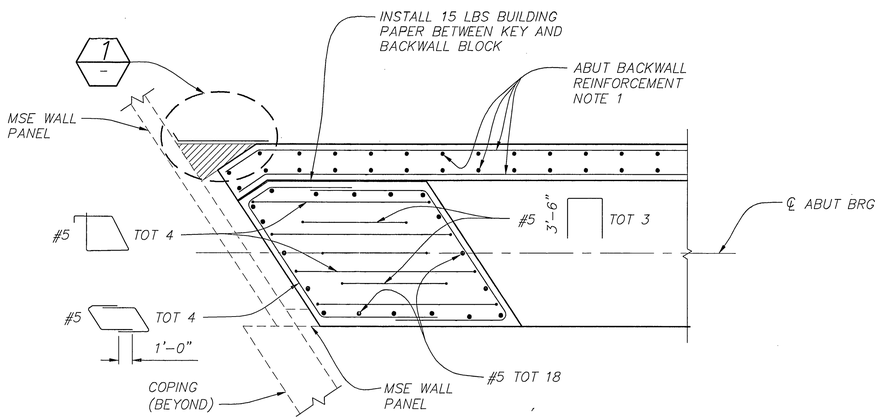

SECTION (C / -)

1/2" = 1'-0"

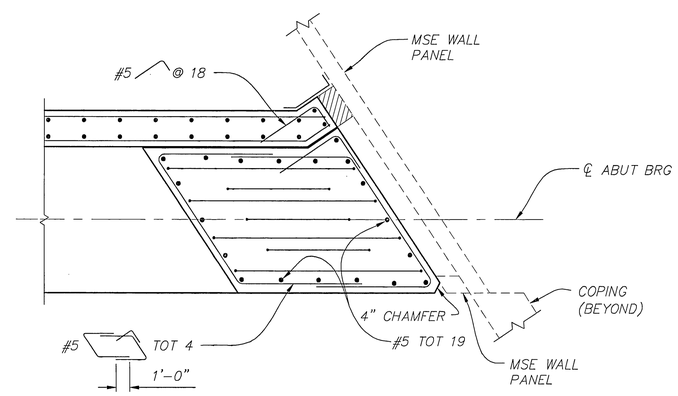

NOTE: FOR INFORMATION NOT SHOWN, SEE "SECTION C".

SECTION (D / -)

1/2" = 1'-0"

AS BUILT
DATE 9-14-10

DMJM HARRIS | AECOM
800 NORTH HAVEN, SUITE 410
ONTARIO, CA 91764
T (909)291-8150 F (909)291-8166

REGISTERED PROFESSIONAL ENGINEER
JOHN HE
No. 55635
Exp. 12-31-08
CIVIL
STATE OF CALIFORNIA

MARK	REVISIONS	APPR.	DATE

DESIGNED BY JL DRAWN BY LR CHECKED BY CW

COLUMBIA AVENUE OVERPASS AT BNSF RAILROAD

ABUTMENT DETAILS NO. 3

SCALE: AS SHOWN

ACCT. NO.

R-4036
S-11

SHEET 55 OF 103

BRIDGE # 56C0572

DWG: P:\60004223 Columbia Grade Sep\CADD\Struct\Sheet\BRIDGE\ST-11.dwg
TIME: 7-15-08 - 7:26am User: LandaSE XRef Files: xbar-bridge.dwg X-Abutdetails.dwg

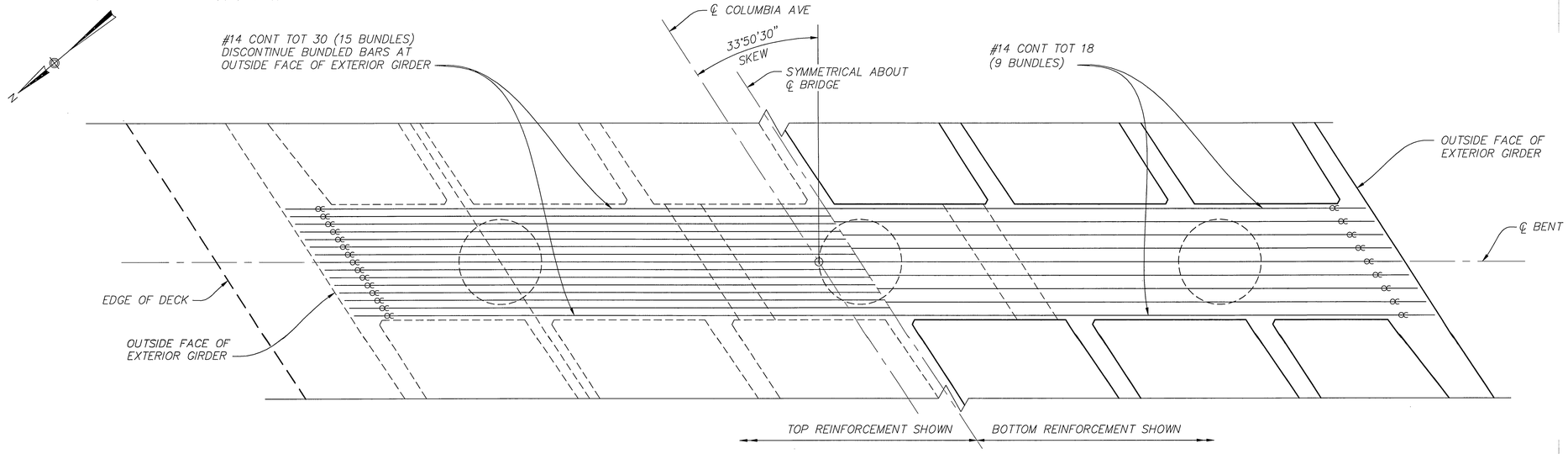

PLAN

1/4" = 1'-0"

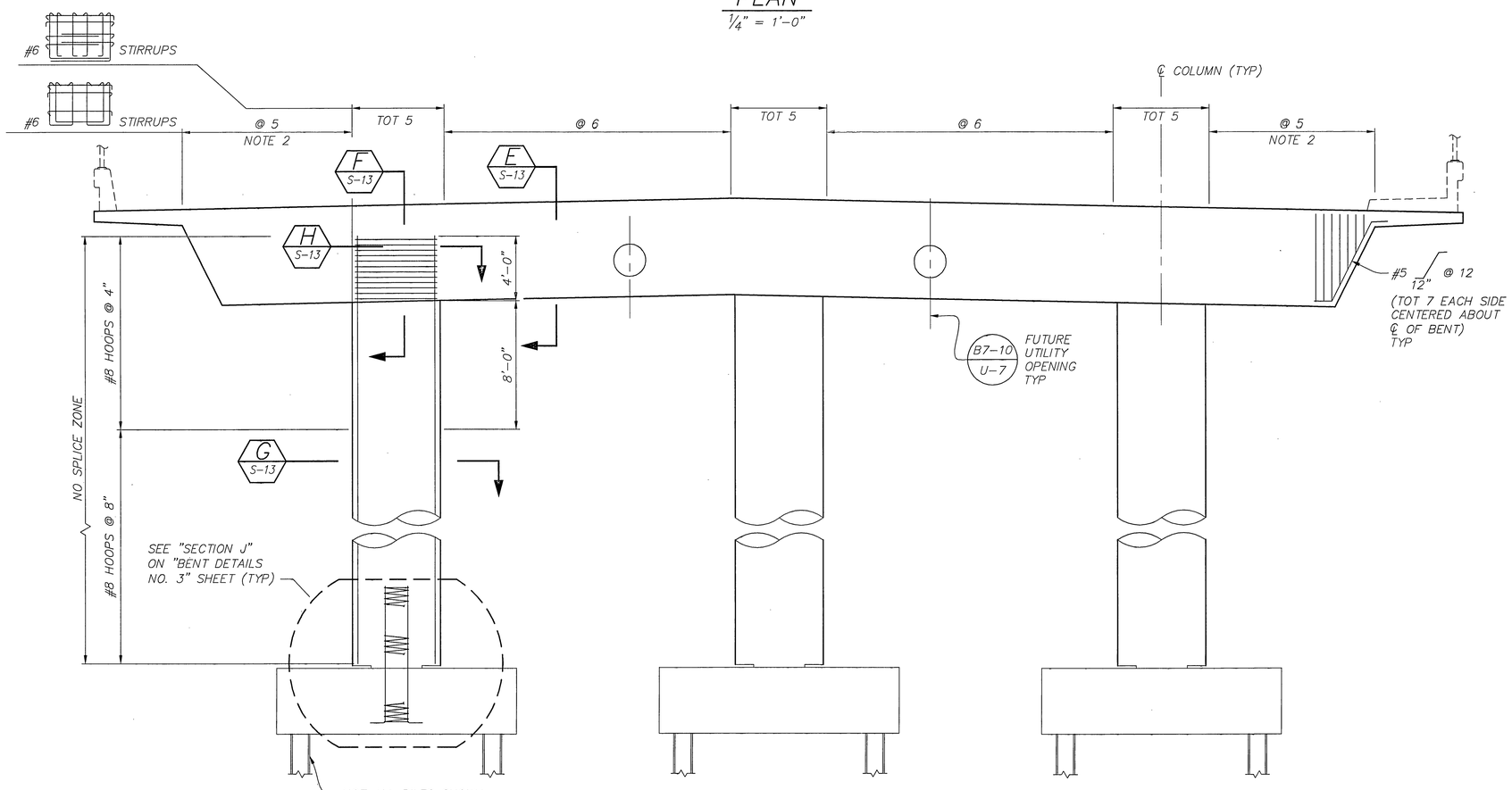

ELEVATION (NORMAL)

1/4" = 1'-0"

LEGEND:

∝ INDICATES BUNDLE BAR

NOTES:

1. FOR UTILITY OPENINGS LOCATION AND SIZE, SEE "TYPICAL SECTION" SHEET.
2. FOR CORNER CAP REINFORCEMENT, SEE "BENT DETAILS NO. 4" SHEET.

AS BUILT
DATE 9-14-10

DMJM HARRIS | AECOM
800 NORTH HAVEN, SUITE 410
ONTARIO, CA 91764
T (909)291-8150 F (909)291-8166

REGISTERED PROFESSIONAL ENGINEER
LIMIN HE
No. 55635
Exp. 12-31-08
CIVIL
STATE OF CALIFORNIA

MARK	REVISIONS	APPR.	DATE

DESIGNED BY LH DRAWN BY LR CHECKED BY MW

COLUMBIA AVENUE OVERPASS AT BNSF RAILROAD

BENT DETAILS NO. 1

SCALE: AS SHOWN

ACCT. NO.
R-4036
S-12
SHEET 56 OF 103
BRIDGE # 56C0572

DWG: P:\60004223 Columbia Grade Sep\CADD\Struct\Sheet\BRIDGE\ST-12.dwg
TIME: 7-15-08 - 4:39pm User: LandasE XRef Files: xbdr-bridge.dwg X-BENT.dwg

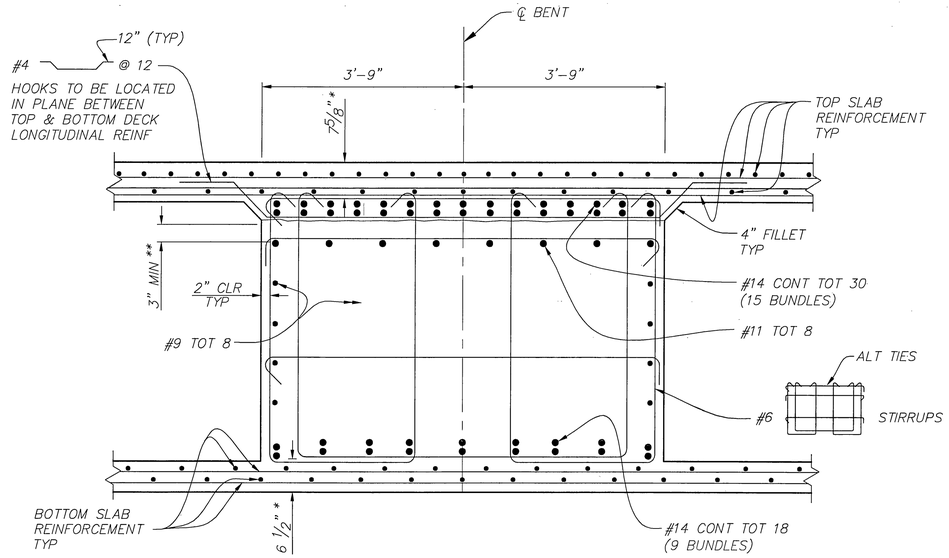

SECTION E
3/4" = 1'-0" S-12

* INDICATES CLEARANCE TO MAIN CAP REINFORCEMENT

** INDICATES CLEARANCE TO #11 TOT 8. REINFORCEMENT MAY BE LOWERED TO CLEAR PRESTRESS DUCTS; HOWEVER, THIS DIMENSION SHALL NOT EXCEED 1'-8" UNLESS APPROVED BY APPROVED BY THE ENGINEER.

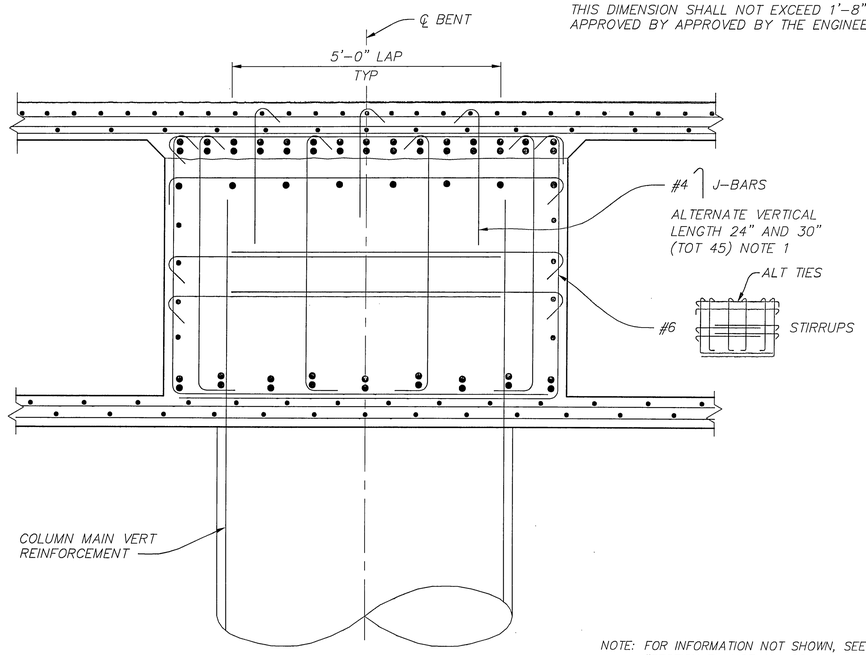

NOTE: FOR INFORMATION NOT SHOWN, SEE "SECTION E". NOT ALL COLUMN REINF SHOWN FOR CLARITY.

SECTION F
3/4" = 1'-0" S-12

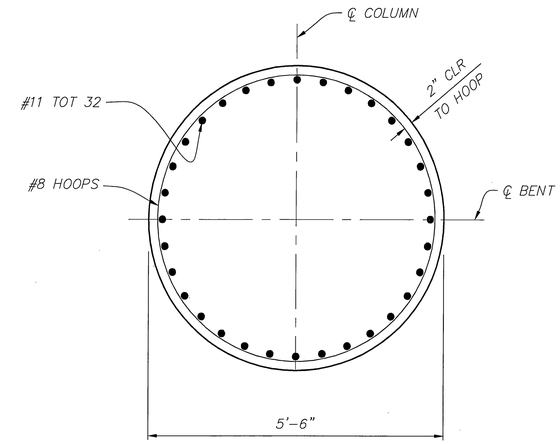

SECTION G
3/4" = 1'-0" S-12

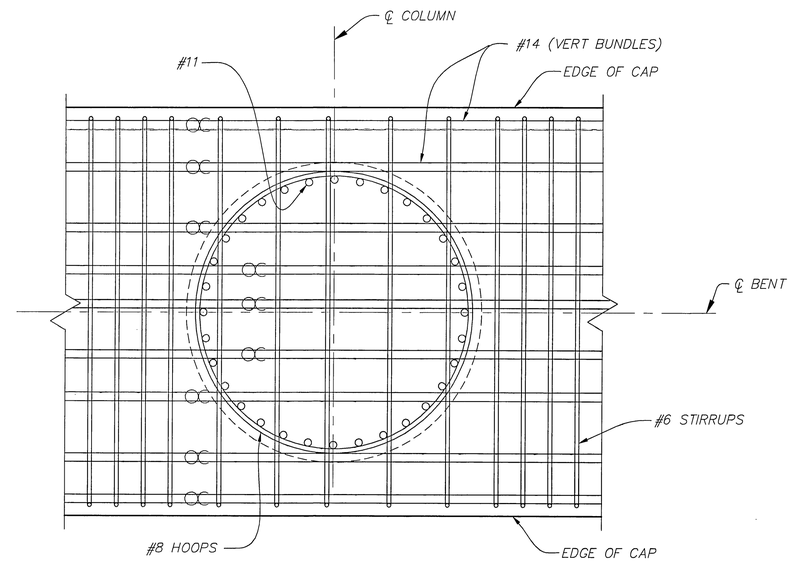

SECTION H
3/4" = 1'-0" S-12

LEGEND:

∝ INDICATES BUNDLE BAR

NOTES:

1. PLACE #4 J WITHIN 5'-6" ON EITHER SIDES OF ℄ COLUMN AT SAME SPACING AS STIRRUPS, TIED AROUND TOP LONGITUDINAL DECK SLAB REINF.
2. FOR BENT CAP STIRRUPS, SEE "BENT DETAILS NO. 1" SHEET.

AS BUILT
DATE 9-14-10

DMJM HARRIS | AECOM
800 NORTH HAVEN, SUITE 410
ONTARIO, CA 91764
T (909)291-8150 F (909)291-8166

REGISTERED PROFESSIONAL ENGINEER
LIMIN HE
No. 55635
Exp. 12-31-08
CIVIL
STATE OF CALIFORNIA

MARK	REVISIONS	APPR.	DATE

DESIGNED BY LH DRAWN BY LR CHECKED BY MW

COLUMBIA AVENUE OVERPASS AT BNSF RAILROAD

BENT DETAILS NO. 2

SCALE: AS SHOWN

ACCT. NO.
R-4036
S-13
SHEET 57 OF 103
BRIDGE # 56C0572

DWG: P:\60004223 Columbia Grade Sep\CADD\Struct\Sheet\BRIDGE\ST-13.dwg
TIME: 7-15-08 - 7:26am User: LandosE XRef Files: xbdr-bridge.dwg X-BENT.dwg

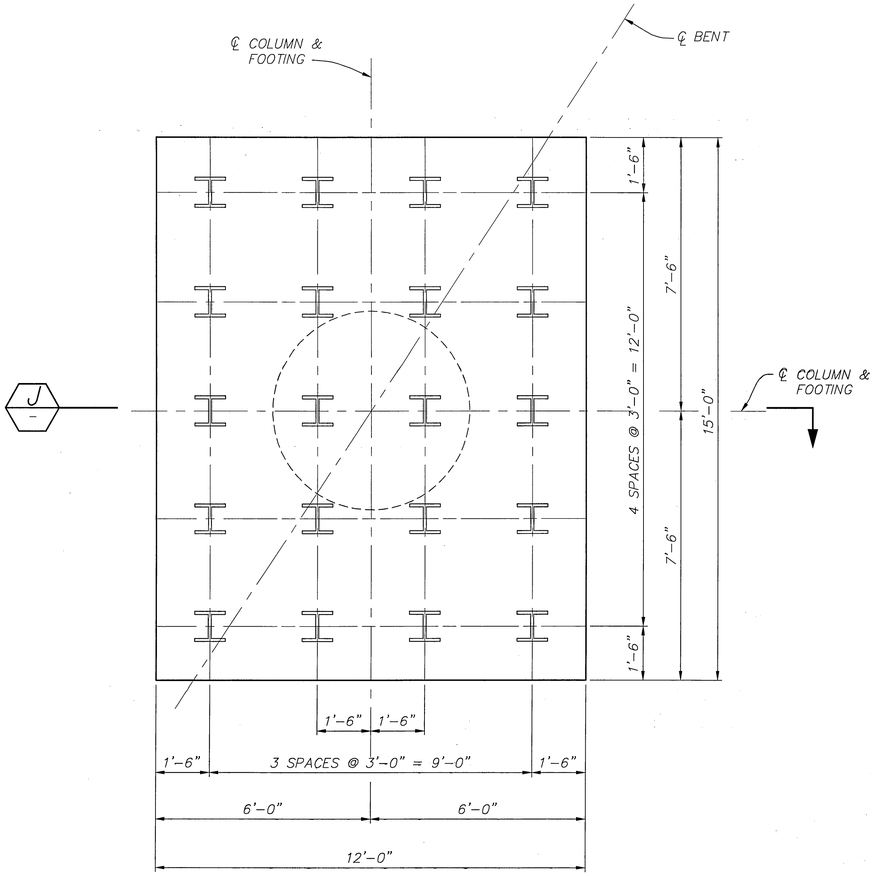

FOOTING PLAN

1/2" = 1'-0"

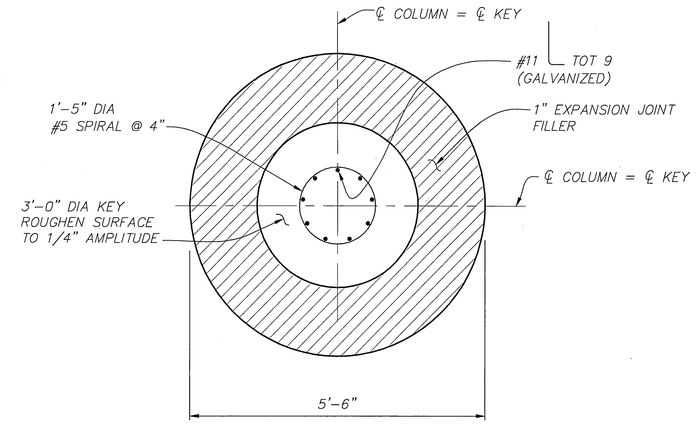

SECTION K

3/4" = 1'-0"

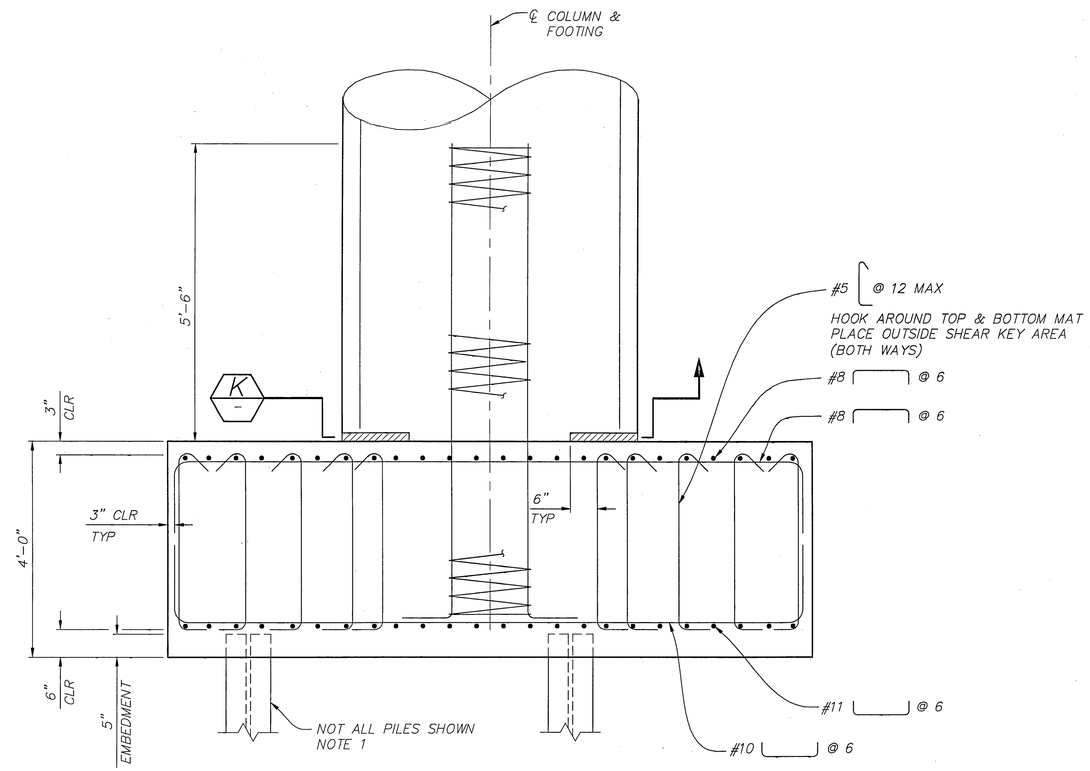

SECTION J

3/4" = 1'-0"

NOTE:

1. FOR STEEL PILE ANCHORAGE DETAILS SEE, "ABUTMENT DETAILS NO. 2" SHEET.

LEGEND:

H INDICATES VERTICAL HP STEEL PILE

AS BUILT

DATE 9-14-10

DMJM HARRIS | AECOM
800 NORTH HAVEN, SUITE 410
ONTARIO, CA 91764
T (909)291-8150 F (909)291-8166

REGISTERED PROFESSIONAL ENGINEER
LAWIN HE
No. 55635
Exp. 12-31-08
CIVIL
STATE OF CALIFORNIA

MARK	REVISIONS	APPR.	DATE

DESIGNED BY LH DRAWN BY EL CHECKED BY MW

COLUMBIA AVENUE OVERPASS AT BNSF RAILROAD

BENT DETAILS NO. 3

SCALE: AS SHOWN

ACCT. NO.

R-4036

S-14

SHEET 58 OF 103

BRIDGE # 56C0572

DWG: P:\60004223 Columbia Grade Sep\CADD\Struct\Sheet\BRIDGE\ST-14.dwg
TIME: 7-15-08 - 7:26am User: LandasE XRef Files: xbdr-bridge.dwg X-BENT.dwg

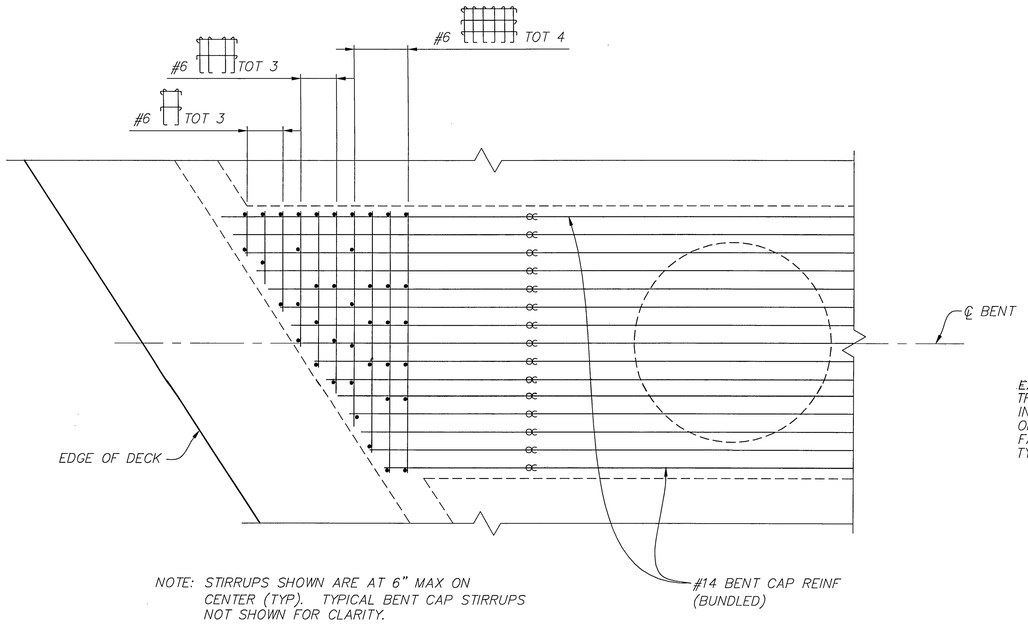

CORNER CAP REINFORCEMENT

1/2" = 1'-0"

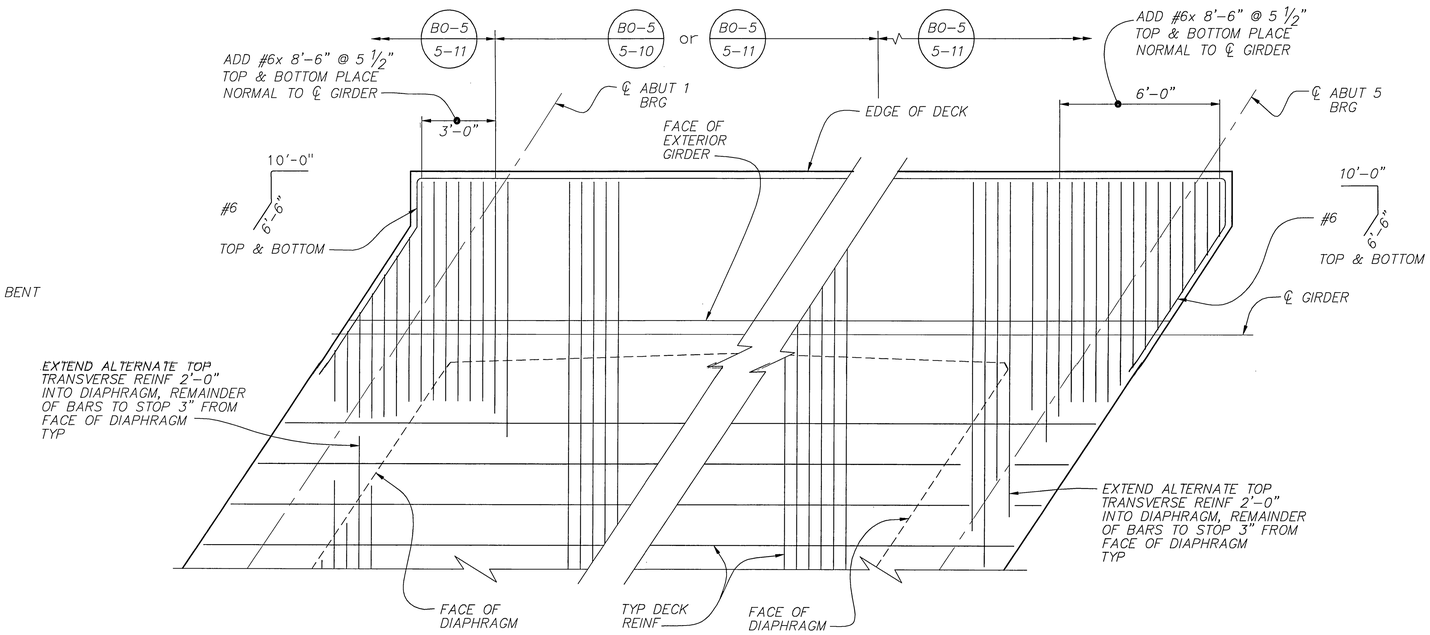

DECK CORNER REINFORCEMENT

3/8" = 1'-0"

AS BUILT
DATE 9-14-10

DMJM HARRIS | AECOM
800 NORTH HAVEN, SUITE 410
ONTARIO, CA 91764
T (909)291-8150 F (909)291-8166

REGISTERED PROFESSIONAL ENGINEER
LIMIN HE
No. 55635
Exp. 12-31-08
CIVIL
STATE OF CALIFORNIA

MARK	REVISIONS	APPR.	DATE

DESIGNED BY LH DRAWN BY LR CHECKED BY MW

COLUMBIA AVENUE OVERPASS AT BNSF RAILROAD

BENT DETAILS NO. 4

SCALE: AS SHOWN

ACCT. NO.

R-4036
S-15

SHEET 59 OF 103

BRIDGE # 56C0572

DWG: P:\60004223 Columbia Grade Sep\CADD\Struct\Sheet\BRIDGE\ST-15.dwg
TIME: 7-15-08 - 7:27am User: LandosE XRef Files: xbdr-bridge.dwg X-BENT.dwg

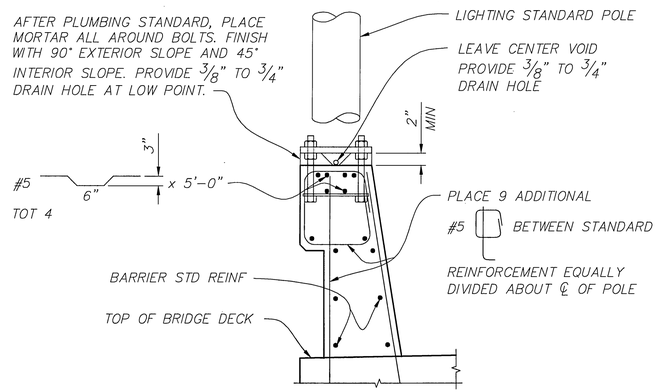

LIGHTING STANDARD ON CONCRETE BARRIER TYPE 732 (MOD) B11-55 ES-6A ES-6B

1" = 1'-0"

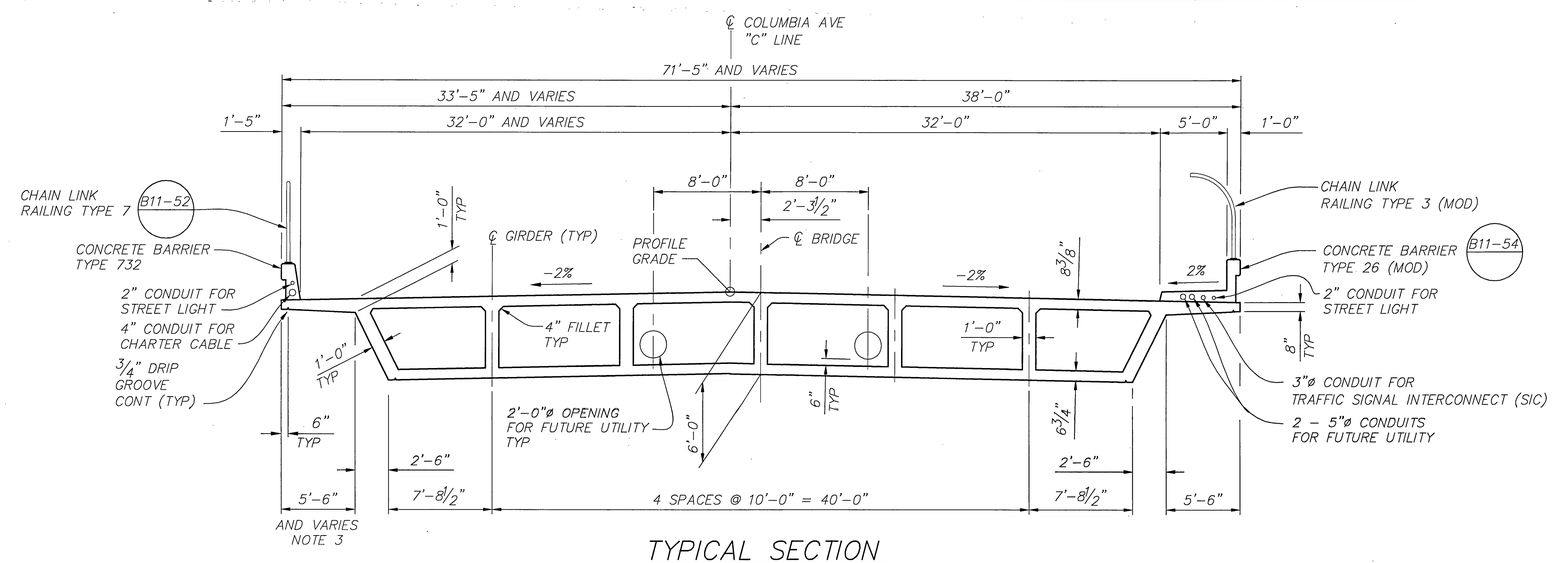

TYPICAL SECTION

3/16" = 1'-0"

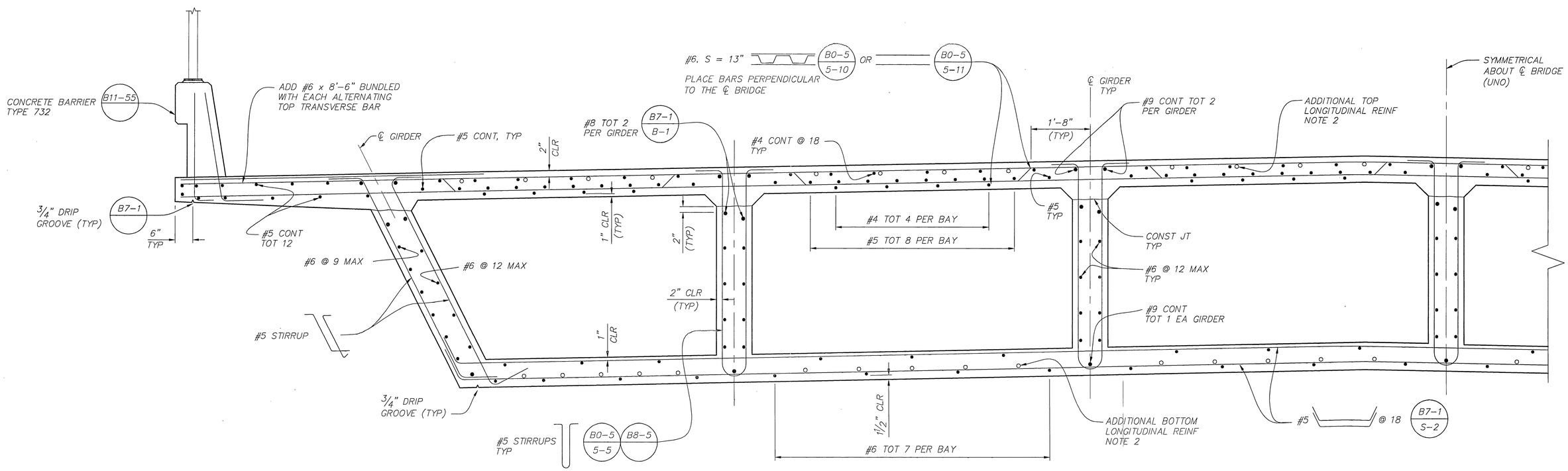

PART TYPICAL SECTION B0-5 B7-1 B7-10 B8-5

3/4" = 1'-0"

NOTES:

1. CONTINUOUS LONGITUDINAL REINFORCEMENT SHALL BE "SERVICE SPLICED".
2. FOR ADDITIONAL LONGITUDINAL REINFORCEMENT, SEE "GIRDER REINFORCEMENT" SHEETS.
3. SEE "GIRDER LAYOUT NO. 2" SHEET FOR DETAILS.

AS BUILT
DATE 9-14-10

MJM HARRIS | AECOM
800 NORTH HAVEN, SUITE 410
0

REGISTERED PROFESSIONAL ENGINEER LAWRENCE HE No. 55635 Exp. 12-31-08 CIVIL STATE OF CALIFORNIA

MARK	REVISIONS	APPR.	DATE

DESIGNED BY LH DRAWN BY EL CHECKED BY MW

COLUMBIA AVENUE OVERPASS AT BNSF RAILROAD

TYPICAL SECTION

SCALE: AS SHOWN

ACCT. NO.
R-4036
S-16
SHEET 60 OF 103
BRIDGE # 56C0572

DWG: P:\60004223 Columbia Grade Sep\CADD\Struct\Sheet\BRIDGE\ST-16.dwg
TIME: 7-15-08 - 7:27am User: LandasE XRef Files: xbdr-bridge.dwg X-TYPSECT.dwg

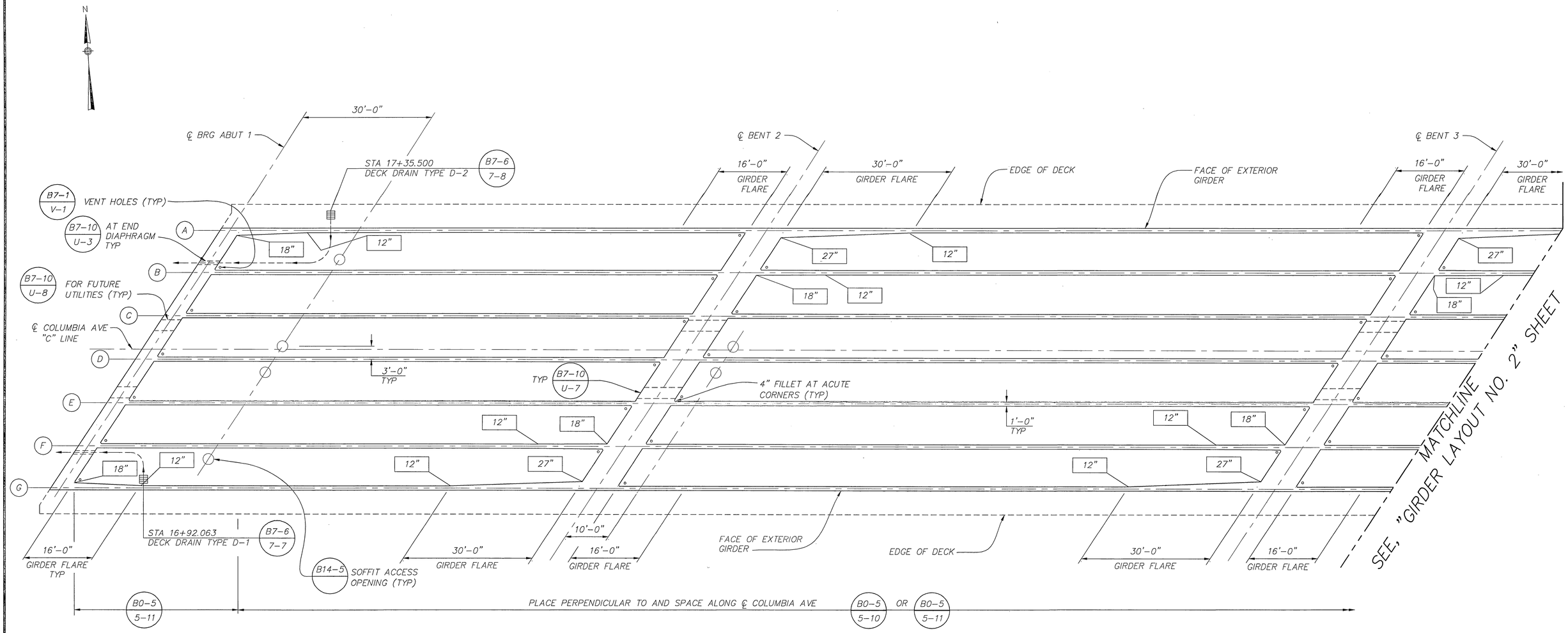

PLAN

3/32" = 1'-0"

B7-1

NOTE:

1. FOR PRESTRESSING NOTES AND LONGITUDINAL SECTION, SEE "GIRDER DETAILS NO. 1" SHEET.

LEGEND:

(A) GIRDER DESIGNATION

[26"] GIRDER FLARE WIDTH IN INCHES

—→ DRAIN PIPE

AS BUILT
DATE 9-14-10

DMJM HARRIS | AECOM
800 NORTH HAVEN, SUITE 410
ONTARIO, CA 91764
T (909)291-8150 F (909)291-8166

REGISTERED PROFESSIONAL ENGINEER
LIMIN HE
No. 55635
Exp. 12-31-08
CIVIL
STATE OF CALIFORNIA

MARK	REVISIONS	APPR.	DATE

DESIGNED BY LH DRAWN BY EL CHECKED BY MW

COLUMBIA AVENUE OVERPASS AT BNSF RAILROAD

GIRDER LAYOUT NO. 1

SCALE: AS SHOWN

ACCT. NO.
R-4036
S-17
SHEET 61 OF 103
BRIDGE # 56C0572

DWG: P:\60004223 Columbia Grade Sep\CADD\Struct\Sheet\BRIDGE\ST-17.dwg
TIME: 7-15-08 - 7:27am User: LondoseE XRef Files: xbdr-bridge.dwg X-GIRDERLAY.dwg

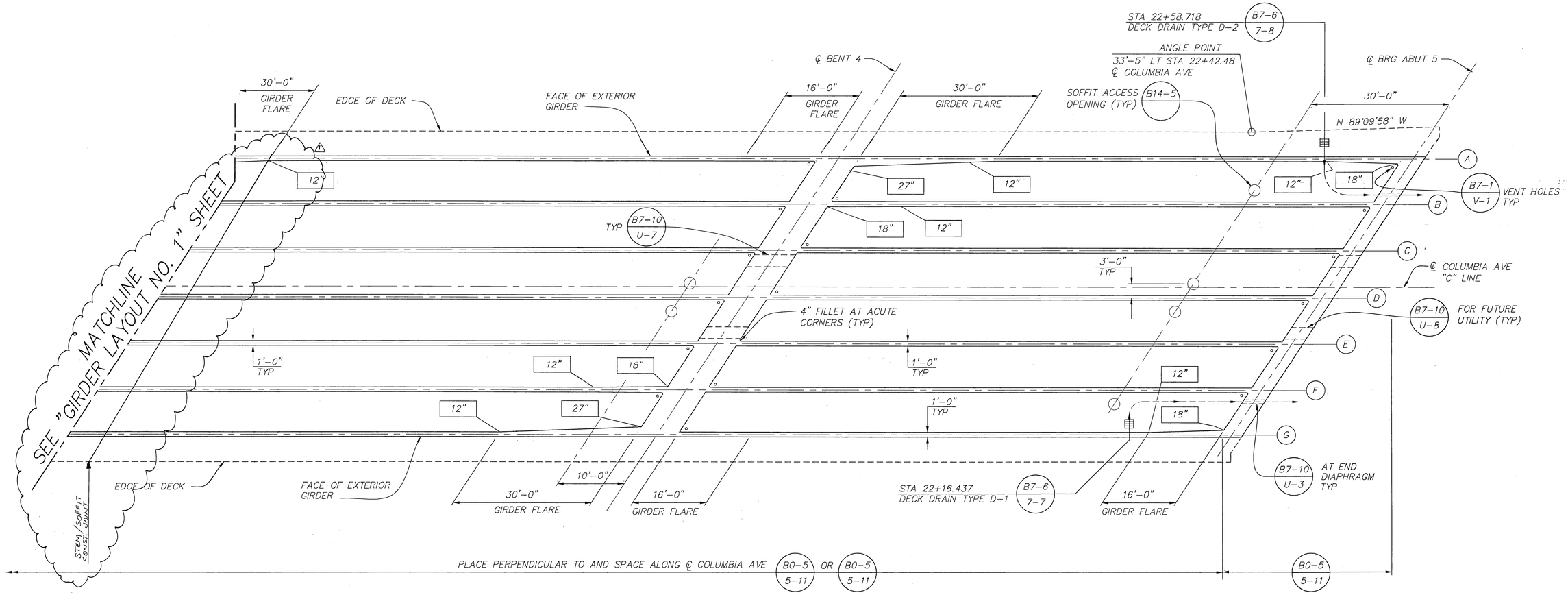

PLAN B7-1
3/32 = 1'-0"

NOTES:

1. SEE LEGEND ON "GIRDER LAYOUT NO. 1" SHEET.
2. FOR LONGITUDINAL SECTION, SEE "GIRDER DETAILS NO. 2" SHEET.
3. FOR PRESTRESSING NOTES, SEE "GIRDER DETAILS NO. 1" SHEET.

AS BUILT
DATE 9-14-10

DMJM HARRIS | AECOM
800 NORTH HAVEN, SUITE 410
ONTARIO, CA 91764
T (909)291-8150 F (909)291-8166

REGISTERED PROFESSIONAL ENGINEER
LIMIN HE
No. 55635
Exp. 12-31-08
CIVIL
STATE OF CALIFORNIA

MARK	REVISIONS	APPR.	DATE
1	AS BUILT	F.R.	9/14/10

DESIGNED BY LH DRAWN BY EL CHECKED BY MW

COLUMBIA AVENUE OVERPASS AT BNSF RAILROAD

GIEDER LAYOUT NO. 2

SCALE: AS SHOWN

ACCT. NO.
R-4036
S-18
SHEET 62 OF 103
BRIDGE # 56C0572

DWG: P:\60004223 Columbia Grade Sep\CADD\Struct\Sheet\BRIDGE\ST-18.dwg
TIME: 7-15-08 - 7:27am User: LandosE XRef Files: xbdr-bridge.dwg X-GIRDERLAY.dwg

PRESTRESSING NOTES

270 KSI LOW RELAXATION STRANDS:

Pjack	=	13110 KIPS
ANCHOR SET	=	3/8"
TOTAL NUMBER OF GIRDERS	=	7
FRICTION LOSS COEFFICIENT:		WOBBLE (K) = 0.0002/FT
CURVATURE	=	0.15

DISTRIBUTION OF PRESTRESS FORCE (PJACK) BETWEEN GIRDERS SHALL NOT EXCEED THE RATIO OF 3:2 OR MAXIMUMFINAL FORCE VARIATION BETWEEN GIRDERS SHALL NOT EXCEED 725 KIPS.

CONCRETE F'C = 4,500 PSI AT 28 DAYS
F'Ci = 3,500 PSI AT TIME OF STRESSING

CONTRACTOR SHALL SUBMIT ELONGATION CALCULATIONS BASED ON INITIAL STRESS AT ⊠ = 0.861 TIMES JACKING STRESS.

TWO END STRESSING SHALL BE PERFORMED

NOTES:

1. FOR GIRDER PLAN AND GIRDER DESIGNATION, SEE "GIRDER LAYOUT NO. 1" AND "GIRDER LAYOUT NO. 2" SHEETS.
2. FOR GIRDER CAMBER DIAGRAM, SEE "GIRDER DETAILS NO. 2" SHEET.

LEGEND:

⊠ THEORETICAL POINT OF NO MOVEMENT FOR TWO END STRESSING

(A) GIRDER DESIGNATION

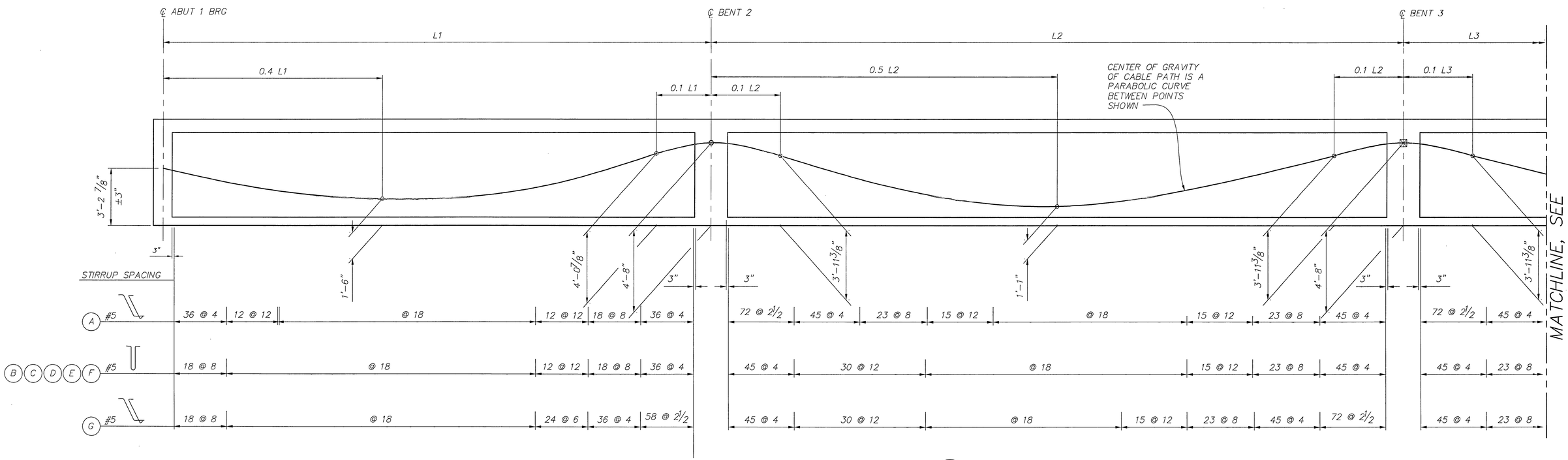

LONGITUDINAL SECTION (B8-5)

HORIZ 3/32" = 1'-0"
VERT 3/8" = 1'-0"

AS BUILT
DATE 9-14-10

DMJM HARRIS | AECOM
800 NORTH HAVEN, SUITE 410
ONTARIO, CA 91764
T (909)291-8150 F (909)291-8166

REGISTERED PROFESSIONAL ENGINEER LIMIN HE No. 55635 Exp. 12-31-08 CIVIL STATE OF CALIFORNIA

MARK	REVISIONS	APPR.	DATE

DESIGNED BY LH DRAWN BY LR CHECKED BY MW

COLUMBIA AVENUE OVERPASS AT BNSF RAILROAD

GIRDER DETAILS NO. 1

SCALE: AS SHOWN

ACCT. NO.
R-4036
S-19
SHEET 63 OF 103
BRIDGE # 56C0572

DWG: P:\60004223 Columbia Grade Sep\CADD\Struct\Sheet\BRIDGE\ST-19.dwg
TIME: 7-15-08 - 7:27am User: LondasE XRef Files: xbdr-bridge.dwg X-GIRDERLAY.dwg

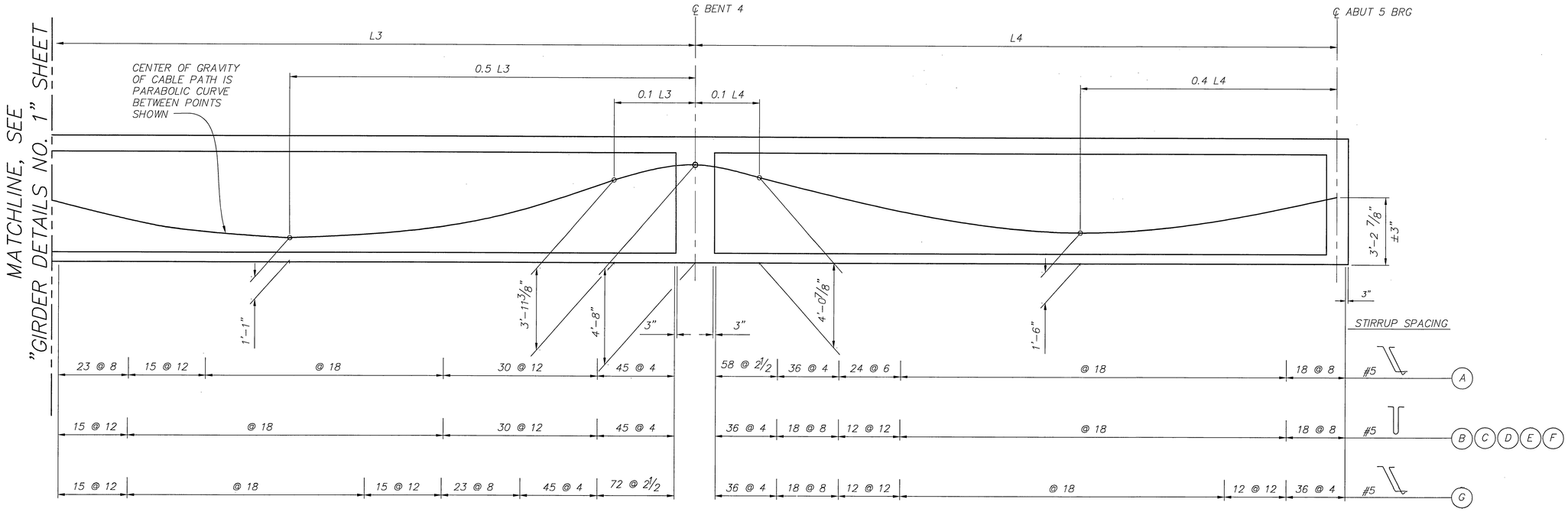

LONGITUDINAL SECTION (B8-5)

HORIZ 3/32" = 1'-0"
VERT 3/8" = 1'-0"

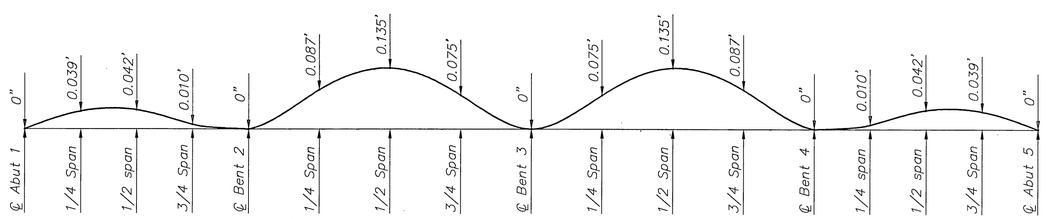

CAMBER DIAGRAM

NO SCALE

NOTE: CAMBER DOES NOT INCLUDE ALLOWANCE FOR FALSEWORK SETTLEMENT.

NOTES:

1. FOR GIRDER PLAN AND GIRDER DESIGNATION, SEE "GIRDER LAYOUT NO. 1" AND "GIRDER LAYOUT NO. 2" SHEETS.
2. FOR PRESTRESSING NOTES, SEE "GIRDER DETAILS NO. 1" SHEET.

LEGEND:

⊠ THEORETICAL POINT OF NO MOVEMENT FOR TWO END STRESSING

(A) GIRDER DESIGNATION

AS BUILT
DATE 9-14-10

DMJM HARRIS | AECOM
800 NORTH HAVEN, SUITE 410
ONTARIO, CA 91764
T (909)291-8150 F (909)291-8166

REGISTERED PROFESSIONAL ENGINEER
LIAN HE
No. 55635
Exp. 12-31-08
CIVIL
STATE OF CALIFORNIA

MARK	REVISIONS	APPR.	DATE

DESIGNED BY LH DRAWN BY LR CHECKED BY MW

COLUMBIA AVENUE OVERPASS AT BNSF RAILROAD

GIRDER DETAILS NO. 2

SCALE: AS SHOWN

ACCT. NO.
R-4036
S-20
SHEET 64 OF 103
BRIDGE # 56C0572

DWG: P:\60004223 Columbia Grade Sep\CADD\Struct\Sheet\BRIDGE\ST-20.dwg
TIME: 7-15-08 - 7:27am User: LandaseE XRef Files: xbdr-bridge.dwg X-GIRDERLAY.dwg P:\60004223 Columbia Grade Sep\CADD\Struct\Sheet\BRIDGE\ST-17.dwg

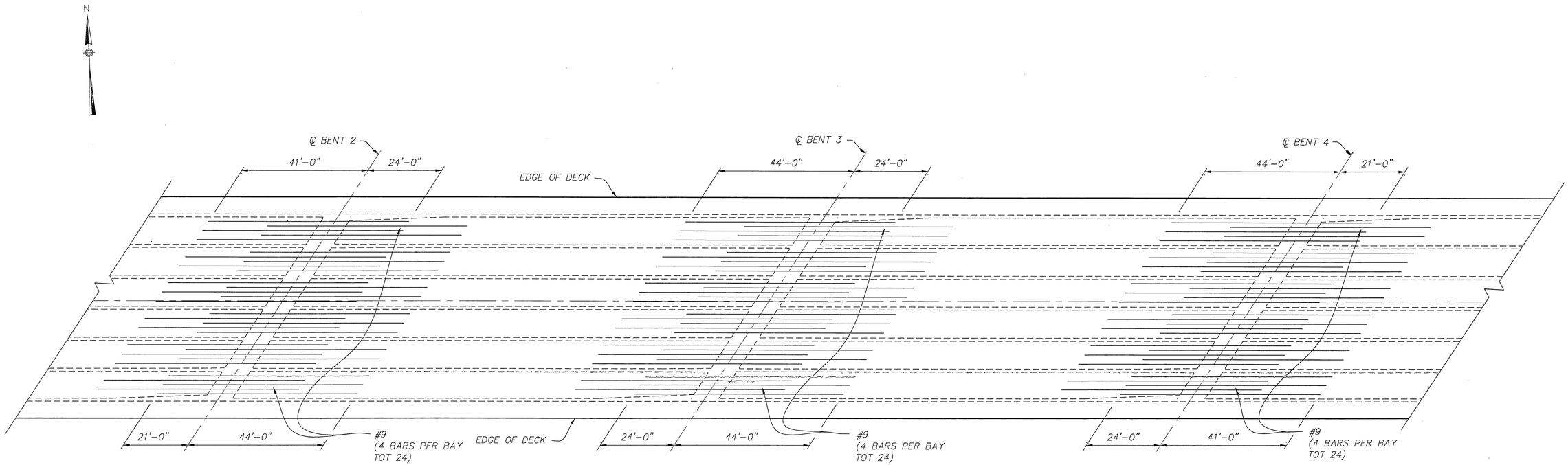

ADDITIONAL TOP LONGITUDINAL REINFORCEMENT

1/16" = 1'-0"

NOTES:

1. NOT ALL REINFORCEMENT ARE SHOWN FOR CLARITY.
2. ADDITIONAL BARS SHALL BE EVENLY SPACED BETWEEN THE INSIDE FACES OF GIRDERS.
3. NO SPLICE ALLOWED.
4. ALTERNATE THE LONGER AND SHORTER BARS.

AS BUILT
DATE 9-14-10

DMJM HARRIS | AECOM
800 NORTH HAVEN, SUITE 410
ONTARIO, CA 91764
T (909)291-8150 F (909)291-8166

REGISTERED PROFESSIONAL ENGINEER
LIMIN HE
No. 55635
Exp. 12-31-08
CIVIL
STATE OF CALIFORNIA

MARK	REVISIONS	APPR.	DATE

DESIGNED BY LH DRAWN BY EL CHECKED BY MW

COLUMBIA AVENUE OVERPASS AT BNSF RAILROAD

GIRDER REINFORCEMENT NO. 1

SCALE: AS SHOWN

ACCT. NO.
R-4036
S-21
SHEET 65 OF 103
BRIDGE # 56C0572

DWG: P:\60004223 Columbia Grade Sep\CADD\Struct\Sheet\BRIDGE\ST-21.dwg
TIME: 7-15-08 - 7:27am User: LandaE XRef Files: xbdr-bridge.dwg X-GIRDERLAY.dwg

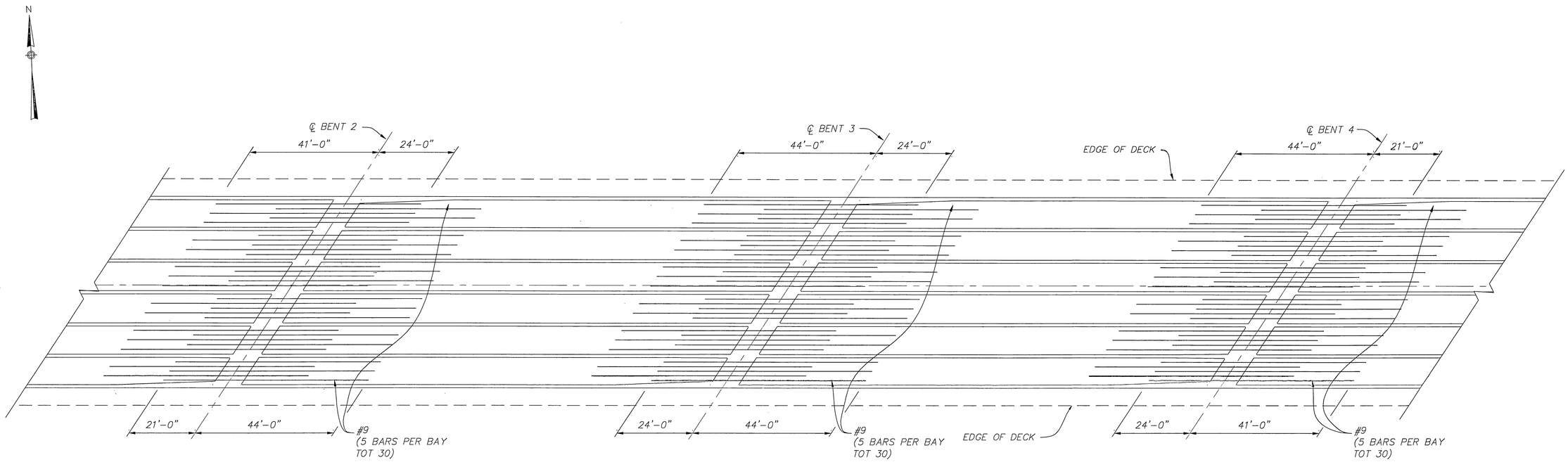

ADDITIONAL BOTTOM LONGITUDINAL REINFORCEMENT

1/16" = 1'-0"

NOTE:

1. SEE NOTES ON "GIRDER REINFORCEMENT NO. 1" SHEET.

AS BUILT
DATE 9-14-10

DMJM HARRIS | AECOM
800 NORTH HAVEN, SUITE 410
ONTARIO, CA 91764
T (909)291-8150 F (909)291-8166

REGISTERED PROFESSIONAL ENGINEER
LIMIN HE
No. 55635
Exp. 12-31-08
CIVIL
STATE OF CALIFORNIA

MARK	REVISIONS	APPR.	DATE

DESIGNED BY LH DRAWN BY EL CHECKED BY MW

COLUMBIA AVENUE OVERPASS AT BNSF RAILROAD

GIRDER REINFORCEMENT NO. 2

SCALE: AS SHOWN

ACCT. NO.

R-4036
S-22

SHEET 66 OF 103

BRIDGE # 56C0572

DWG: P:\60004223 Columbia Grade Sep\CADD\Struct\Sheet\BRIDGE\ST-22.dwg
TIME: 7-15-08 - 7:27am User: LandasE XRef Files: xbdr-bridge.dwg X-GIRDERLAY.dwg

DIST.	COUNTY	ROUTE	KILOMETER POST TOTAL PROJECT	SHEET NO.	TOTAL SHEETS
–	Riv	–	–		

REGISTERED ENGINEER – CIVIL

PLANS APPROVAL DATE

The State of California or its officers or agents shall not be responsible for the accuracy or completeness of electronic copies of this plan sheet.

REGISTERED PROFESSIONAL ENGINEER No. Exp. CIVIL STATE OF CALIFORNIA

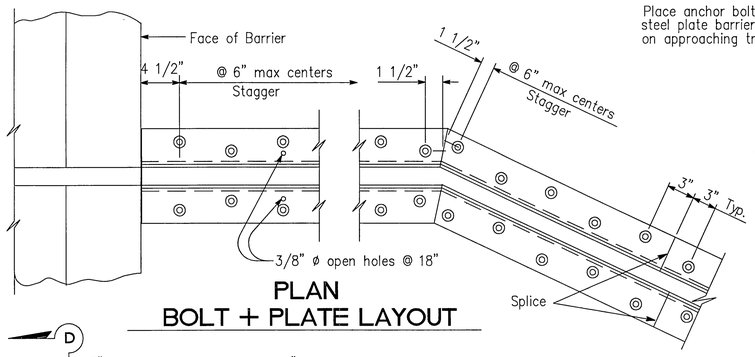

PLAN
BOLT + PLATE LAYOUT

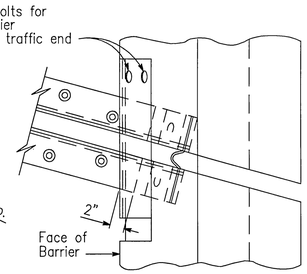

SKEW ≤ 20°

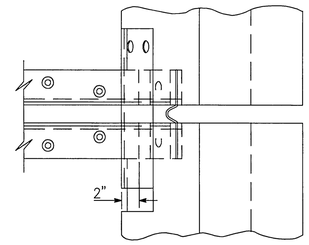

SKEW > 20°

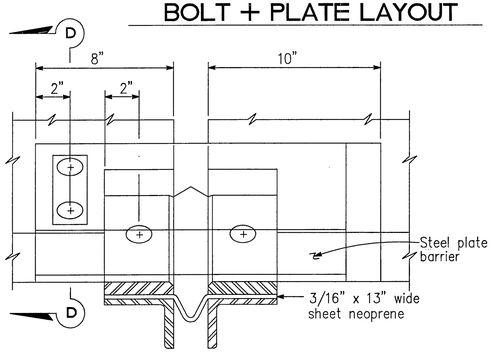

VIEW B-B

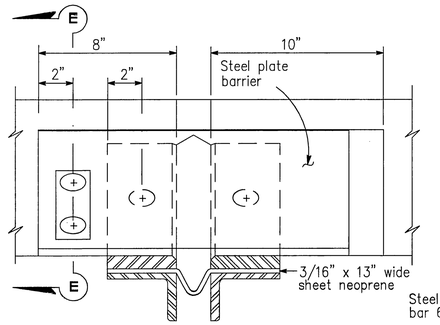

VIEW C-C

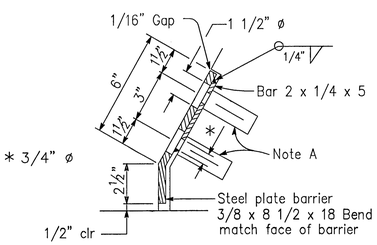

SECTION D-D

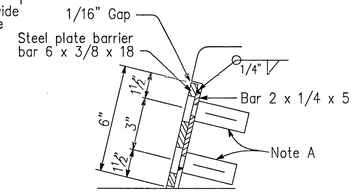

SECTION E-E

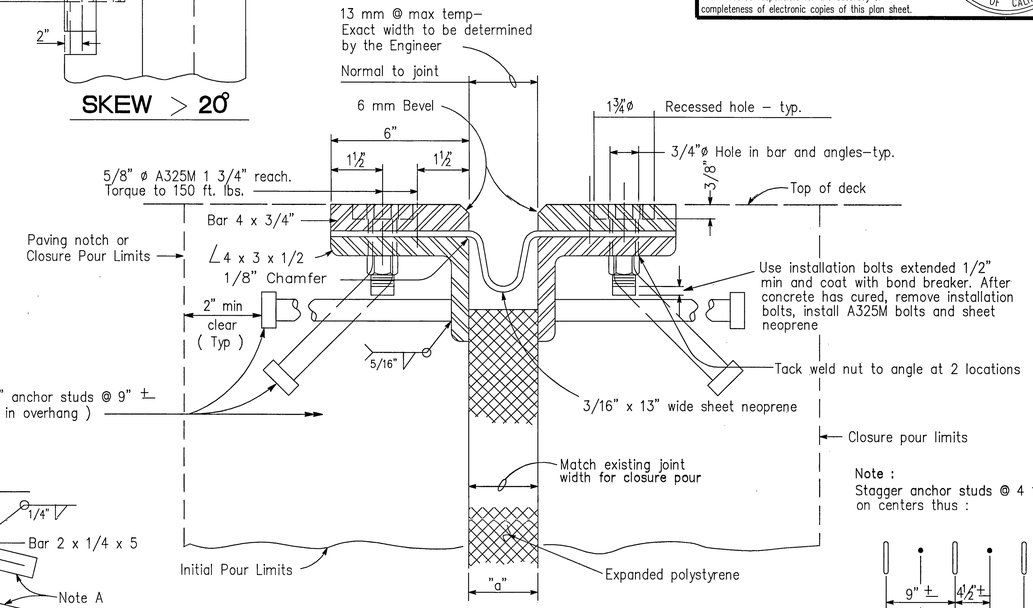

SECTION A-A

Note :
Stagger anchor studs @ 4 1/2" ± on centers thus :

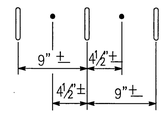

Joint Information			"a" Dimensions		
Location	Movement Rating (MR)	Skew	Winter	Spring & Fall	Summer
Abut 1	4"	33° 50' 30"	2 1/8"	1 5/8"	1 1/8"
Abut 5	4"	33° 50' 30"	2 1/8"	1 5/8"	1 1/8"

1

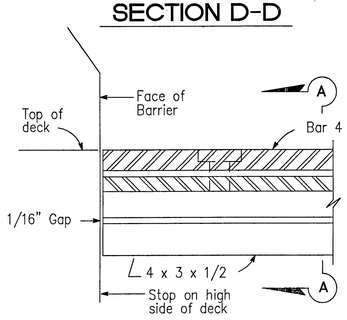

HIGH SIDE
BARRIER DETAIL

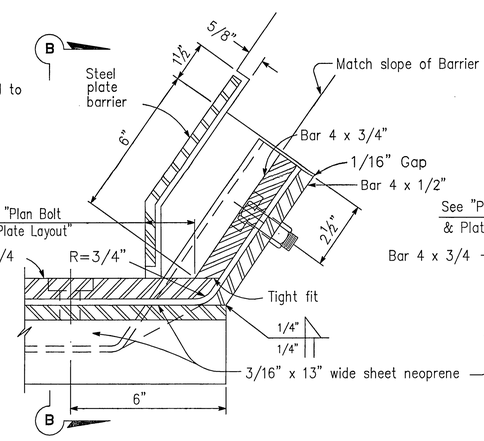

LOW SIDE
BARRIER DETAIL
(See Note B)

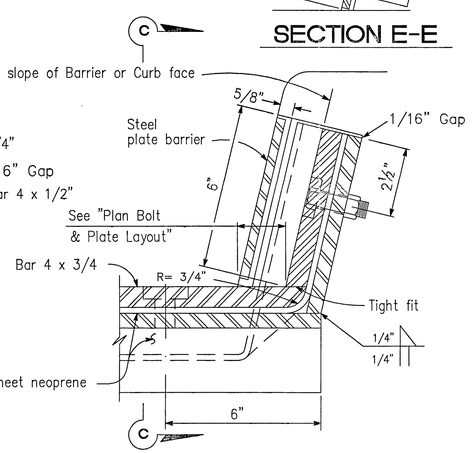

SIDEWALK DETAIL
(See Note B)

NOTES:

Full penetration butt welds may be substituted for fillet welds on all anchor studs.

Alternate types of anchor studs may be permitted subject to the approval by the Engineer.

Joint seal assembly to be used in conjunction with closure pour. (See other sheets for limits). Closure pour shall not be placed until final deck surface is within the tolerance specified.

Use joint at crown of roadway, at any change in transverse slope in deck and at changes in horizontal direction. Place other joints at or near lanes. All metal parts to be painted or galvanized after fabrication.

Sheet neoprene shall be fabricated in one continuous piece or joints shall be vulcanized. Neoprene shall be fabricated to bend around corners. 1" holes in neoprene sheets shall be drilled or punched so that the neoprene is not distorted at the time of installation.

NOTE A

Insert assembly or expansion anchorage for 5/8" x 1 3/4" A325M bolt.

NOTE B

Use the Sidewalk Detail at all sidewalk joints. Use the Barrier Detail at both sides if the roadway is crowned or if the difference in elevation between the ends of the seal is 0.5' or less.

NO SCALE

NOT FOR CONSTRUCTION

STANDARD DRAWING

RELEASE DATE	4/1/97	DESIGN	BY H. HERR	CHECKED R. LACALLE	RELEASED BY
FILE NO.	xs8-010	DETAILS	BY R. YEE	CHECKED R. LACALLE	OFFICE CHIEF
		SUBMITTED	BY C. W. PURKISS	DRAWING DATE 9/93	

1 Added Joint Information and "a" dimension

STATE OF CALIFORNIA
DEPARTMENT OF TRANSPORTATION

DIVISION OF ENGINEERING SERVICES

BRIDGE NO. –
KILOMETER POST –

COLUMBIA AVENUE OVERHEAD

JOINT SEAL ASSEMBLY
(MAXIMUM MOVEMENT RATING = 4")

DS OSD 2147A (METRIC) (REV. 2/25/97)

ORIGINAL SCALE IN MILLIMETERS FOR REDUCED PLANS 0 10 20 30 40 50 60 70 80 90 100

CU –
EA –

DISREGARD PRINTS BEARING EARLIER REVISION DATES

REVISION DATES (PRELIMINARY STAGE ONLY)

SHEET 23 OF XX

USERNAME => $USER

$REQUEST

DATE PLOTTED => $DATE TIME PLOTTED => $TIME

AS BUILT
DATE 9-14-10

DMJM HARRIS | AECOM
800 NORTH HAVEN, SUITE 410
ONTARIO, CA 91764
T (909)291-8150 F (909)291-8166

REGISTERED PROFESSIONAL ENGINEER LAWRENCE HE No. 55635 Exp. 12-31-08 CIVIL STATE OF CALIFORNIA

MARK	REVISIONS	APPR.	DATE

DESIGNED BY LH DRAWN BY LR CHECKED BY MW

COLUMBIA AVENUE OVERPASS AT BNSF RAILROAD

JOINT SEAL ASSEMBLY

SCALE: AS SHOWN

ACCT. NO.

R-4036
S-23

SHEET 67 OF 103

BRIDGE # 56C0572

DWG: P:\60004223 Columbia Grade Sep\CADD\Struct\Sheet\BRIDGE\ST-23.dwg
TIME: 7-15-08 – 7:27am User: LandaseE XRef Files: xbdr-bridge.dwg

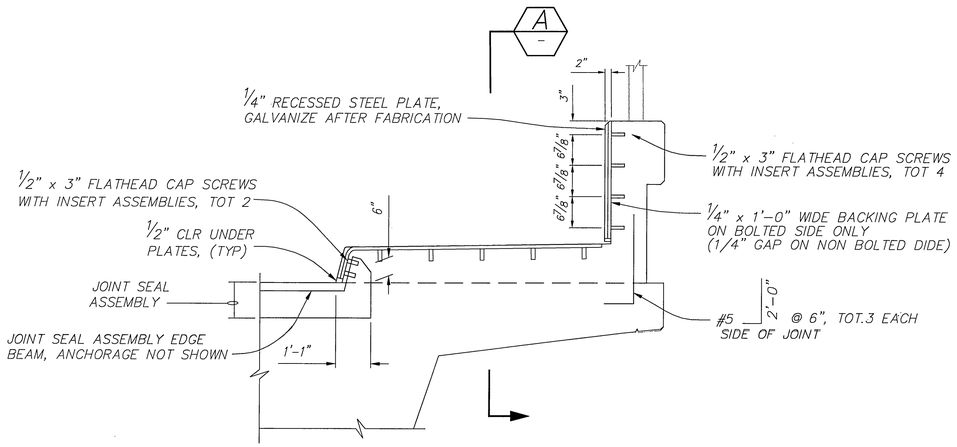

TYPICAL SEAL INSTALLATION

3/4" = 1'-0"

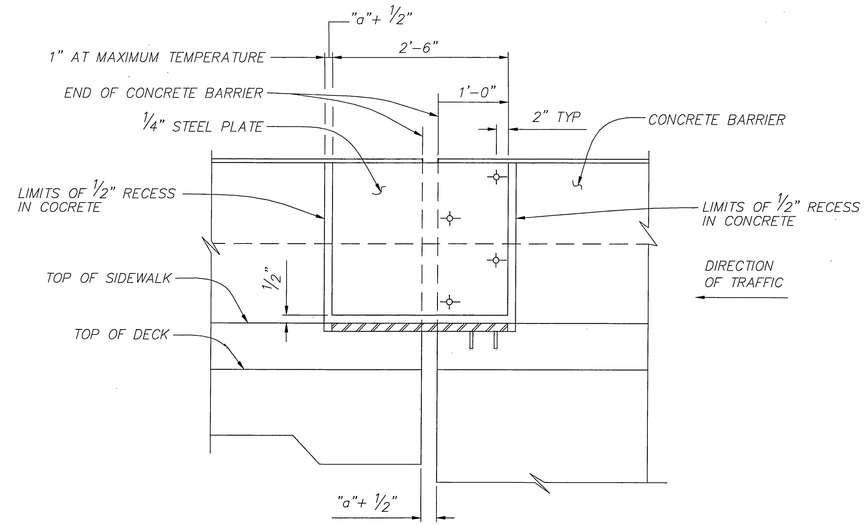

SECTION A

1" = 1'-0"

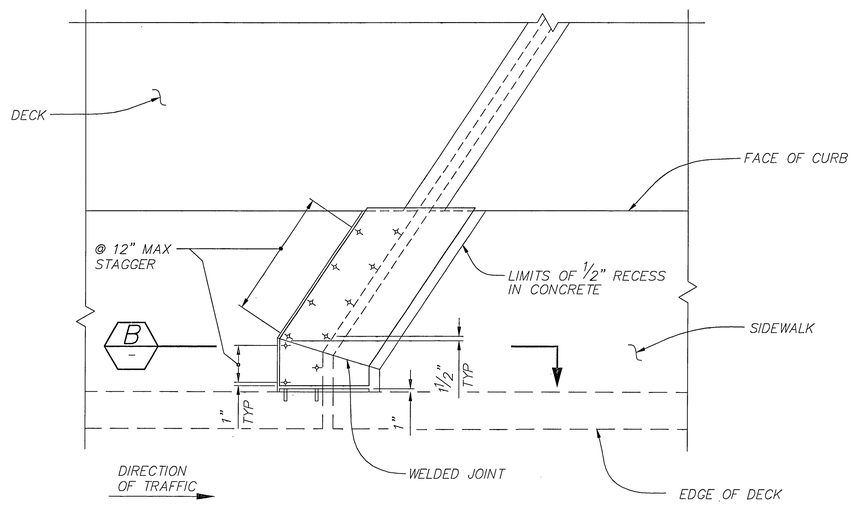

PLAN – DECK JOINT

1/2" = 1'-0"

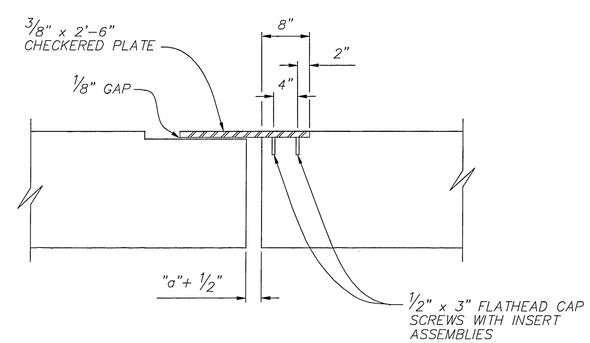

SECTION B

1" = 1'-0"

SIDEWALK JOINT ARMOR DETAIL

AS BUILT
DATE 9-14-10

DMJM HARRIS | AECOM
800 NORTH HAVEN, SUITE 410
ONTARIO, CA 91764
T (909)291-8150 F (909)291-8166

REGISTERED PROFESSIONAL ENGINEER
LAWN HE
No. 55635
Exp. 12-31-08
CIVIL
STATE OF CALIFORNIA

MARK	REVISIONS	APPR.	DATE

DESIGNED BY LH DRAWN BY LR CHECKED BY MW

COLUMBIA AVENUE OVERPASS AT BNSF RAILROAD

JOINT ARMOR DETAILS

SCALE: AS SHOWN

ACCT. NO.
R-4036
S-24
SHEET 68 OF 103
BRIDGE # 56C0572

DWG: P:\60004223 Columbia Grade Sep\CADD\Struct\Sheet\BRIDGE\ST-24.dwg
TIME: 7-15-08 – 7:27am User: LandosE XRef Files: xbdr-bridge.dwg

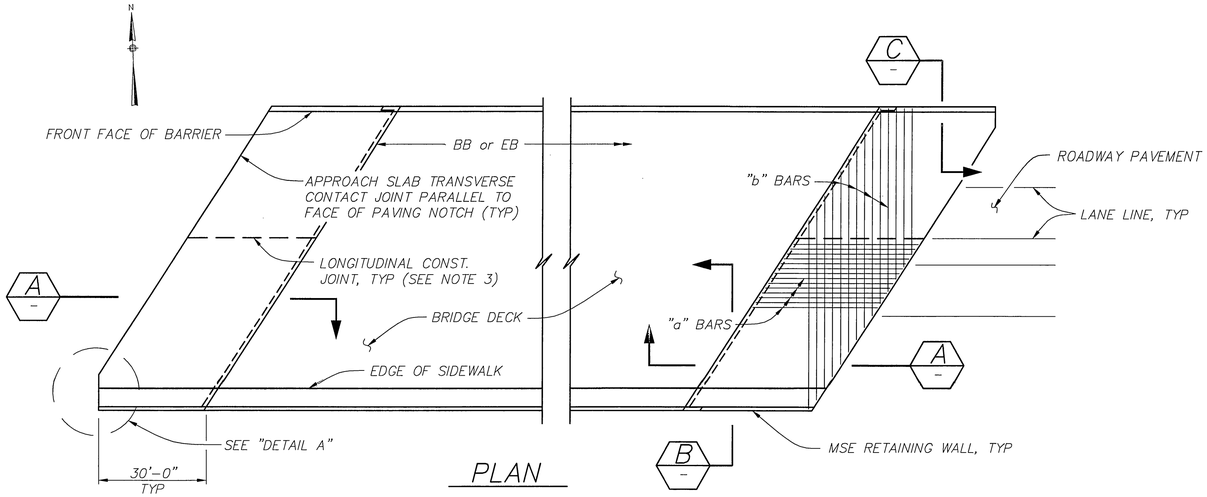

PLAN

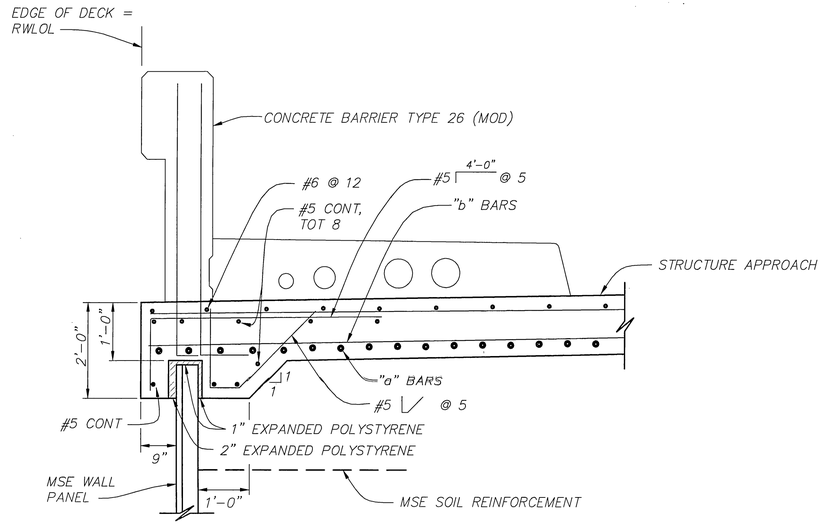

SECTION B

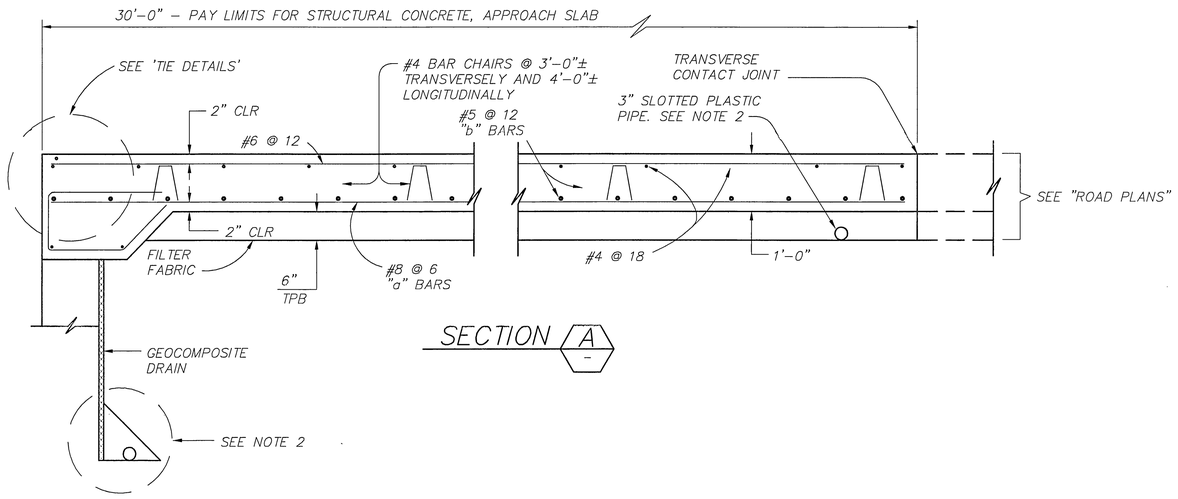

SECTION A

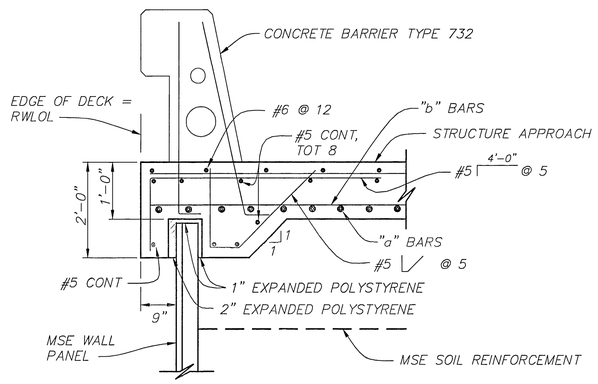

SECTION C

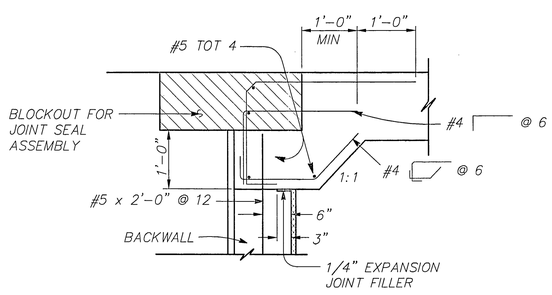

TIE DETAILS

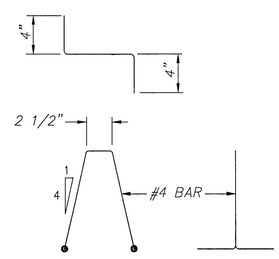

BAR CHAIR DETAIL

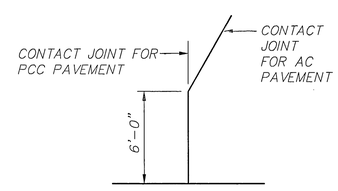

DETAIL A

NOTES:

1. FOR DETAILS NOT SHOWN, SEE STRUCTURE PLANS.
2. FOR DRAINAGE DETAILS, SEE "STRUCTURE APPROACH DRAINAGE DETAILS" SHEET.
3. LONGITUDINAL CONSTRUCTION JOINTS, WHEN PERMITTED BY THE ENGINEER, SHALL BE LOCATED ON LANE LINES.
4. AT THE CONTRACTOR'S OPTION, APPROACH SLAB TRANSVERSE REINFORCEMENT MAY BE PLACED PARALLEL TO PAVING NOTCH. SPACING OF TRANSVERSE REINFORCEMENT IS MEASURED ALONG ℄ ROADWAY.

REMOVE ALL POLYSTYRENE

AS BUILT
DATE 9-14-10

DMJM HARRIS | AECOM
800 NORTH HAVEN, SUITE 410
ONTARIO, CA 91764
T (909)291-8150 F (909)291-8166

REGISTERED PROFESSIONAL ENGINEER
LIMIN HE
No. 55635
Exp. 12-31-08
CIVIL
STATE OF CALIFORNIA

MARK	REVISIONS	APPR.	DATE

DESIGNED BY LH DRAWN BY LR CHECKED BY MW

COLUMBIA AVENUE OVERPASS AT BNSF RAILROAD

STRUCTURE APPROACH
TYPE N(30)S

SCALE AS SHOWN

ACCT. NO.
R-4036
S-25
SHEET 69 OF 103
BRIDGE # 56C0572

DWG: P:\60004223 Columbia Grade Sep\CADD\Struct\Sheet\BRIDGE\ST-25.dwg
TIME: 7-15-08 – 7:27am User: LandaeE XRef Files: xbdr-bridge.dwg P:\60004223 Coumbial Grade Sep\CADD\Struct\Ref\X-BRIDGE-COLUMBIA-S.dwg

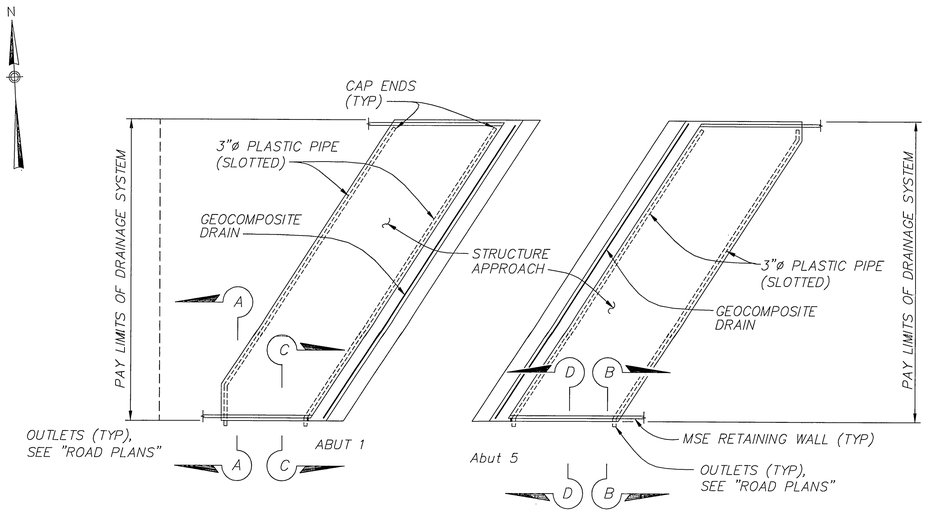

TYPICAL PLAN

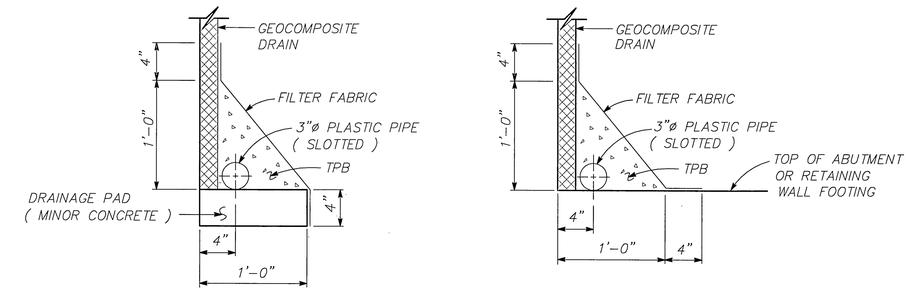

WITHOUT FOOTING

WITH FOOTING

DRAINAGE DETAILS

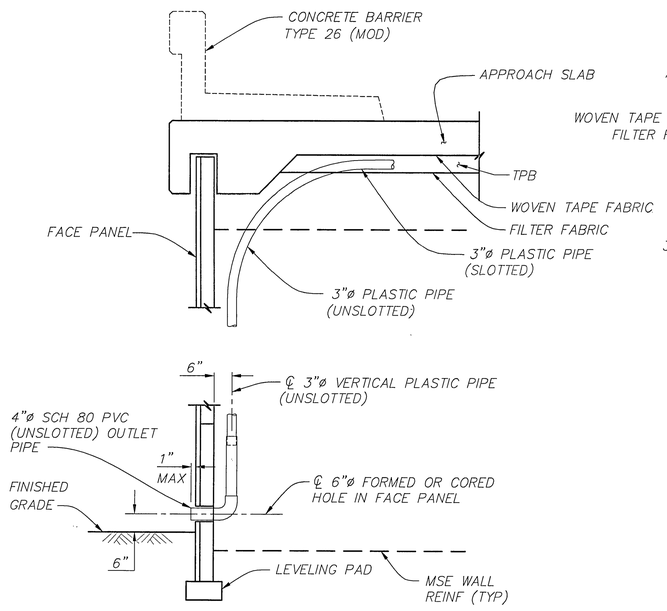

SECTION A–A

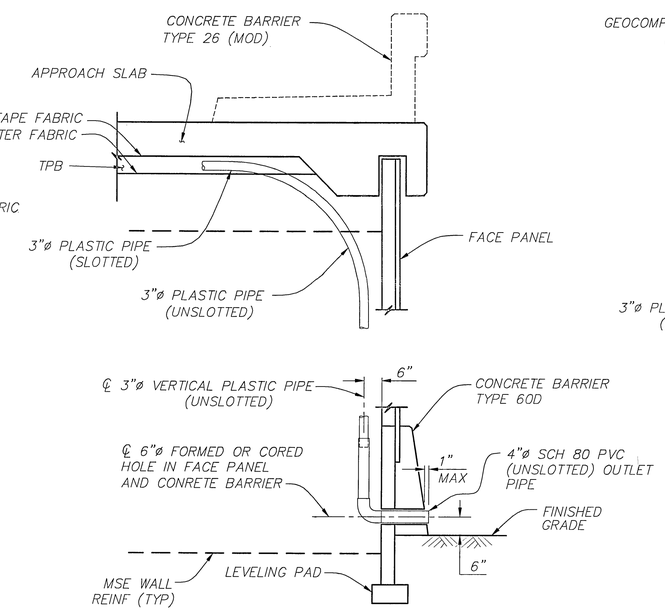

SECTION B–B

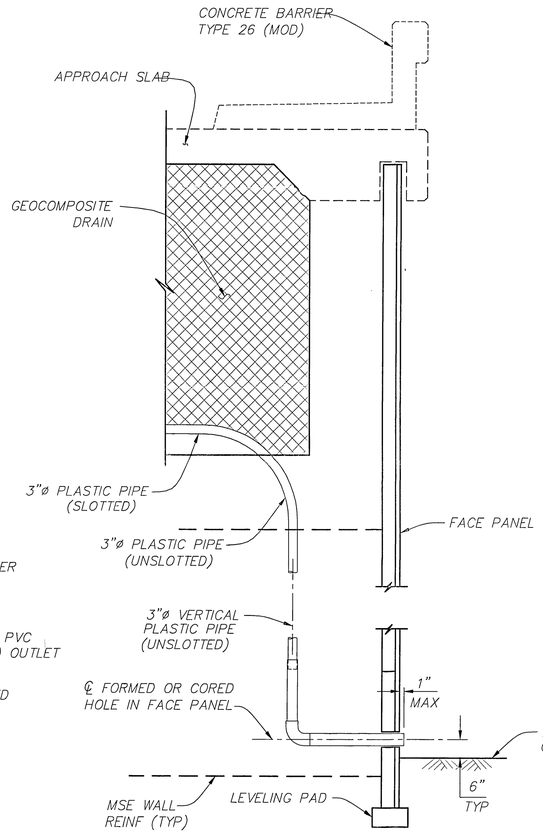

SECTION C–C

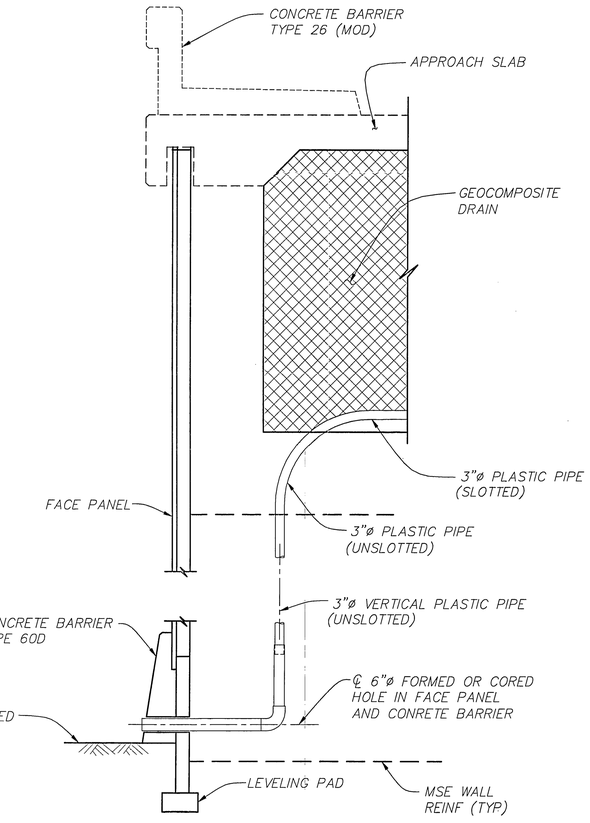

SECTION D–D

NOTE: BENDS AND JUNCTIONS IN 3" PLASTIC PIPE ARE 2'-6" RADIUS MIN.

AS BUILT
DATE 9-14-10

DMJM HARRIS | AECOM
800 NORTH HAVEN, SUITE 410
ONTARIO, CA 91764
T (909)291-8150 F (909)291-8166

REGISTERED PROFESSIONAL ENGINEER
LIAN HE
No. 55635
Exp. 12-31-08
CIVIL
STATE OF CALIFORNIA

MARK	REVISIONS	APPR.	DATE

DESIGNED BY LH DRAWN BY EL CHECKED BY MW

COLUMBIA AVENUE OVERPASS AT BNSF RAILROAD

STRUCTURE APPROACH
DRAINAGE DETAILS

SCALE: AS SHOWN

ACCT. NO.
R-4036
S-26
SHEET 70 OF 103
BRIDGE # 56C0572

DWG: P:\60004223 Columbia Grade Sep\CADD\Struct\Sheet\BRIDGE\ST-26.dwg
TIME: 7-15-08 - 7:27am User: LandaseE XRef Files: xbdr-bridge.dwg

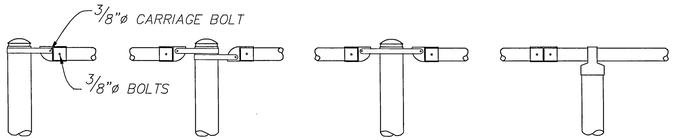

ALTERNATIVE DETAILS

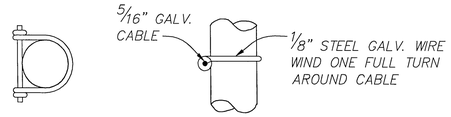

PLAN ELEVATION

DETAIL H

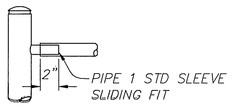

TYPICAL DETAILS

NOTES:

1. RAILING ASSEMBLY EXCEPT CHAIN LINK FABRIC TO BE GALVANIZED AFTER FABRICATION.
2. RAILING SHALL CONFORM TO HORIZONTAL AND VERTICAL ALIGNMENT. POSTS SHALL BE VERTICAL.
3. PEEN ALL 3/8" ø BOLTS.
4. WHEN RAILING IS ON SLOPE, FABRIC SHALL BE PLACED PARALLEL TO SLOPE.
5. ALTERNATIVE DETAILS MAY BE SUBMITTED BY CONTRACTOR FOR ENGINEER'S APPROVAL.

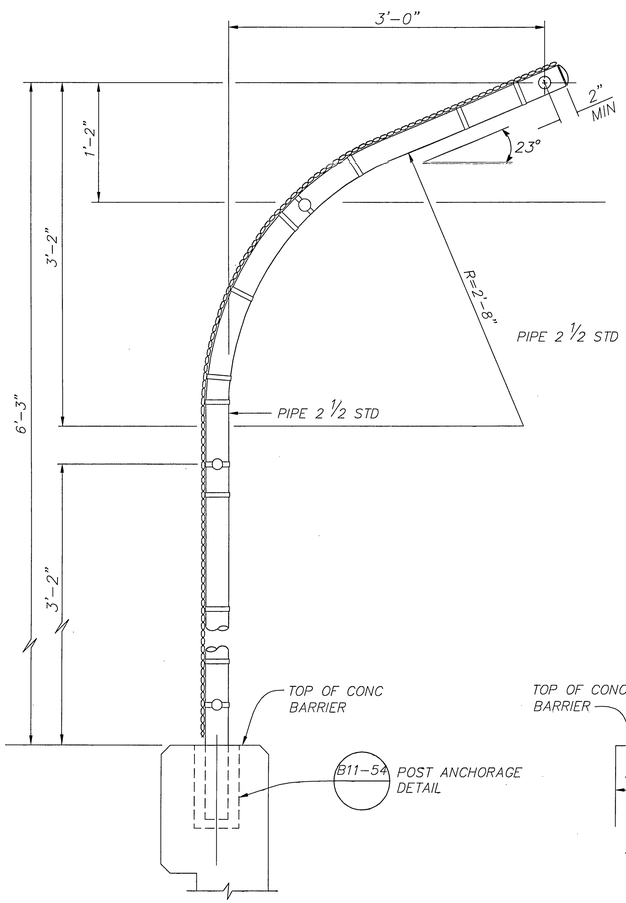

TYPICAL POST DETAIL

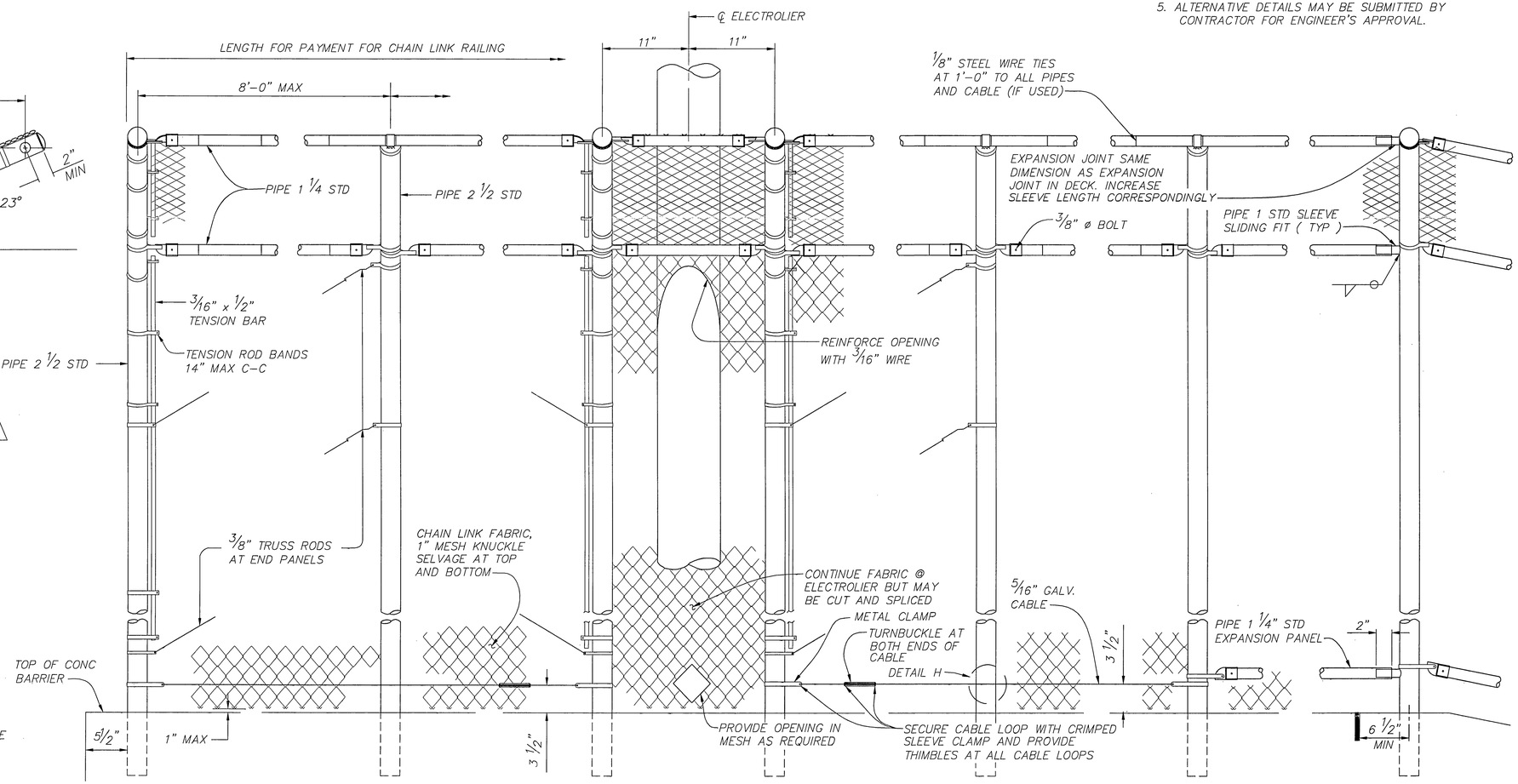

ELEVATION

AS BUILT
DATE 9-14-10

DMJM HARRIS | AECOM
800 NORTH HAVEN, SUITE 410
ONTARIO, CA 91764
T (909)291-8150 F (909)291-8166

REGISTERED PROFESSIONAL ENGINEER
LIAN THE
No. 55635
Exp. 12-31-08
CIVIL
STATE OF CALIFORNIA

MARK	REVISIONS	APPR.	DATE

DESIGNED BY LH DRAWN BY LR CHECKED BY MW

COLUMBIA AVENUE OVERPASS AT BNSF RAILROAD

CHAIN LINK RAILING
TYPE 3 (MOD)

SCALE: AS SHOWN

ACCT. NO.
R-4036
S-27
SHEET 71 OF 103
BRIDGE # 56C0572

DWG: P:\60004223 Columbia Grade Sep\CADD\Struct\Sheet\BRIDGE\ST-27.dwg
TIME: 7-15-08 - 7:28am User: LandaseE XRef Files: xbdr-bridge.dwg P:\60004223 Columbia Grade Sep\CADD\Struct\Ref\x-Chain Linktype 3.dwg

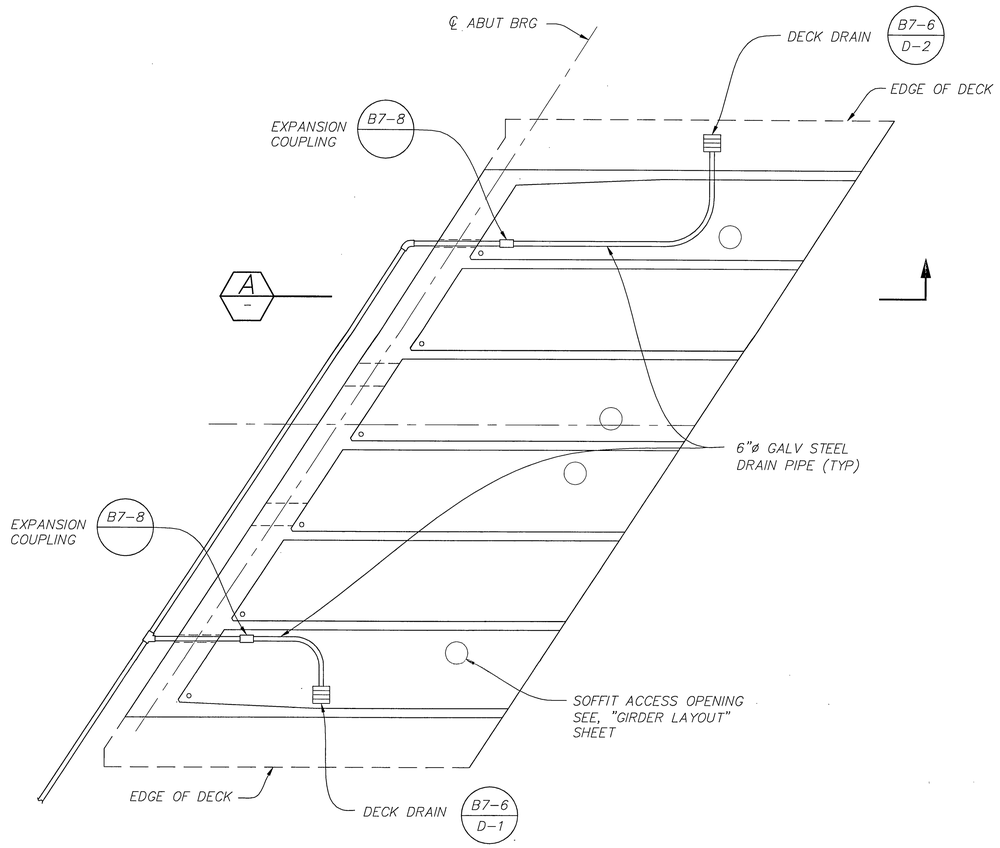

PLAN
1/8" = 1'-0"

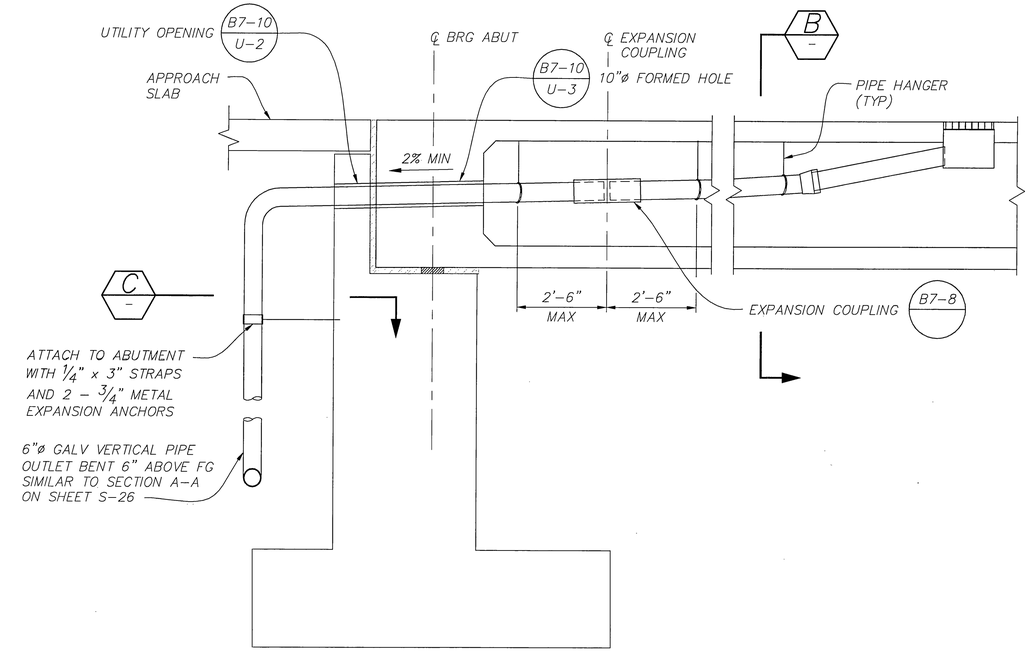

SECTION A
1/2" = 1'-0"

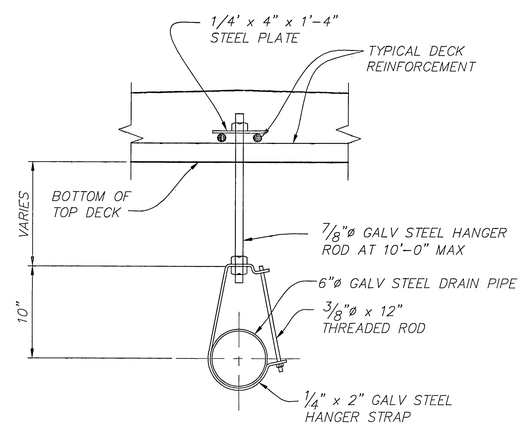

SECTION B
1 1/2" = 1'-0"

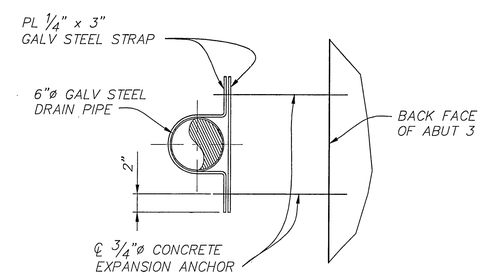

SECTION C
1 1/2" = 1'-0"

AS BUILT
DATE 9-14-10

DMJM HARRIS | AECOM
800 NORTH HAVEN, SUITE 410
ONTARIO, CA 91764
T (909)291-8150 F (909)291-8166

REGISTERED PROFESSIONAL ENGINEER
LOWEN HE
No. 55635
Exp. 12-31-08
CIVIL
STATE OF CALIFORNIA

MARK	REVISIONS	APPR.	DATE

DESIGNED BY LH DRAWN BY EL CHECKED BY MW

COLUMBIA AVENUE OVERPASS AT BNSF RAILROAD

MISCELLANEOUS DETAILS

SCALE: AS SHOWN

ACCT. NO.
R-4036
S-28
SHEET 72 OF 103
BRIDGE # 56C0572

DWG: P:\60004223-Columbia Grade Sep\CADD\Struct\Sheet\BRIDGE\ST-28.dwg
TIME: 7-15-08 - 7:28am User: LandaseE XRef Files: xbdr-bridge.dwg X-DECK_DRAIN.dwg

PLAN

1" = 100'

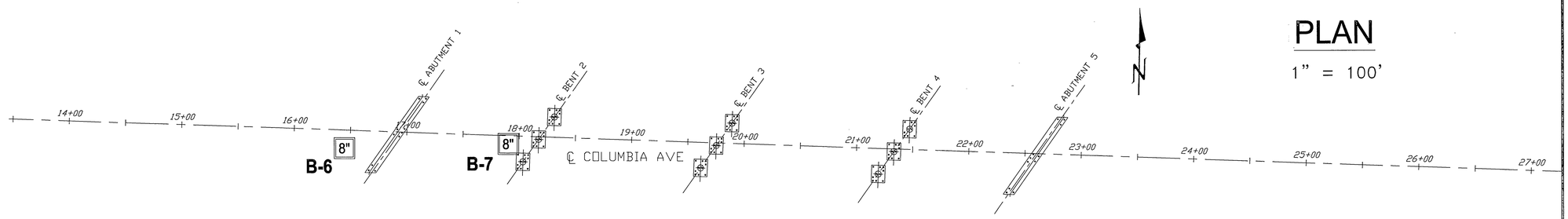

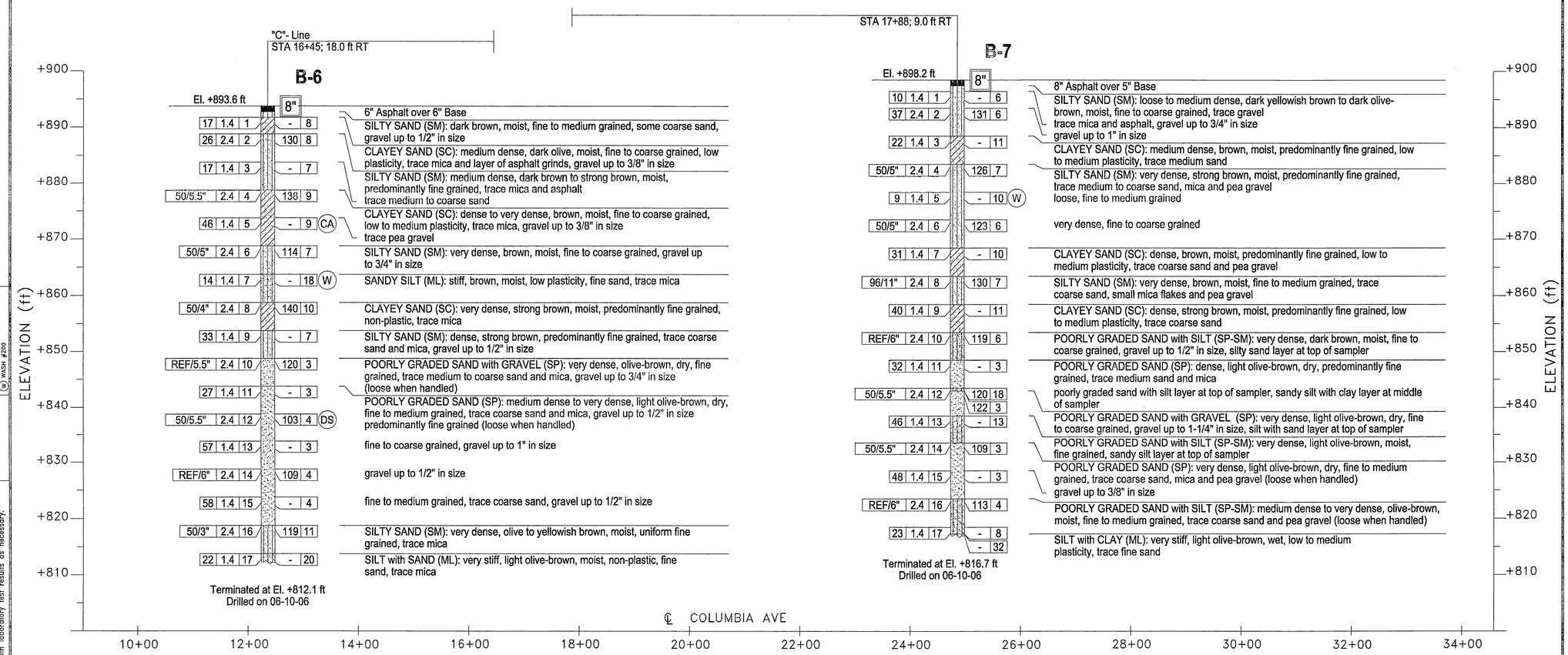

LEGEND OF BORING OPERATIONS

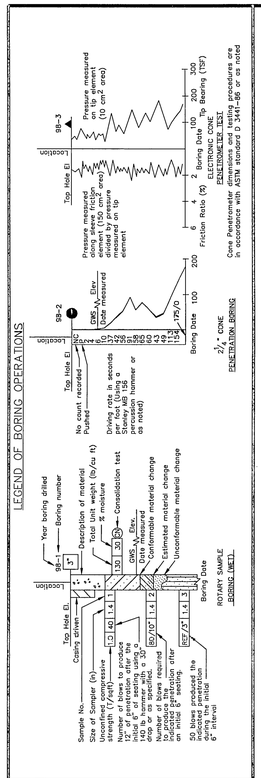

CONSISTENCY CLASSIFICATION FOR SOILS

According to the Standard Penetration Test (ASTM D-1586)

SPT N-value (blows/ft)	Granular
0 – 4	Very Loose
5 – 10	Loose
11 – 30	Medium Dense
31 – 50	Dense
> 50	Very Dense

SPT N-value (blows/ft)	Cohesive
< 2	Very Soft
2 – 4	Soft
5 – 8	Firm
9 – 15	Stiff
16 – 30	Very Stiff
> 31	Hard

LEGEND OF EARTH MATERIALS (USCS) BASED ON ASTM D2487, D2488

- FILL MATERIAL
- CLAY (CL or CH)
- SILT (ML or MH)
- PEAT and/or HIGHLY ORGANIC
- POORLY-GRADED SAND (SP)
- WELL-GRADED SAND (SW)
- SILTY SAND (SM) or SANDY SILT
- CLAYEY SAND (SC) or SANDY CLAY
- COBBLES/BOULDERS
- IGNEOUS ROCK
- SEDIMENTARY ROCK
- METAMORPHIC ROCK
- POORLY-GRADED GRAVEL (GP)
- WELL-GRADED GRAVEL (GW)
- SILTY GRAVEL (GM)
- CLAYEY GRAVEL (GC)

TYPE OF BORINGS

- 2¼" CONE PENETRATION
- ROTARY WASH
- ELECTRONIC CONE PENETROMETER
- AUGER BORING (DRY)
- TEST PIT
- DIAMOND CORE BORING
- SOIL TUBE

IN-SITU, LAB & FIELD TEST DESIGNATIONS

- AT ATTERBERG LIMITS
- CA CHEMICAL ANALYSIS
- CN CONSOLIDATION
- CU CONSOLIDATED UNDRAINED TRIAXIAL
- DS DIRECT SHEAR
- MD MAX. DRY DENSITY
- HY HYDROMETER
- SA SIEVE ANALYSIS
- SE SAND EQUIVALENT
- UC UNCONFINED COMPRESSION
- UU UNCONSOLIDATED UNDRAINED TRIAXIAL
- W WASH #200

Note: Visual classification of earth materials are based on field inspection and are confirmed or revised with laboratory test results as necessary.

PROFILE

VERTICAL 1"=20'
HORIZONTAL 1"=200'

AS BUILT
DATE 9-14-10

Earth Mechanics, Inc.
Geotechnical and Earthquake Engineering
17660 Newhope Street, Suite E
Fountain Valley, California 92708
Phone: 714-751-3826
Fax: 714-751-3928

REGISTERED PROFESSIONAL ENGINEER
LINO CHEANG
NO. GE 2345
EXP. 09/30/09
GEOTECHNICAL
STATE OF CALIFORNIA

MARK	REVISIONS	APPR.	DATE

DESIGNED BY MT DRAWN BY MT CHECKED BY LCC

COLUMBIA AVENUE OVERPASS AT BNSF RAILROAD

LOG OF TEST BORINGS
NO. 1 OF 3

SCALE: AS SHOWN

ACCT. NO.
R-4036
S-29
SHEET 73 OF 103
BRIDGE # 56C0572

DWG: P:\60004223 Columbia Grade Sep\CADD\Struct\Sheet\BRIDGE\ST-29.dwg
TIME: 7-15-08 – 7:37am USER: Landase XRef Files:

PLAN

1" = 100'

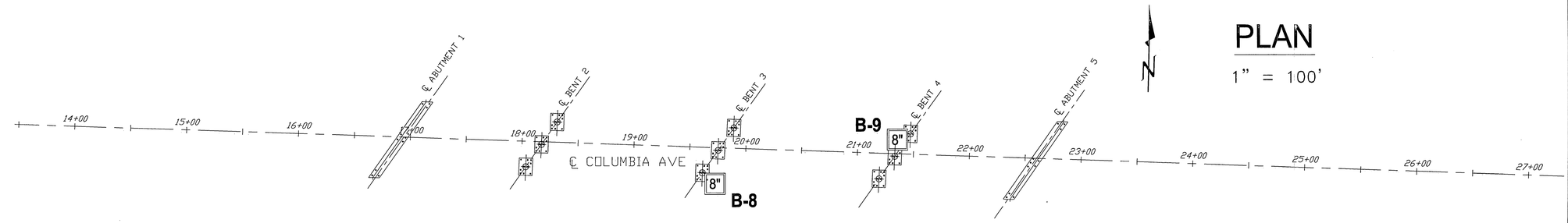

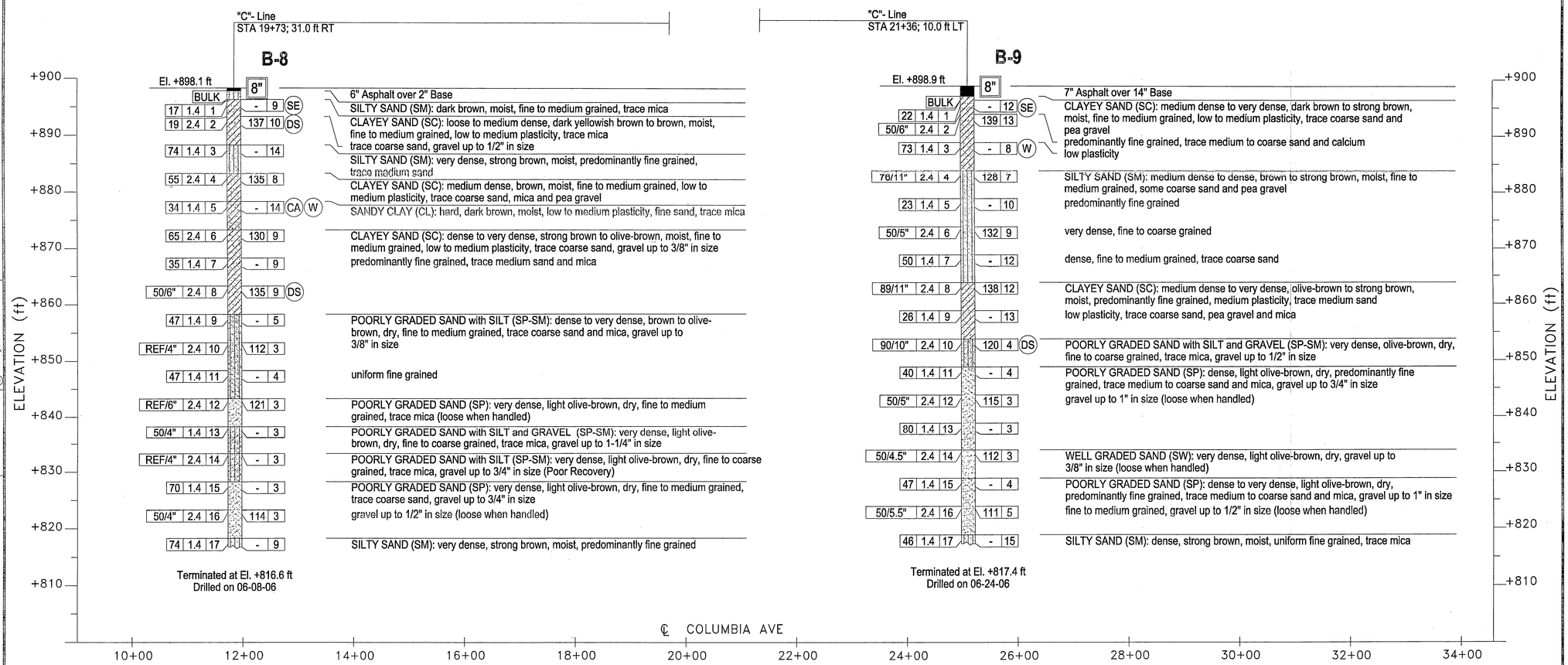

PROFILE

VERTICAL 1"=20'
HORIZONTAL 1"=200'

AS BUILT
DATE 9-14-10

LEGEND OF BORING OPERATIONS

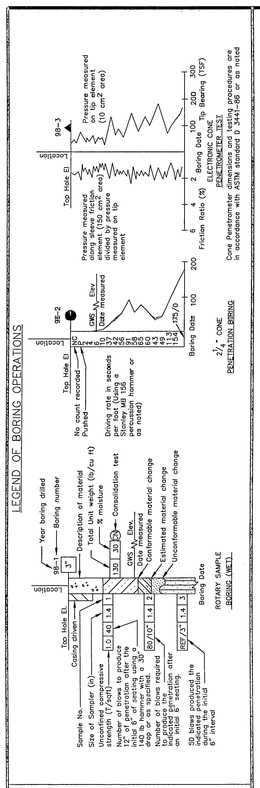

IN-SITU, LAB & FIELD TEST DESIGNATIONS

- (AL) ATTERBERG LIMITS
- (CA) CHEMICAL ANALYSIS
- (CN) CONSOLIDATION
- (CT) CONSOLIDATED UNDRAINED TRIAXIAL
- (DS) DIRECT SHEAR
- (MD) MAX. DRY DENSITY
- (HY) HYDROMETER
- (SA) SIEVE ANALYSIS
- (SE) SAND EQUIVALENT
- (UC) UNCONFINED COMPRESSION
- (UU) UNCONSOLIDATED UNDRAINED TRIAXIAL
- (W) WASH #200

TYPE OF BORINGS

- 2¼" CONE PENETRATION
- ROTARY WASH
- ELECTRONIC CONE PENETROMETER
- AUGER BORING (DRY)
- TEST PIT
- DIAMOND CORE BORING
- SOIL TUBE

LEGEND OF EARTH MATERIALS (USCS) BASED ON ASTM D2487, D2488

- FILL MATERIAL
- CLAY (CL or CH)
- SILT (ML or MH)
- PEAT and/or ORGANIC MATTER
- POORLY-GRADED SAND (SP)
- WELL-GRADED SAND (SW)
- SILTY SAND (SM) or SANDY SILT
- CLAYEY SAND (SC) or SANDY CLAY
- COBBLES/BOULDERS
- WELL-GRADED GRAVEL (GW)
- POORLY-GRADED GRAVEL (GP)
- SILTY GRAVEL (GM)
- CLAYEY GRAVEL (GC)
- IGNEOUS ROCK
- SEDIMENTARY ROCK
- METAMORPHIC ROCK

Note: Visual classification of earth materials are based on field inspection and are confirmed or revised with laboratory test results as necessary.

CONSISTENCY CLASSIFICATION FOR SOILS

According to the Standard Penetration Test (ASTM D-1586)

SPT N-value (blows/ft)	Granular	SPT N-value (blows/ft)	Cohesive
0 – 4	Very Loose	< 2	Very Soft
5 – 10	Loose	2 – 4	Soft
11 – 30	Medium Dense	5 – 8	Firm
31 – 50	Dense	9 – 15	Stiff
> 50	Very Dense	16 – 30	Very Stiff
		> 31	Hard

Earth Mechanics, Inc.
Geotechnical and Earthquake Engineering
17660 Newhope Street, Suite E
Fountain Valley, California 92708
Phone: 714-751-3826
Fax: 714-751-3928

REGISTERED PROFESSIONAL ENGINEER
Lino Cheang
LINO CHEANG
NO. GE 2345
EXP. 09/30/09
GEOTECHNICAL
STATE OF CALIFORNIA

MARK	REVISIONS	APPR.	DATE

DESIGNED BY MT DRAWN BY MT CHECKED BY LCC

COLUMBIA AVENUE OVERPASS AT BNSF RAILROAD

LOG OF TEST BORINGS
NO. 2 OF 3

SCALE: AS SHOWN

ACCT. NO.
R-4036
S-30
SHEET 74 OF 103

BRIDGE # 56C0572

PLAN

1" = 100'

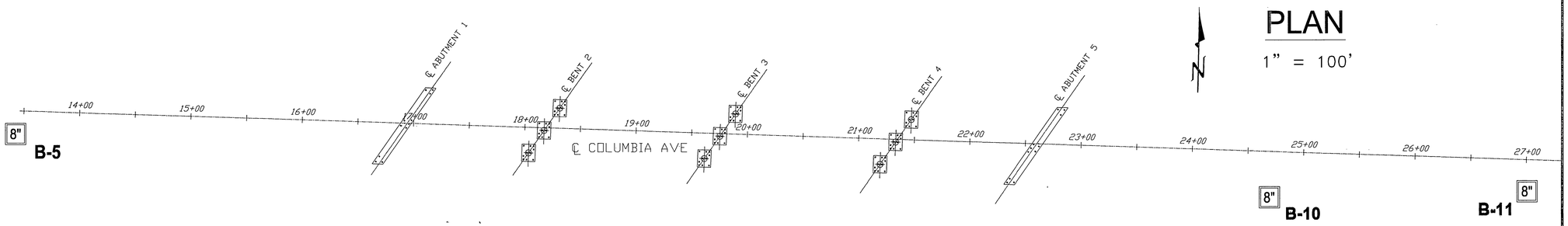

PROFILE

VERTICAL 1"=20'
HORIZONTAL 1"=200'

AS BUILT
DATE 9-14-10

LEGEND OF BORING OPERATIONS

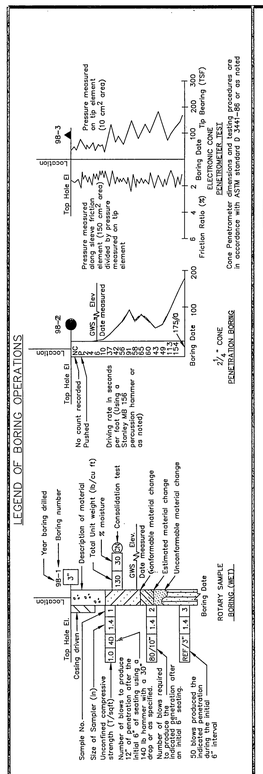

LEGEND OF EARTH MATERIALS (USCS) BASED ON ASTM D2487, D2488

- FILL MATERIAL
- CLAY (CL or CH)
- SILT (ML or MH)
- PEAT and/or ORGANIC MATTER
- WELL-GRADED GRAVEL (GW)
- POORLY-GRADED GRAVEL (GP)
- SILTY GRAVEL (GM)
- CLAYEY GRAVEL (GC)
- POORLY-GRADED SAND (SP)
- WELL-GRADED SAND (SW)
- SILTY SAND (SM) or SANDY SILT
- CLAYEY SAND (SC) or SANDY CLAY
- COBBLES/BOULDERS
- IGNEOUS ROCK
- SEDIMENTARY ROCK
- METAMORPHIC ROCK

TYPE OF BORINGS

- 2¼" CONE PENETRATION
- ROTARY WASH
- ELECTRONIC CONE PENETROMETER
- AUGER BORING (DRY)
- TEST PIT
- DIAMOND CORE BORING
- SOIL TUBE

IN-SITU, LAB & FIELD TEST DESIGNATIONS

- AT ATTERBERG LIMITS
- CA CHEMICAL ANALYSIS
- CN CONSOLIDATION
- CU CONSOLIDATED UNDRAINED TRIAXIAL
- DS DIRECT SHEAR
- MD MAX. DRY DENSITY
- HY HYDROMETER
- SA SIEVE ANALYSIS
- SE SAND EQUIVALENT
- UC UNCONFINED COMPRESSION
- CD UNCONSOLIDATED UNDRAINED TRIAXIAL
- W WASH #200

CONSISTENCY CLASSIFICATION FOR SOILS

According to the Standard Penetration Test (ASTM D-1586)

SPT N-value (blows/ft)	Granular	SPT N-value (blows/ft)	Cohesive
0 – 4	Very Loose	< 2	Very Soft
5 – 10	Loose	2 – 4	Soft
11 – 30	Medium Dense	5 – 8	Firm
31 – 50	Dense	9 – 15	Stiff
> 50	Very Dense	16 – 30	Very Stiff
		> 31	Hard

Note: Visual classification of earth materials are based on field inspection and are confirmed or revised with laboratory test results as necessary.

Earth Mechanics, Inc.
Geotechnical and Earthquake Engineering
17660 Newhope Street, Suite E
Fountain Valley, California 92708
Phone: 714-751-3826
Fax: 714-751-3928

REGISTERED PROFESSIONAL ENGINEER
LINO CHEANG
NO. GE 2345
EXP. 09/30/09
GEOTECHNICAL
STATE OF CALIFORNIA

MARK	REVISIONS	APPR.	DATE

DESIGNED BY MT DRAWN BY MT CHECKED BY LCC

COLUMBIA AVENUE OVERPASS AT BNSF RAILROAD

LOG OF TEST BORINGS
NO. 3 OF 3

SCALE: AS SHOWN

ACCT. NO.
R-4036
S-31
SHEET 75 OF 103

BRIDGE # 56C0572

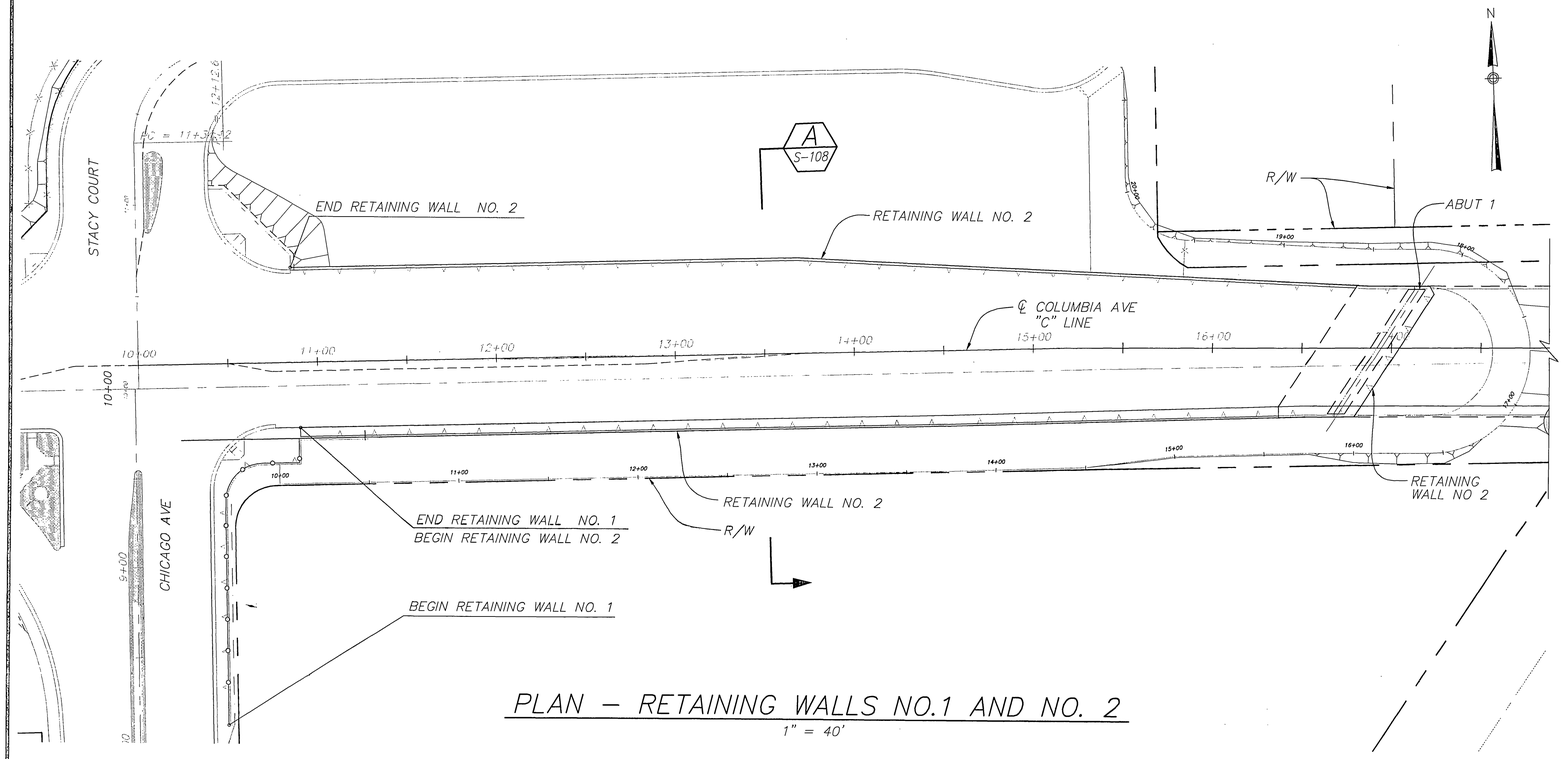

PLAN – RETAINING WALLS NO.1 AND NO. 2

1" = 40'

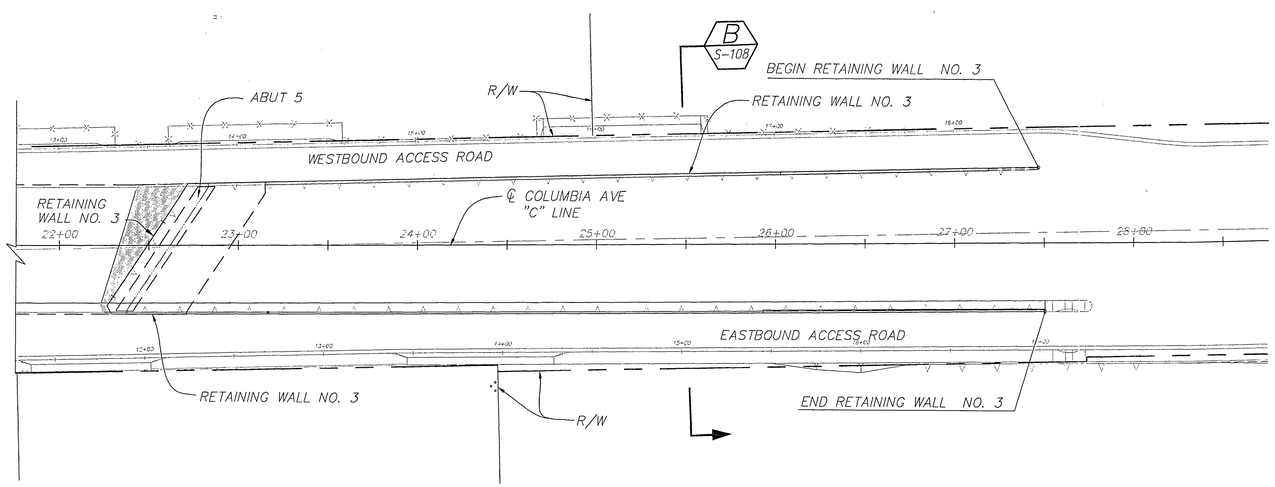

PLAN – RETAINING WALL NO. 3

1" = 40'

AS BUILT
DATE 9-14-10

MSE WALL NOTES

MSE WALL SHALL BE DESIGNED IN ACCORDANCE WITH THE CURRENT EDITION OF THE CALTRANS BRIDGE DESIGN SPECIFICATIONS AND RECOMMENDATIONS IN THE PROJECT FOUNDATION REPORT.

DESIGN CRITERIA: CALTRANS BRIDGE DESIGN SPECIFICATIONS, APRIL 2000 WITH UPDATED SECTION 5 "RETAINING WALLS" AUGUST 2004 WITH DESIGN LIFE = 100 YEARS.

SOIL PARAMETERS FOR RETAINING WALLS NO. 2 & NO. 3:

SITE PEAK ROCK ACCELARATION: 0.5g

LIVE LOADING = HS20-44 AND ALTERNATIVE AND PERMIT DESIGN LOAD

PARAMETER	MSE STRUCTURAL BACKFILL	BACKFILL	FOUNDATION SOIL
SOIL FRICTION ANGLE	34°	34°	----
SOIL UNIT WEIGHT	120 LBS/FT^3	120 LBS/FT^3	----
SLIDING FRICTION COEFFICIENT	----	----	0.5
ULTIMATE BEARING	----	----	6900 LBS/FT^2

REFER TO THE FOUNDATION REPORT PREPARED BY EARTH MECHANIC, INC. DATED JUNE 25, 2008 FOR SITE-SPECIFIC SOILS DATA AND ADDITIONAL FOUNDATION DESIGN RECOMMENDATIONS. THIS INFORMATION TOGETHER WITH THE TOLERABLE WALL MOVEMENTS ESTABLISHED BY THE WALL VENDOR/DESIGNER MAY INCREASE OR DECREASE THE ULTIMATE BEARING CAPACITY VALUE SHOWN ABOVE.

THE CONTRACTOR SHALL SUBMIT TO THE ENGINEER FOR APPROVAL SHOP DRAWINGS AND CALCULATIONS FOR MSE WALLS SIGNED BY A CIVIL ENGINEER REGISTERED IN THE STATE OF CALIFORNIA.

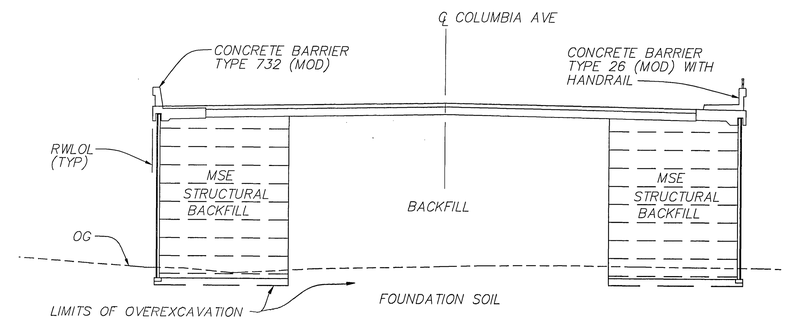

TYPICAL SECTION & SOIL DESCRIPTION

NO SCALE

RETAINING WALL DRAWING INDEX

DRAWING NUMBER	TITLE
S-100	RETAINING WALLS – GENERAL PLAN
S-101	RETAINING WALL NO. 1 – LAYOUT & DETAILS
S-102	RETAINING WALL NO. 2 – WALL LAYOUT NO. 1
S-103	RETAINING WALL NO. 2 – WALL LAYOUT NO. 2
S-104	RETAINING WALL NO. 2 – WALL LAYOUT NO. 3
S-105	RETAINING WALL NO. 3 – WALL LAYOUT NO. 1
S-106	RETAINING WALL NO. 3 – WALL LAYOUT NO. 2
S-107	RETAINING WALL NO. 3 – WALL LAYOUT NO. 3
S-108	MSE RETAINING WALL SECTIONS
S-109	MSE RETAINING WALL DETAILS NO. 1
S-110	MSE RETAINING WALL DETAILS NO. 2
S-111	RETAINING WALL NO. 2 – ARCHITECTURAL DETAILS NO. 1
S-112	RETAINING WALL NO. 3 – ARCHITECTURAL DETAILS NO. 2
S-113	MSE RETAINING WALL – ARCHITECTURAL DETAILS NO. 3

GRAPHIC SCALE: 40' 20' 0 80' 40' HORIZ 1" = 40'

DMJM HARRIS | AECOM
800 NORTH HAVEN, SUITE 410
ONTARIO, CA 91764
T (909)291-8150 F (909)291-8166

REGISTERED PROFESSIONAL ENGINEER JOHN LEIMBEKER No. C65950 Exp. 6-30-10 CIVIL STATE OF CALIFORNIA

MARK	REVISIONS	APPR.	DATE
1	DELETED NOTE	JL	08/18/08

DESIGNED BY JL DRAWN BY LR CHECKED BY JW

1 NOT FOR CONSTRUCTION

COLUMBIA AVENUE OVERPASS AT BNSF RAILROAD

RETAINING WALL
GENERAL PLAN

SCALE: AS SHOWN

ACCT. NO. R-4036

S-100

SHEET 76 OF 103

DWG: P:\60004223 Columbia Grade Sep\CADD\Struct\Sheet\BRIDGE\ST-100.dwg
TIME: 8-18-08 – 2:46pm User: LandasE XRef Files: P:\60004223 Coumbial Grade Sep\CADD\Civil\Ref\xtopo.dwg ..\..\..\civil\ref\xrow_ex.dwg P:\60004223 Coumbial Grade Sep\CADD\Civil\Ref\xutil_ex.dwg P:\60004223 Coumbial Grade Sep\CADD\Civil\Ref\xsurvey.dwg P:\6000-

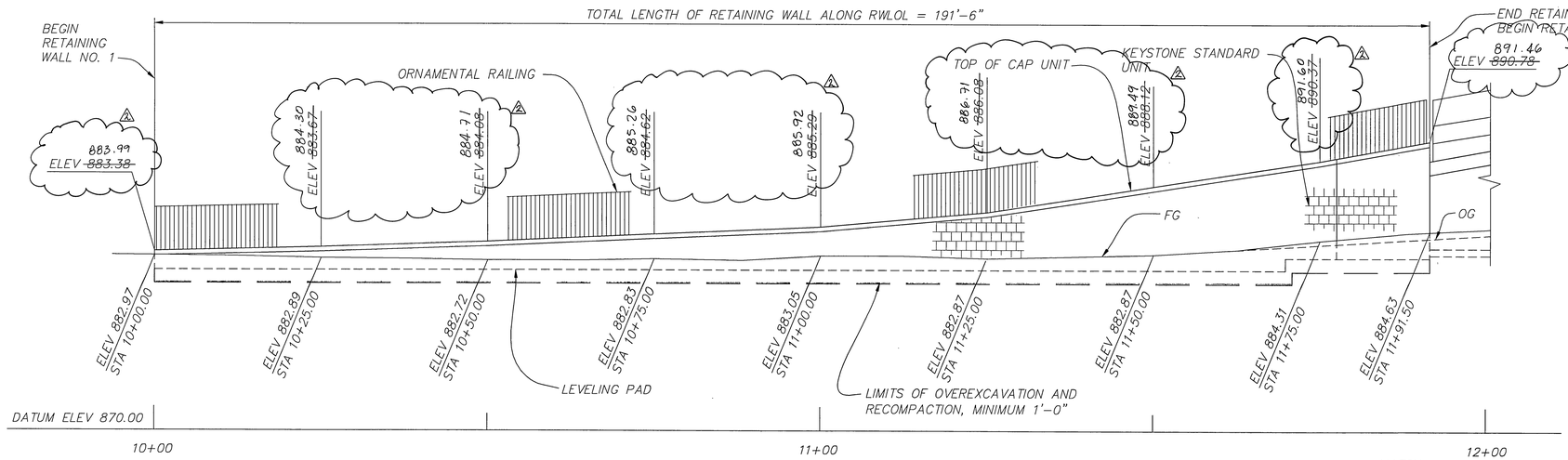

DEVELOPED ELEVATION

HORIZ : 1" = 10'
VERT : 1" = 5'

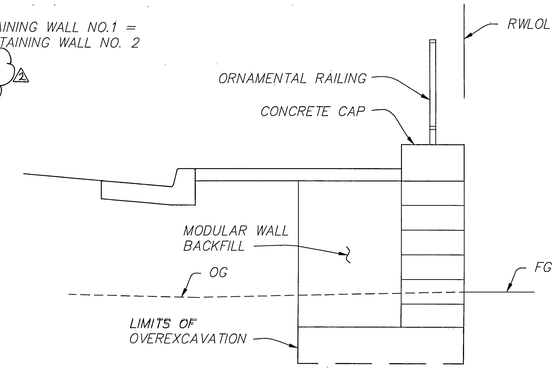

TYPICAL SECTION

1/2" = 1'-0"

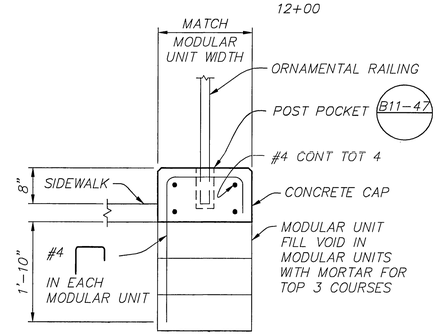

CONCRETE CAP DETAIL

3/4" = 1'-0"

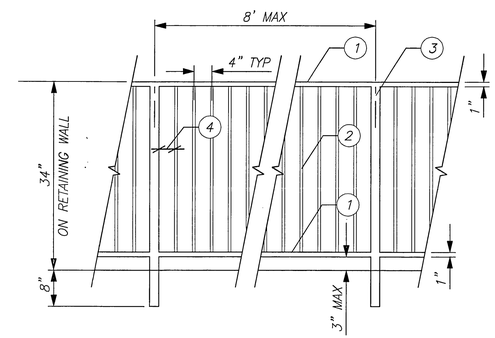

ORNAMENTAL RAILING DETAIL

3/4" = 1'-0"

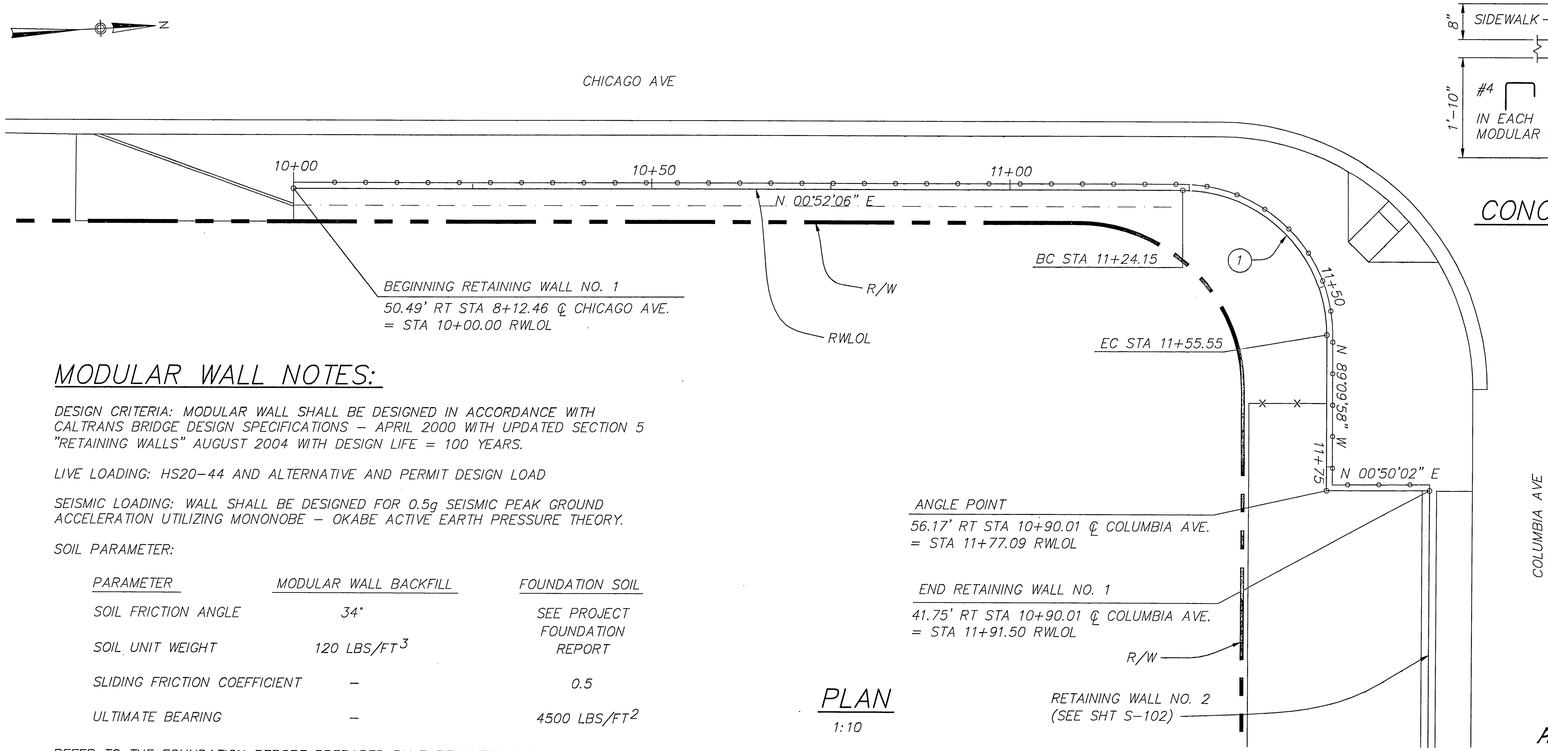

PLAN

1:10

MODULAR WALL NOTES:

DESIGN CRITERIA: MODULAR WALL SHALL BE DESIGNED IN ACCORDANCE WITH CALTRANS BRIDGE DESIGN SPECIFICATIONS – APRIL 2000 WITH UPDATED SECTION 5 "RETAINING WALLS" AUGUST 2004 WITH DESIGN LIFE = 100 YEARS.

LIVE LOADING: HS20-44 AND ALTERNATIVE AND PERMIT DESIGN LOAD

SEISMIC LOADING: WALL SHALL BE DESIGNED FOR 0.5g SEISMIC PEAK GROUND ACCELERATION UTILIZING MONONOBE – OKABE ACTIVE EARTH PRESSURE THEORY.

SOIL PARAMETER:

PARAMETER	MODULAR WALL BACKFILL	FOUNDATION SOIL
SOIL FRICTION ANGLE	34°	SEE PROJECT FOUNDATION REPORT
SOIL UNIT WEIGHT	120 LBS/FT^3	
SLIDING FRICTION COEFFICIENT	–	0.5
ULTIMATE BEARING	–	4500 LBS/FT^2

REFER TO THE FOUNDATION REPORT PREPARED BY EARTH MECHANIC, INC. DATED JUNE 25, 2008 FOR SITE-SPECIFIC SOILS DATA AND ADDITIONAL FOUNDATION DESIGN RECOMMENDATIONS. THIS INFORMATION TOGETHER WITH THE TOLERABLE WALL MOVEMENTS ESTABLISHED BY THE WALL VENDOR/DESIGNER MAY INCREASE OR DECREASE THE ULTIMATE BEARING CAPACITY VALUE SHOWN ABOVE.

THE CONTRACTOR SHALL SUBMIT TO THE ENGINEER FOR APPROVAL SHOP DRAWINGS AND CALCULATIONS FOR MSE WALLS SIGNED BY A CIVIL ENGINEER REGISTERED IN THE STATE OF CALIFORNIA.

ORNAMENTAL RAILING CONSTRUCTION NOTES:

1. TOP & BOTTOM RAIL SHALL BE 1" X 2" TUBULAR STEEL
2. PICKETS SHALL BE 5/8" X 5/8" TUBULAR STEEL
3. FENCE POSTS SHALL BE 2" X 2" TUBULAR STEEL AT 8' O.C. MAX
4. PICKETS SHALL BE EQUALLY SPACED AT EACH END AND SHALL NOT BE LESS THAN 2". PICKET SPACING SHALL BE EQUALLY SPACED OVER ENTIRE PANEL LENGTH AND SHALL NOT EXCEED 4" O.C. OR BE LESS THAN 3½" O.C.

ORNAMENTAL RAILING GENERAL NOTES:

1. ALL STEEL SHALL BE 14 GAUGE.
2. CONTINUOUS WELD ALL CONNECTIONS.
3. PAINT ALL EXPOSED STEEL W/ (1) PRIMER COAT AND (2) FINISH COATS BLACK SATIN, UNLESS NOTED OTHERWISE. STEEL SHALL BE POWDER-COATED.
4. THE CONTRACTOR SHALL SUBMIT SHOP DRAWINGS FOR SINGLE AND DOUBLE GATES FOR APPROVAL PRIOR TO FABRICATION AND INSTALLATION.
5. THE CENTER OF FENCE POSTS SHALL BE AT CENTER OF CONCRETE CAP.

AS BUILT
DATE 9-14-10

CURVE DATA				
NO.	R	Δ	T	L
1	20.00'	89°57'16"	19.99'	31.40'

~~NOT FOR CONSTRUCTION~~

DMJM HARRIS | AECOM
800 NORTH HAVEN, SUITE 410
ONTARIO, CA 91764
T (909)291-8150 F (909)291-8166

REGISTERED PROFESSIONAL ENGINEER JOHN LEIMBACHER No. C65950 Exp. 6-30-10 CIVIL STATE OF CALIFORNIA

MARK	REVISIONS	APPR.	DATE
2	AS BUILT	F.R.	9/14/10
1	DELETED NOTE	JL	08/18/08

DESIGNED BY JL DRAWN BY HC CHECKED BY JW

SCALE: AS SHOWN

COLUMBIA AVENUE OVERPASS AT BNSF RAILROAD

RETAINING WALL NO. 1
LAYOUT AND DETAILS

ACCT. NO. R-4036
S-101
SHEET 77 OF 103

DWG: P:\60004223 Columbia Grade Sep\CADD\Struct\Sheet\BRIDGE\ST-101.dwg
TIME: 8-18-08 – 2:52pm User: LandaseE XRef Files: xbdr-bridge.dwg P:\60004223 Columbia Grade Sep\CADD\Civil\Ref\xrd-colu_project.dwg P:\60004223 Columbia Grade Sep\CADD\Civil\Ref\xrow_ex.dwg P:\60004223 Columbia Grade Sep\CADD\Civil\Ref\xtopo.dwg xrd-colu.dw

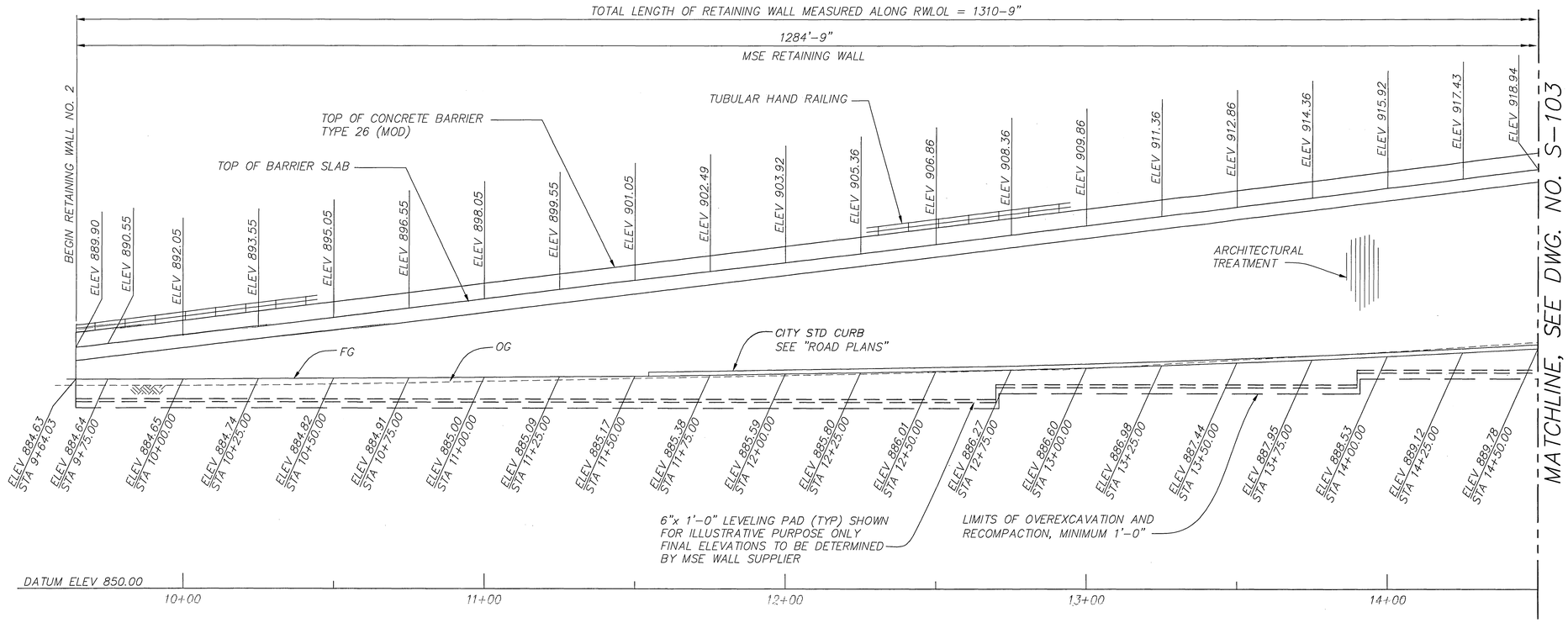

DEVELOPED ELEVATION

HORIZ : 1" = 20'
VERT: 1" = 10'

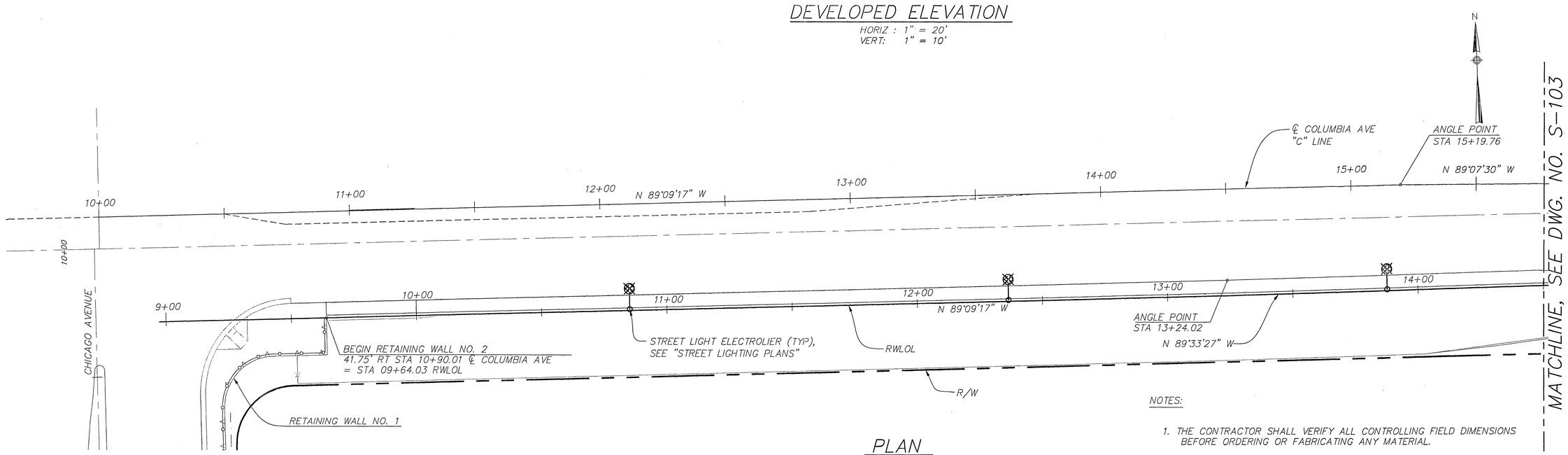

PLAN

1" = 20'

NOTES:

1. THE CONTRACTOR SHALL VERIFY ALL CONTROLLING FIELD DIMENSIONS BEFORE ORDERING OR FABRICATING ANY MATERIAL.
2. TOP OF COPING ELEV VARIES LINEARLY BETWEEN POINTS SHOWN.

NOT FOR CONSTRUCTION

AS BUILT
DATE 9-14-10

GRAPHIC SCALE: 20' 10' 0 20' 40' — 1" = 20' HORIZ

DMJM HARRIS | AECOM
800 NORTH HAVEN, SUITE 410
ONTARIO, CA 91764
T (909)291-8150 F (909)291-8166

REGISTERED PROFESSIONAL ENGINEER — JOHN LEIMBACHER — No. C65950 — Exp. 6-30-10 — CIVIL — STATE OF CALIFORNIA

MARK	REVISIONS	APPR.	DATE
1	DELETED NOTE	JL	08/18/08

DESIGNED BY JL DRAWN BY LR CHECKED BY JW

COLUMBIA AVENUE OVERPASS AT BNSF RAILROAD

RETAINING WALL NO. 2
WALL LAYOUT NO. 1

SCALE: AS SHOWN

ACCT. NO.

R-4036
S-102

SHEET 78 OF 103

DWG: P:\60004223 Columbia Grade Sep\CADD\Struct\Sheet\BRIDGE\ST-102.dwg
TIME: 8-18-08 - 2:46pm User: LandosE XRef Files: x-bridge-columbia-s.dwg xbdr-bridge.dwg xMse wall-lay.dwg XMsewall-Elev.dwg P:\60004223 Columbia Grade Sep\CADD\Civil\Ref\xutil_pro.dwg xrow_final.dwg xrd-colu.dwg X-ELECTRICAL2.dwg

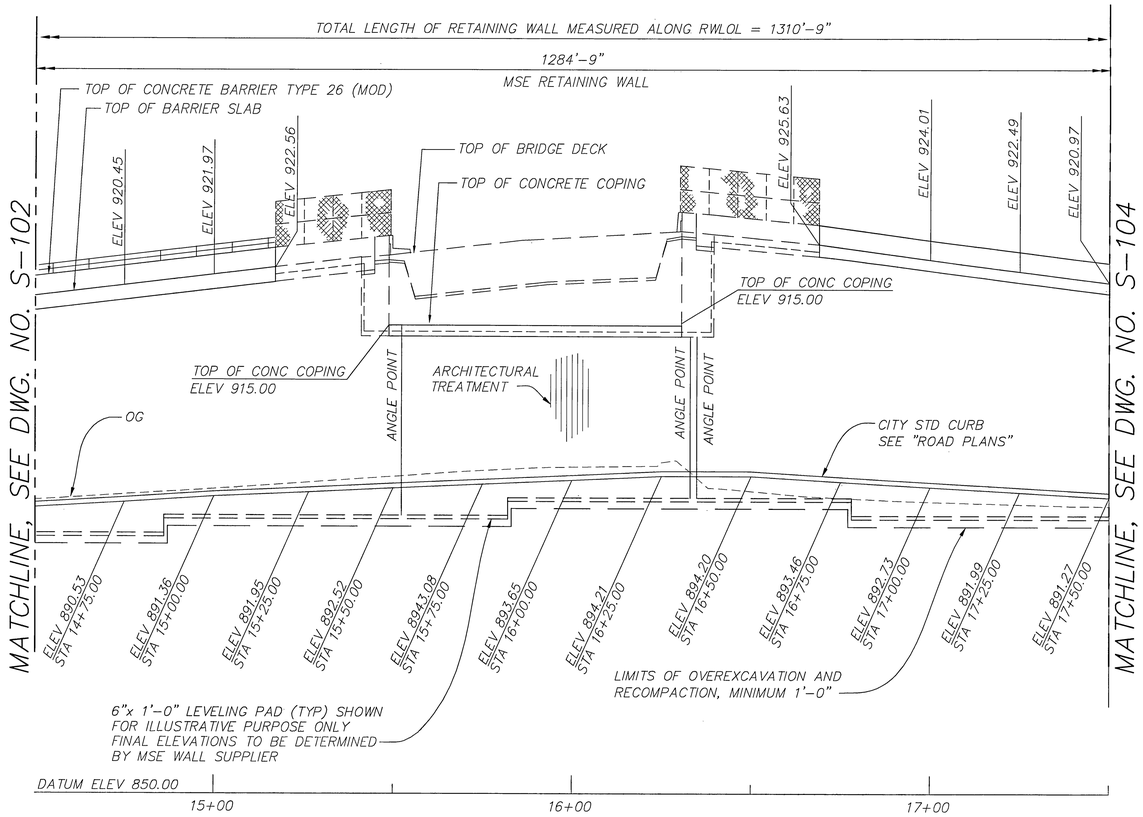

DEVELOPED ELEVATION

HORIZ : 1" = 20'
VERT: 1" = 10'

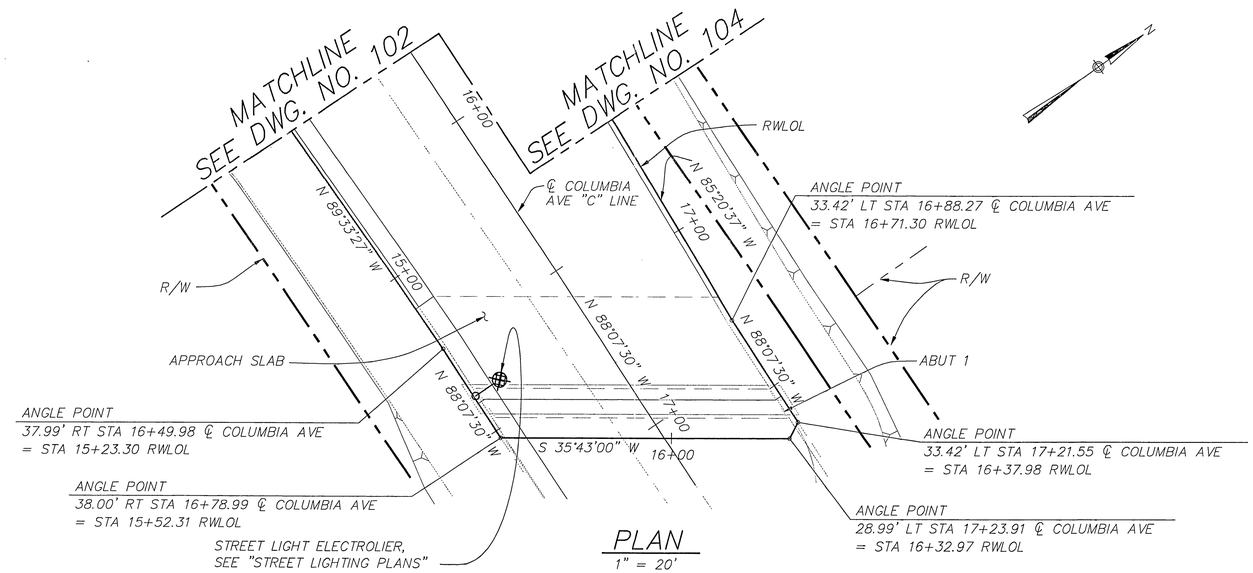

PLAN

1" = 20'

NOTE:

1. SEE NOTES ON SHEET S-102.

AS BUILT
DATE 9-14-10

20' 10' 0 20' 40'
GRAPHIC SCALE: 1" = 20' HORIZ

NOT FOR CONSTRUCTION

DMJM HARRIS | AECOM
800 NORTH HAVEN, SUITE 410
ONTARIO, CA 91764
T (909)291-8150 F (909)291-8166

REGISTERED PROFESSIONAL ENGINEER JOHN LEIMBACHER No. C65950 Exp. 6-30-10 CIVIL STATE OF CALIFORNIA

MARK	REVISIONS	APPR.	DATE
1	DELETED NOTE	JL	08/18/08

DESIGNED BY JL DRAWN BY LR CHECKED BY JW

COLUMBIA AVENUE OVERPASS AT BNSF RAILROAD

RETAINING WALL NO. 2
WALL LAYOUT NO. 2

SCALE: AS SHOWN

ACCT. NO.
R-4036
S-103
SHEET 79 OF 103

DWG: P:\60004223 Columbia Grade Sep\CADD\Struct\Sheet\BRIDGE\ST-103.dwg
TIME: 8-18-08 – 2:46pm User: LandaseE XRef Files: xMse wall-lay.dwg XMsewall-Elev.dwg xbdr-bridge.dwg P:\60004223 Columbia Grade Sep\CADD\Struct\Ref\X-BRIDGE-COLUMBIA-S.dwg xrow_final.dwg xrd-colu.dwg X-ELECTRICAL2.dwg

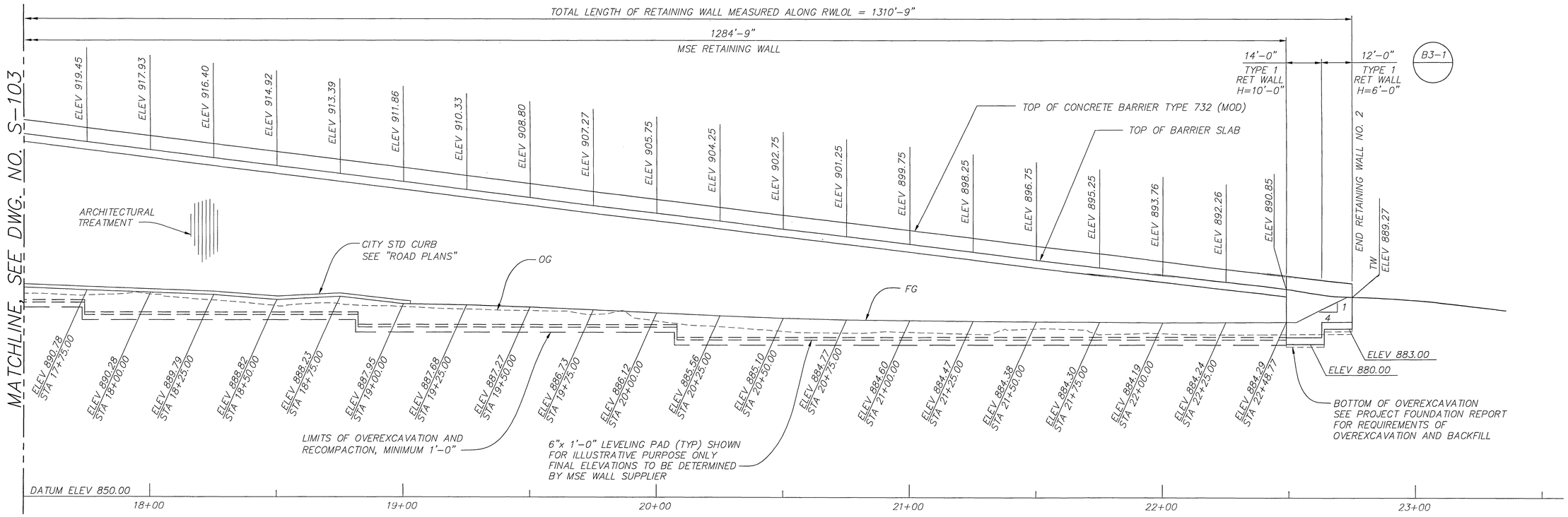

DEVELOPED ELEVATION

HORIZ : 1" = 20'
VERT: 1" = 10'

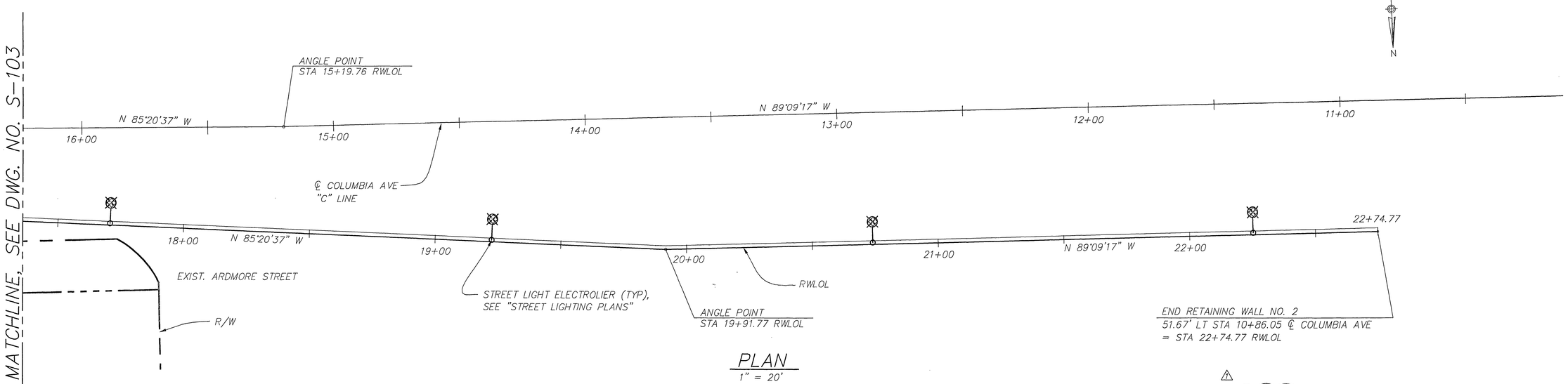

PLAN

1" = 20'

NOTE:

1. SEE NOTES ON SHEET S-102.

AS BUILT
DATE 9-14-10

NOT FOR CONSTRUCTION

20' 10' 0 20' 40'
GRAPHIC SCALE: 1" = 20' HORIZ

DMJM HARRIS | AECOM
800 NORTH HAVEN, SUITE 410
ONTARIO, CA 91764
T (909)291-8150 F (909)291-8166

REGISTERED PROFESSIONAL ENGINEER JOHN LEIMBACHER No. 065950 Exp. 6-30-10 CIVIL STATE OF CALIFORNIA

MARK	REVISIONS	APPR.	DATE
1	DELETED NOTE	JL	08/18/08

DESIGNED BY JL DRAWN BY LR CHECKED BY JW

COLUMBIA AVENUE OVERPASS AT BNSF RAILROAD

RETAINING WALL NO. 2
WALL LAYOUT NO. 3

SCALE: AS SHOWN

ACCT. NO.

R-4036
S-104

SHEET 80 OF 103

DWG: P:\60004223 Columbia Grade Sep\CADD\Struct\Sheet\BRIDGE\ST-104.dwg
TIME: 8-18-08 - 2:46pm User: LandaseE XRef Files: x-bridge-columbia-s.dwg xbdr-bridge.dwg xMse wall-lay.dwg XMsewall-Elev.dwg P:\60004223 Columbia Grade Sep\CADD\Civil\Ref\xrow_final.dwg X-ELECTRICAL2.dwg

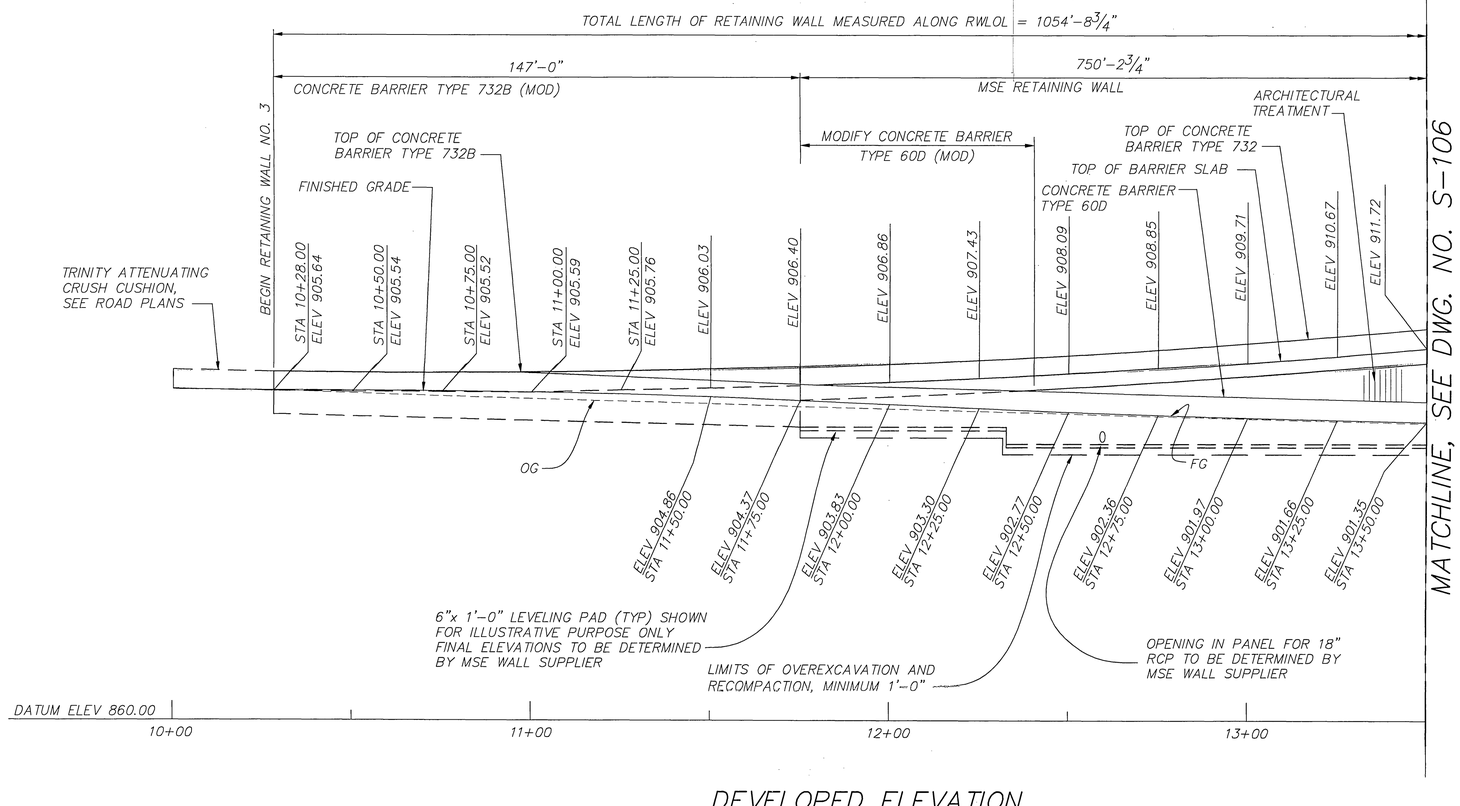

DEVELOPED ELEVATION

HORIZ : 1" = 20'
VERT: 1" = 10'

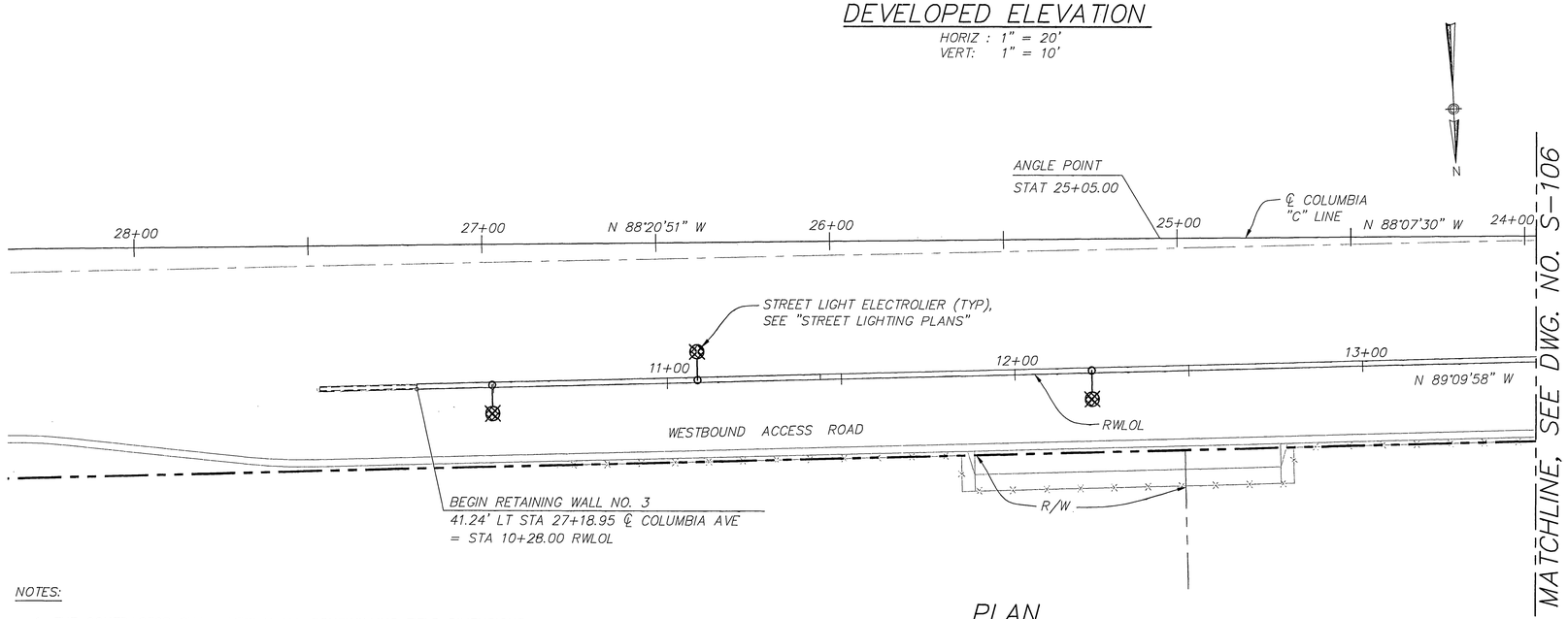

PLAN

1" = 20'

NOTES:

1. THE CONTRACTOR SHALL VERIFY ALL CONTROLLING FIELD DIMENSIONS BEFORE ORDERING OR FABRICATING ANY MATERIAL.
2. TOP OF COPING ELEV VARIES LINEARLY BETWEEN POINTS SHOWN.

AS BUILT
DATE 9-14-10

GRAPHIC SCALE: 20' 10' 0 20' 40' HORIZ
1" = 20'

DMJM HARRIS | AECOM
800 NORTH HAVEN, SUITE 410
ONTARIO, CA 91764
T (909)291-8150 F (909)291-8166

REGISTERED PROFESSIONAL ENGINEER JOHN LEIMBACHER No. C65950 Exp. 6-30-10 CIVIL STATE OF CALIFORNIA

MARK	REVISIONS	APPR.	DATE
1	DELETED NOTE	JL	08/18/08

DESIGNED BY JL DRAWN BY LR CHECKED BY JW

NOT FOR CONSTRUCTION

COLUMBIA AVENUE OVERPASS AT BNSF RAILROAD

RETAINING WALL NO. 3
WALL LAYOUT NO. 1

SCALE: AS SHOWN

ACCT. NO.
R-4036
S-105
SHEET 81 OF 103

DWG: P:\60004223 Columbia Grade Sep\CADD\Struct\Sheet\BRIDGE\ST-105.dwg xbdr-bridge.dwg xMse wall-lay.dwg XMsewall-Elev.dwg xrow_final.dwg xrd-colu.dwg X-ELECTRICAL2.dwg
TIME: 8-18-08 - 2:46pm User: LandaseE XRef Files: x-bridge-columbia-s.dwg

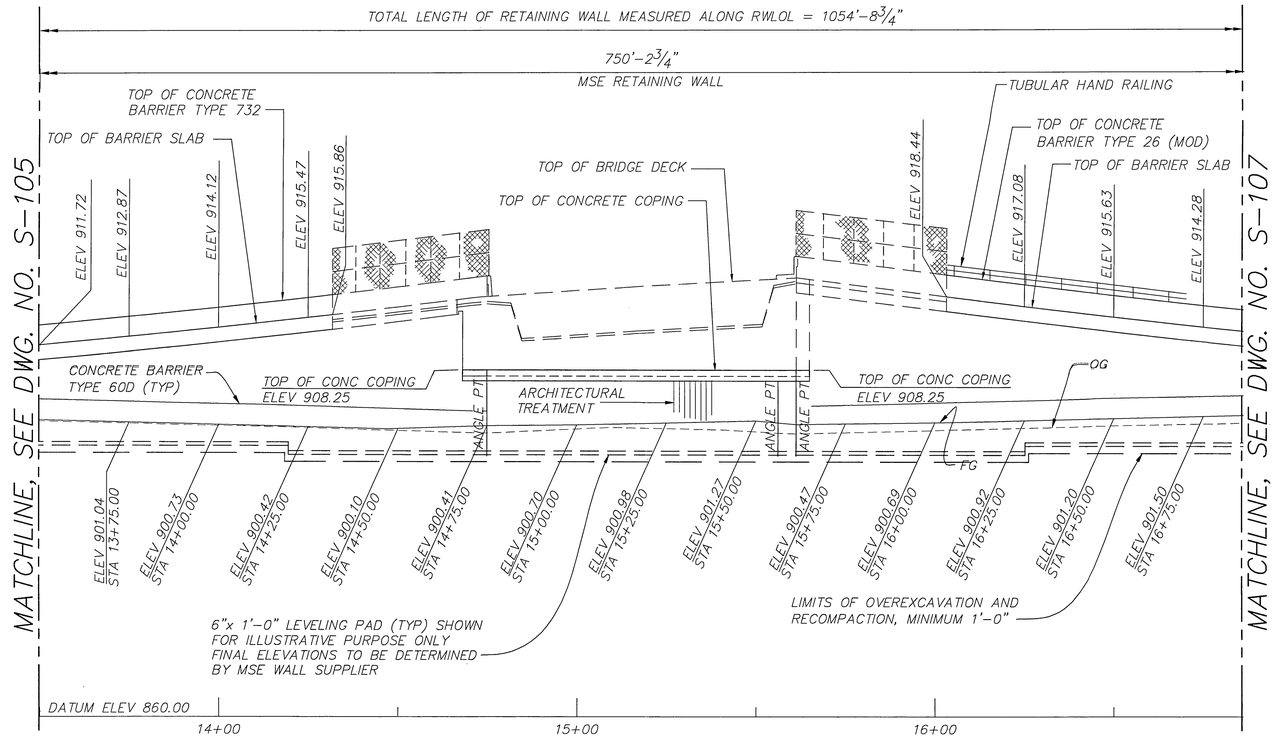

DEVELOPED ELEVATION

HORIZ : 1" = 20'
VERT: 1" = 10'

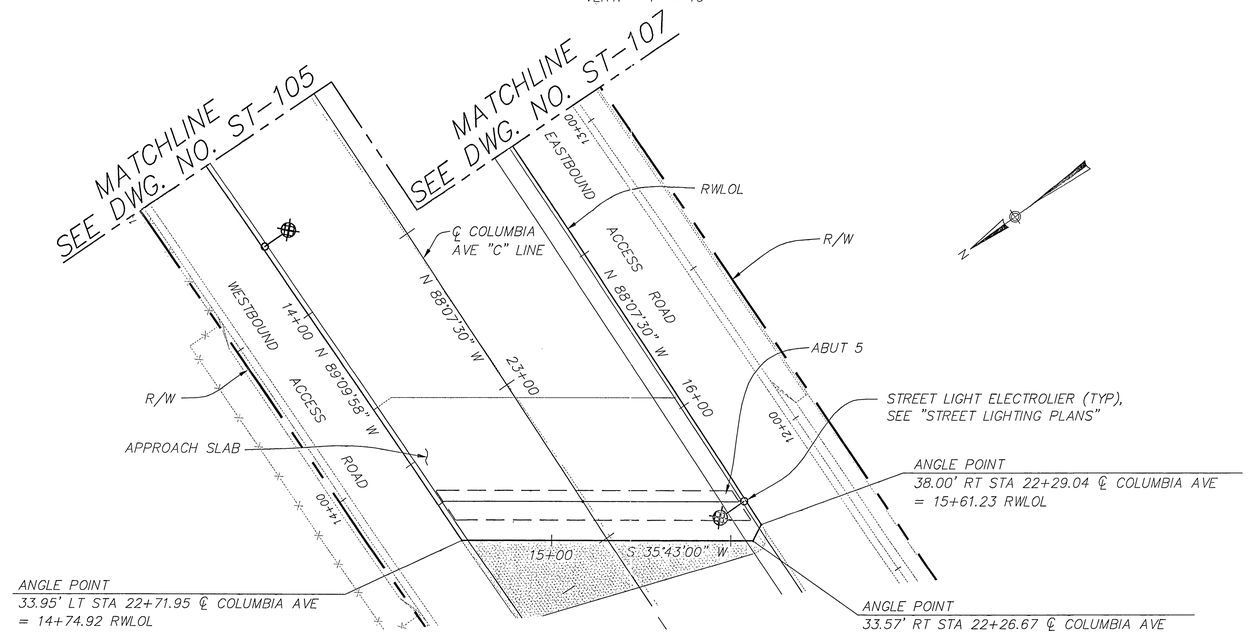

PLAN

1" = 20'

NOTE:

1. SEE NOTES ON SHEET S-105.

AS BUILT
DATE 9-14-10

20' 10' 0 20' 40'
GRAPHIC SCALE: 1" = 20' HORIZ

DMJM HARRIS | AECOM
800 NORTH HAVEN, SUITE 410
ONTARIO, CA 91764
T (909)291-8150 F (909)291-8166

REGISTERED PROFESSIONAL ENGINEER JOHN LEIMBACHER No. C65950 Exp. 6-30-10 CIVIL STATE OF CALIFORNIA

MARK	REVISIONS	APPR.	DATE
1	DELETED NOTE	JL	08/18/08

DESIGNED BY JL DRAWN BY LR CHECKED BY JW

~~NOT FOR CONSTRUCTION~~

COLUMBIA AVENUE OVERPASS AT BNSF RAILROAD

RETAINING WALL NO. 3
WALL LAYOUT NO. 2

SCALE: AS SHOWN

ACCT. NO.
R-4036
S-106
SHEET 82 OF 103

DWG: P:\60004223 Columbia Grade Sep\CADD\Struct\Sheet\BRIDGE\ST-106.dwg
TIME: 8-18-08 - 2:46pm User: LandaseE XRef Files: xMse wall-lay.dwg XMsewall-Elev.dwg xbdr-bridge.dwg ..\..\ref\x-bridge-columbia-s.dwg xrow_final.dwg xrd-colu.dwg X-ELECTRICAL2.dwg

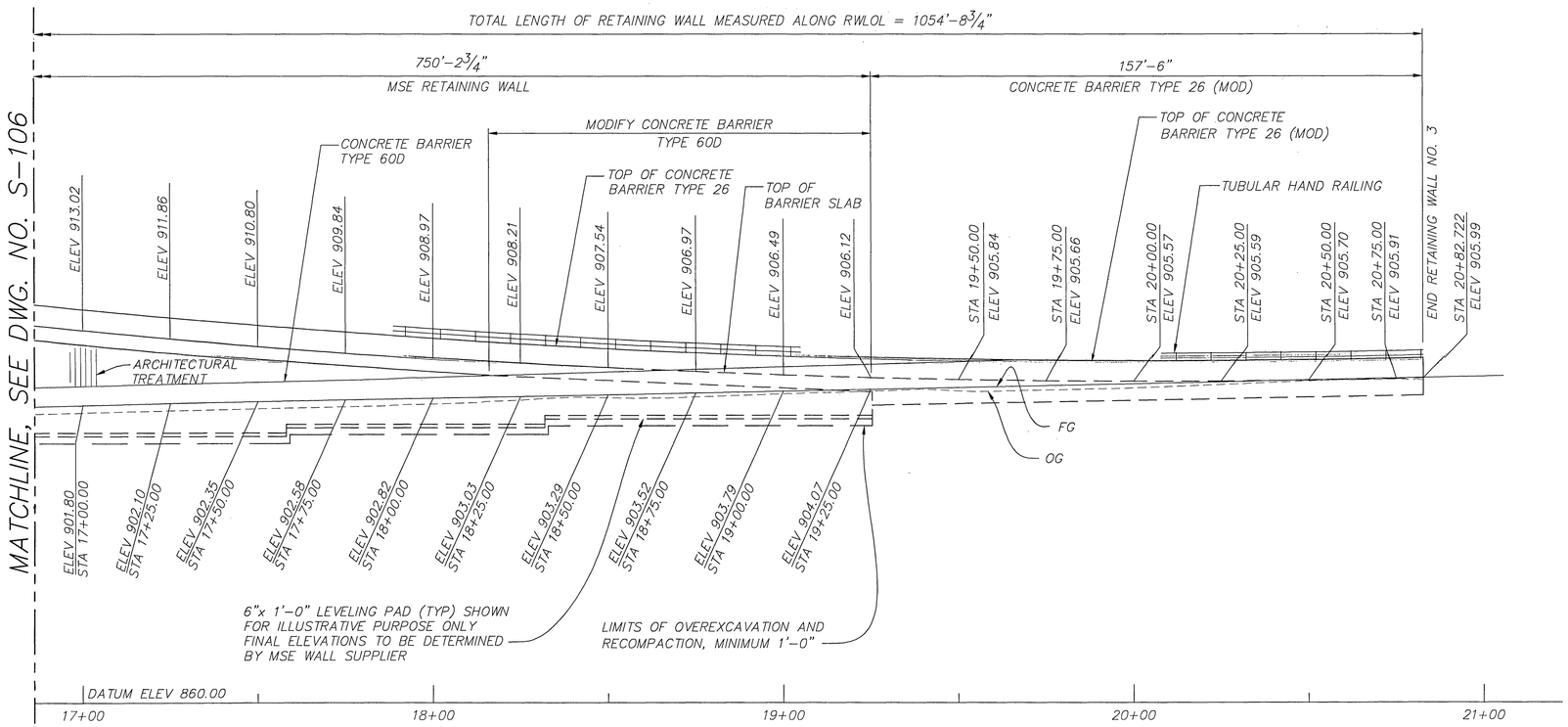

DEVELOPED ELEVATION

HORIZ : 1" = 20'
VERT: 1" = 10'

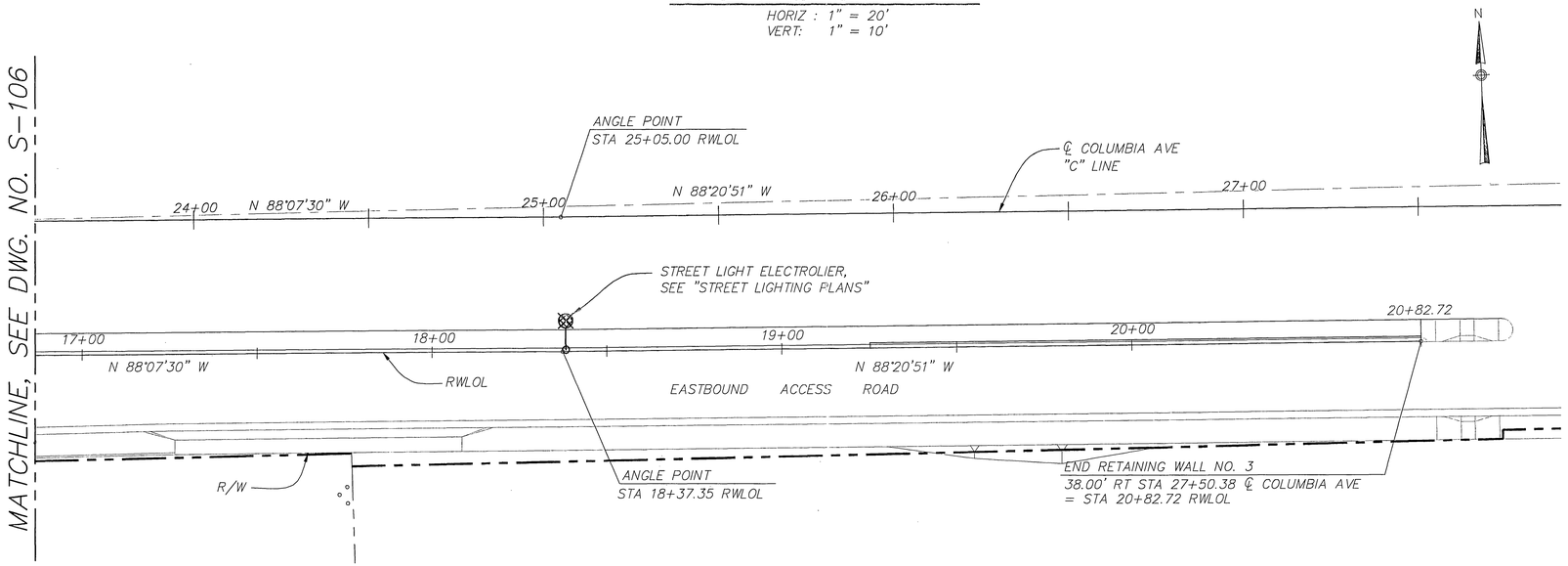

PLAN

1" = 20'

NOTE:

1. SEE NOTES ON SHEET S-105.

AS BUILT
DATE 9-14-10

GRAPHIC SCALE: 20' 10' 0 20' 40' HORIZ 1" = 20'

DMJM HARRIS | AECOM
800 NORTH HAVEN, SUITE 410
ONTARIO, CA 91764
T (909)291-8150 F (909)291-8166

REGISTERED PROFESSIONAL ENGINEER JOHN LEIMBERGER No. C65950 Exp. 6-30-10 CIVIL STATE OF CALIFORNIA

MARK	REVISIONS	APPR.	DATE
1	DELETED NOTE	JL	08/18/08

DESIGNED BY JL DRAWN BY LR CHECKED BY JW

1 ~~NOT FOR CONSTRUCTION~~

COLUMBIA AVENUE OVERPASS AT BNSF RAILROAD

RETAINING WALL NO. 3
WALL LAYOUT NO. 3

SCALE: AS SHOWN

ACCT. NO.
R-4036
S-107
SHEET 83 OF 103

DWG: P:\60004223 Columbia Grade Sep\CADD\Struct\Sheet\BRIDGE\ST-107.dwg
TIME: 8-18-08 - 2:46pm User: LandaseE XRef Files: P:\60004223 Coumbial Grade Sep\CADD\Civil\Ref\xtopo.dwg ..\..\..\civil\ref\xrow_ex.dwg P:\60004223 Coumbial Grade Sep\CADD\Civil\Ref\xsurvey.dwg P:\60004223 Coumbial Grade Sep\CADD\Civil\Ref\xutil_ex.dwg P:\6003

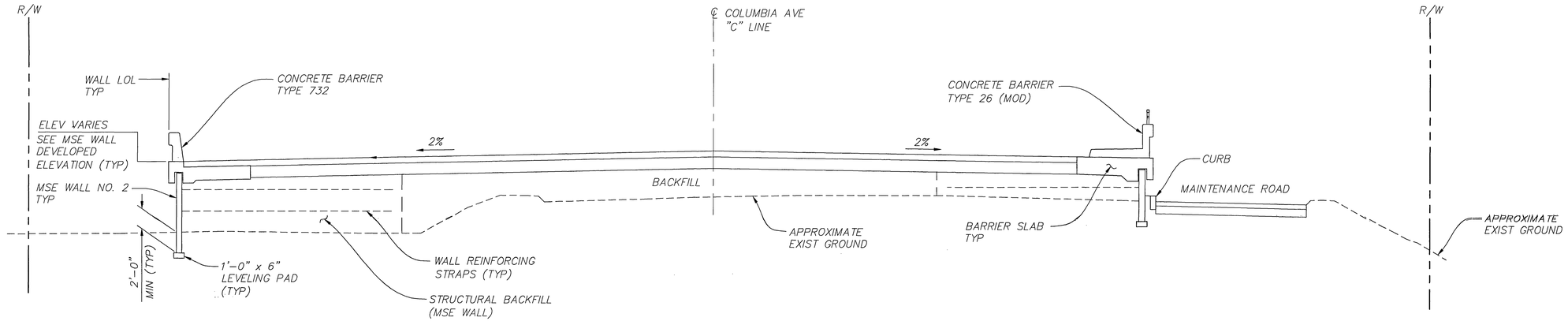

SECTION A
3/16" =1'-0" S-100

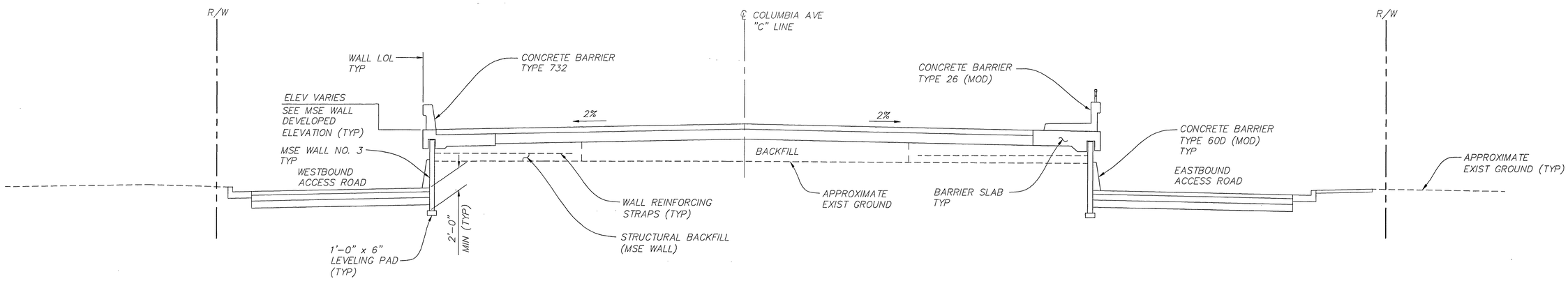

SECTION B
3/16" =1'-0" S-100

NOTE:

1. FOR MSE WALL ELEVATIONS SHOWN ARE AT THE TOP OF BARRIER SLAB.

1

NOT FOR CONSTRUCTION

AS BUILT
DATE 9-14-10

DMJM HARRIS | AECOM
800 NORTH HAVEN, SUITE 410
ONTARIO, CA 91764
T (909)291-8150 F (909)291-8166

REGISTERED PROFESSIONAL ENGINEER
JOHN LEIMBACHER
No. C65950
Exp. 6-30-10
CIVIL
STATE OF CALIFORNIA

MARK	REVISIONS	APPR.	DATE
1	DELETED NOTE	JL	08/18/08

DESIGNED BY JL DRAWN BY LR CHECKED BY JW

COLUMBIA AVENUE OVERPASS AT BNSF RAILROAD

MSE RETAINING WALL SECTIONS

SCALE: AS SHOWN

ACCT. NO.
R-4036
S-108
SHEET 84 OF 103

DWG: P:\60004223 Columbia Grade Sep\CADD\Struct\Sheet\BRIDGE\ST-108.dwg P:\60004223 Columbia Grade Sep\CADD\Civil\Ref\xrd-colu_project.dwg P:\60004223 Columbia Grade Sep\CADD\Civil\Ref\xtopo.dwg
TIME: 8-18-08 - 2:46pm User: LandaseE XRef Files: ..\..\Ref\xbdr-bridge.dwg P:\60004223 Columbia Grade Sep\CADD\Civil\Ref\xrow_ex.dwg P:\60004223 Columbia Grade Sep\CADD\Civil\Ref\xtopo.dwg

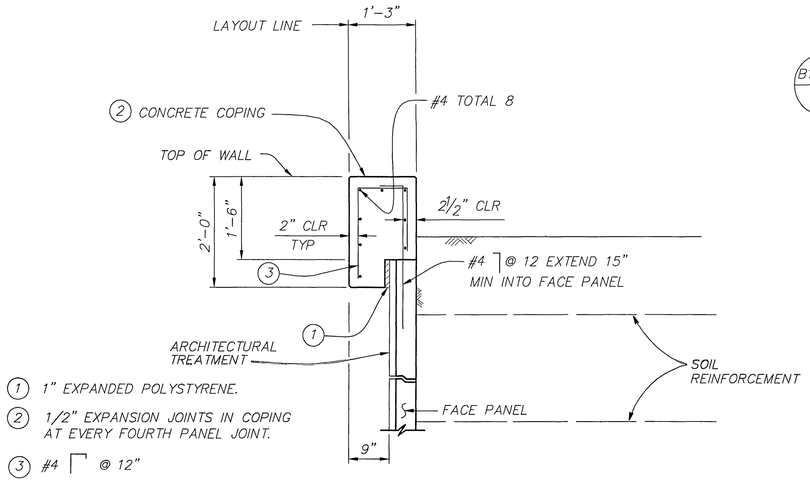

① 1" EXPANDED POLYSTYRENE.
② 1/2" EXPANSION JOINTS IN COPING AT EVERY FOURTH PANEL JOINT.
③ #4 @ 12"

SECTION AT TOP OF WALL WITH COPING AND GUTTER

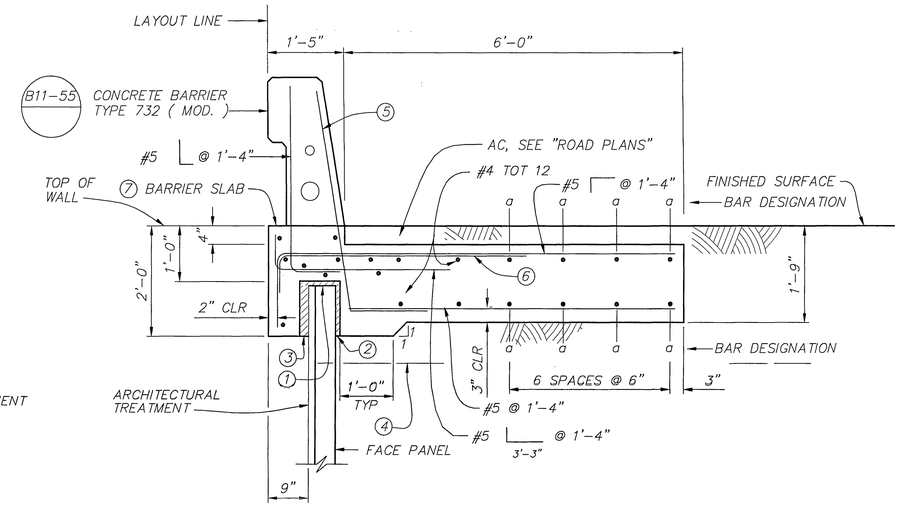

SECTION AT TOP OF WALL WITH CONCRETE BARRIER TYPE 732 (MOD)

① 1" EXPANDED POLYSTYRENE
② 1" EXPANDED POLYSTYRENE
③ 2" EXPANDED POLYSTYRENE
④ SOIL REINFORCEMENT
⑤ #5 @ 8"
⑥ #5 4'-7" @ 1'-4", BUNDLED WITH #5 @ 1'-4"
⑦ 1/2" EXPANSION JOINTS IN BARRIER SLAB AND BARRIER AT EVERY FOURTH PANEL JOINT

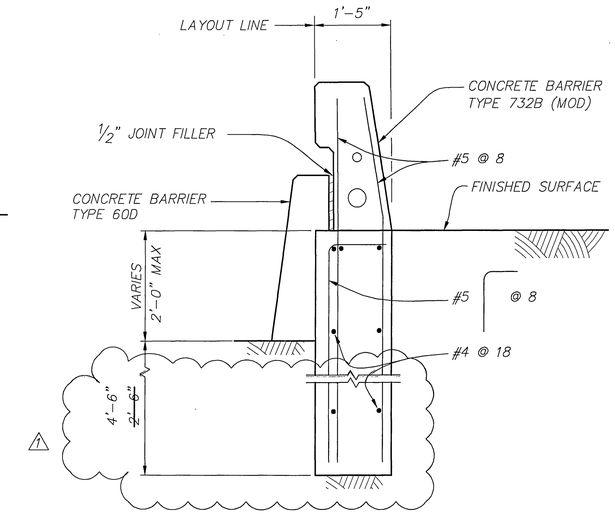

SECTION AT CONCRETE BARRIER TYPE 732B (MOD)

NOTES:

1. FOR INFORMATION NOT SHOWN, SEE STANDARD PLAN B11-55 AND A76A.
2. PROVIDE 1/2" EXPANSION JOINT AT 24'-0" CENTER TO CENTER IN CONCRETE BARRIER AND FOOTING.
3. THE CONCRETE BARRIER TYPE 60D SHALL NOT EXCEED HEIGHT OF THE CONCRETE BARRIER TYPE 732B(MOD).

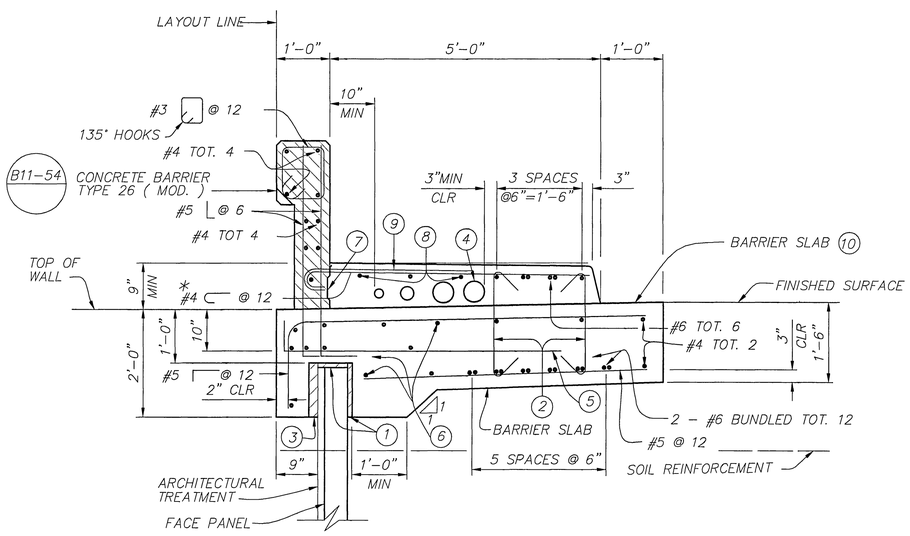

SECTION AT TOP OF WALL WITH CONCRETE BARRIER TYPE 26 (MOD)

NOTES FOR CONCRETE BARRIER TYPE 26 (MOD)

① 1" EXPANDED POLYSTYRENE
② #4 @ 12" 135° HOOKS
③ 2" EXPANDED POLYSTYRENE
④ UTILITY OPENING LOCATION, NUMBER AND SIZE TO MATCH BRIDGE SIDEWALK. SEE SHT. S-16. OPENINGS ARE TO BE SEALED AT ENDS IF NOT USED. SECURE FORMS FOR OPENINGS TO BARRIER SLAB.
⑤ #5 6" 4'-3" @ 12"
⑥ #4 TOT. 13
⑦ OPTIONAL CONSTRUCTION JOINT
⑧ #4 TOT. 4
⑨ #4 3'-7" @ 6" BUNDLE ALTERNATE BARS WITH #4 @ 12" BUNDLE WITH EACH #4 @ 6" AT ENDS OF WALL.
⑩ 1/2" EXPANSION JOINTS IN BARRIER SLAB AND BARRIER AT EVERY FOURTH PANEL JOINT

* EXCEPT 6 SPACES AT 6" AT ENDS OF WALL.

PARAPET CONCRETE = STRUCTURAL CONCRETE f'c = 4000 psi

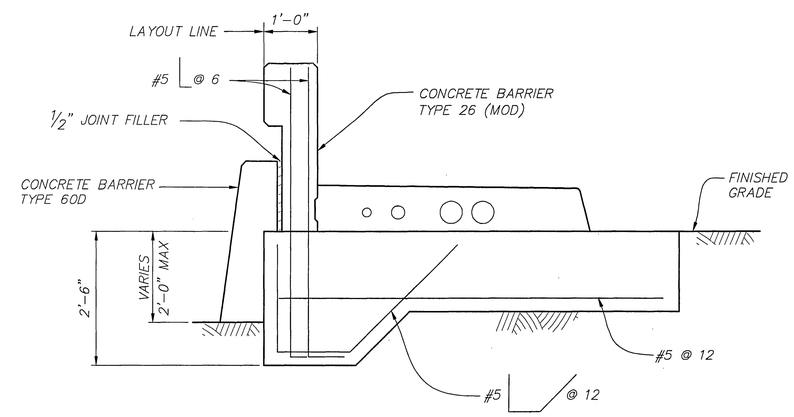

SECTION AT CONCRETE BARRIER TYPE 26 (MOD)

NOTES:

1. FOR INFORMATION NOT SHOWN, SEE DETAILS HEREIN AND A76A.
2. PROVIDE 1/2" EXPANSION JOINT AT 24'-0" CENTER TO CENTER IN CONCRETE BARRIER AND SLAB.
3. THE TYPE 60D CONCRETE BARRIER SHALL NOT EXCEED THE HEIGHT OF THE TYPE 26(MOD).

NOT FOR CONSTRUCTION

AS BUILT
DATE 9-14-10

DMJM HARRIS | AECOM
800 NORTH HAVEN, SUITE 410
ONTARIO, CA 91764
T (909)291-8150 F (909)291-8166

REGISTERED PROFESSIONAL ENGINEER JOHN LEIMBACHER No. C65950 Exp. 6-30-10 CIVIL STATE OF CALIFORNIA

MARK	REVISIONS	APPR.	DATE
1	REVISED DEPTH OF FOOTING & DELETED NOTE	JL	08/18/08

DESIGNED BY JL DRAWN BY EL CHECKED BY JW

COLUMBIA AVENUE OVERPASS AT BNSF RAILROAD

MSE RETAINING WALL DETAILS NO. 1

SCALE: AS SHOWN

ACCT. NO. R-4036

S-109

SHEET 85 OF 103

DWG: P:\60004223 Columbia Grade Sep\CADD\Struct\Sheet\BRIDGE\ST-109.dwg X-BARRIER.dwg
TIME: 8-26-08 - 9:32am User: LandasE XRef Files: ..\..\ref\xbdr-bridge.dwg

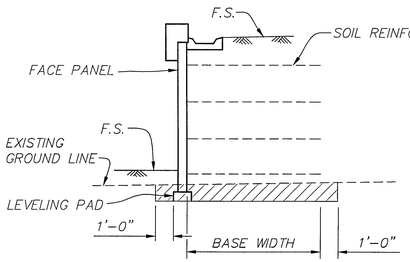

LIMITS OF EXCAVATION

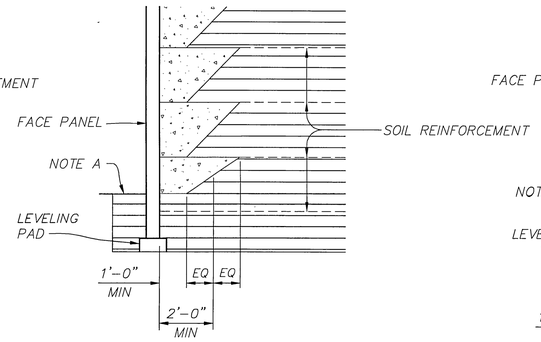

LIMITS OF PERMEABLE MATERIAL

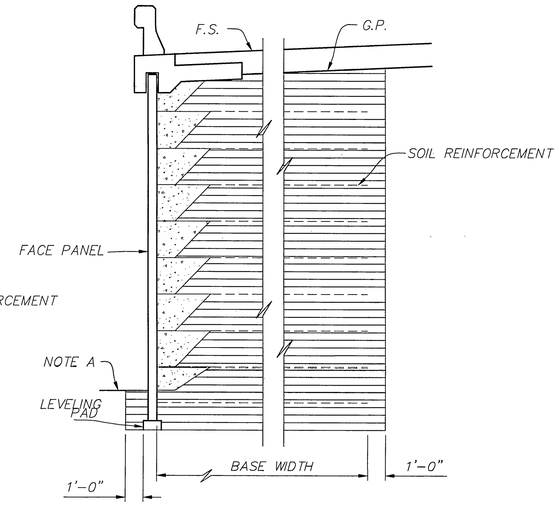

NOTE A:
LIMITS TO F.S. EXCEPT TO G.P. WHEN IN A ROADWAY SECTION.

LIMITS OF STRUCTURAL BACKFILL

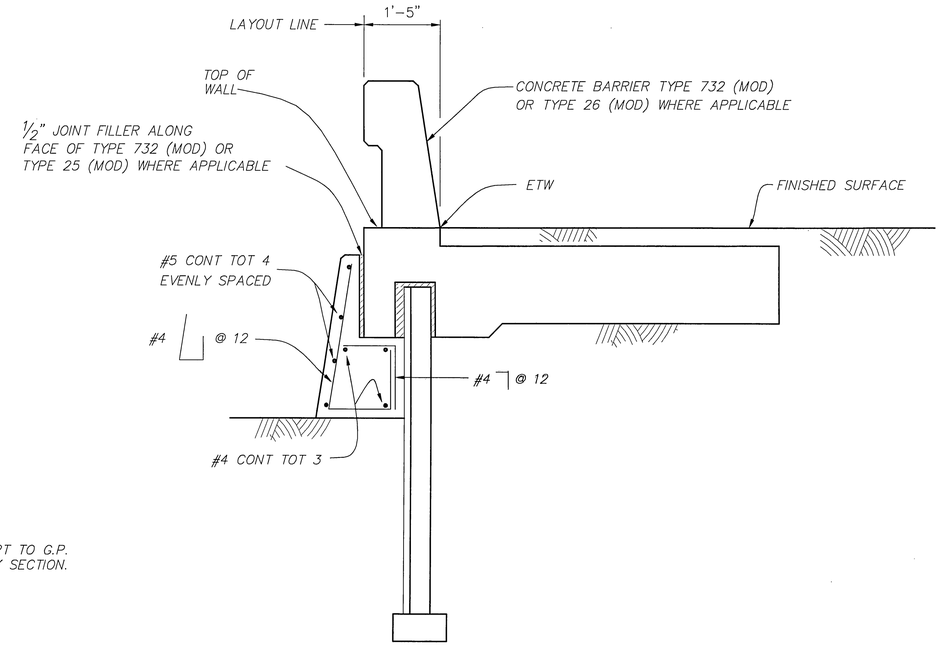

SECTION B-B

ABBREVIATIONS

O.G.	ORIGINAL GROUND
F.S.	PLANNED FINISHED SURFACE
G.P.	PLANNED GRADING PLANE

LEGEND

- LIMITS OF STRUCTURE EXCAVATION
- LIMITS OF STRUCTURE BACKFILL
- LIMITS OF PERMEABLE MATERIAL

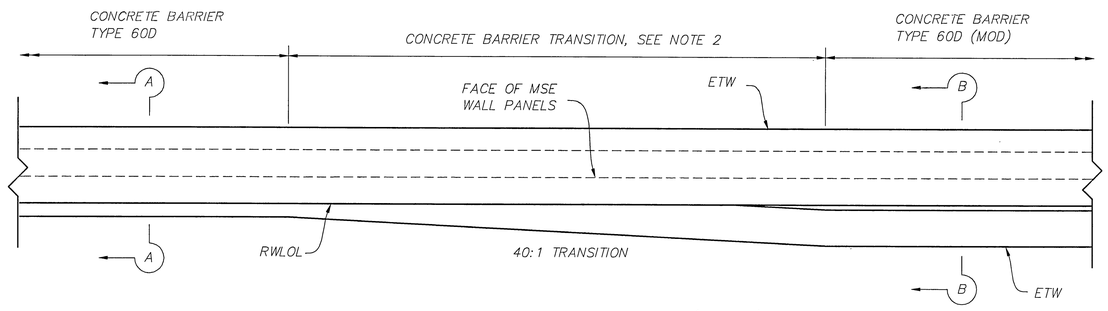

CONCRETE BARRIER TYPE 60D (MOD) TRANSITION DETAIL

NOTES:

1. TRANSITION FROM TYPE 60D (MOD) TO TYPE 60D CONCRETE BARRIER TO BEIGIN WHEN VERTICAL CLEARANCE IS 3'-1" MINIMUM.
2. ADDITIONAL REINFORCEMENT IN TYPE 60D (MOD) TO CONTINUE THROUGH ENTIRE LENGTH OF TRANSITION.

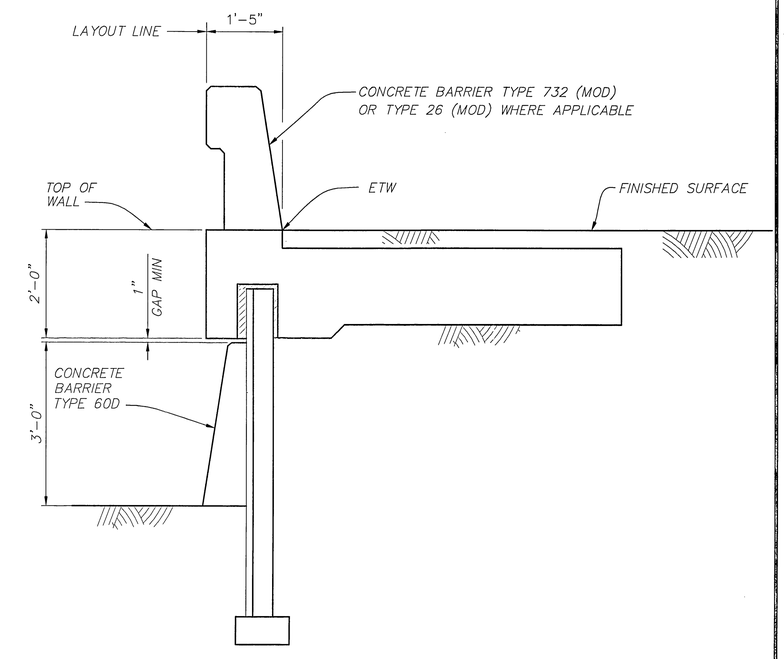

SECTION A-A

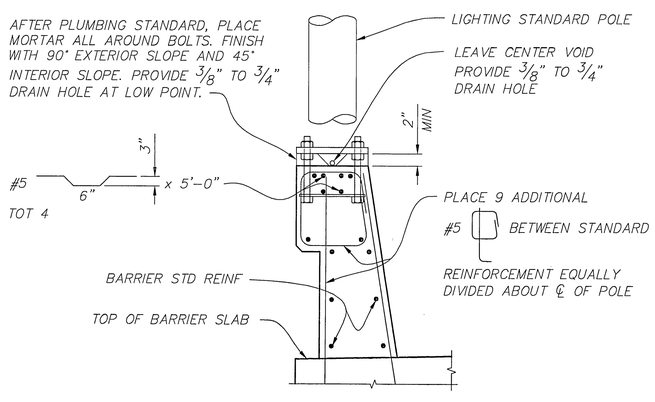

LIGHTING STANDARD ON CONCRETE BARRIER TYPE 732 (MOD)

1" = 1'-0"

B11-55 ES-6A ES-6B

NOTES:

1. FOR DETAIL NOT SHOWN, SEE STANDARD PLAN A76A.
2. PROVIDE 1/2" EXPANSION JOINT AT EVERY FOURTH PANEL JOINT FOR WHOLE LENGTH OF TYPE 60D CONCRETE BARRIER, INCLUDING STANDARD AND MODIFIED SECTIONS.

AS BUILT
DATE 9-14-10

NOT FOR CONSTRUCTION

DMJM HARRIS | AECOM
800 NORTH HAVEN, SUITE 410
ONTARIO, CA 91764
T (909)291-8150 F (909)291-8166

REGISTERED PROFESSIONAL ENGINEER JOHN LEIMBACHER No. C65950 Exp. 6-30-10 CIVIL STATE OF CALIFORNIA

MARK	REVISIONS	APPR.	DATE
1	DELETED NOTE	JL	08/18/08

DESIGNED BY JL DRAWN BY HC CHECKED BY JW

COLUMBIA AVENUE OVERPASS AT BNSF RAILROAD

MSE RETAINING WALL DETAILS NO. 2

SCALE: AS SHOWN

ACCT. NO.
R-4036
S-110
SHEET 86 OF 103

DWG: P:\60004223 Columbia Grade Sep\CADD\Struct\Sheet\BRIDGE\ST-110.dwg
TIME: 8-18-08 - 2:47pm User: LandosE XRef Files: ..\..\ref\xbdr-bridge.dwg X-BARRIER.dwg X-TYPSECT.dwg

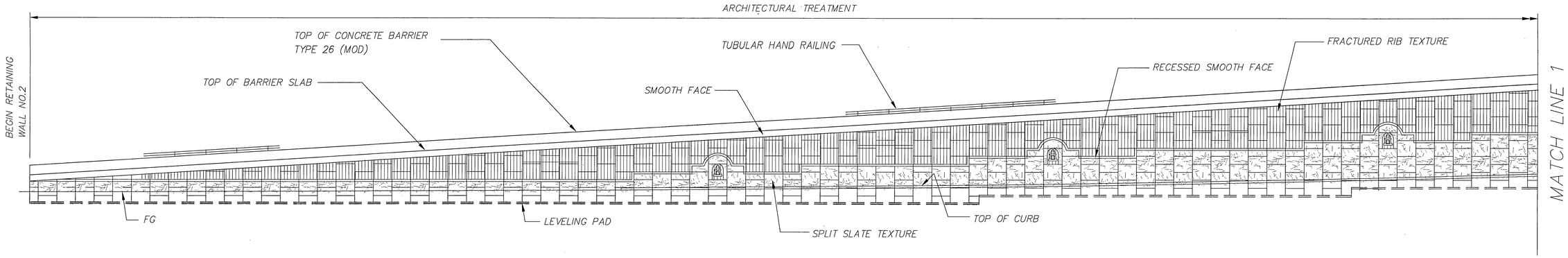

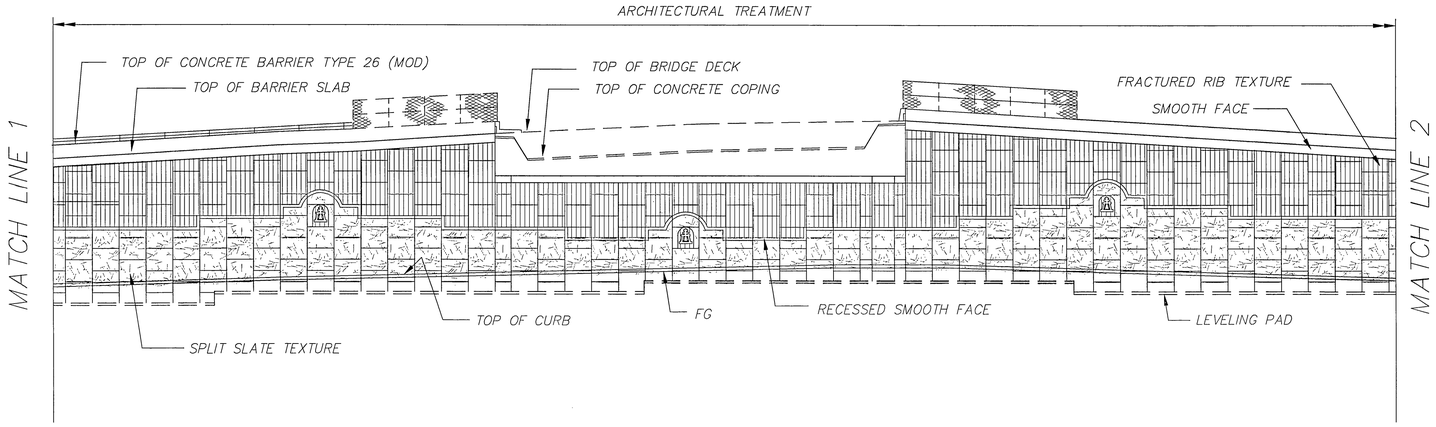

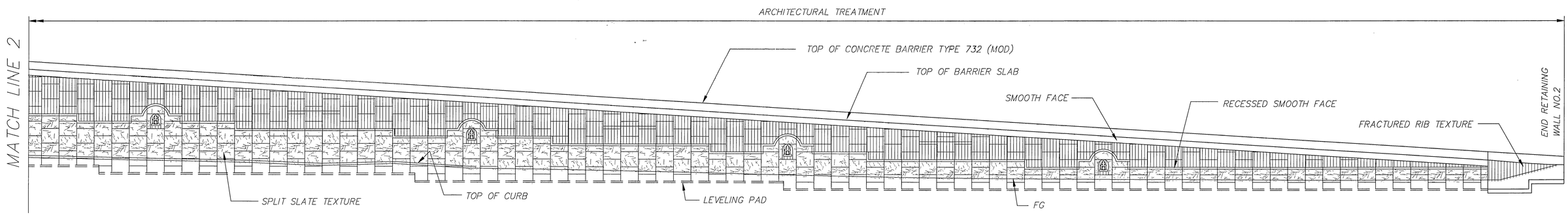

ARCHITECTURAL TREATMENT

1/16" = 1'-0"

NOTES:
1. FOR MOTIF DETAILS, SEE "ARCHITECTURAL DETAILS NO. 3" SHEET.
2. FOR FRACTURED RIB AND SPLIT SLATE TEXTURES, SEE "ARCHITECTURAL DETAILS NO. 3" SHEET.

AS BUILT
DATE 9-14-10

~~NOT FOR CONSTRUCTION~~

DMJM HARRIS | AECOM
800 NORTH HAVEN, SUITE 410
ONTARIO, CA 91764
T (909)291-8150 F (909)291-8166

REGISTERED PROFESSIONAL ENGINEER
JOHN LEIMBACHER
No. C65950
Exp. 6-30-10
CIVIL
STATE OF CALIFORNIA

MARK	REVISIONS	APPR.	DATE
1	DELETED NOTE	JL	08/18/08

DESIGNED BY JL DRAWN BY DH CHECKED BY JW

COLUMBIA AVENUE OVERPASS AT BNSF RAILROAD

RETAINING WALL NO. 2
ARCHITECTURAL DETAILS NO. 1

SCALE: AS SHOWN

ACCT. NO.
R-4036
S-111
SHEET 87 OF 103

DWG: P:\60004223 Columbia Grade Sep\CADD\Struct\Sheet\BRIDGE\ST-111.dwg
TIME: 8-18-08 - 2:47pm User: LandaseE XRef Files: ..\..\Xref\xbdr-bridge.dwg XAR-TREATMENT.dwg

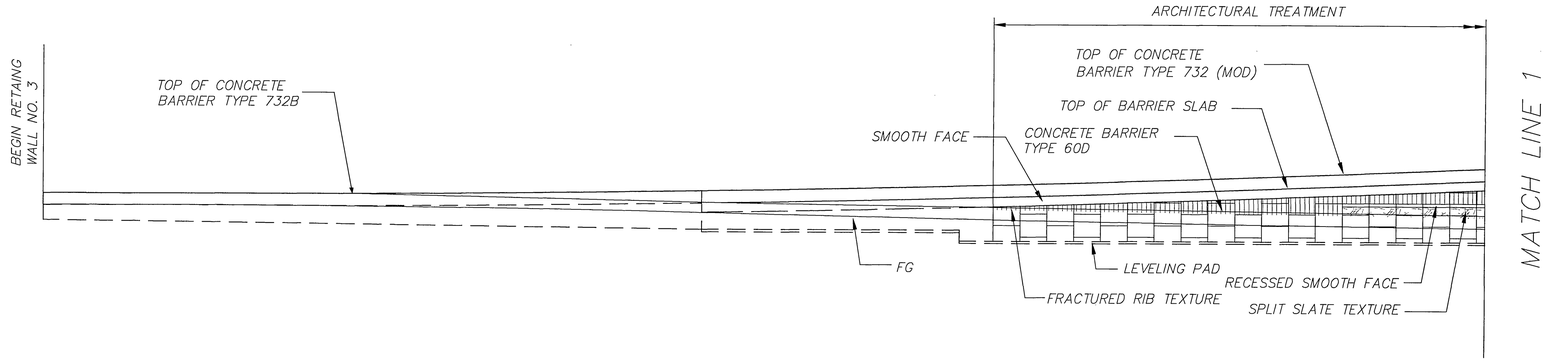

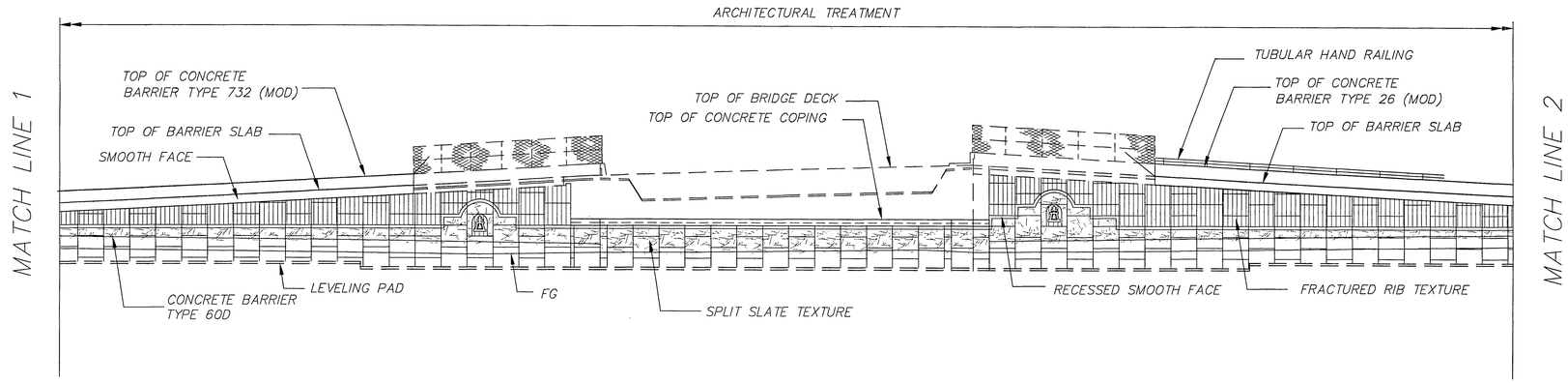

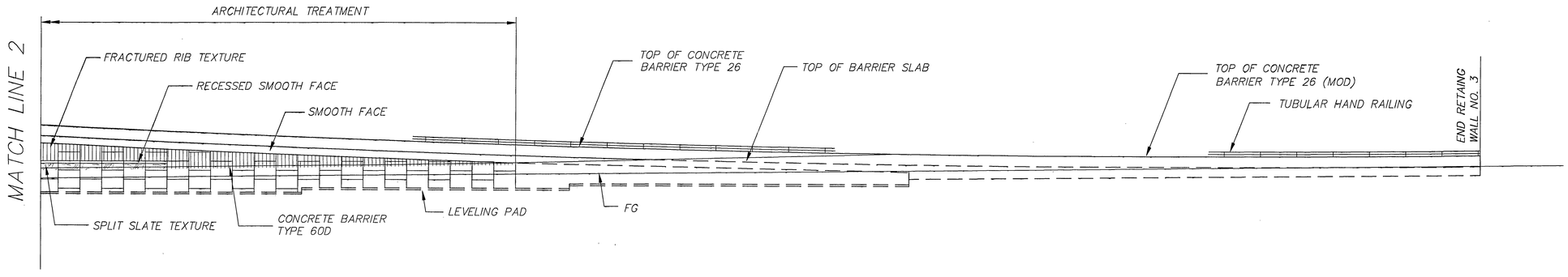

NOTES:
1. FOR MOTIF DETAILS, SEE "ARCHITECTURAL DETAILS NO. 3" SHEET.
2. FOR FRACTURED RIB AND SPLIT SLATE TEXTURES, SEE "ARCHITECTURAL DETAILS NO. 3" SHEET.

ARCHITECTURAL TREATMENT

1/16" = 1'-0"

AS BUILT
DATE 9-14-10

NOT FOR CONSTRUCTION

DMJM HARRIS | AECOM
800 NORTH HAVEN, SUITE 410
ONTARIO, CA 91764
T (909)291-8150 F (909)291-8166

REGISTERED PROFESSIONAL ENGINEER JOHN LEIMBACHER No. C65950 Exp. 6-30-10 CIVIL STATE OF CALIFORNIA

MARK	REVISIONS	APPR.	DATE
1	DELETED NOTE	JL	08/18/08

DESIGNED BY JL DRAWN BY DH CHECKED BY JW

COLUMBIA AVENUE OVERPASS AT BNSF RAILROAD

RETAINING WALL NO. 3
ARCHITECTURAL DETAILS NO. 2

SCALE: AS SHOWN

ACCT. NO.
R-4036
S-112
SHEET 88 OF 103

DWG: P:\60004223 Columbia Grade Sep\CADD\Struct\Sheet\BRIDGE\ST-112.dwg
TIME: 8-18-08 - 2:47pm User: LandosE XRef Files: ..\..\ref\xbdr-bridge.dwg XAR-TREATMENT.dwg

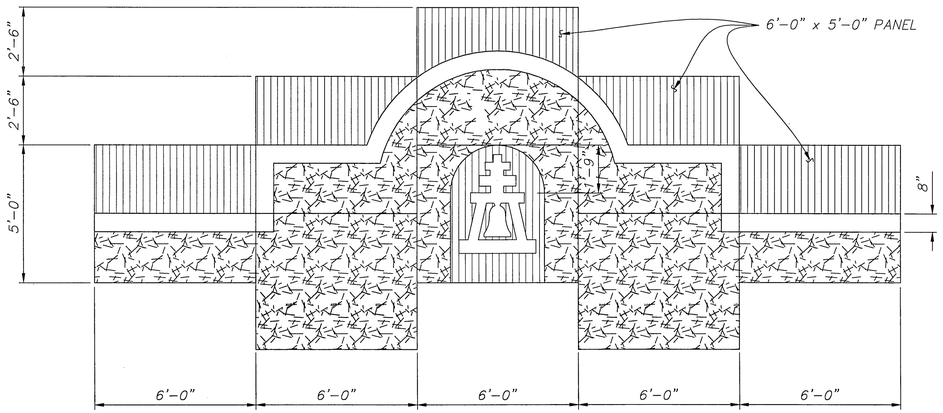

ENLARGED MOTIF PANELS

3/8" = 1'-0"

NOTE: ARCHITECTURAL TREATMENT MAY BE MODIFIED TO ACCOMODATE 5'-0" WIDE PANELS.

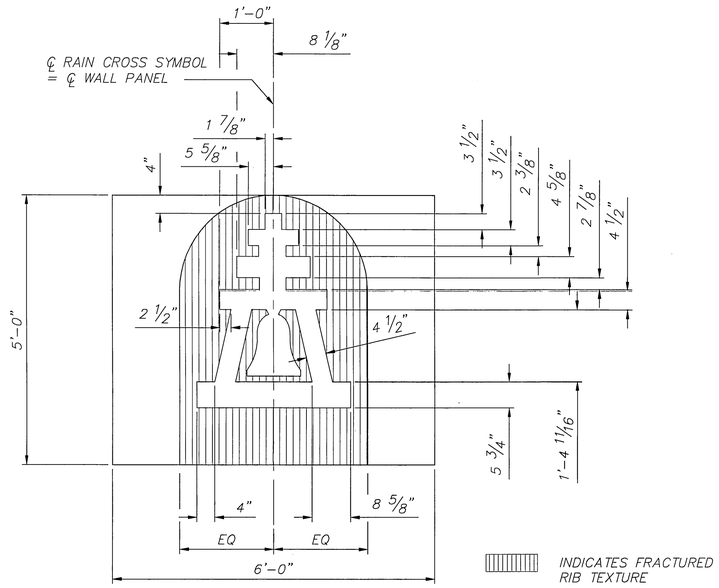

RAIN CROSS DETAIL

NO SCALE

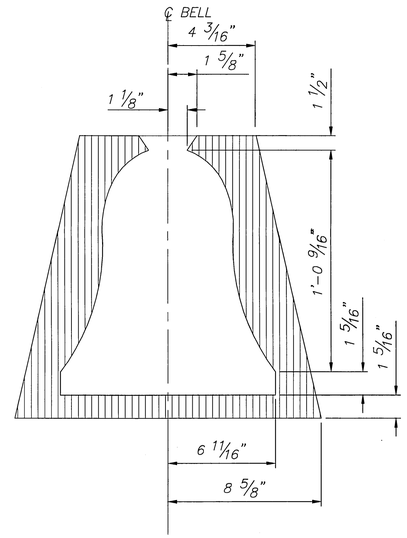

BELL DETAIL

NO SCALE

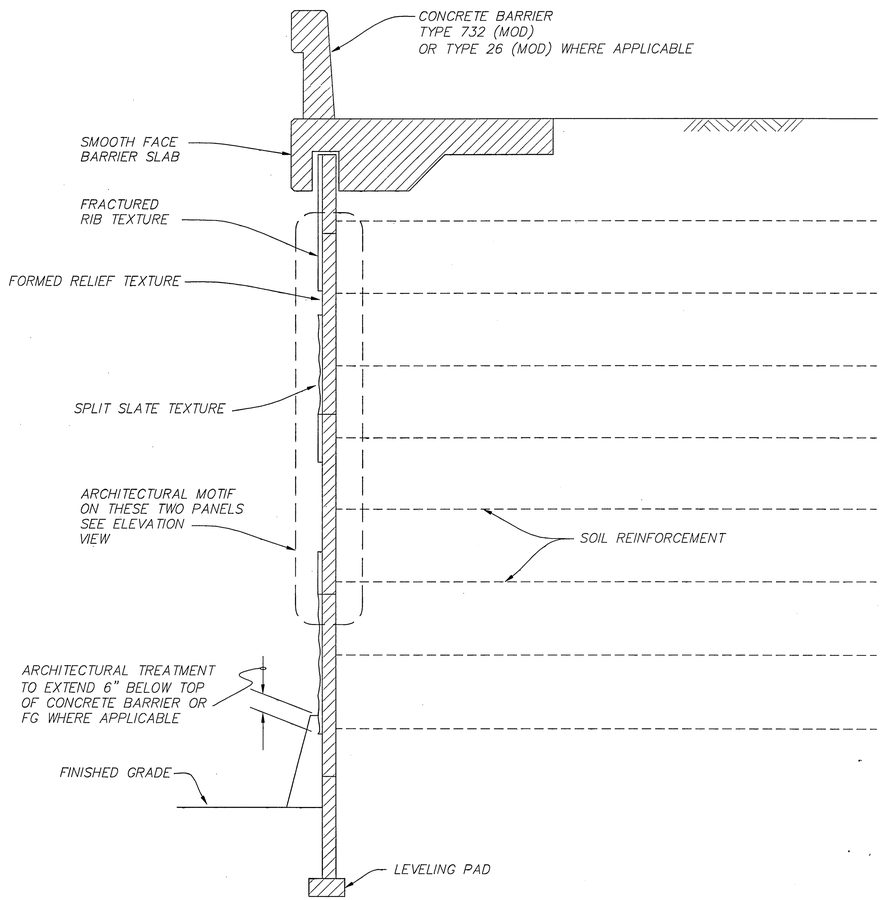

TYPICAL SECTION

1/2" = 1'-0"

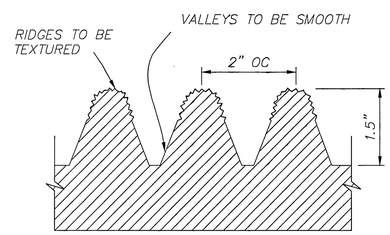

FRACTURED RIB TEXTURE

NO SCALE

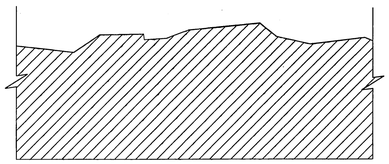

SPLIT SLATE TEXTURE

NO SCALE

AS BUILT
DATE 9-14-10

NOT FOR CONSTRUCTION

DMJM HARRIS | AECOM
800 NORTH HAVEN, SUITE 410
ONTARIO, CA 91764
T (909)291-8150 F (909)291-8166

REGISTERED PROFESSIONAL ENGINEER
JOHN LEIMBACHER
No. C65950
Exp. 6-30-10
CIVIL
STATE OF CALIFORNIA

MARK	REVISIONS	APPR.	DATE
1	DELETED NOTE	JL	08/18/08

DESIGNED BY JL DRAWN BY DH CHECKED BY JW

COLUMBIA AVENUE OVERPASS AT BNSF RAILROAD

MSE RETAINING WALL
ARCHITECTURAL DETAILS NO. 3

SCALE: AS SHOWN

ACCT. NO.
R-4036
S-113
SHEET 89 OF 103

DWG: P:\60004223 Columbia Grade Sep\CADD\Struct\Sheet\BRIDGE\ST-113.dwg
TIME: 8-18-08 - 2:47pm User: LandaseE XRef Files: ..\..\ref\xbdr-bridge.dwg XAR-TREATMENT.dwg