LOBBY ANNEX ARCHITECT, ELECTRICAL, MECHANICAL, PLUMBING AND STRUCTURAL PLANS AND SPECIFICATIONS

LOBBY ANNEX ARCHITECT PLANS

Keynotes	
Key	Description
BS01	CMU WALL, SEE FLOOR PLANS FOR WALL TYPE
BS03	ALUMINUM STOREFRONT SYSTEM, SEE SHEETS A461 & A462
BS04	TILE ROOF, TO MATCH EXISTING
BS06	EXTERIOR PLASTER, MATCH EXISTING.
BS07	COLUMN COVER
BS08	ALUMINUM STOREFRONT SYSTEM
BS09	METAL RAILING, PAINTED BLACK.
BS11	1 1/2" DIA. HAND RAIL
BS13	METAL GUTTER, PAINTED.
BS14	CONC. OVER METAL DECK - SEE STRUCTURAL
BS15	CONCRETE SLAB & FOOTING - SEE STRUCTURAL
BS16	LINE OF ELEVATOR PIT
BS17	SKYLIGHT
BS18	4" RIGID INSULATION ROOFING MEMBRANE
BS19	ELEVATOR SHAFT
BS20	SEE MECHANICAL ROOF PLAN FOR UNIT LOCATION
BS21	ZURN AREA DRAIN. SEE SHEET A-P000 FOR MORE INFORMATION.
BS22	4" METAL FRAMING
BS23	R-19 BATT INSULATION
BS25	2" MIN. W.P. TOP COAT CONCRETE, SLOPE TO F.D. @ 2% MAX.
BS26	5/8" GYPSUM BOARD
BS28	EXTERIOR CONCRETE SLAB
BS29	SUSPENDED GYP. BD. CEILING
BS30	GYP. BD. BOX BEAM, BEYOND
BS31	STEEL FRAMING - SEE STRUCTURAL
BS33	STEEL "Z" CHANNEL @ 24" O.C.
BS34	R-13 BATT INSULATION
BS35	LUMINAIRE - SEE ELECTRICAL
BS36	ROOF PITCH TO MATCH EXISTING
BS37	DRAIN PIPE DOWN TO WALL SCUPPER
BS38	R-30 BATT INSULATION
BS39	VERTICAL LIFT
BS40	STAIRS BEYOND
BS48	MECHANICAL SHAFT
BS49	THIS AREA WILL CONNECT TO EXIT STAIRWAY IN PHASE II
BS50	EXIT STAIRWAY, REFER TO PHASE II
BS51	STEP LIGHT
BS52	1 1/2" MIN. FOAM ROOFING MEMBRANE
BS53	GYPSUM SHEATHING
BS54	1-PLY ROOF
BS55	WATER PROOFING DOWN TO FOOTING, TYP.
DE01	REMOVE (E) LIGHTING FIXTURE
DE02	REMOVE (E) GUTTER AT TOP OF NEW ROOF
DE03	REMOVE (E) DOWNSPOUT PIPE AT TOP OF NEW ROOF
DE04	PORTION OF (E) MOLDING TO BE REMOVED
DE05	REMOVE (E) WINDOW AND FRAME. REMOVE FRAMING BELOW WINDOW TO ACCOMODATE NEW DOOR AT SAME LOCATION.
DE06	REMOVE (E) GUARD RAIL
DE07	REMOVE (E) DECORATIVE WROUGHT IRON
DE08	REMOVE (E) WROUGHT IRON GATE
DE09	REMOVE (E) DOOR AND FRAME
DE10	THIS PORTION OF STAIR IS TO BE REMOVED AFTER NEW BUILDING IS COMPLETED
DE11	REMOVE (E) CONCRETE SLAB
DE12	EDGE OF (E) STAIR ABOVE TO REMAIN
DE13	EDGE OF (E) STAIR ABOVE TO BE REMOVED
DE14	(E) FILLED IN OPENINGS TO REMAIN
DE15	REMOVE (E) CMU IN (E) FILLED IN OPENINGS
DE16	(E) DOOR TO REMAIN IN PLACE
DE17	PORTION OF (E) MOLDING TO REMAIN IN PLACE
DE18	ROOFLINE OF NEW BUILDING. SEE A-A201 FOR EXTENT OF NEW WORK IN ELEVATION VIEW.
EL01	STUD WALL INFILL
EL03	EXISTING FOX THEATRE
EL04	EDGE OF FUTURE PHASE II SCOPE
EL05	ALUMINUM STOREFRONT SYSTEM
EL06	IRON RAILING
EL07	CMU
EL08	NEW DOOR AND LENGTHENED WINDOW OPENING
EL10	COLUMN COVERS
EL11	EXTERIOR PLASTER, MATCH EXISITNG.
EL12	LINE OF LOWER LEVEL
EL13	LINE OF ELEVATOR PIT
EL14	TILE ROOF, TO MATCH EXISTING
EL16	ALUMINUM STOREFRONT ENTRY. SEE DOOR SCHEDULE ON SHEET A-A601.
EL17	CONCRETE COLUMN
EL18	CORNICE
EL19	ROSETTE WINDOW, INSCRIBED QUATREFOIL WITH SINGLE PIECE TEMPERED GLASS TO MATCH EXISTING
EL20	HOIST BEAM PER MANUFACTURER
EL21	RAIL
EL25	SEISMIC JOINT COLUMN COVER
EL26	STRUCTURAL COLUMN BEYOND
EL27	STRUCTURAL BEAM BEYOND
EP01	CMU WALL, SEE STRUCTURAL
EP02	CONCRETE COLUMN, SEE STRUCTURAL
EP03	(N) GUARD/HAND RAIL
EP04	(N) HAND RAIL 1
EP05	CONCRETE SLAB, SEE STRUCTURAL
EP06	METAL DECK, SEE STRUCTURAL
EP08	(E) GUARD/HAND RAIL
EP09	(E) METAL STAIR
EP10	(E) LANDING
EP11	(N) GUARD RAIL
EP12	(N) LIFT
EP13	(N) PLATFORM
EP14	1" HAT CHANNEL WITH 5/8" GYP. BD. FURRING
EP15	1 1/8" GYP BD. FURRING
EP16	JACK
EP17	PIT LADDER. SEE 9/A-A531 FOR MORE INFORMATION.
EP18	RAIL
EP19	1 5/8" GYP. FURRING
EP20	6" METAL STUD WALL WITH 1" SHAFTLINER
EP21	PROVIDE RAIL BRACKETS AS REQUIIRED
FP04	LINE OF LEVEL ABOVE
FP05	EXISTING STAIRS
FP06	(E) HESS FACADE "NOT A APART"
FP08	LINE OF BALCONY WALKWAY ABOVE
FP09	(E) HSS VERIFY LOCATION
FP11	CONCRETE COLUMN
FP12	SHAFT
FP16	ELEVATOR EQUIPMENT BY MANUFACTURER
FP17	EDGE OF EXISTING SIDEWALK
FP18	TACTILE EXIT SIGN @ 60" A.F.F. SEE 3/A-G004 FOR TYPICAL PLACEMENT OF SIGN AT EGRESS DOOR/OPENING.
FP19	ILLUMINATED EXIT SIGN AT ALL EXITS. SEE 3/A-G004 FOR TYPICAL PLACEMENT OF SIGN AT EGRESS DOOR/OPENING.

Keynotes	
Key	Description
FP20	WARNING STRIP AT TOP AND BOTTOM TREAD, TYP. EACH STAIR.
FP21	SEISMIC JOINT.
FP22	WARNING STRIP AT EACH TREAD
RP02	CRICKET, SLOPE 1/8" PER FT. MIN.
RP03	ROOF DRAIN
RP04	SLOPE DECK 1/4" PER FT.
RP05	SINGLE PLY ROOFING
RP07	HVAC UNIT. SEE MECHANICAL SHEET A-M102 FOR LOCATION.
RP08	LOBBY BALCONY, SEE 7/A111
RP09	TILE ROOF, TO MATCH EXISTING
RP10	EDGE OF CORNICE ABOVE
RP11	OUTLINE OF ROOF-MOUNTED MECHANICAL DUCT. SEE MECHANICAL SHEET A-M102 FOR LOCATION.

Bayley Construction
3730 S. Susan St.
Suite 200
Santa Ana, CA. 92704
CA. License 734880
Tel 714-540-8863
Fax 714-556-8863

Bayley Construction
8005 S.E. 28th St.
P.O. Box 9004
Mercer Island, WA. 98040
WA. License
BAYLEC034JC
Tel 206-621-8884
Fax 206-343-7728

BAYLEY CONSTRUCTION

DLR Group WWCOT
Architecture Engineering Planning Interiors

4280 Latham Street, Suite H
Riverside, California 92501
T 951.682.0470
F 951.682.1801

wwcot.com
dlrgroup.com

Santa Monica
Sacramento
Riverside
Palm Springs
Modesto
Shanghai, China

Copyright © 2010, DLR Group Inc. of California
DBA DLR Group WWCOT. All Rights Reserved

LICENSED ARCHITECT
JAMES A. MARIE SOUBIGNE
C 24803
9/19/2011
STATE OF CALIFORNIA

Public Agency Submittal:
Issued for Bidding:
Issued for Construction:

Revisions:

1 9/19/2011 Bulletin 1

FOR CONSTRUCTION

Phase I
FOX
ENTERTAINMENT
PLAZA
3605 Market Street
Riverside, CA 92501

City of Riverside

CITY OF RIVERSIDE

3900 Main Street , Riverside, CA 92522

Phase: CD
Revised 02.10.11
DLR Group Project No.75-10603-00

Master Keynotes

Issued Date: 02.10.11
Drawn By: Author
Checked By: Checker

A-A001
Sheet №

File Path & Name: C:\Users\sbohigian\Desktop\75-10603-00 Riv Parking Garage 7_Phase 1 local bohigian.rvt
© WWCOT 2009 -- Plotted 9/16/2011 4:41:20 PM

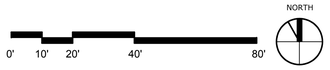

SITE PLAN

Scale 1" = 20'-0"

1

Bayley Construction
3730 S. Susan St.
Suite 200
Santa Ana, CA. 92704
CA. License 734880
Tel 714-540-8863
Fax 714-556-8863

Bayley Construction
8005 S.E. 28th St.
P.O. Box 9004
Mercer Island, WA. 98040
WA. License
BAYLEC034JC
Tel 206-621-8884
Fax 206-343-7728

DLR Group
WWCOT
Architecture Engineering Planning Interiors

490 South Farrell Drive, Suite C-203
Palm Springs, California 92262

T 760.320.1709
F 760.320.9336
wwcot.com
dlrgroup.com

Santa Monica
Sacramento
Riverside
Palm Springs
Modesto
Shanghai, China

Copyright © 2010, DLR Group Inc. of California
DBA DLR Group WWCOT. All Rights Reserved

LICENSED ARCHITECT
JAMES A. MARIE SOUBIRAN
C 24803
12/31/2011
STATE OF CALIFORNIA

Public Agency Submittal:
Issued for Bidding:
Issued for Construction:

Revisions:

FOR CONSTRUCTION

Phase I
FOX
ENTERTAINMENT
PLAZA
3605 Market Street
Riverside, CA 92501

City of Riverside

CITY OF RIVERSIDE

3900 Main Street , Riverside, CA 92522

Phase: CD
Revised 02.10.11
DLR Group Project No.75-10603-00

Site Plan

Issued Date: 02.10.11
Drawn By: JP
Checked By: MS

A-A101
Sheet №

File Path & Name: C:\Users\sbohigian\Desktop\75-10603-00 Riv Parking Garage 7_Phase 1 local bohigian.rvt
© WWCOT 2009 -- Plotted 9/16/2011 4:41:24 PM

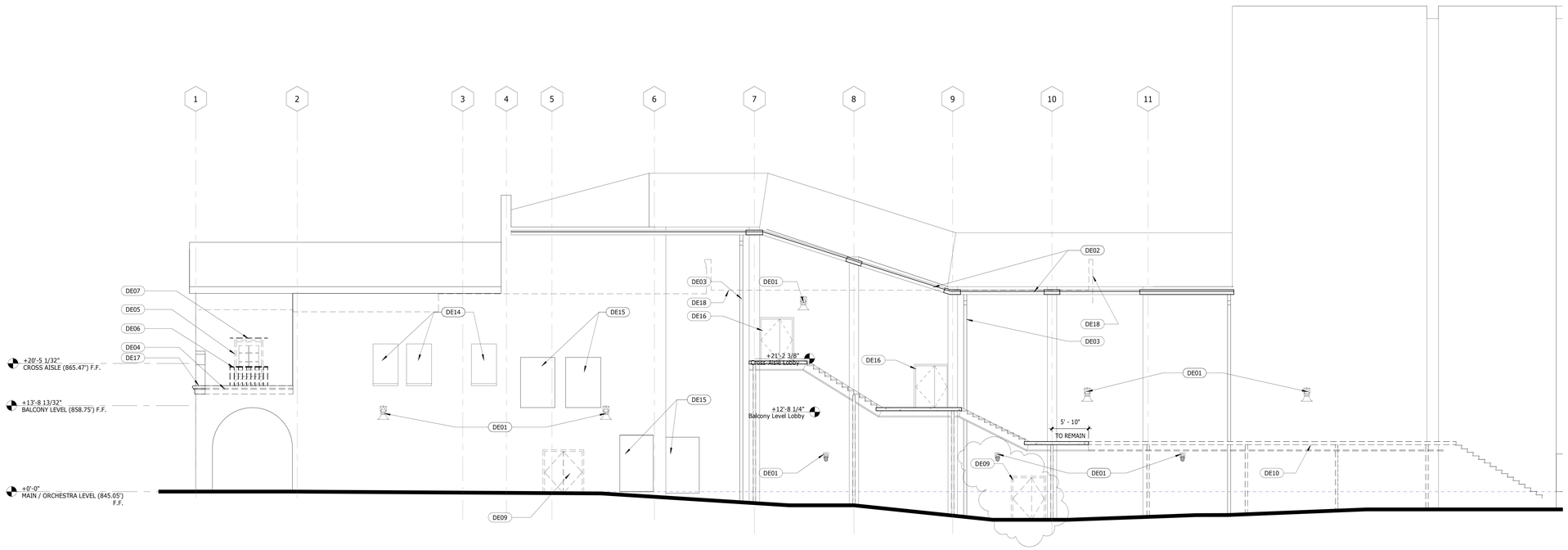

EXISTING AND DEMOLITION NORTH ELEVATION

Scale 1/8" = 1'-0" 2

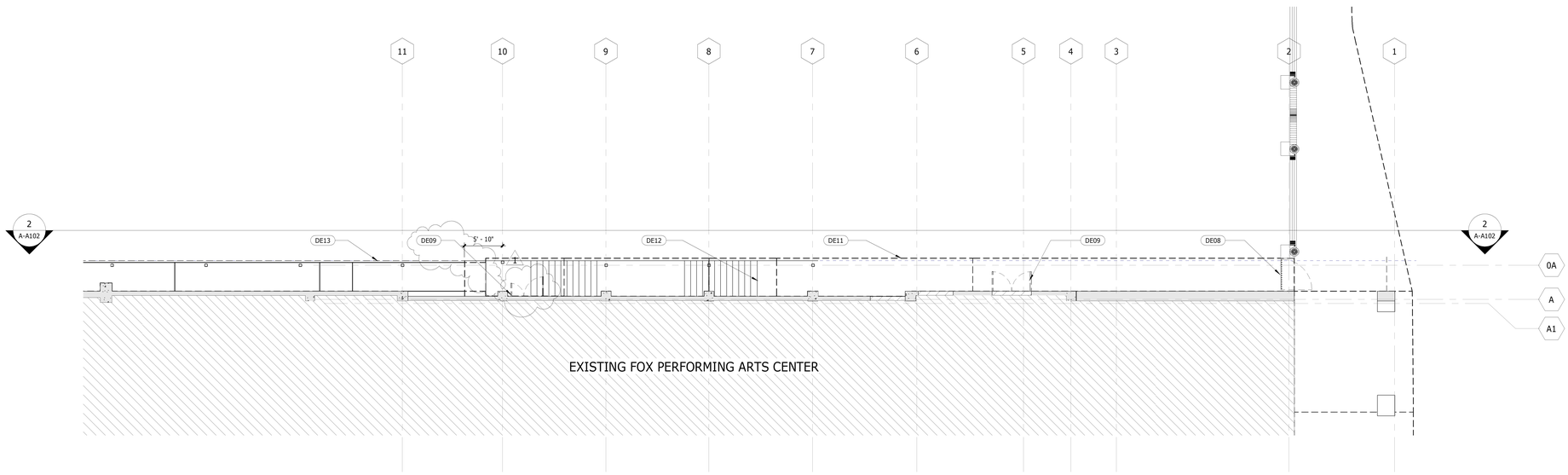

FIRST FLOOR DEMOLITION PLAN

Scale 1/8" = 1'-0" 1

File Path & Name: C:\Users\cbohigian\Desktop\75-10603-00 Riv Parking Garage 7_Phase 1 local bohigian.rvt
© WWCOT 2009 -- Plotted 9/16/2011 4:41:29 PM

Bayley Construction
3730 S. Susan St.
Suite 200
Santa Ana, CA. 92704
CA. License 734880
Tel 714-540-8863
Fax 714-556-8863

Bayley Construction
8005 S.E. 28th St.
P.O. Box 9004
Mercer Island, WA. 98040
WA. License
BAYLEC034JC
Tel 206-621-8884
Fax 206-343-7728

DLR Group
WWCOT
Architecture Engineering Planning Interiors

4280 Latham Street, Suite H
Riverside, California 92501
T 951.682.0470
F 951.682.1801

wwcot.com
dlrgroup.com

Santa Monica
Sacramento
Riverside
Palm Springs
Modesto
Shanghai, China

Copyright © 2010, DLR Group Inc. of California
DBA DLR Group WWCOT. All Rights Reserved

LICENSED ARCHITECT
JAMES A. MARIE SOUBIRAN
C 24803
9/19/2011
STATE OF CALIFORNIA

Public Agency Submittal:
Issued for Bidding:
Issued for Construction:

#	Revisions:	
1	9/19/2011	Bulletin 1

FOR CONSTRUCTION

Phase I
FOX
ENTERTAINMENT
PLAZA
3605 Market Street
Riverside, CA 92501

City of Riverside

CITY OF RIVERSIDE

3900 Main Street , Riverside, CA 92522

Phase: CD
Revised 02.10.11
DLR Group Project No.75-10603-00

Demolition Plan and Elevation

Issued Date: 02.10.11
Drawn By: Author
Checked By: Checker

A-A102
Sheet №

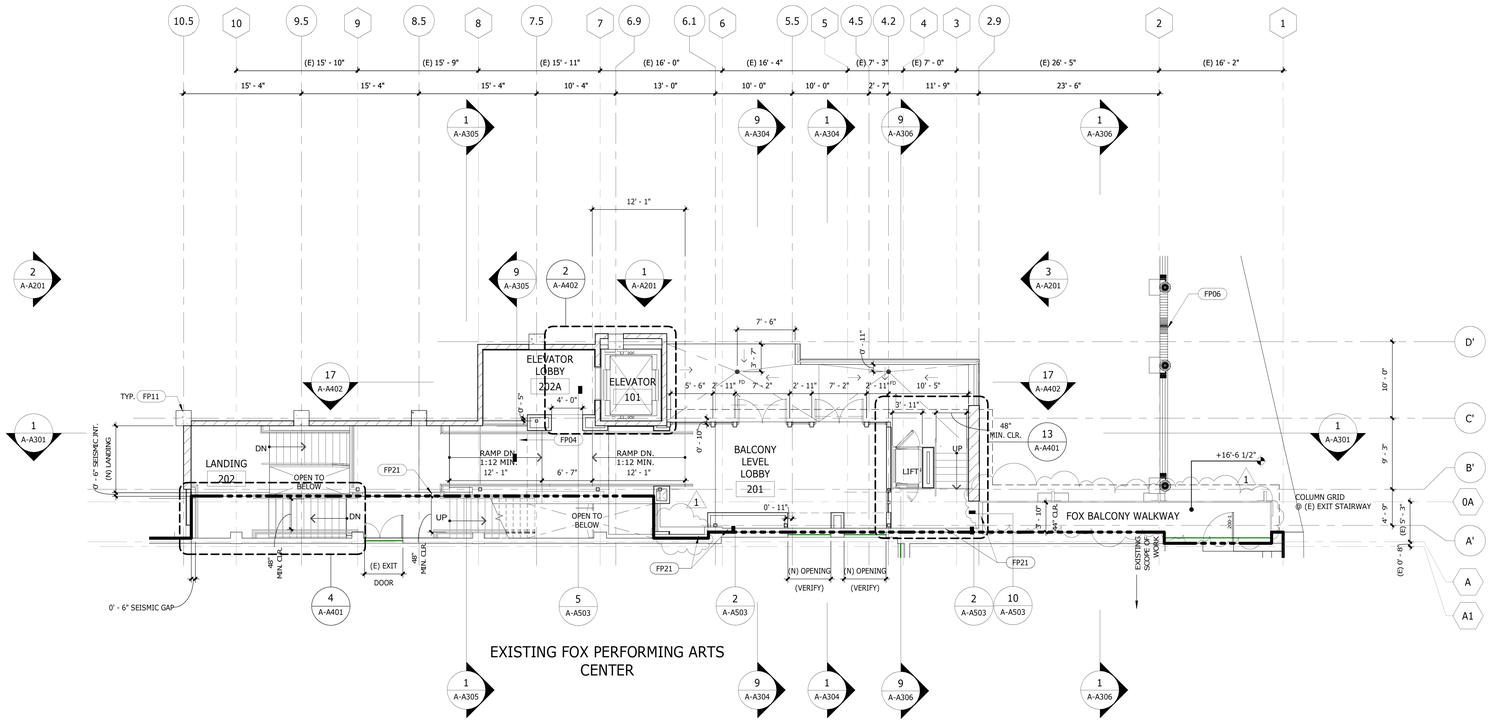

BALCONY LEVEL FLOOR PLAN (858.75")

Scale 1/8" = 1'-0" 3

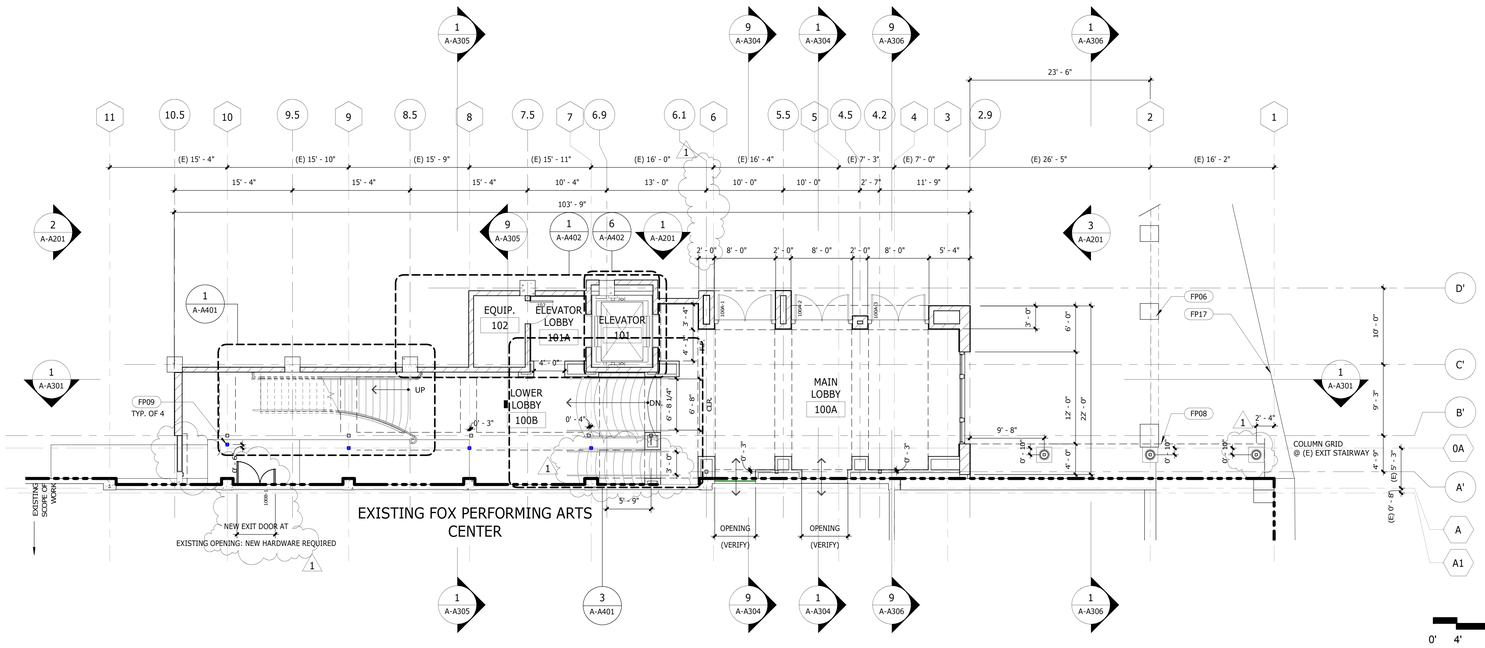

MAIN / ORCHESTRA LEVEL FLOOR PLAN (845.05")

Scale 1/8" = 1'-0" 1

Bayley Construction
3730 S. Susan St.
Suite 200
Santa Ana, CA. 92704
CA. License 734880
Tel 714-540-8863
Fax 714-556-8863

Bayley Construction
8005 S.E. 28th St.
P.O. Box 9004
Mercer Island, WA. 98040
WA. License
BAYLEC034JC
Tel 206-621-8884
Fax 206-343-7728

BAYLEY CONSTRUCTION

DLR Group WWCOT
Architecture Engineering Planning Interiors

4280 Latham Street, Suite H
Riverside, California 92501
T 951.682.0470
F 951.682.1801

wwcot.com
dlrgroup.com

Santa Monica
Sacramento
Riverside
Palm Springs
Modesto
Shanghai, China

Copyright © 2010, DLR Group Inc. of California
DBA DLR Group WWCOT. All Rights Reserved

LICENSED ARCHITECT JAMES MARIE HOLBROOK C 24805 9/19/2011 STATE OF CALIFORNIA

Public Agency Submittal:
Issued for Bidding:
Issued for Construction:

Revisions:

#		
1	9/19/2011	Bulletin 1

FOR CONSTRUCTION

Phase I
FOX
ENTERTAINMENT
PLAZA
3605 Market Street
Riverside, CA 92501

City of Riverside

3900 Main Street , Riverside, CA 92522

Phase: CD
Revised 02.10.11
DLR Group Project No.75-10603-00

Main / Orchestra and
Balcony Level Floor Plans

Issued Date: 02.10.11
Drawn By: Author
Checked By: Checker

A-A111
Sheet №

File Path & Name: C:\Users\cbohigian\Desktop\75-10603-00 Riv Parking Garage 7_Phase 1 local bohigian.rvt
© WWCOT 2009 -- Plotted 9/16/2011 4:41:32 PM

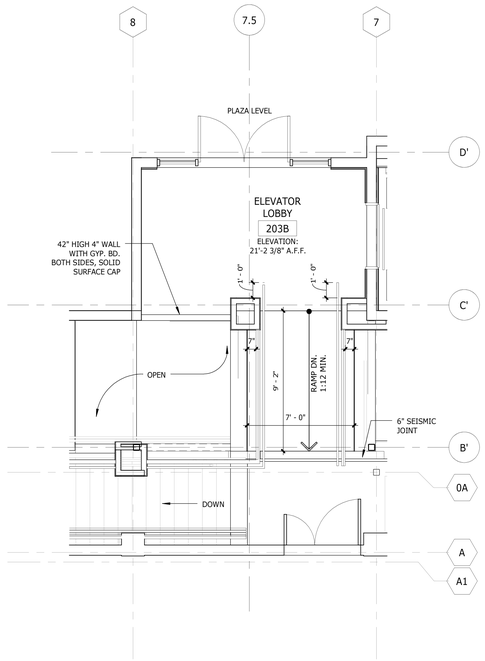

Enlarged Cross-Aisle Level Ramp

Scale 1/4" = 1'-0" 2

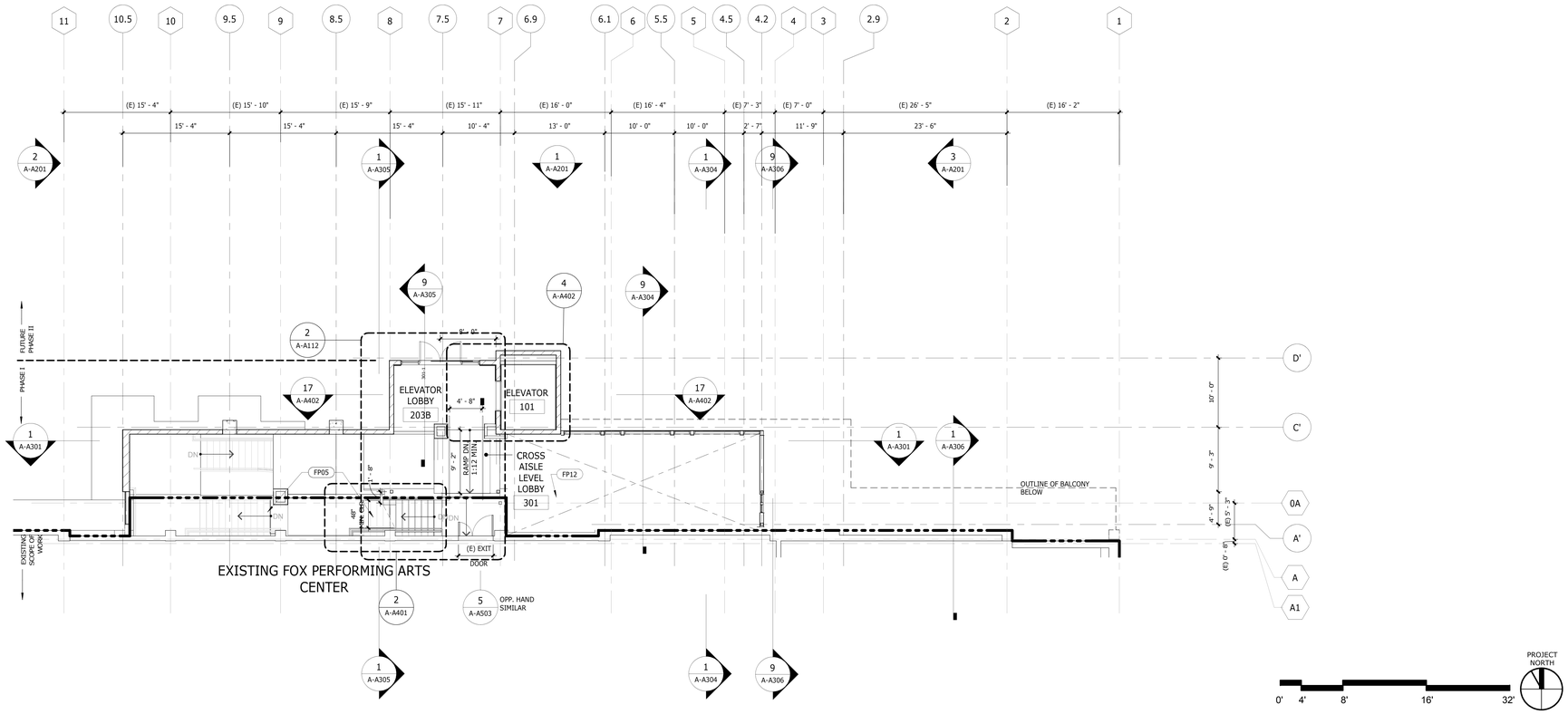

CROSS-AISLE LEVEL FLOOR PLAN (865.47')

Scale 1/8" = 1'-0" 1

Bayley Construction
3730 S. Susan St.
Suite 200
Santa Ana, CA. 92704
CA. License 734880
Tel 714-540-8863
Fax 714-556-8863

Bayley Construction
8005 S.E. 28th St.
P.O. Box 9004
Mercer Island, WA. 98040
WA. License
BAYLEC034JC
Tel 206-621-8884
Fax 206-343-7728

DLR Group
WWCOT
Architecture Engineering Planning Interiors

4280 Latham Street, Suite H
Riverside, California 92501
T 951.682.0470
F 951.682.1801

wwcot.com
dlrgroup.com

Santa Monica
Sacramento
Riverside
Palm Springs
Modesto
Shanghai, China

Copyright © 2010, DLR Group Inc. of California
DBA DLR Group WWCOT. All Rights Reserved

LICENSED ARCHITECT
JAMES A. MARIE SOUBIRAN
C 24803
10/18/2011
STATE OF CALIFORNIA

Public Agency Submittal:
Issued for Bidding:
Issued for Construction:

Revisions:

FOR CONSTRUCTION

Phase I
FOX
ENTERTAINMENT
PLAZA
3605 Market Street
Riverside, CA 92501

City of Riverside

CITY OF RIVERSIDE

3900 Main Street , Riverside, CA 92522

Phase: CD
Revised 02.10.11
DLR Group Project No.75-10603-00

Cross-Aisle Level Floor Plan

Issued Date: 02.10.11
Drawn By: Author
Checked By: Checker

A-A112
Sheet №

File Path & Name: C:\Users\cbohigian\Desktop\75-10603-00 Riv Parking Garage 7_Phase 1 local bohigian.rvt
© WWCOT 2009 -- Plotted 9/16/2011 4:41:36 PM

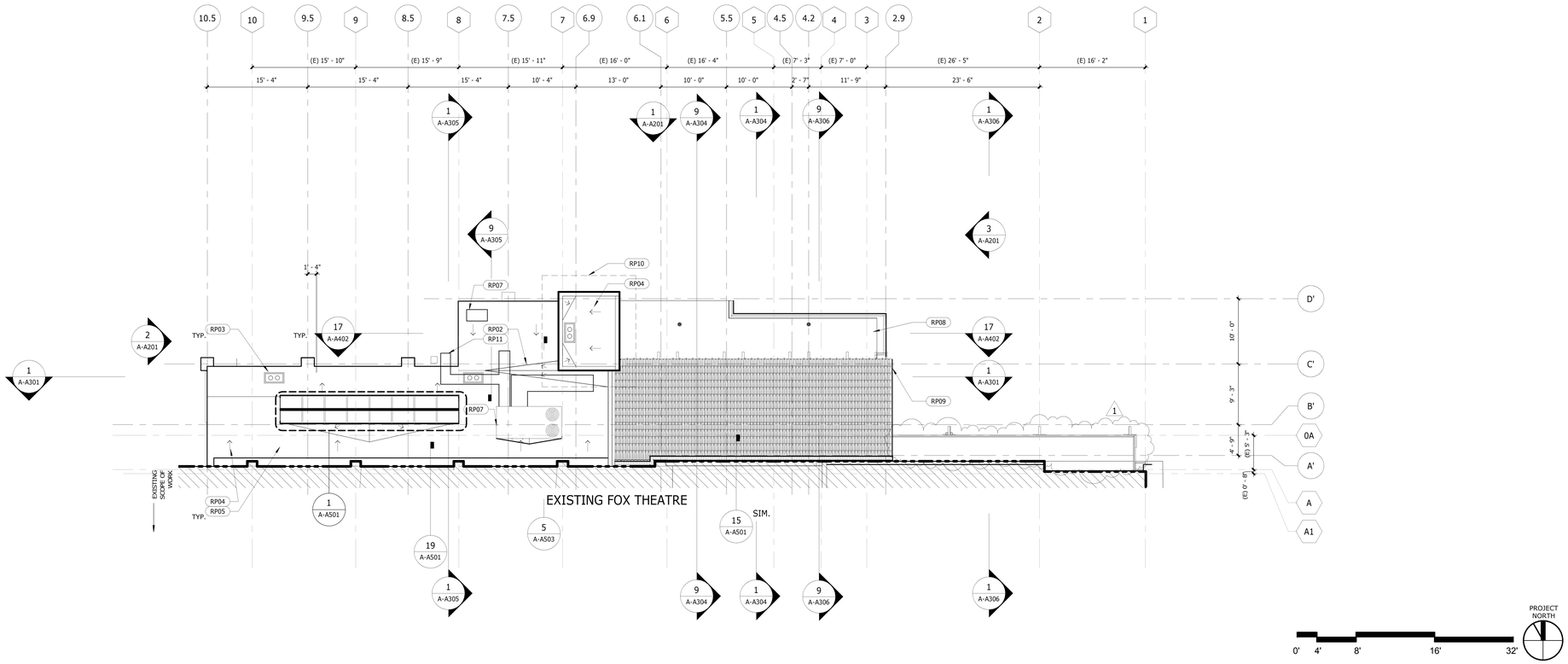

ROOF PLAN

Scale 1/8" = 1'-0"

1

File Path & Name: C:\Users\bohigian\Desktop\75-10603-00 Riv Parking Garage 7_Phase 1 local bohigian.rvt
© WWCOT 2009 – Plotted 9/16/2011 4:41:45 PM

Bayley Construction
3730 S. Susan St.
Suite 200
Santa Ana, CA. 92704
CA. License 734880
Tel 714-540-8863
Fax 714-556-8863

Bayley Construction
8005 S.E. 28th St.
P.O. Box 9004
Mercer Island, WA. 98040
WA. License
BAYLEC034JC
Tel 206-621-8884
Fax 206-343-7728

DLR Group WWCOT
Architecture Engineering Planning Interiors

4280 Latham Street, Suite H
Riverside, California 92501
T 951.682.0470
F 951.682.1801

wwcot.com
dlrgroup.com

Santa Monica
Sacramento
Riverside
Palm Springs
Modesto
Shanghai, China

Copyright © 2010, DLR Group Inc. of California
DBA DLR Group WWCOT. All Rights Reserved

LICENSED ARCHITECT
JAMES M. MARIE HOLBROOK
C 24803
9/19/2011
STATE OF CALIFORNIA

Public Agency Submittal:
Issued for Bidding:
Issued for Construction:

Revisions:

#		
1	9/19/2011	Bulletin 1

FOR CONSTRUCTION

Phase I
FOX
ENTERTAINMENT
PLAZA
3605 Market Street
Riverside, CA 92501

City of Riverside

CITY OF RIVERSIDE

3900 Main Street , Riverside, CA 92522

Phase: CD
Revised 02.10.11
DLR Group Project No.75-10603-00

Roof Plan

Issued Date: 02.10.11
Drawn By: Author
Checked By: Checker

A-A113

Sheet №

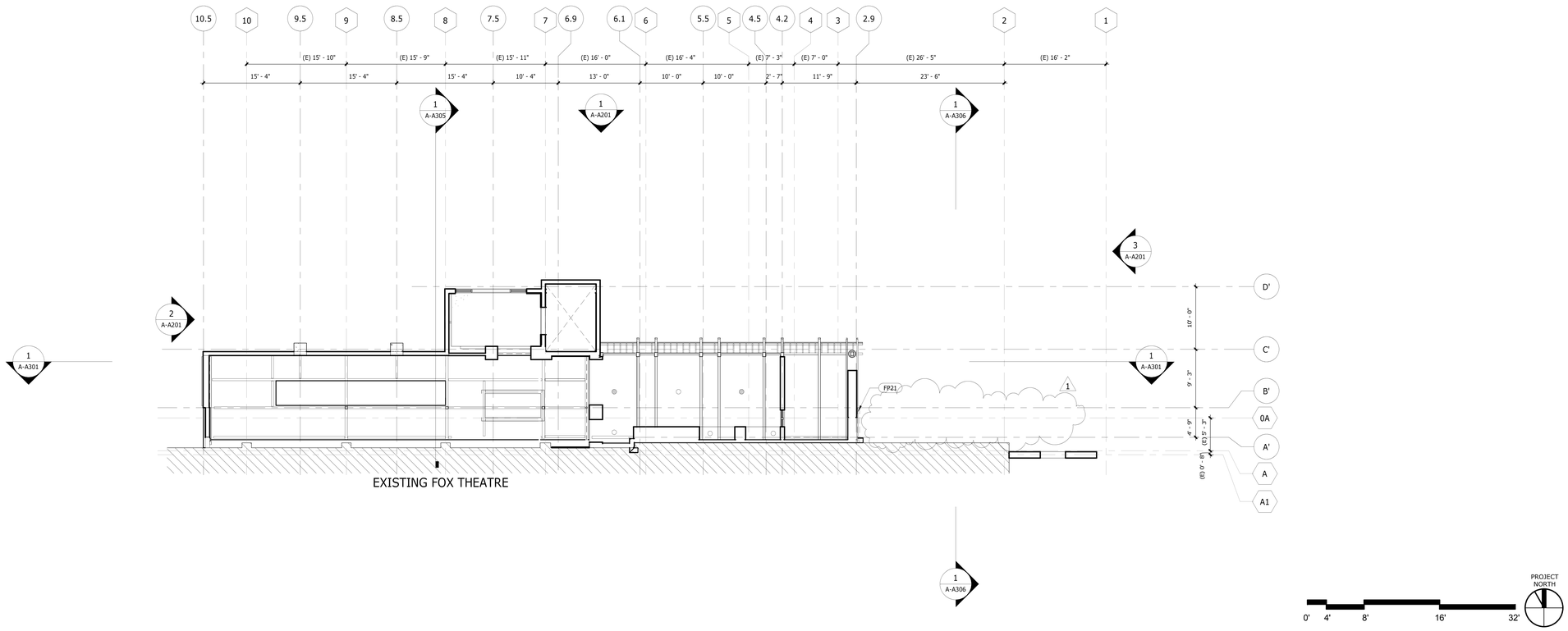

BALCONY LEVEL RCP

Scale 1/8" = 1'-0" 3

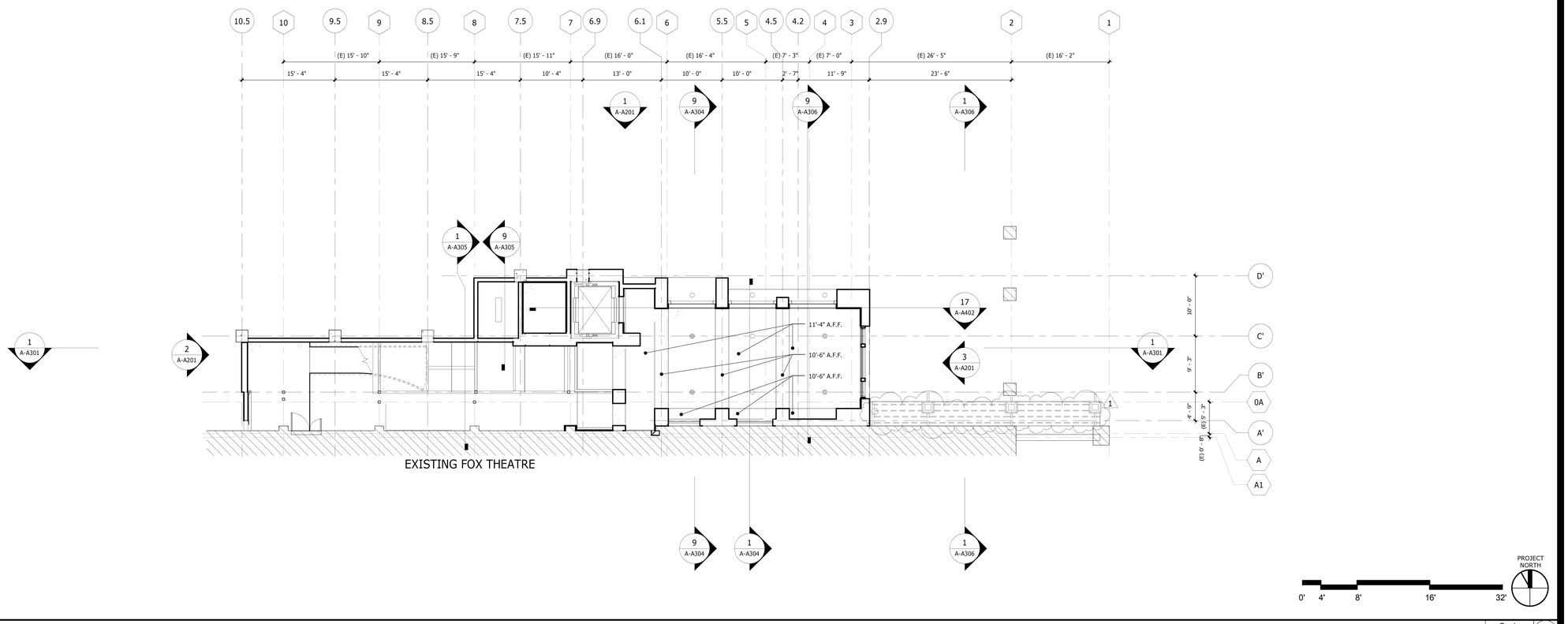

MAIN / ORCHESTRA LEVEL RCP

Scale 1/8" = 1'-0" 1

Bayley Construction
3730 S. Susan St.
Suite 200
Santa Ana, CA. 92704
CA. License 734880
Tel 714-540-8863
Fax 714-556-8863

Bayley Construction
8005 S.E. 28th St.
P.O. Box 9004
Mercer Island, WA. 98040
WA. License
BAYLECO034JC
Tel 206-621-8884
Fax 206-343-7728

DLR Group WWCOT
Architecture Engineering Planning Interiors

4280 Latham Street, Suite H
Riverside, California 92501
T 951.682.0470
F 951.682.1801

wwcot.com
dlrgroup.com

Santa Monica
Sacramento
Riverside
Palm Springs
Modesto
Shanghai, China

Copyright © 2010, DLR Group Inc. of California
DBA DLR Group WWCOT. All Rights Reserved

LICENSED ARCHITECT
JAMES A. MARIE SOUBIRAN
C 24407
9/19/2011
STATE OF CALIFORNIA

Public Agency Submittal:
Issued for Bidding:
Issued for Construction:

Revisions:

#		
1	9/19/2011	Bulletin 1

FOR CONSTRUCTION

Phase I
FOX
ENTERTAINMENT
PLAZA
3605 Market Street
Riverside, CA 92501

City of Riverside

3900 Main Street , Riverside, CA 92522

Phase: CD
Revised 02.10.11
DLR Group Project No.75-10603-00

Ceiling Plans

Issued Date: 02.10.11
Drawn By: Author
Checked By: Checker

A-A121
Sheet №

File Path & Name: C:\Users\sbohigian\Desktop\75-10603-00 Riv Parking Garage 7_Phase 1 local bohigian.rvt
© WWCOT 2009 -- Plotted 9/16/2011 4:41:50 PM

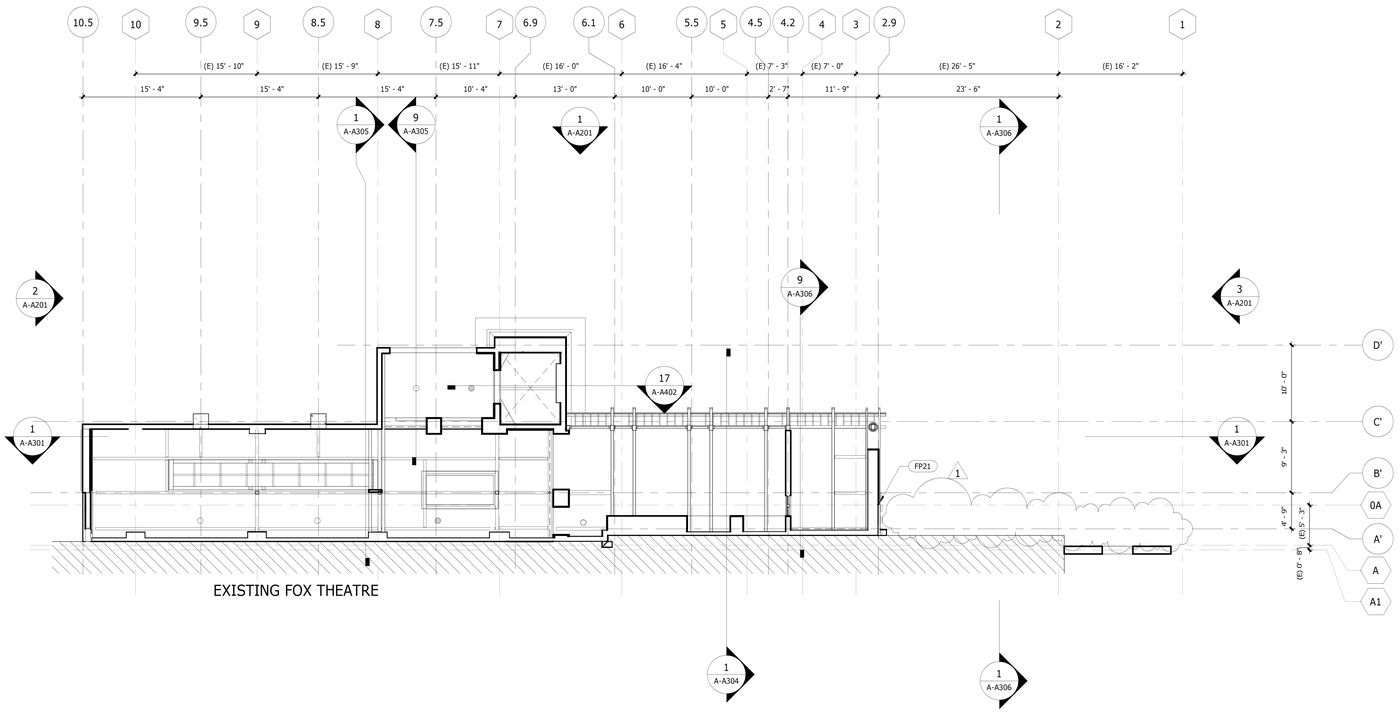

CROSS-AISLE LEVEL RCP

Scale 1/8" = 1'-0"

1

File Path & Name: C:\Users\bohigian\Desktop\75-10603-00 Rev Parking Garage 7_Phase 1 local bohigian.rvt
© WWCOT 2009 – Plotted 9/16/2011 4:41:53 PM

Bayley Construction
3730 S. Susan St.
Suite 200
Santa Ana, CA. 92704
CA. License 734880
Tel 714-540-8863
Fax 714-556-8863

Bayley Construction
8005 S.E. 28th St.
P.O. Box 9004
Mercer Island, WA. 98040
WA. License
BAYLEC034JC
Tel 206-621-8884
Fax 206-343-7728

DLR Group
WWCOT
Architecture Engineering Planning Interiors

4280 Latham Street, Suite H
Riverside, California 92501
T 951.682.0470
F 951.682.1801

wwcot.com
dlrgroup.com

Santa Monica
Sacramento
Riverside
Palm Springs
Modesto
Shanghai, China

Copyright © 2010, DLR Group Inc. of California
DBA DLR Group WWCOT. All Rights Reserved

LICENSED ARCHITECT
JAMES MARIE HOLBROOK
C 24803
9/19/2011
STATE OF CALIFORNIA

Public Agency Submittal:
Issued for Bidding:
Issued for Construction:

Revisions:

1 9/19/2011 Bulletin 1

FOR CONSTRUCTION

Phase I FOX ENTERTAINMENT PLAZA

3605 Market Street
Riverside, CA 92501

City of Riverside

CITY OF RIVERSIDE

3900 Main Street , Riverside, CA 92522

Phase: CD
Revised 02.10.11
DLR Group Project No.75-10603-00

Ceiling Plans

Issued Date: 02.10.11
Drawn By: Author
Checked By: Checker

A-A122

Sheet №

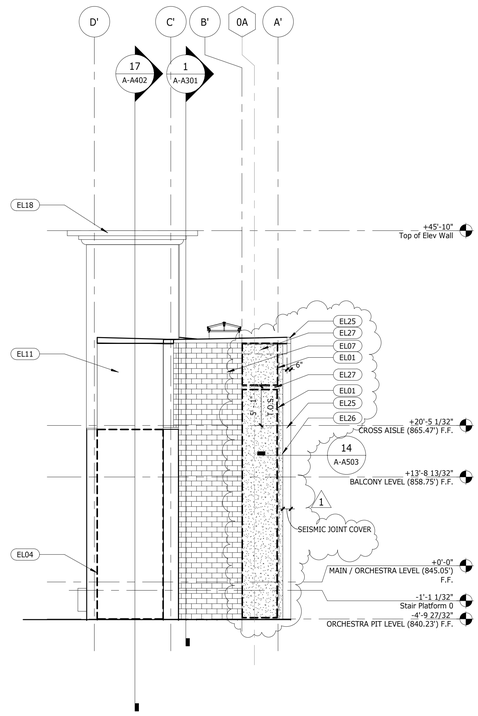

WEST ELEVATION

Scale 1/8" = 1'-0" 2

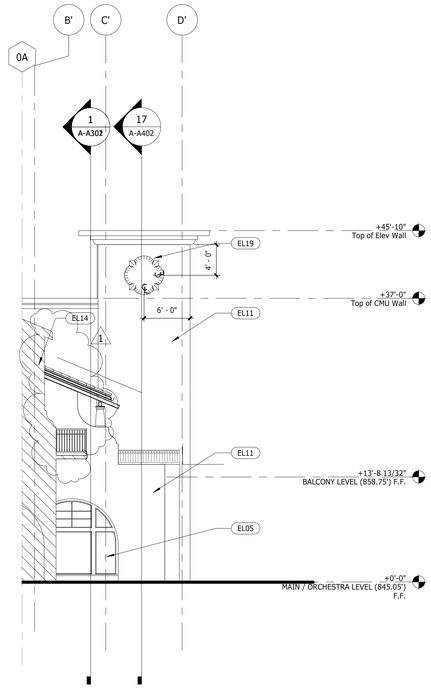

EAST ELEVATION

Scale 1/8" = 1'-0" 3

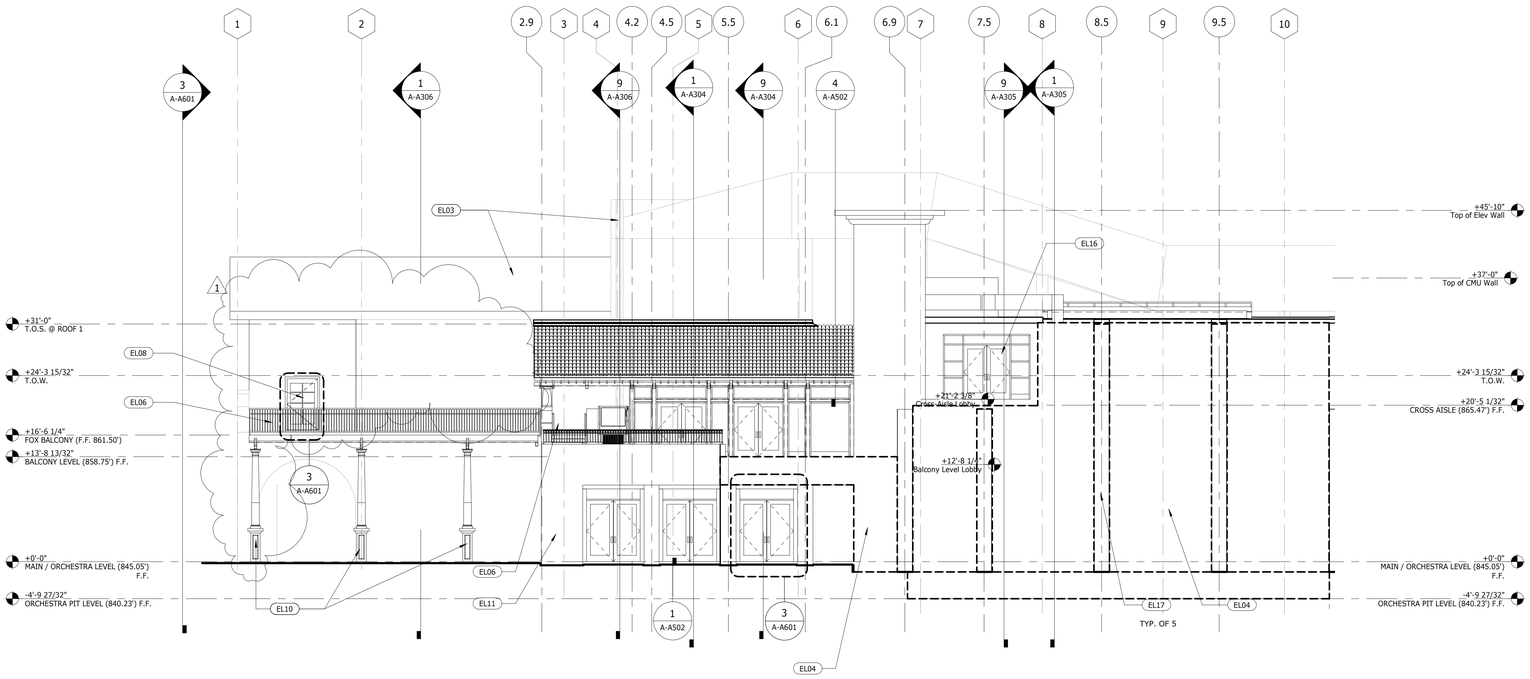

NORTH ELEVATION

Scale 1/8" = 1'-0" 1

File Path & Name: C:\Users\aemam\Documents\75-10603-00 Riv Parking Garage 7_Phase 1_aemine.rvt

© WWCOT 2009 -- Plotted 9/19/2011 11:07:03 AM

Bayley Construction
3730 S. Susan St.
Suite 200
Santa Ana, CA. 92704
CA. License 734880
Tel 714-540-8863
Fax 714-556-8863

Bayley Construction
8005 S.E. 28th St.
P.O. Box 9004
Mercer Island, WA. 98040
WA. License
BAYLEC034JC
Tel 206-621-8884
Fax 206-343-7728

BAYLEY CONSTRUCTION

DLR Group WWCOT
Architecture Engineering Planning Interiors

4280 Latham Street, Suite H
Riverside, California 92501
T 951.682.0470
F 951.682.1801

wwcot.com
dlrgroup.com

Santa Monica
Sacramento
Riverside
Palm Springs
Modesto
Shanghai, China

Copyright © 2010, DLR Group Inc. of California
DBA DLR Group WWCOT. All Rights Reserved

LICENSED ARCHITECT
SAMIRA MARIE YOUSSEF
C-24903
12/31/2011
STATE OF CALIFORNIA

Public Agency Submittal:
Issued for Bidding:
Issued for Construction:

#	Revisions:	
1	9/19/2011	Bulletin 1

FOR CONSTRUCTION

Phase I
FOX
ENTERTAINMENT
PLAZA
3605 Market Street
Riverside, CA 92501

City of Riverside

CITY OF RIVERSIDE

3900 Main Street , Riverside, CA 92522

Phase: CD
Revised 02.10.11
DLR Group Project No.75-10603-00

Building Elevations

Issued Date: 02.10.11
Drawn By: Author
Checked By: Checker

A-A201
Sheet №

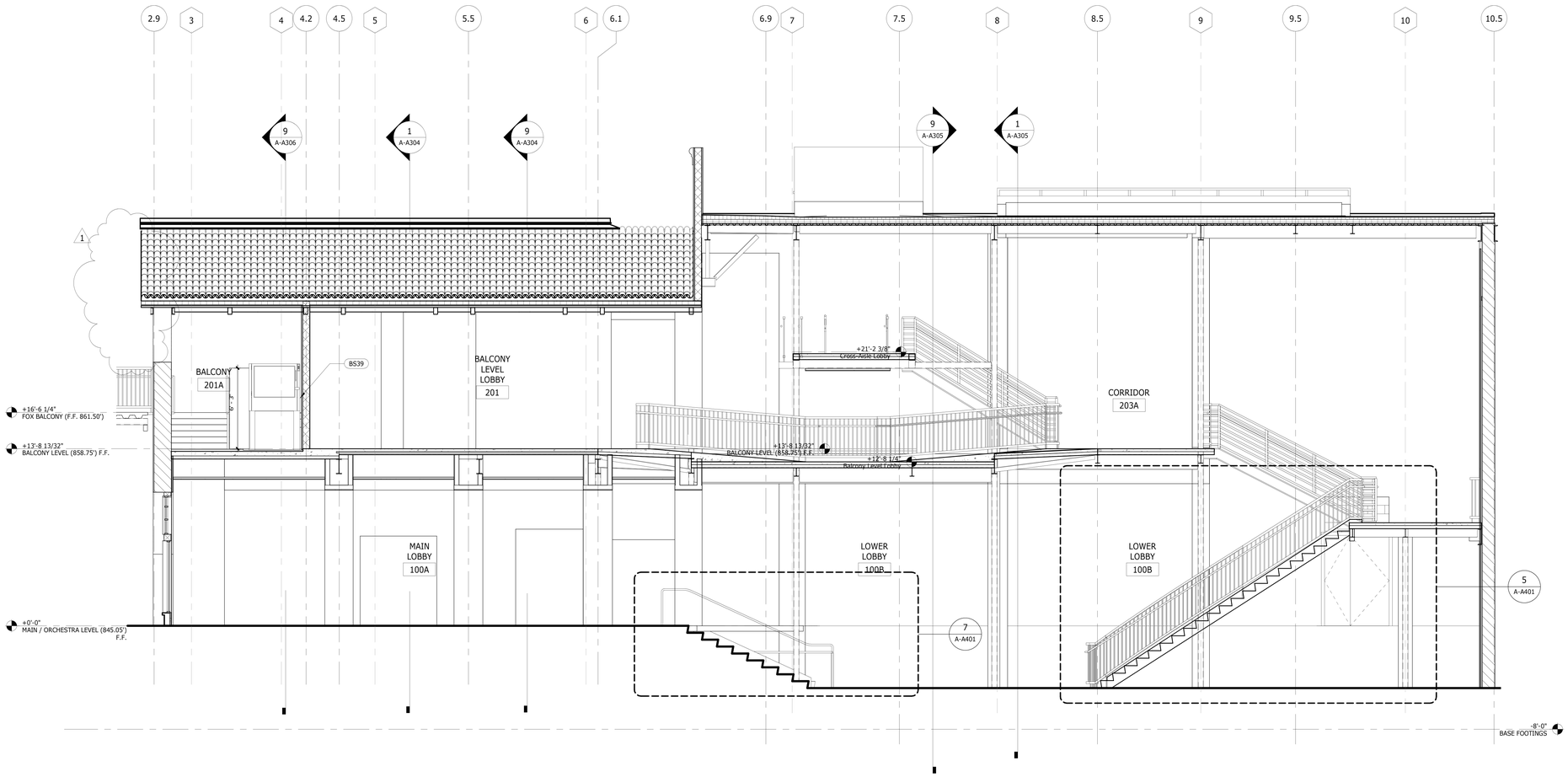

LOBBY SECTION THRU STAIRS COMPLETE

Scale
1/4" = 1'-0"
1

File Path & Name: C:\Users\cbohigian\Desktop\75-10603-00 Riv Parking Garage 7_Phase 1 local bohigian.rvt
© WWCOT 2009 -- Plotted 9/16/2011 4:42:23 PM

Bayley Construction
3730 S. Susan St.
Suite 200
Santa Ana, CA. 92704
CA. License 734880
Tel 714-540-8863
Fax 714-556-8863

Bayley Construction
8005 S.E. 28th St.
P.O. Box 9004
Mercer Island, WA. 98040
WA. License
BAYLEC034JC
Tel 206-621-8884
Fax 206-343-7728

BAYLEY CONSTRUCTION

DLR Group
WWCOT
Architecture Engineering Planning Interiors

4280 Latham Street, Suite H
Riverside, California 92501
T 951.682.0470
F 951.682.1801

wwcot.com
dlrgroup.com

Santa Monica
Sacramento
Riverside
Palm Springs
Modesto
Shanghai, China

Copyright © 2010, DLR Group Inc. of California
DBA DLR Group WWCOT. All Rights Reserved

LICENSED ARCHITECT
JAMES A. MARIE SOUBIRAN
C 24803
9/19/2011
STATE OF CALIFORNIA

Public Agency Submittal:
Issued for Bidding:
Issued for Construction:

Revisions:

#		
1	9/19/2011	Bulletin 1

FOR CONSTRUCTION

Phase I
FOX
ENTERTAINMENT
PLAZA
3605 Market Street
Riverside, CA 92501

City of Riverside

CITY OF RIVERSIDE

3900 Main Street , Riverside, CA 92522

Phase: CD
Revised 02.10.11
DLR Group Project No.75-10603-00

Building Sections

Issued Date: 02.10.11
Drawn By: Author
Checked By: Checker

A-A301
Sheet №

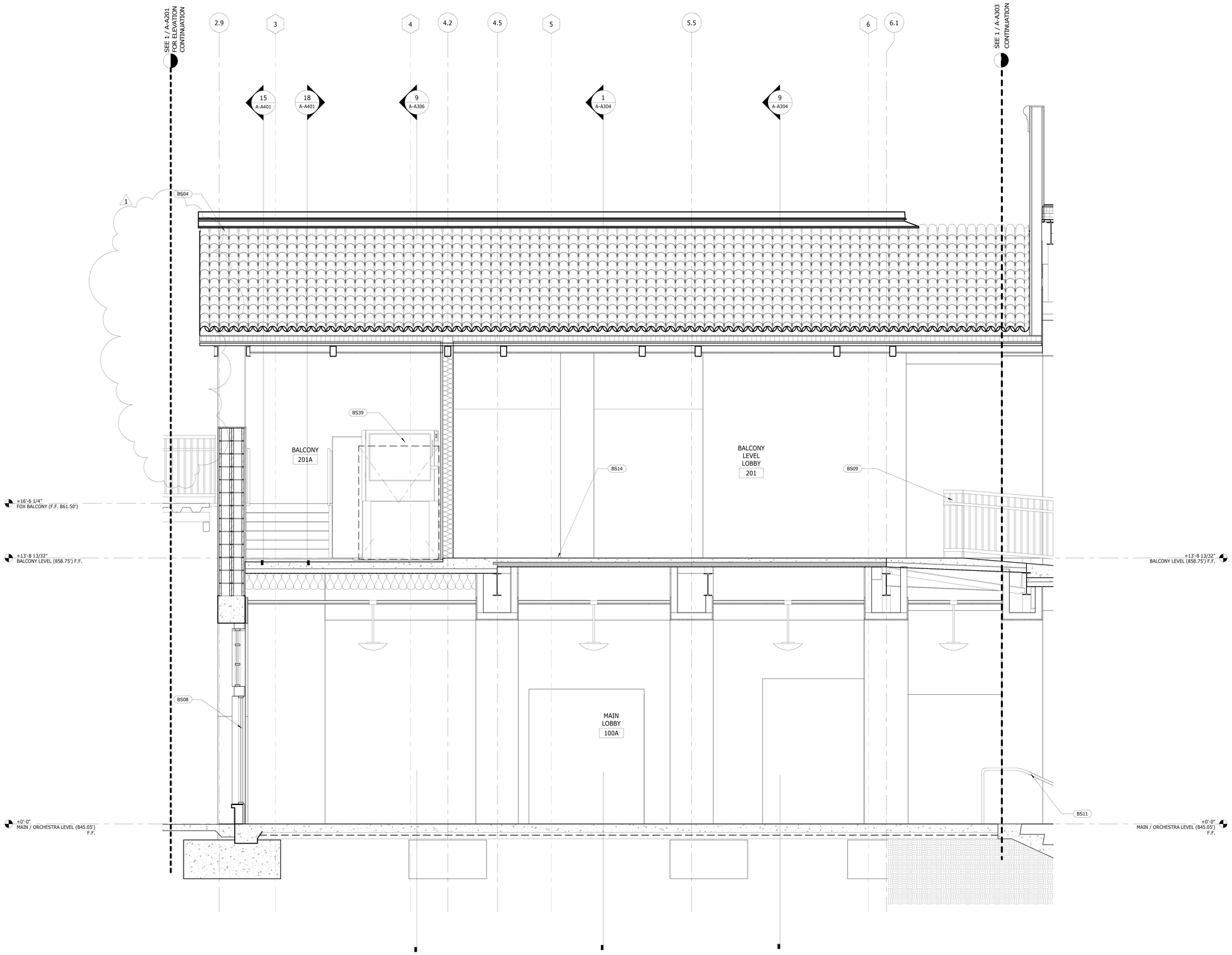

LOBBY SECTION THRU STAIRS, CONTINUED

Scale 1/2" = 1'-0" | 1

File Path & Name: C:\Users\bobigian\Desktop\75-10603-00 Riv Parking Garage 7_Phase 1 local bobigian.rvt
© WWCOT 2009 - Plotted 9/16/2011 4:42:38 PM

Bayley Construction
3730 S. Susan St.
Suite 200
Santa Ana, CA. 92704
CA. License 734880
Tel 714-540-8863
Fax 714-556-8863

Bayley Construction
8005 S.E. 28th St.
P.O. Box 9004
Mercer Island, WA. 98040
WA. License
BAYLECO034JC
Tel 206-621-8884
Fax 206-343-7728

BAYLEY CONSTRUCTION

DLR Group WWCOT
Architecture Engineering Planning Interiors

4280 Latham Street, Suite H
Riverside, California 92501
T 951.682.0470
F 951.682.1801

wwcot.com
dlrgroup.com

Santa Monica
Sacramento
Riverside
Palm Springs
Modesto
Shanghai, China

Copyright © 2010, DLR Group Inc. of California
DBA DLR Group WWCOT. All Rights Reserved

LICENSED ARCHITECT
JAMES A. MARIE SOUBIRAN
C 24803
9/19/2011
STATE OF CALIFORNIA

Public Agency Submittal:
Issued for Bidding:
Issued for Construction:

Revisions:

#		
1	9/19/2011	Bulletin 1

FOR CONSTRUCTION

Phase I FOX ENTERTAINMENT PLAZA

3605 Market Street
Riverside, CA 92501

City of Riverside

CITY OF RIVERSIDE

3900 Main Street , Riverside, CA 92522

Phase: CD
Revised 02.10.11
DLR Group Project No.75-10603-00

Building Sections

Issued Date: 02.10.11
Drawn By: Author
Checked By: Checker

A-A302
Sheet №

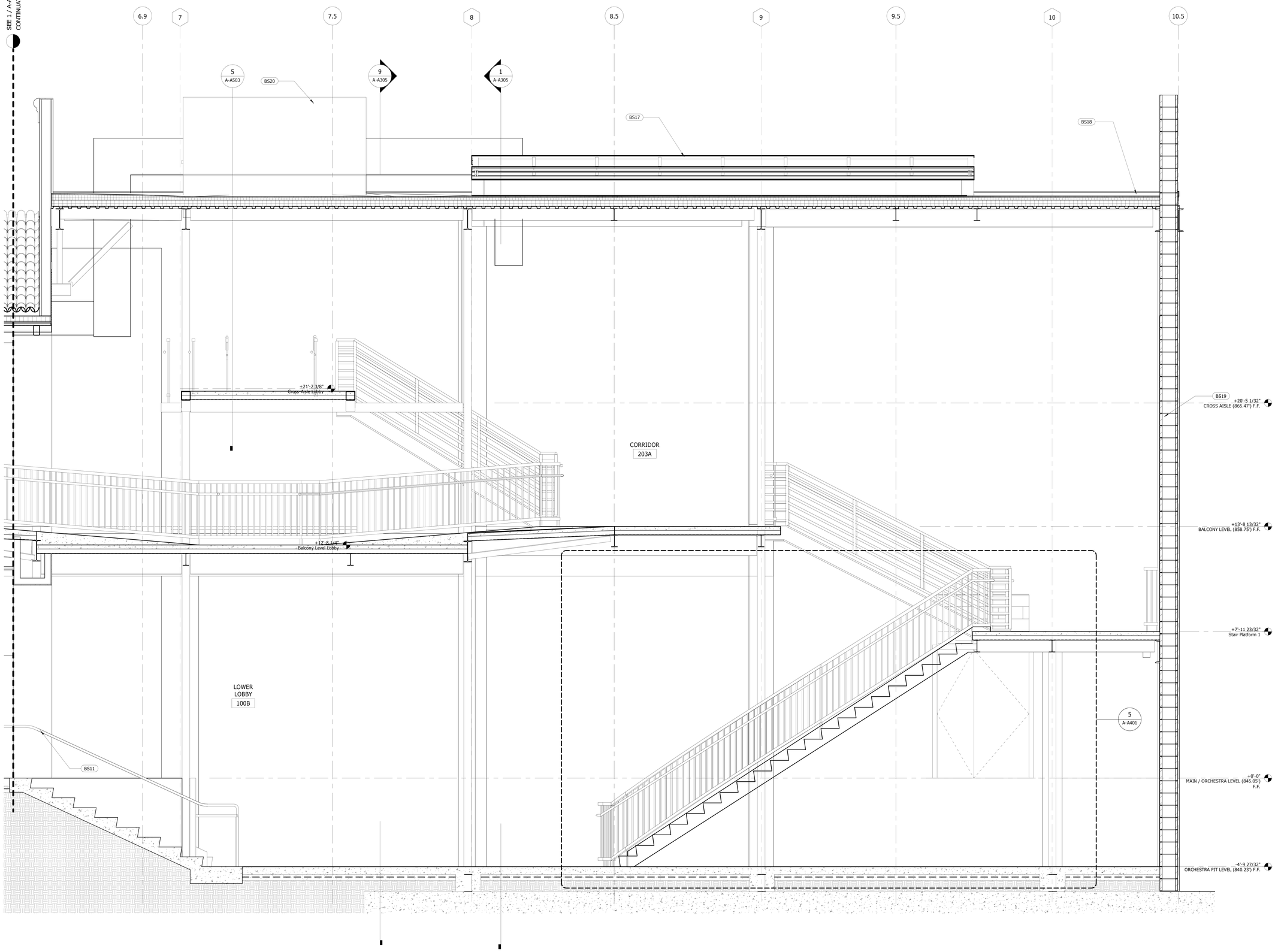

LOBBY SECTION THRU STAIRS

Scale 1/2" = 1'-0"

1

Bayley Construction
3730 S. Susan St.
Suite 200
Santa Ana, CA. 92704
CA. License 734880
Tel 714-540-8863
Fax 714-556-8863

Bayley Construction
8005 S.E. 28th St.
P.O. Box 9004
Mercer Island, WA. 98040
WA. License
BAYLEC034JC
Tel 206-621-8884
Fax 206-343-7728

BAYLEY CONSTRUCTION

DLR Group
WWCOT
Architecture Engineering Planning Interiors

4280 Latham Street, Suite H
Riverside, California 92501
T 951.682.0470
F 951.682.1801

wwcot.com
dlrgroup.com

Santa Monica
Sacramento
Riverside
Palm Springs
Modesto
Shanghai, China

Copyright © 2010, DLR Group Inc. of California
DBA DLR Group WWCOT. All Rights Reserved

LICENSED ARCHITECT
JAMES MARIE HOLZHEIMER
C 24803
09/28/2011
STATE OF CALIFORNIA

Public Agency Submittal:
Issued for Bidding:
Issued for Construction:

Revisions:

FOR CONSTRUCTION

Phase I
FOX
ENTERTAINMENT
PLAZA
3605 Market Street
Riverside, CA 92501

City of Riverside

CITY OF RIVERSIDE

3900 Main Street , Riverside, CA 92522

Phase: CD
Revised 02.10.11
DLR Group Project No.75-10603-00

Building Sections

Issued Date: 02.10.11
Drawn By: Author
Checked By: Checker

A-A303
Sheet №

File Path & Name: C:\Users\cbohigian\Desktop\75-10603-00 Riv Parking Garage 7_Phase 1 local bohigian.rvt
© WWCOT 2009 – Plotted 9/16/2011 4:42:46 PM

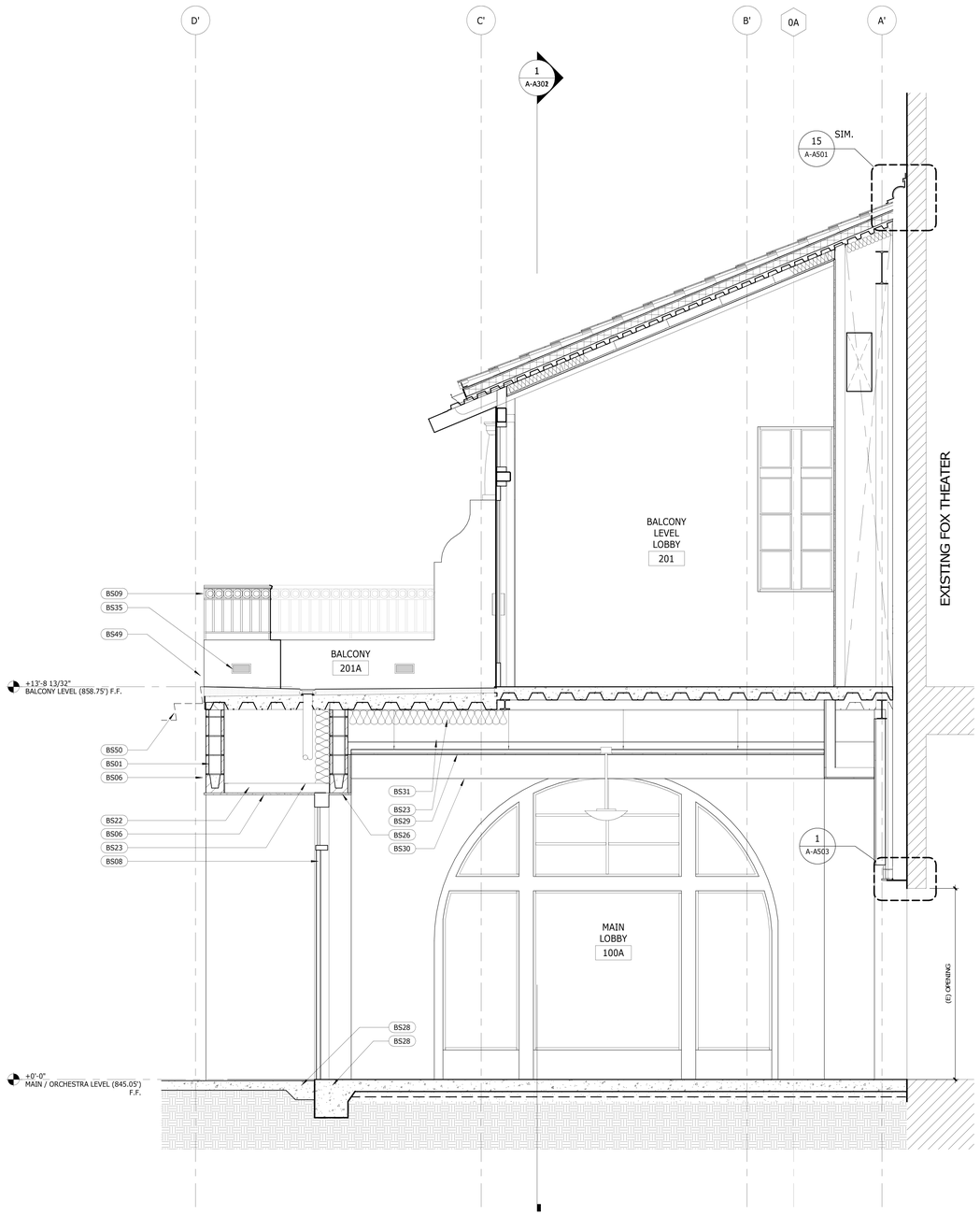

SECTION THRU LOBBY NEAR GRID LINE 6

Scale 1/2" = 1'-0" 9

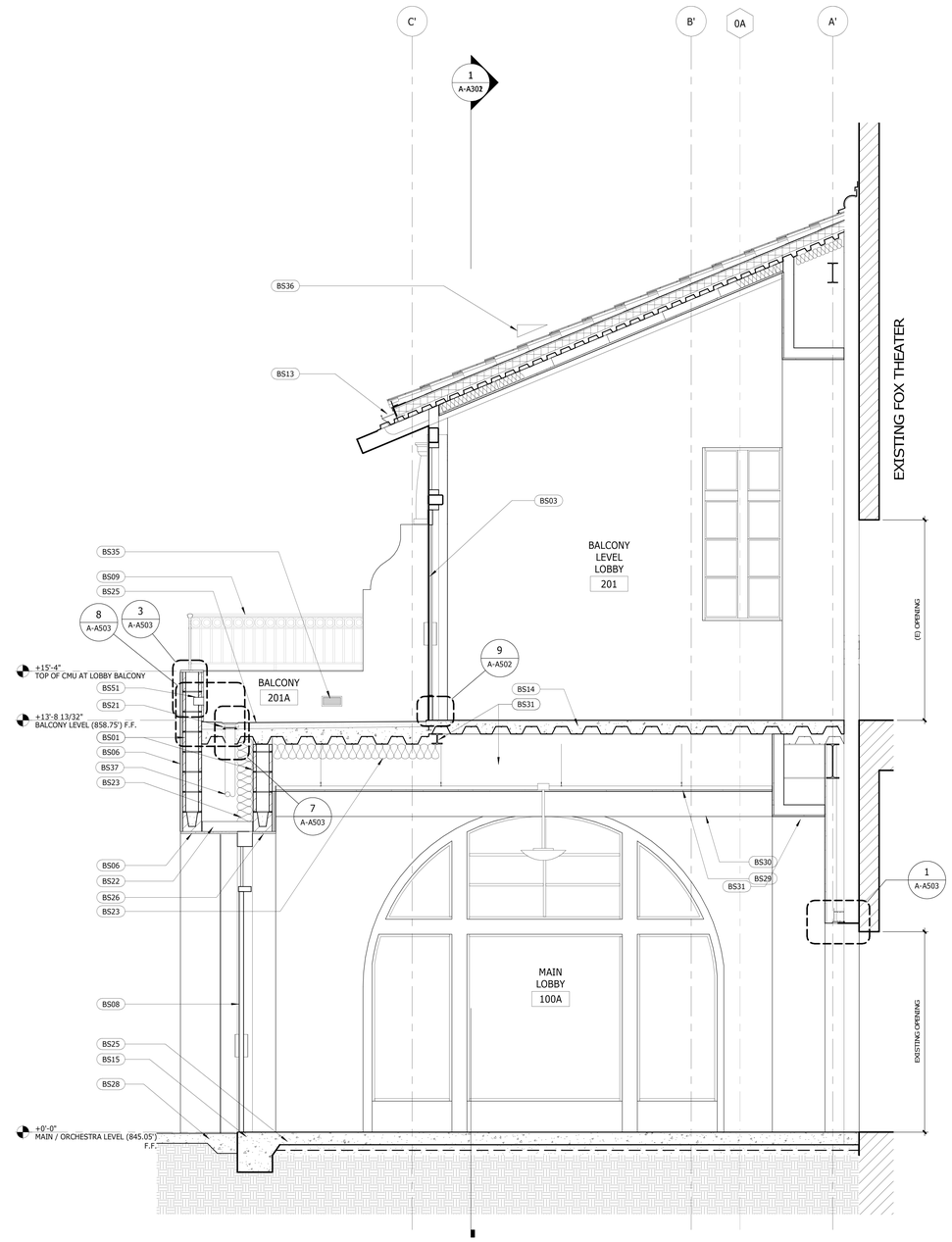

SECTION THRU LOBBY NEAR GRID LINE 5

Scale 1/2" = 1'-0" 1

Bayley Construction
3730 S. Susan St.
Suite 200
Santa Ana, CA. 92704
CA. License 734880
Tel 714-540-8863
Fax 714-556-8863

Bayley Construction
8005 S.E. 28th St.
P.O. Box 9004
Mercer Island, WA. 98040
WA. License
BAYLEC034JC
Tel 206-621-8884
Fax 206-343-7728

BAYLEY CONSTRUCTION

DLR Group
WWCOT
Architecture Engineering Planning Interiors

4280 Latham Street, Suite H
Riverside, California 92501
T 951.682.0470
F 951.682.1801

wwcot.com
dlrgroup.com

Santa Monica
Sacramento
Riverside
Palm Springs
Modesto
Shanghai, China

Copyright © 2010, DLR Group Inc. of California
DBA DLR Group WWCOT. All Rights Reserved

LICENSED ARCHITECT
JAMES MARIE SOLDIGNE
C 24807
10/31/2011
STATE OF CALIFORNIA

Public Agency Submittal:
Issued for Bidding:
Issued for Construction:

Revisions:

FOR CONSTRUCTION

Phase I
FOX
ENTERTAINMENT
PLAZA
3605 Market Street
Riverside, CA 92501

City of Riverside

CITY OF RIVERSIDE

3900 Main Street , Riverside, CA 92522

Phase: CD
Revised 02.10.11
DLR Group Project No.75-10603-00

Building Sections

Issued Date: 02.10.11
Drawn By: Author
Checked By: Checker

A-A304
Sheet №

File Path & Name: C:\Users\sbohigian\Desktop\75-10603-00 Riv Parking Garage 7_Phase 1 local bohigian.rvt
© WWCOT 2009 -- Plotted 9/16/2011 4:42:53 PM

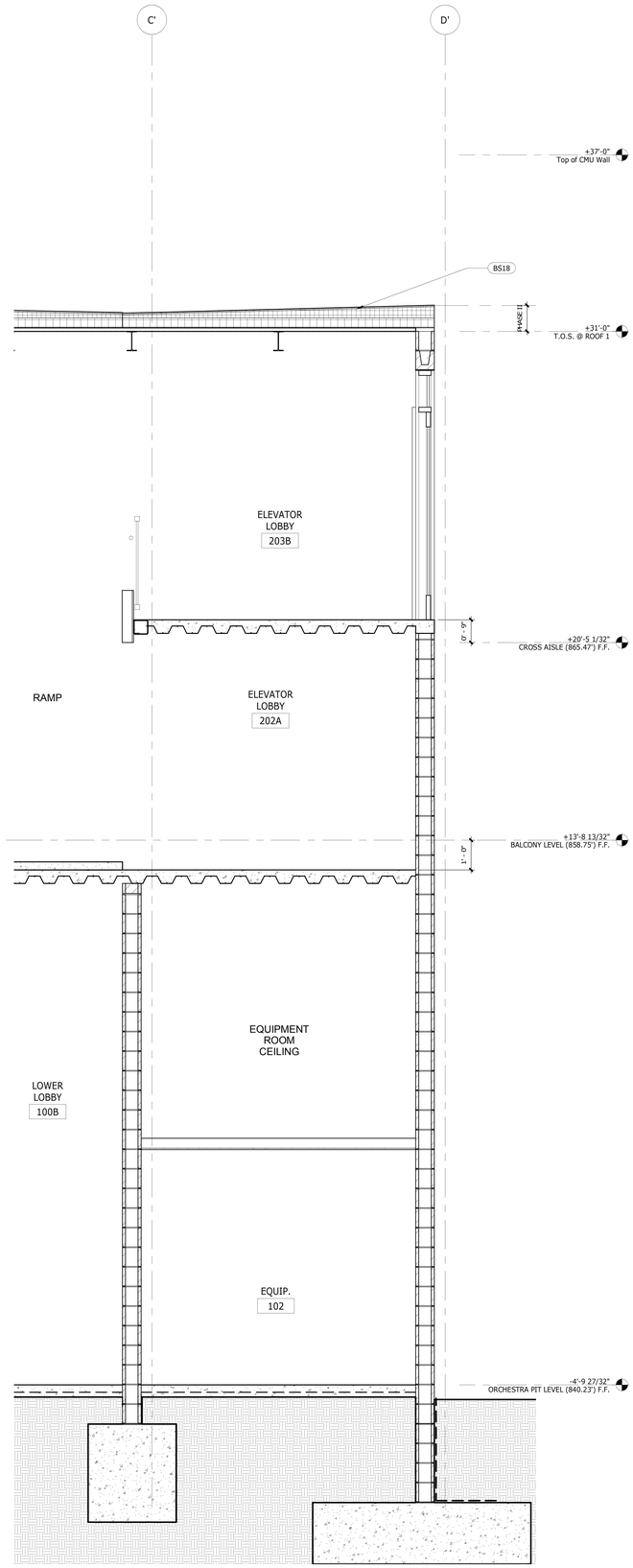

SECTION THRU EQUIPMENT ROOM

Scale 1/2" = 1'-0" 9

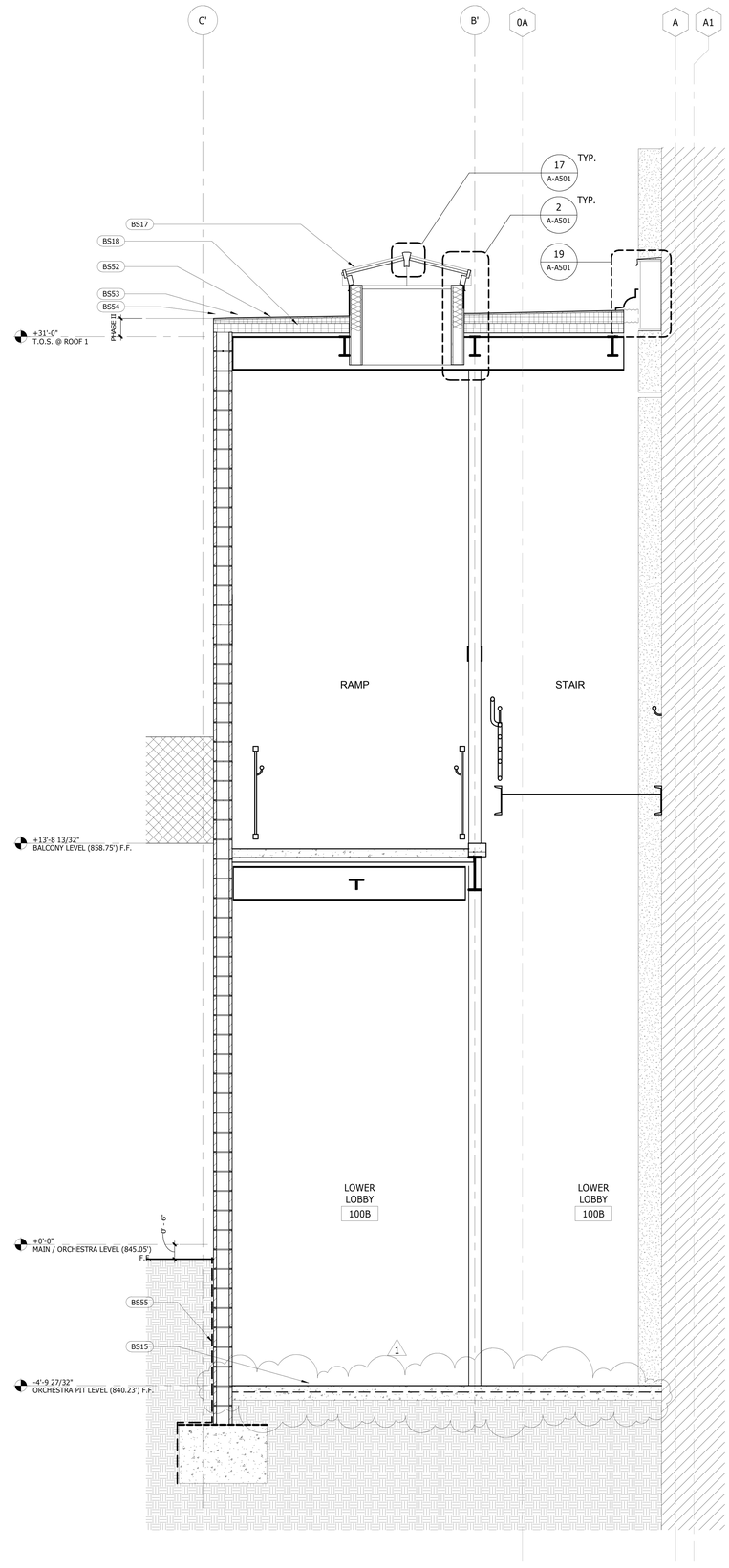

SECTION THRU LOWER LOBBY NEAR GRID LINE 8

Scale 1/2" = 1'-0" 1

File Path & Name: C:\Users\bohigian\Desktop\75-10603-00 Riv Parking Garage 7_Phase 1 local bohigian.rvt
© WWCOT 2009 – Plotted 9/16/2011 4:42:59 PM

Bayley Construction
3730 S. Susan St.
Suite 200
Santa Ana, CA. 92704
CA. License 734880
Tel 714-540-8863
Fax 714-556-8863

Bayley Construction
8005 S.E. 28th St.
P.O. Box 9004
Mercer Island, WA. 98040
WA. License
BAYLECO034JC
Tel 206-621-8884
Fax 206-343-7728

DLR Group
WWCOT
Architecture Engineering Planning Interiors

4280 Latham Street, Suite H
Riverside, California 92501
T 951.682.0470
F 951.682.1801

wwcot.com
dlrgroup.com

Santa Monica
Sacramento
Riverside
Palm Springs
Modesto
Shanghai, China

Copyright © 2010, DLR Group Inc. of California
DBA DLR Group WWCOT. All Rights Reserved

LICENSED ARCHITECT
JAMES A. MARIE HOLBROOK
C 24803
9/19/2011
STATE OF CALIFORNIA

Public Agency Submittal:
Issued for Bidding:
Issued for Construction:

Revisions:

#		
1	9/19/2011	Bulletin 1

FOR CONSTRUCTION

Phase I
FOX
ENTERTAINMENT
PLAZA
3605 Market Street
Riverside, CA 92501

City of Riverside

3900 Main Street , Riverside, CA 92522

Phase: CD
Revised 02.10.11
DLR Group Project No.75-10603-00

Building Sections

Issued Date: 02.10.11
Drawn By: Author
Checked By: Checker

A-A305
Sheet №

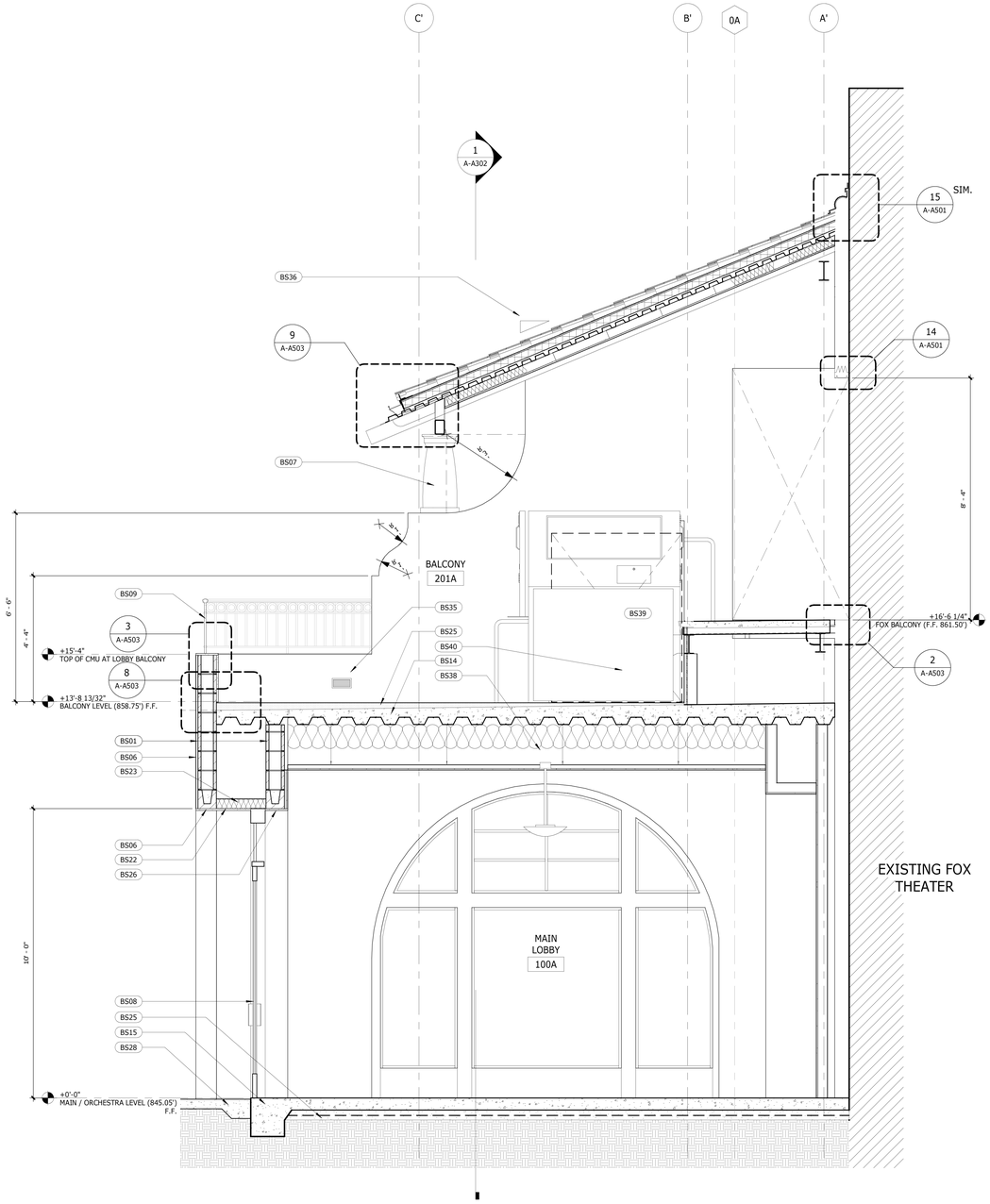

SECTION THRU LOBBY NEAR GRID LINE 4

Scale 1/2" = 1'-0" 9

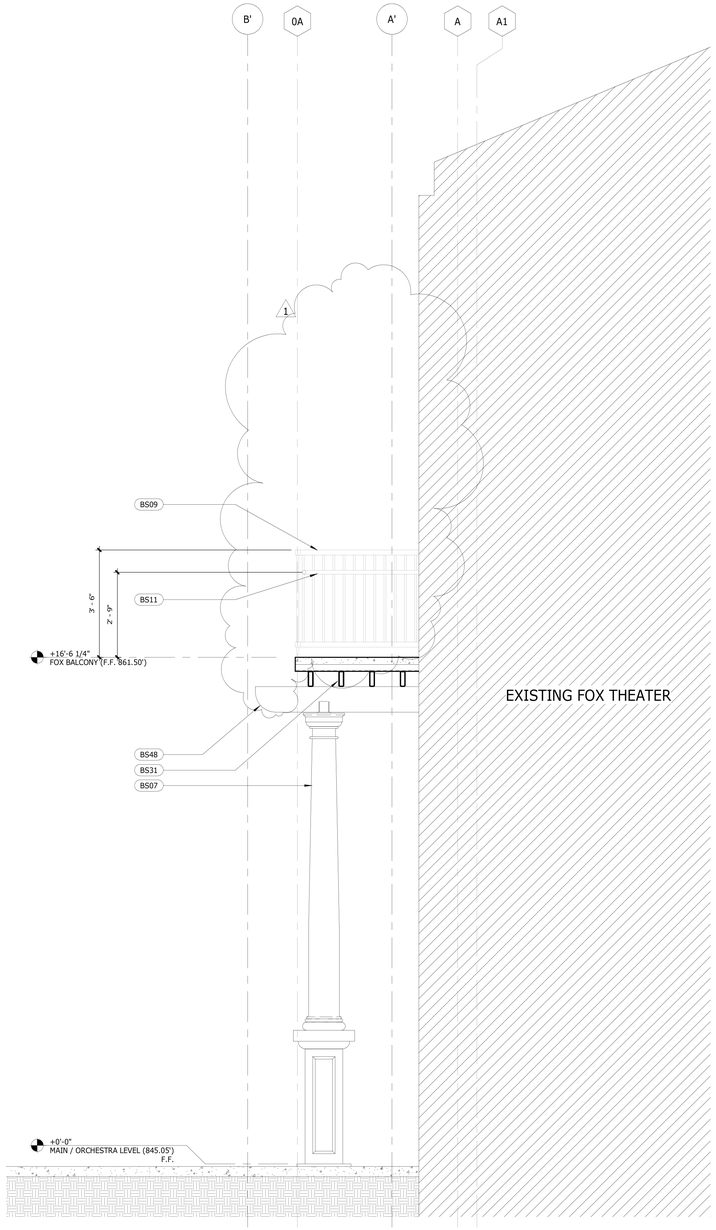

SECTION THRU BALCONY

Scale 1/2" = 1'-0" 1

Bayley Construction
3730 S. Susan St.
Suite 200
Santa Ana, CA. 92704
CA. License 734880
Tel 714-540-8863
Fax 714-556-8863

Bayley Construction
8005 S.E. 28th St.
P.O. Box 9004
Mercer Island, WA. 98040
WA. License
BAYLEC034JC
Tel 206-621-8884
Fax 206-343-7728

BAYLEY CONSTRUCTION

DLR Group
WWCOT
Architecture Engineering Planning Interiors

4280 Latham Street, Suite H
Riverside, California 92501
T 951.682.0470
F 951.682.1801

wwcot.com
dlrgroup.com

Santa Monica
Sacramento
Riverside
Palm Springs
Modesto
Shanghai, China

Copyright © 2010, DLR Group Inc. of California
DBA DLR Group WWCOT. All Rights Reserved

LICENSED ARCHITECT
JAMES MARIE SOUBIRAN
C 24807
9/19/2011
STATE OF CALIFORNIA

Public Agency Submittal:
Issued for Bidding:
Issued for Construction:

Revisions:

#		
1	9/19/2011	Bulletin 1

FOR CONSTRUCTION

Phase I FOX ENTERTAINMENT PLAZA

3605 Market Street
Riverside, CA 92501

City of Riverside

CITY OF RIVERSIDE

3900 Main Street , Riverside, CA 92522

Phase: CD
Revised 02.10.11
DLR Group Project No.75-10603-00

Building Sections

Issued Date: 02.10.11
Drawn By: Author
Checked By: Checker

A-A306
Sheet №

File Path & Name: C:\Users\cbohigian\Desktop\75-10603-00 Riv Parking Garage 7_Phase 1 local bohigian.rvt
© WWCOT 2009 – Plotted 9/16/2011 4:43:04 PM

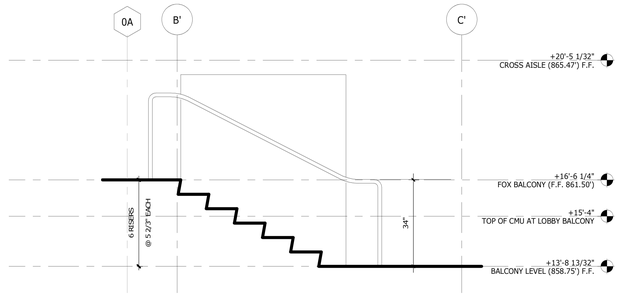

Access Stair West — Scale 1/2" = 1'-0" — 18

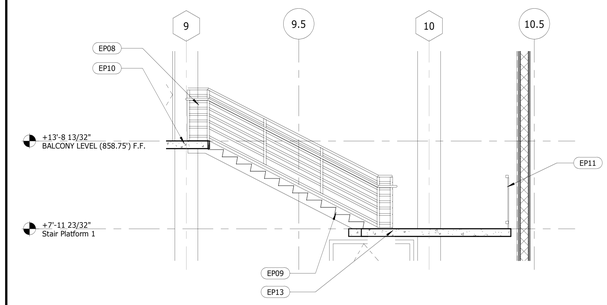

3rd Floor Lobby Section, Existing To Be Adjusted — Scale 1/4" = 1'-0" — 8

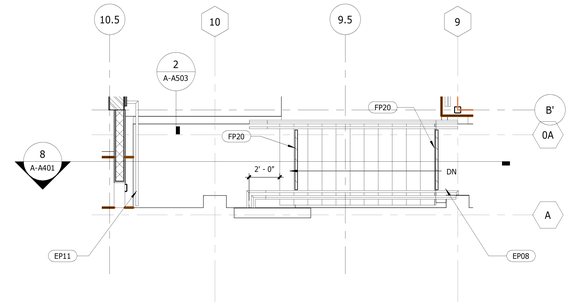

Stair - Balcony Landing to Cross-Aisle Lobby, New — Scale 1/4" = 1'-0" — 4

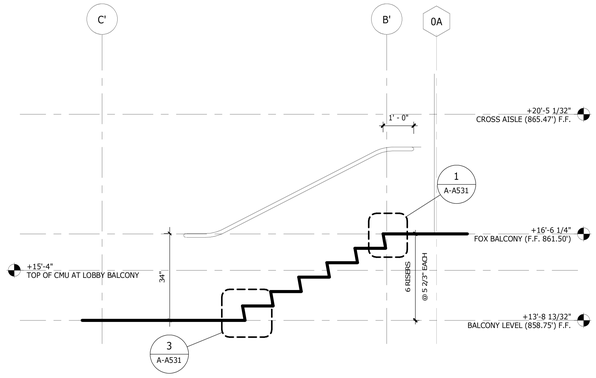

Access Stair East — Scale 1/2" = 1'-0" — 15

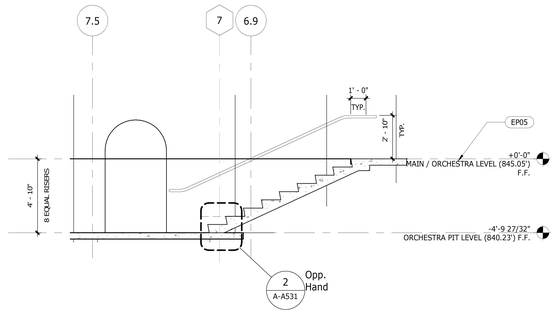

Main Lobby Stair Section (New) — Scale 1/4" = 1'-0" — 7

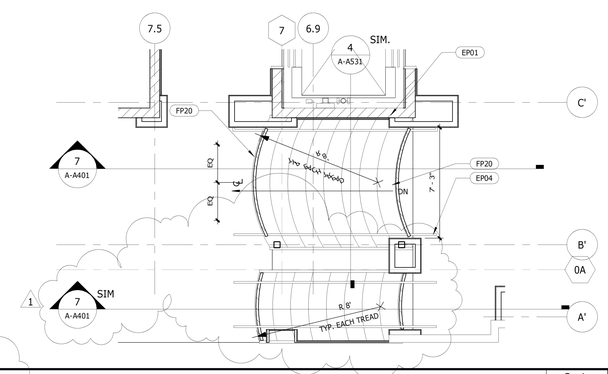

Stair - Main Lobby to Lower Lobby (New) — Scale 1/4" = 1'-0" — 3

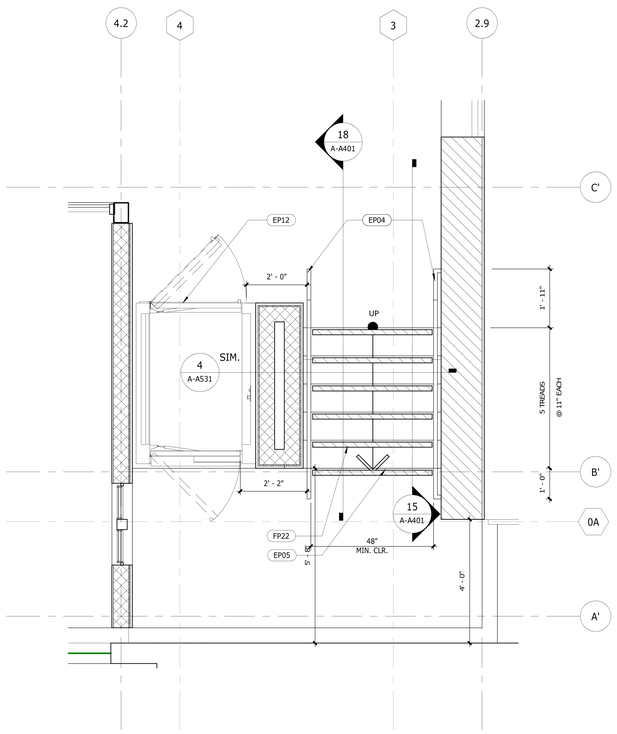

Balcony Access Stair at Lift — Scale 1/2" = 1'-0" — 13

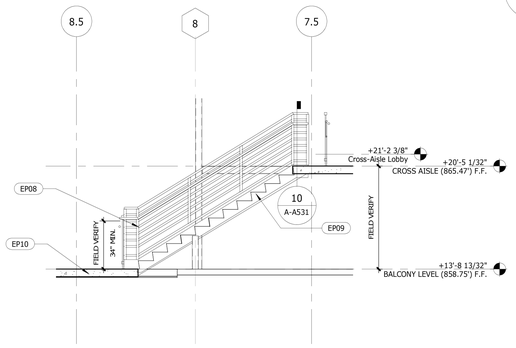

Main Lobby Landing Stair Section, Existing To Be Adjusted — Scale 1/4" = 1'-0" — 6

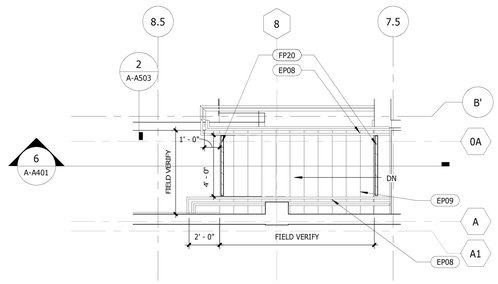

Stair - Main/Orchestra Landing to Balcony Landing, Existing To Be Adjusted — Scale 1/4" = 1'-0" — 2

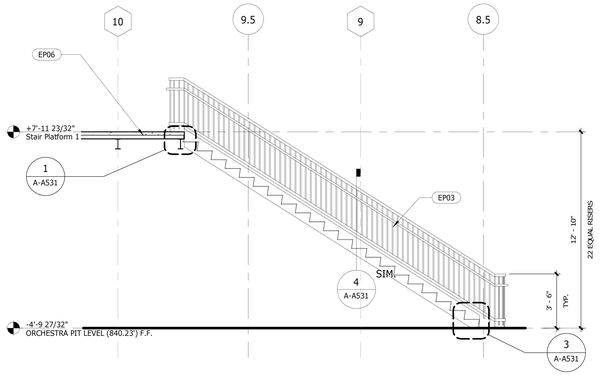

Lower Lobby Stair Section, New — Scale 1/4" = 1'-0" — 5

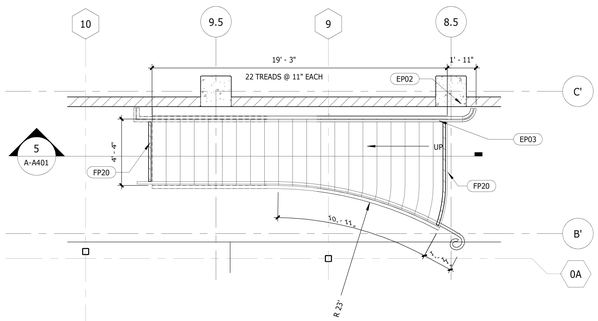

Stair - Lower Lobby to Main/Orchestra Landing (New) — Scale 1/4" = 1'-0" — 1

Bayley Construction
3730 S. Susan St.
Suite 200
Santa Ana, CA. 92704
CA. License 734880
Tel 714-540-8863
Fax 714-556-8863

Bayley Construction
8005 S.E. 28th St.
P.O. Box 9004
Mercer Island, WA. 98040
WA. License
BAYLECO034JC
Tel 206-621-8884
Fax 206-343-7728

BAYLEY CONSTRUCTION

DLR Group
WWCOT
Architecture Engineering Planning Interiors

4280 Latham Street, Suite H
Riverside, California 92501
T 951.682.0470
F 951.682.1801

wwcot.com
dlrgroup.com

Santa Monica
Sacramento
Riverside
Palm Springs
Modesto
Shanghai, China

Copyright © 2010, DLR Group Inc. of California
DBA DLR Group WWCOT. All Rights Reserved

LICENSED ARCHITECT
JAMES A. MARIE ROBINSON
C 24805
10/28/2011
STATE OF CALIFORNIA

Public Agency Submittal:
Issued for Bidding:
Issued for Construction:

Revisions:

#	Date	Description
1	9/19/2011	Bulletin 1

FOR CONSTRUCTION

Phase I
FOX
ENTERTAINMENT
PLAZA
3605 Market Street
Riverside, CA 92501

City of Riverside

CITY OF RIVERSIDE

3900 Main Street , Riverside, CA 92522

Phase: CD
Revised 02.10.11
DLR Group Project No.75-10603-00

Stair Plans and Sections

Issued Date: 02.10.11
Drawn By: Author
Checked By: Checker

A-A401
Sheet №

File Path & Name: C:\Users\cbohigian\Desktop\75-10603-00 Riv Parking Garage 7_Phase 1 local bohigian.rvt
© WWCOT 2009 – Plotted 9/16/2011 4:43:11 PM

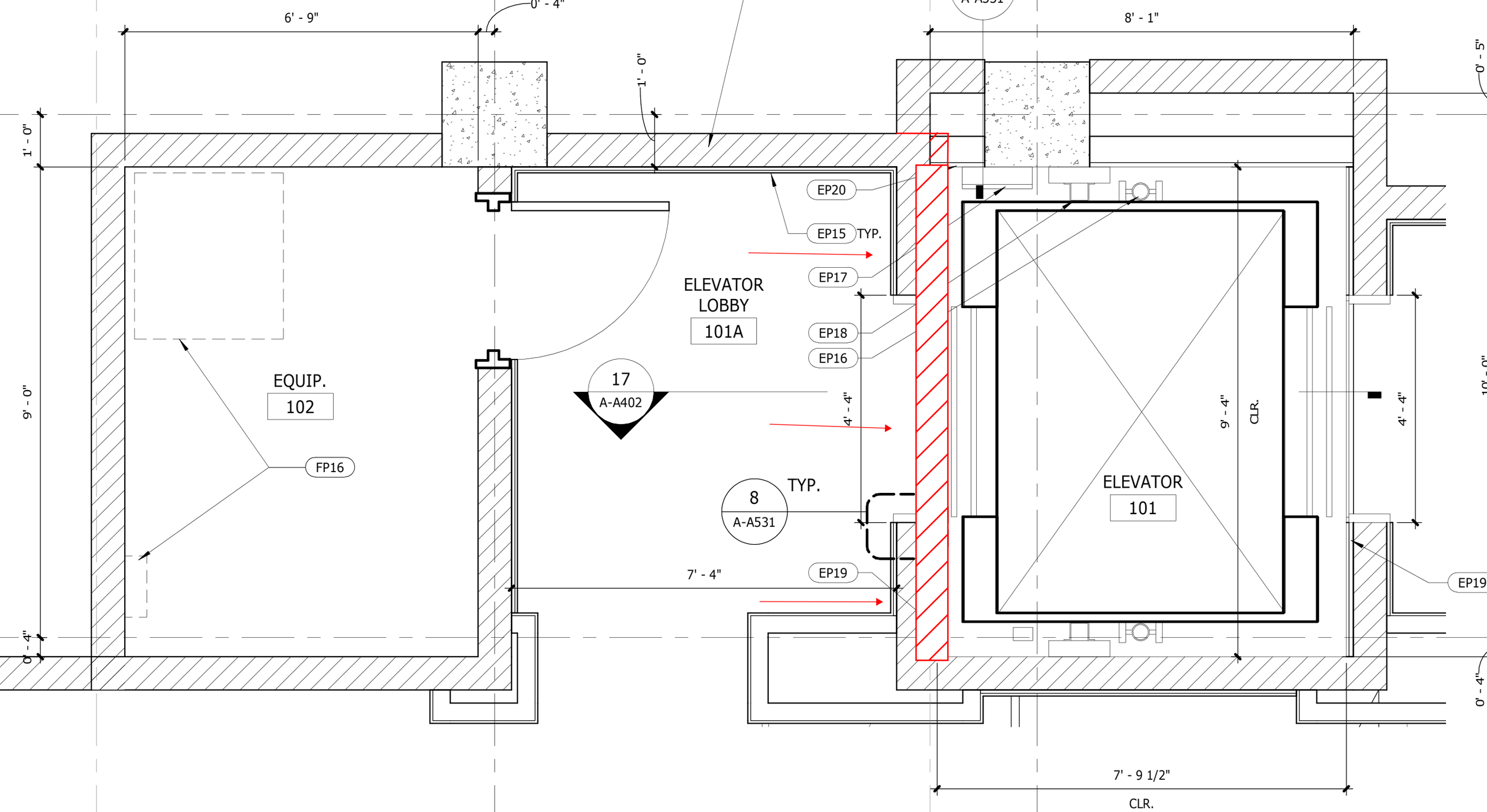
6' - 9"
0' - 4"
1' - 0"
8' - 1"
0' - 5"
1' - 0"
9' - 0"
0' - 4"
EP20
EP15 TYP.
EP17
EP18
EP16
ELEVATOR
LOBBY
101A
EQUIP.
102
FP16
17
A-A402
4' - 4"
9' - 4"
CLR.
4' - 4"
ELEVATOR
101
TYP.
8
A-A531
7' - 4"
EP19
EP19
7' - 9 1/2"
CLR.
10' - 0"
0' - 4"

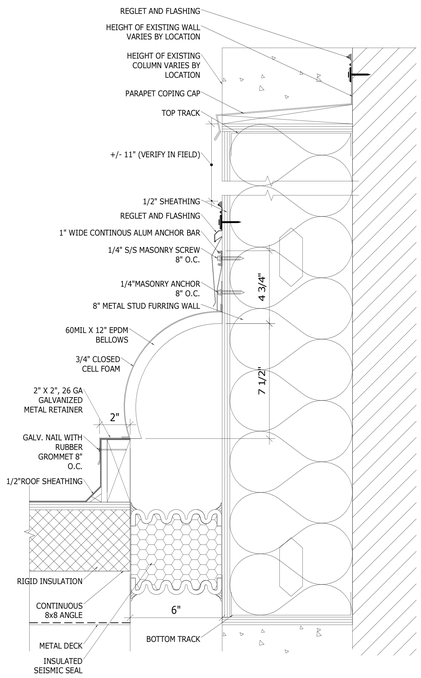

SEISMIC SEPARATION AT BUILT-UP ROOF | Scale 3" = 1'-0" | 19

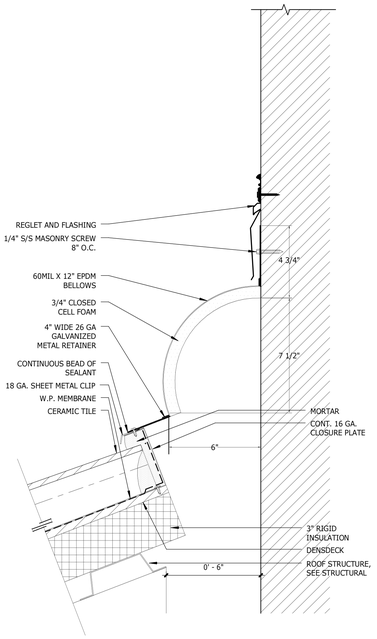

SEISMIC SEPARATION AT TILE ROOF | Scale 3" = 1'-0" | 15

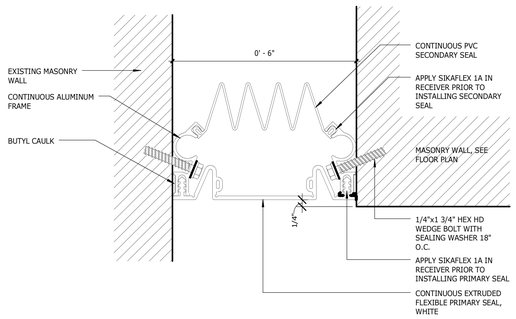

SEISMIC JNT - SF 600 | Scale 6" = 1'-0" | 14

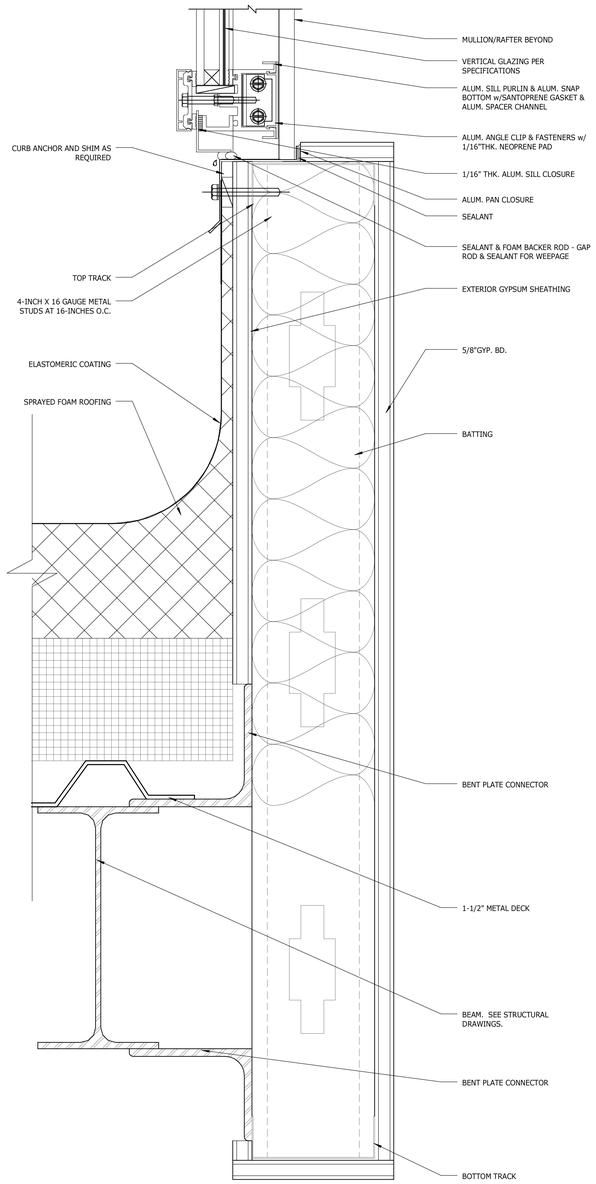

Skylite Section - Curb at Face | Scale 6" = 1'-0" | 6

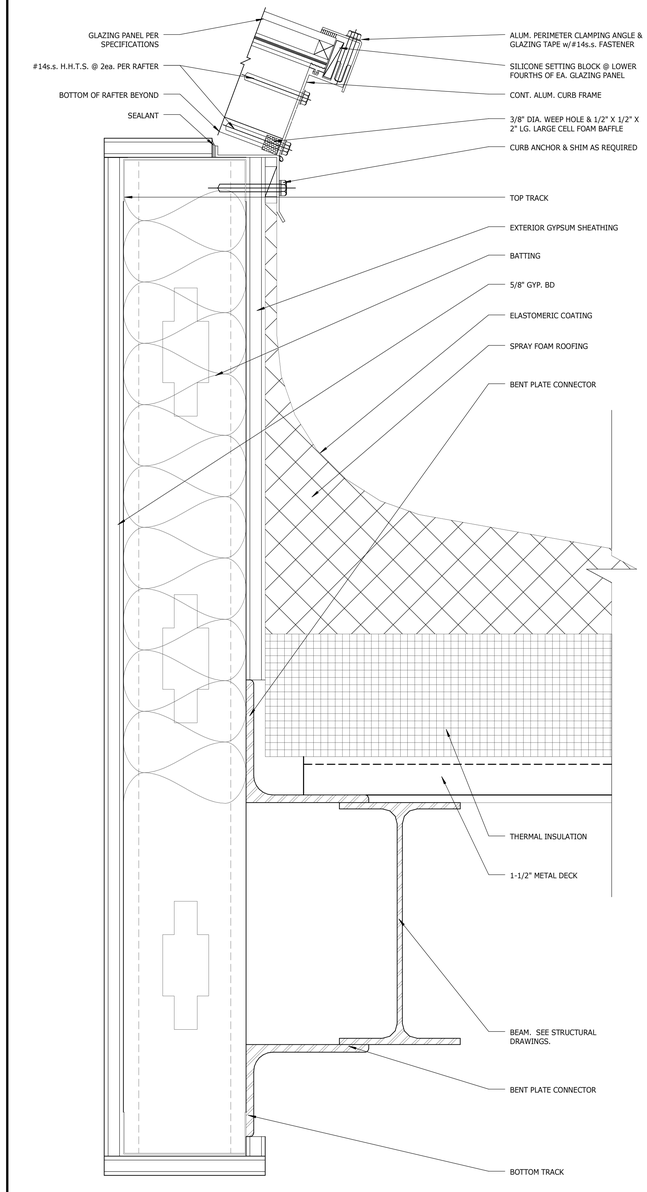

Skylite Section - Curb | Scale 6" = 1'-0" | 2

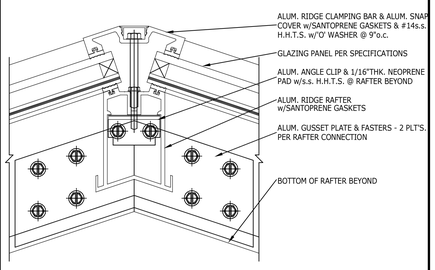

Skylite Section - Ridge | Scale 6" = 1'-0" | 17

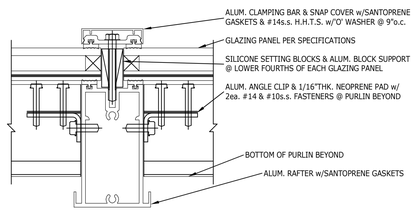

Skylite Section - Vertical Frame | Scale 6" = 1'-0" | 13

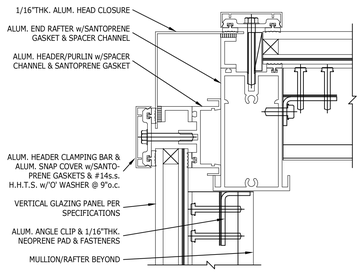

Skylite Section - Frame at Edge | Scale 6" = 1'-0" | 9

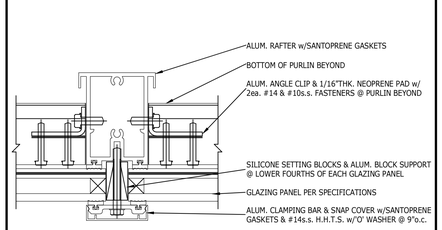

Skylite section - Vertical Frame at Face | Scale 6" = 1'-0" | 5

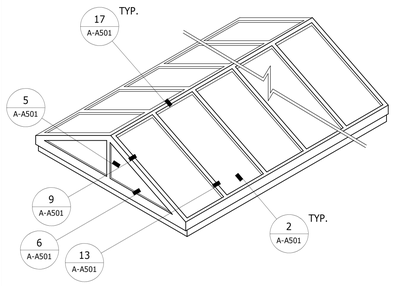

Skylite Isometric | 1

Bayley Construction
3730 S. Susan St.
Suite 200
Santa Ana, CA. 92704
CA. License 734880
Tel 714-540-8863
Fax 714-556-8863

Bayley Construction
8005 S.E. 28th St.
P.O. Box 9004
Mercer Island, WA. 98040
WA. License
BAYLECO34JC
Tel 206-621-8884
Fax 206-343-7728

BAYLEY CONSTRUCTION

DLR Group WWCOT
Architecture Engineering Planning Interiors

4280 Latham Street, Suite H
Riverside, California 92501
T 951.682.0470
F 951.682.1801

wwcot.com
dlrgroup.com

Santa Monica
Sacramento
Riverside
Palm Springs
Modesto
Shanghai, China

Copyright © 2010, DLR Group Inc. of California
DBA DLR Group WWCOT. All Rights Reserved

LICENSED ARCHITECT
JAMES MARIE HOLBROOK
C 24807
12/31/2011
STATE OF CALIFORNIA

Public Agency Submittal:
Issued for Bidding:
Issued for Construction:

Revisions:

FOR CONSTRUCTION

Phase I
FOX ENTERTAINMENT PLAZA
3605 Market Street
Riverside, CA 92501

City of Riverside

CITY OF RIVERSIDE

3900 Main Street , Riverside, CA 92522

Phase: CD
Revised 02.10.11
DLR Group Project No.75-10603-00

Exterior Details

Issued Date: 02.10.11
Drawn By: Author
Checked By: Checker

A-A501
Sheet №

File Path & Name: C:\Users\cbohigian\Desktop\75-10603-00 Riv Parking Garage 7_Phase 1 local bohigian.rvt
© WWCOT 2009 -- Plotted 9/16/2011 4:43:20 PM

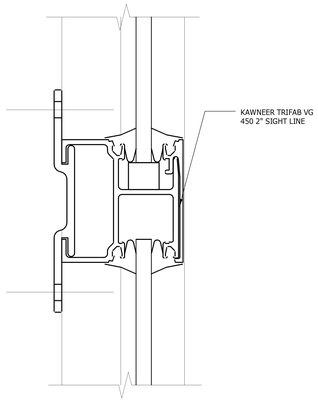

Intermediate Mullion — Scale 12" = 1'-0" — 20

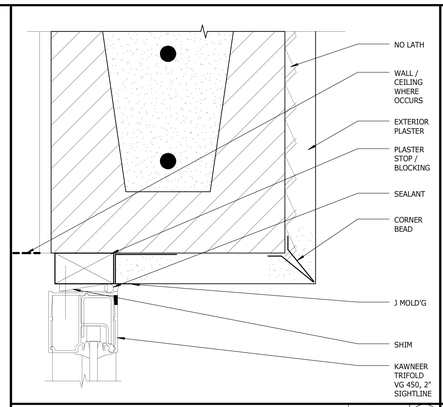

Storefront Head at Wall — Scale 6" = 1'-0" — 16

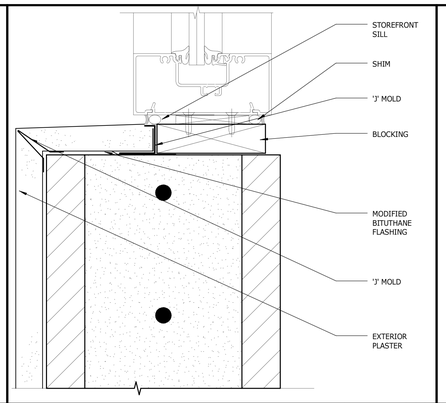

Storefront Sill at Wall — Scale 6" = 1'-0" — 12

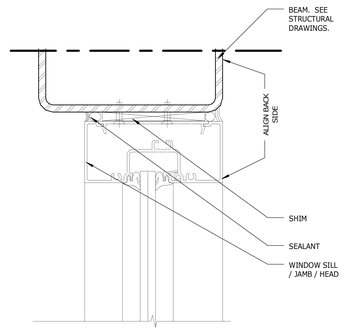

Transom Jamb / Head (Opp. from Door) — Scale 6" = 1'-0" — 8

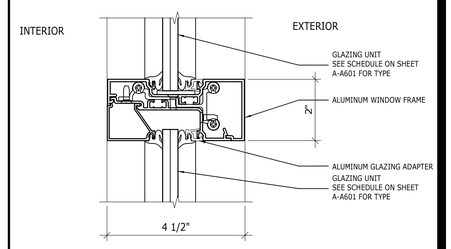

Storefront Horizontal Mullion — Scale 6" = 1'-0" — 4

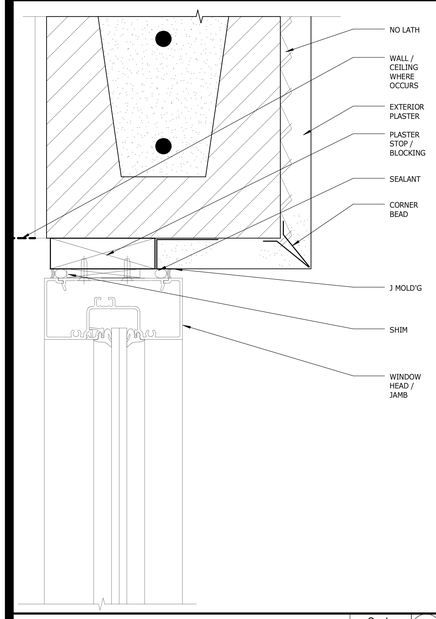

Storefront Head at Wall, Typ. — Scale 6" = 1'-0" — 18

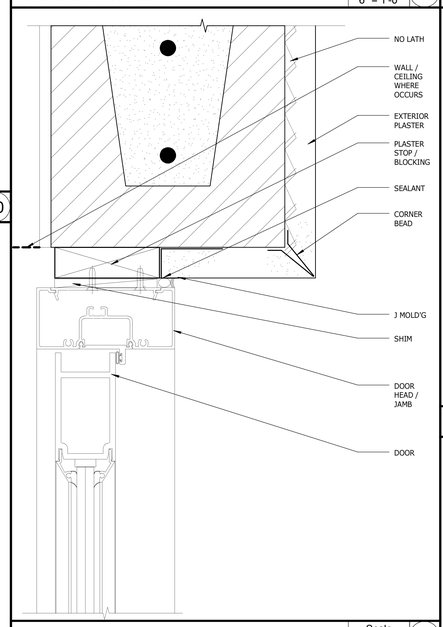

Storefront Door Head at Wall — Scale 6" = 1'-0" — 14

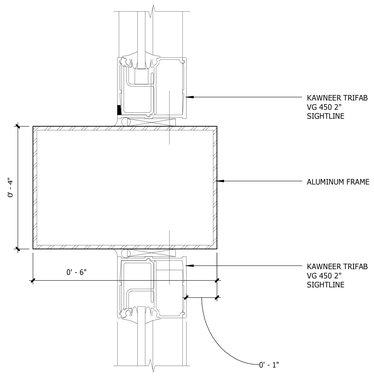

Storefront Transom / Jamb — Scale 6" = 1'-0" — 11

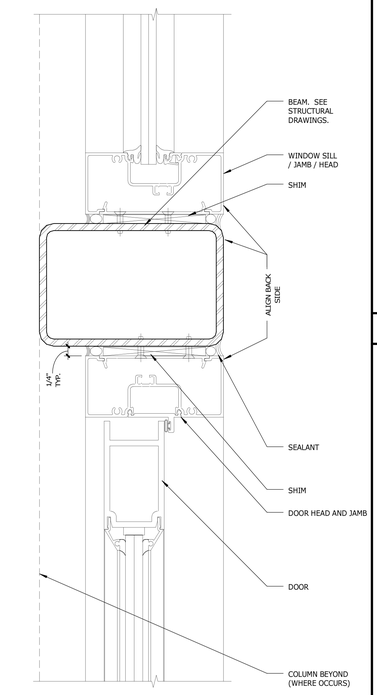

Storefront Transom Jamb / Head — Scale 6" = 1'-0" — 6

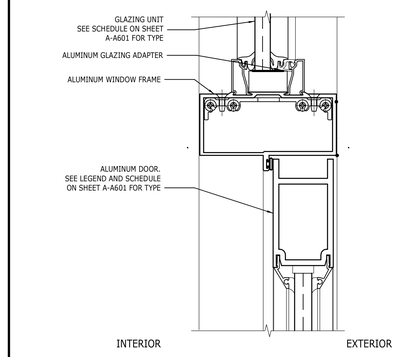

Storefront Door Head — Scale 6" = 1'-0" — 3

Window Sill - 2" Sightline — Scale 6" = 1'-0" — 17

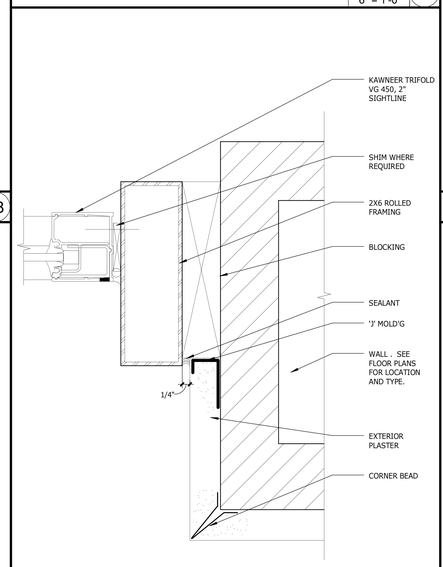

Head and Jamb at Wall — Scale 6" = 1'-0" — 13

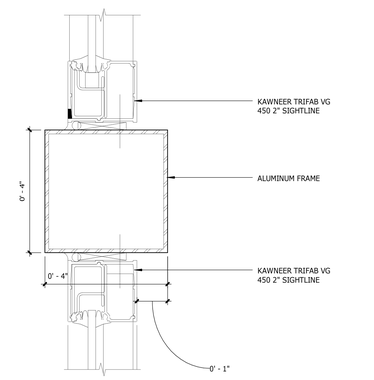

Storefront Transom / Jamb - 4x4 Center — Scale 6" = 1'-0" — 10

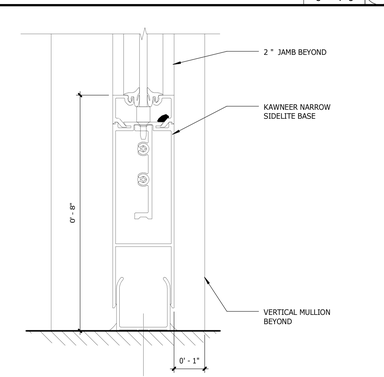

Sidelite Base — Scale 6" = 1'-0" — 9

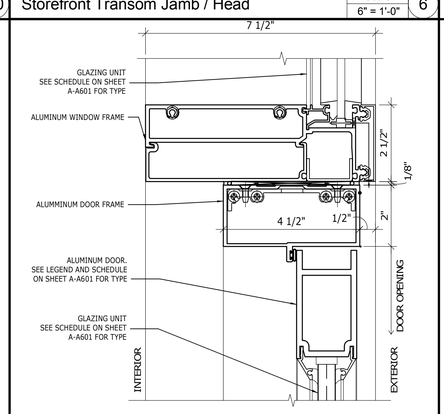

Curtainwall Door Head — Scale 6" = 1'-0" — 5

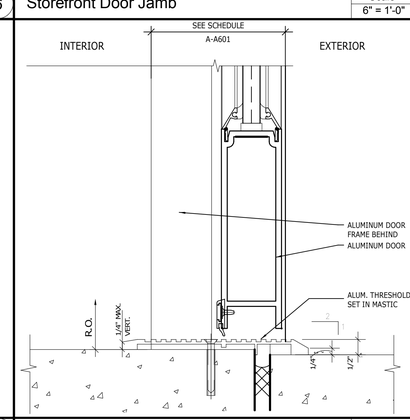

Storefront Door Threshold — Scale 6" = 1'-0" — 1

File Path & Name: C:\Users\cbohigian\Desktop\75-10603-00 Riv Parking Garage 7_Phase 1 local bohigian.rvt

© WWCOT 2009 – Plotted 9/16/2011 4:43:26 PM

Bayley Construction
3730 S. Susan St.
Suite 200
Santa Ana, CA. 92704
CA. License 734880
Tel 714-540-8863
Fax 714-556-8863

Bayley Construction
8005 S.E. 28th St.
P.O. Box 9004
Mercer Island, WA. 98040
WA. License
BAYLEC034JC
Tel 206-621-8884
Fax 206-343-7728

BAYLEY CONSTRUCTION

DLR Group WWCOT
Architecture Engineering Planning Interiors

4280 Latham Street, Suite H
Riverside, California 92501
T 951.682.0470
F 951.682.1801

wwcot.com
dlrgroup.com

Santa Monica
Sacramento
Riverside
Palm Springs
Modesto
Shanghai, China

Copyright © 2010, DLR Group Inc. of California
DBA DLR Group WWCOT. All Rights Reserved

LICENSED ARCHITECT — JAMES A. MARIE HOLBROOK — C 24803 — 9/18/2011 — STATE OF CALIFORNIA

Public Agency Submittal:
Issued for Bidding:
Issued for Construction:

Revisions:

FOR CONSTRUCTION

Phase I
FOX ENTERTAINMENT PLAZA
3605 Market Street
Riverside, CA 92501

City of Riverside

CITY OF RIVERSIDE

3900 Main Street , Riverside, CA 92522

Phase: CD
Revised 02.10.11
DLR Group Project No.75-10603-00

Door / Curtain Wall Details

Issued Date: 02.10.11
Drawn By: Author
Checked By: Checker

A-A502

Sheet №

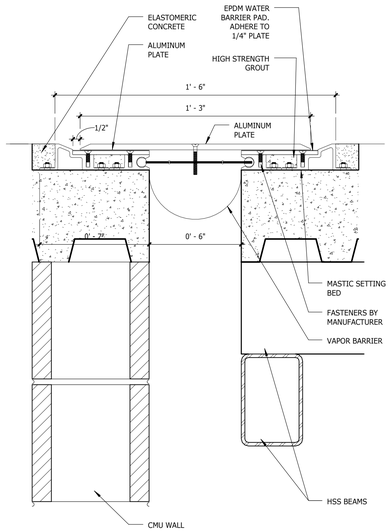

Exterior Seismic Joint | Scale 3" = 1'-0" | 10

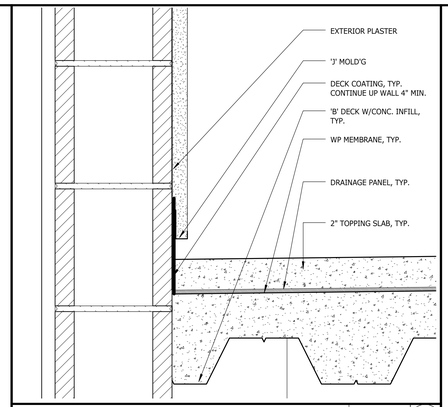

EXTERIOR DECK AT CMU WALL | Scale 3" = 1'-0" | 8

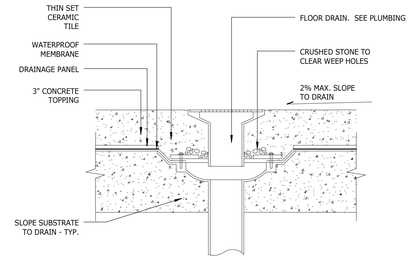

FLOOR DRAIN AT EXTERIOR DECK | Scale 3" = 1'-0" | 7

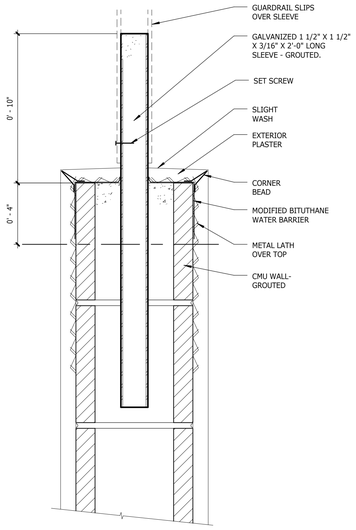

Typ. Wall Cap with Sleeve | Scale 3" = 1'-0" | 3

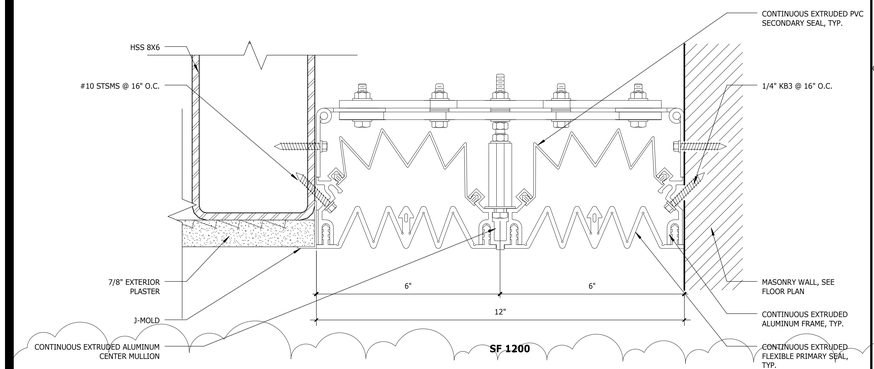

SEISMIC JNT - SF 1200 | Scale 6" = 1'-0" | 14

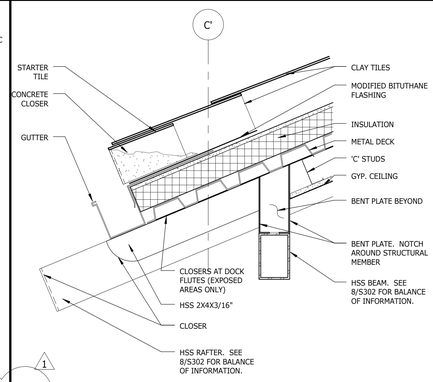

Roof Eave | Scale 1 1/2" = 1'-0" | 9

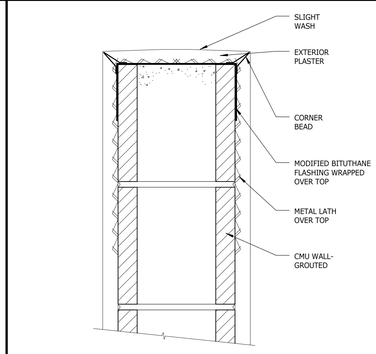

Typ. Wall Cap | Scale 3" = 1'-0" | 6

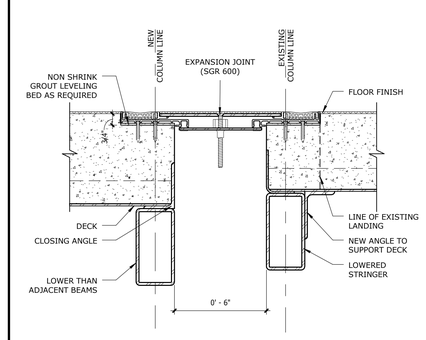

Seismic Joint - SGR 600 @(Ex) Stair | Scale 3" = 1'-0" | 2

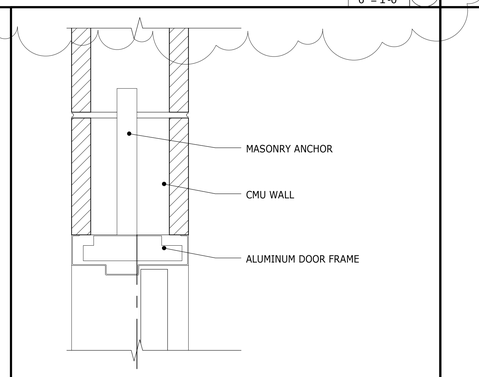

Exterior Head / Jamb at CMU Wall | Scale 3" = 1'-0" | 13

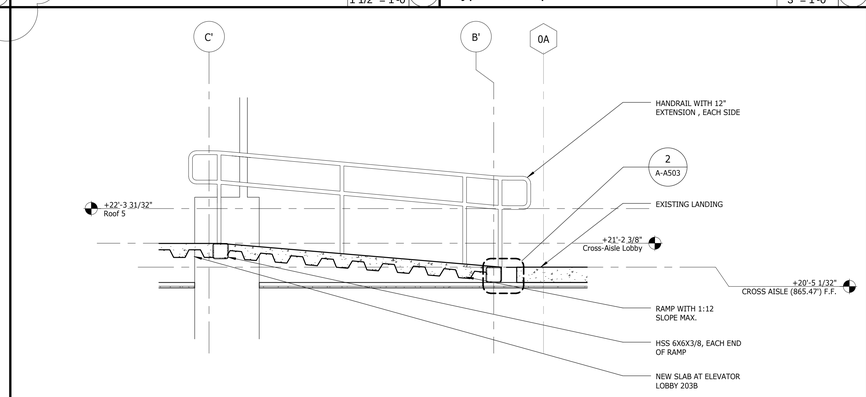

Ramp at Cross-Aisle Level | Scale 1/2" = 1'-0" | 5

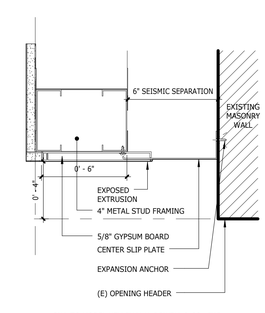

SIM. TO MODEL KFM BY M.H. POWELL & CO., INC.

SEISMIC JNT @ INTERIOR GYP. BD. | Scale 3" = 1'-0" | 1

Bayley Construction
3730 S. Susan St.
Suite 200
Santa Ana, CA. 92704
CA. License 734880
Tel 714-540-8863
Fax 714-556-8863

Bayley Construction
8005 S.E. 28th St.
P.O. Box 9004
Mercer Island, WA. 98040
WA. License
BAYLEC034JC
Tel 206-621-8884
Fax 206-343-7728

BAYLEY CONSTRUCTION

DLR Group WWCOT
Architecture Engineering Planning Interiors

4280 Latham Street, Suite H
Riverside, California 92501
T 951.682.0470
F 951.682.1801

wwcot.com
dlrgroup.com

Santa Monica
Sacramento
Riverside
Palm Springs
Modesto
Shanghai, China

Copyright © 2010, DLR Group Inc. of California
DBA DLR Group WWCOT. All Rights Reserved

LICENSED ARCHITECT
SANDRA MARIE YOUNGKNER
C-24903
12/31/2011
STATE OF CALIFORNIA

Public Agency Submittal:
Issued for Bidding:
Issued for Construction:

Revisions:

#		
1	9/19/2011	Bulletin 1

FOR CONSTRUCTION

Phase I
FOX ENTERTAINMENT PLAZA
3605 Market Street
Riverside, CA 92501

City of Riverside

CITY OF RIVERSIDE

3900 Main Street , Riverside, CA 92522

Phase: CD
Revised 02.10.11
DLR Group Project No.75-10603-00

Details

Issued Date: 02.10.11
Drawn By: Author
Checked By: Checker

A-A503
Sheet №

File Path & Name: C:\Users\aemami\Documents\75-10603-00 Riv Parking Garage 7_Phase 1_armine.rvt
© WWCOT 2009 – Plotted 9/19/2011 11:07:04 AM

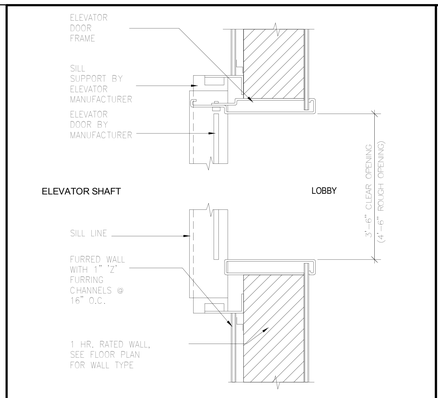

Door Frame at Elevator Jamb — Scale 1 1/2" = 1'-0" — 8

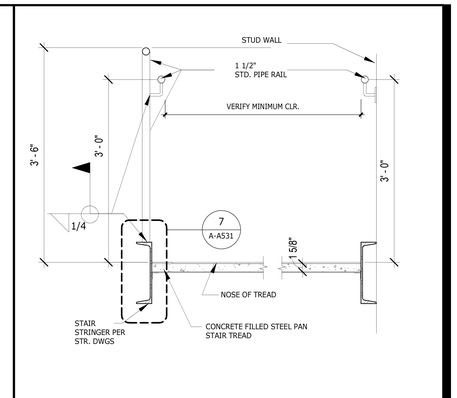

Railing/Steel Pan at New Stair Section — Scale 1" = 1'-0" — 4

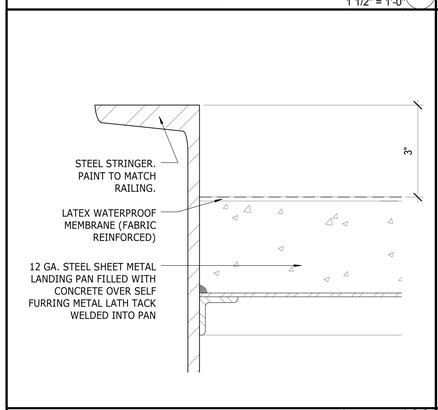

Steel Pan Stair Section at Stringer — Scale 6" = 1'-0" — 7

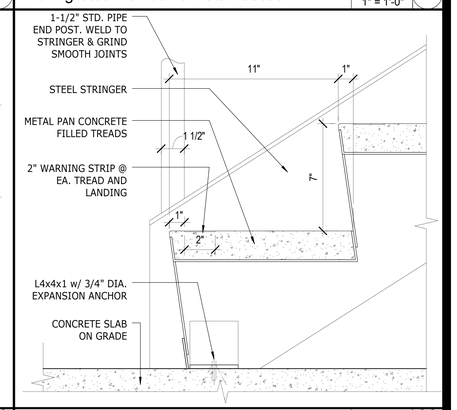

Steel Pan Stair at Base — Scale 3" = 1'-0" — 3

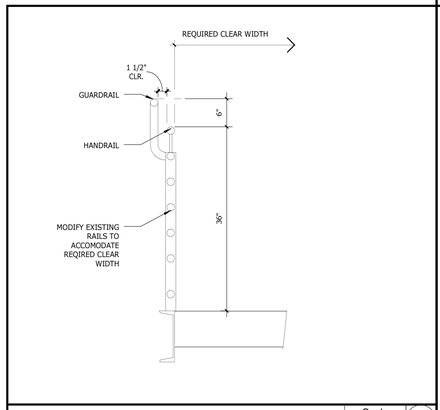

Existing Railing to Be Modified — Scale 1" = 1'-0" — 10

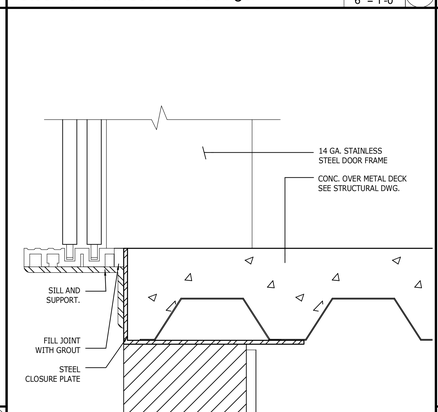

Sill at Elevator Door — Scale 3" = 1'-0" — 5

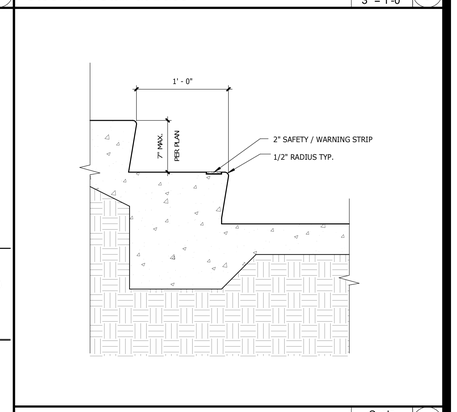

Stair - Concrete — Scale 1 1/2" = 1'-0" — 2

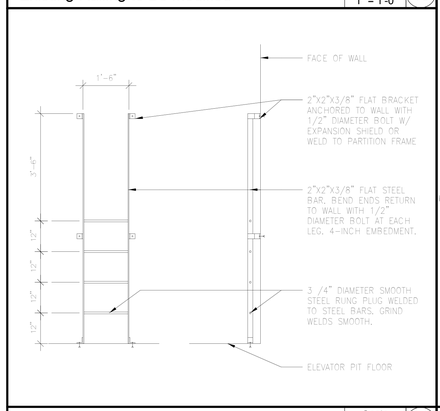

Pit Ladder — Scale 1/2" = 1'-0" — 9

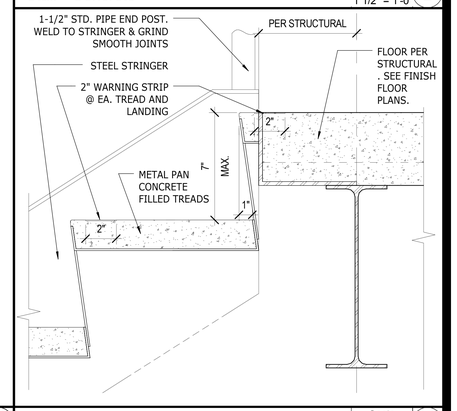

Stair at Floor — Scale 3" = 1'-0" — 1

Bayley Construction
3730 S. Susan St.
Suite 200
Santa Ana, CA. 92704
CA. License 734880
Tel 714-540-8863
Fax 714-556-8863

Bayley Construction
8005 S.E. 28th St.
P.O. Box 9004
Mercer Island, WA. 98040
WA. License
BAYLECO034JC
Tel 206-621-8884
Fax 206-343-7728

BAYLEY CONSTRUCTION

DLR Group WWCOT
Architecture Engineering Planning Interiors

4280 Latham Street, Suite H
Riverside, California 92501
T 951.682.0470
F 951.682.1801

wwcot.com
dlrgroup.com

Santa Monica
Sacramento
Riverside
Palm Springs
Modesto
Shanghai, China

Copyright © 2010, DLR Group Inc. of California
DBA DLR Group WWCOT. All Rights Reserved

LICENSED ARCHITECT — JAMES MARIE SOUBIRAN — C 24803 — 12/31/2011 — STATE OF CALIFORNIA

Public Agency Submittal:
Issued for Bidding:
Issued for Construction:

Revisions:

FOR CONSTRUCTION

Phase I
FOX ENTERTAINMENT PLAZA
3605 Market Street
Riverside, CA 92501

City of Riverside

CITY OF RIVERSIDE

3900 Main Street , Riverside, CA 92522

Phase: CD
Revised 02.10.11
DLR Group Project No.75-10603-00

Stair and Elevator Details

Issued Date: 02.10.11
Drawn By: Author
Checked By: Checker

A-A531
Sheet №

File Path & Name: C:\Users\cbohigian\Desktop\75-10603-00 Riv Parking Garage 7_Phase 1 local bohigian.rvt
© WWCOT 2009 – Plotted 9/16/2011 4:43:35 PM

Window Schedule

Type	Window Size: Width	Window Size: Height	Frame: Thickness	Frame: Material	Frame: Finish	Glazing	Details: Window_Head Detail	Details: Window_Jamb Detail	Details: Window_Sill Detail	Details: Window_Other Detail	Remarks
											1
B	See Legend	See Legend	4"	AL	Kynar (Brown)	TR	See Legend	See Legend	See Legend	See Legend	
C	See Legend	See Legend	4"	AL	Kynar (Brown)	TR	See Legend	See Legend	See Legend	See Legend	
D	See Legend	See Legend	See Legend	AL	Kynar (Brown)	TR	See Legend	See Legend	See Legend	See Legend	
E											
F	See Legend	See Legend	See Legend	AL	Kynar (Brown)	TR	See Legend	See Legend	See Legend	See Legend	

Door Schedule

Door No.	Width	Height	Thickness	Door Type	Door: Material	Door: Finish	Glazing Material	Frame: Material	Frame: Finish	Details: Head	Details: Jamb	Panic Hardware	Hardware Group	Assembly Fire Rating (minutes)	Remarks
100A-1	7' - 0"	8' - 0"	0' - 2"	B	AL	Kynar (Brown)	TR	AL	Kynar (Brown)	3/A-A502	18/A-A502		01	Non-Rated	Hardware finish to be oil-rubbed bronze
100A-2	7' - 0"	8' - 0"	0' - 2"	B	AL	Kynar (Brown)	TR	AL	Kynar (Brown)	3/A-A502	18/A-A502		01	Non-Rated	Hardware finish to be oil-rubbed bronze
100A-3	7' - 0"	8' - 0"	0' - 2"	B	AL	Kynar (Brown)	TR	AL	Kynar (Brown)	3/A-A502	18/A-A502		01	Non-Rated	Hardware finish to be oil-rubbed bronze
100B-1	5' - 0"	7' - 0"	0' - 2"	D									02, 07		Match Existing 1
102	3' - 0"	7' - 0"	0' - 2"	C	AL	Kynar (Brown)		HM	PAINT				06	Non-Rated	Hardware finish to be oil-rubbed bronze
200-1	4' - 0"	6' - 8"	0' - 2"	A	WD	Paint	TR	HM	PAINT	13/A-A503	13/A-A503		03	Non-Rated	Hardware finish to be oil-rubbed bronze
201-1	6' - 3 3/4"	7' - 0"	0' - 2"	B	AL	Kynar (Brown)	TR	AL	Kynar (Brown)	6/A-A502	6/A-A502		04	Non-Rated	Hardware finish to be oil-rubbed bronze
201-2	6' - 3 3/4"	7' - 0"	0' - 2"	B	AL	Kynar (Brown)	TR	AL	Kynar (Brown)	6/A-A502	6/A-A502		04	Non-Rated	Hardware finish to be oil-rubbed bronze
301-1	6' - 0"	7' - 0 3/4"	0' - 2"	B	AL	Kynar (Brown)	TR	AL	Kynar (Brown)	2/A-A502	2/A-A502		05	Non-Rated	Hardware finish to be oil-rubbed bronze

KEY

AL ALUMINUM
TR TEMPERED
HM HOLLOW METAL
WD WOOD

Door and Window Schedules 4

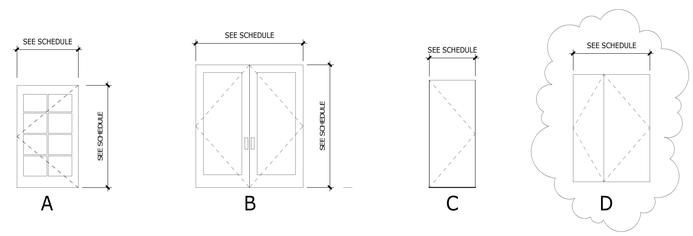

Door legend Scale 1/4"=1'-0" 3

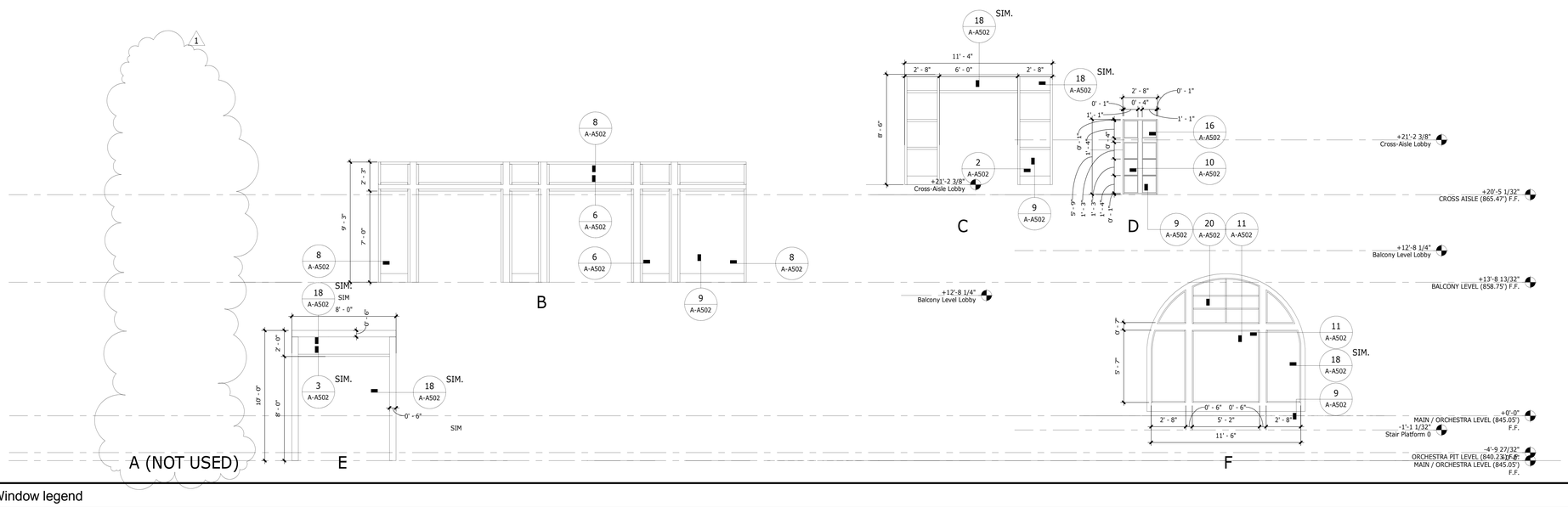

Window legend Scale 1/4"=1'-0" 1

File Path & Name: C:\Users\cbohigian\Desktop\75-10603-00 Riv Parking Garage 7_Phase 1 local bohigian.rvt
© WWCOT 2009 -- Plotted 9/16/2011 4:43:39 PM

BAYLEY CONSTRUCTION

Bayley Construction
3730 S. Susan St.
Suite 200
Santa Ana, CA. 92704
CA. License 734880
Tel 714-540-8863
Fax 714-556-8863

Bayley Construction
8005 S.E. 28th St.
P.O. Box 9004
Mercer Island, WA. 98040
WA. License
BAYLECO034JC
Tel 206-621-8884
Fax 206-343-7728

DLR Group WWCOT
Architecture Engineering Planning Interiors

4280 Latham Street, Suite H
Riverside, California 92501
T 951.682.0470
F 951.682.1801

wwcot.com
dlrgroup.com

Santa Monica
Sacramento
Riverside
Palm Springs
Modesto
Shanghai, China

Copyright © 2010, DLR Group Inc. of California
DBA DLR Group WWCOT. All Rights Reserved

LICENSED ARCHITECT
JAMES MARIE HOLBROOK
C 24403
9/19/2011
STATE OF CALIFORNIA

Public Agency Submittal:
Issued for Bidding:
Issued for Construction:

Revisions:

1 9/19/2011 Bulletin 1

FOR CONSTRUCTION

Phase I
FOX
ENTERTAINMENT
PLAZA
3605 Market Street
Riverside, CA 92501

City of Riverside

CITY OF RIVERSIDE

3900 Main Street , Riverside, CA 92522

Phase: CD
Revised 02.10.11
DLR Group Project No.75-10603-00

Door and Window
Schedules and Legends

Issued Date: 02.10.11
Drawn By: Author
Checked By: Checker

A-A601
Sheet №

City of Riverside

PHASE 1 : FOX LOBBY EXPANSION

3605 MARKET STREET RIVERSIDE, CA 92501

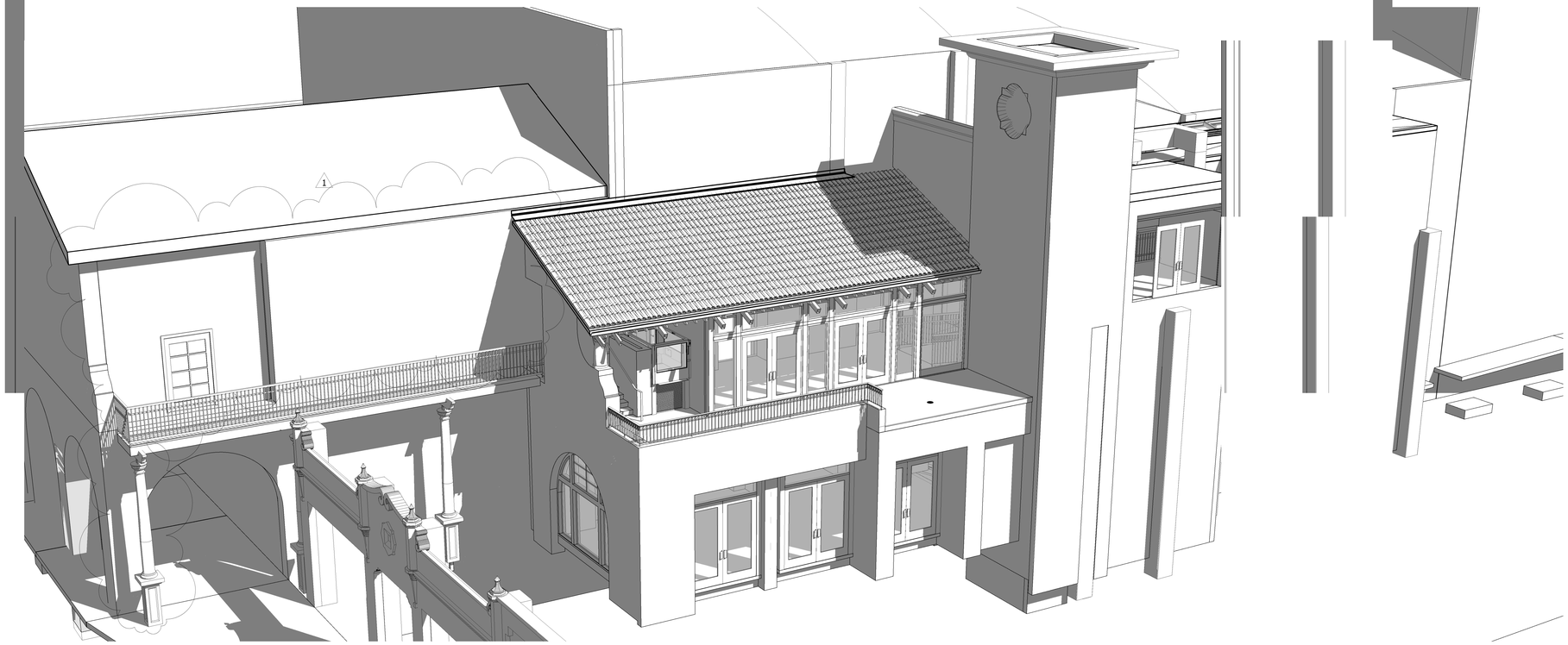

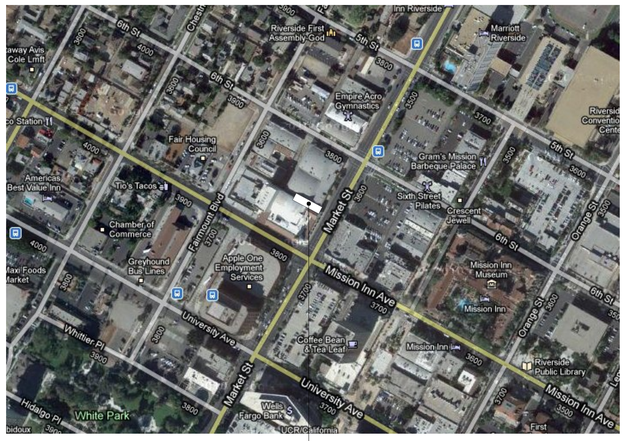

PROJECT LOCATION

Vicinity Map 13

OWNER

CITY OF RIVERSIDE
3900 MAIN STREET
RIVERSIDE, CALIFORNIA 92522

CONTACT: ROBERT WISE
T (951) 826-2429
F (951) 826-5744

GENERAL CONTRACTOR

BAYLEY CONSTRUCTION
3730 S. SUSAN STREET, SUITE 200
SANTA ANA, CALIFORNIA 92704

CONTACT: JOHN SPATH
T (714) 540-8863
F (714) 448-8364

ARCHITECT

DLR GROUP WWCOT
4280 LATHAM STREET, SUITE H
RIVERSIDE, CALIFORNIA 92501

CONTACT: MARK SCHOEMAN
T (951) 682-0470
F (951) 682-1801

CIVIL

RICK ENGINEERING
1223 UNIVERSITY AVENUE
RIVERSIDE, CALIFORNIA 92501

CONTACT: MARTEN ANDERSON
T (951) 782-0707
F (951) 782-0723

STRUCTURAL ENGINEER

THE NAKAKI BASHAW GROUP, INC.
6 VENTURE, SUITE275
IRVINE, CALIFORNIA 92618

CONTACT: SUZANNE DOW NAKAKI
T (949) 341-0066
F (949) 341-0099

MEP ENGINEER

GLUMAC ENGINEERS
18200 VON KARMAN AVE., SUITE 100
IRVINE, CALIFORNIA 92612

CONTACT: SHEAU-CHYNG WONG
T (949) 833-8190
F (949) 833-0252

Project Directory 9

APPLICABLE STATE CODE:
LIST OF CALIFORNIA CODE OF REGULATIONS (C.C.R.) GOVERNING THIS PROJECT:

2010	CALIFORNIA ADMINISTRATIVE CODE, PART 1,TITLE 24 C.C.R.		
2010	CALIFORNIA BUILDING CODE (CBC), (WHICH ADOPTS THE 2009 IBC)	PART 2,	TITLE 24 C.C.R.
2010	CALIFORNIA ELECTRICAL CODE (CEC), (WHICH ADOPTS THE 2008 NEC)	PART 3,	TITLE 24 C.C.R.
2010	CALIFORNIA MECHANICAL CODE (CMC) (WHICH ADOPTS THE 2009 UMC)	PART 4,	TITLE 24 C.C.R.
2010	CALIFORNIA PLUMBING CODE (CPC), (WHICH ADOPTS THE 2009 UPC)	PART 5,	TITLE 24 C.C.R.
2007	CALIFORNIA ENERGY CODE, (WHICH ADOPTS THE 2008 ENERGY EFFICIENCY STANDARDS)	PART 6,	TITLE 24, C.C.R.
2010	CALIFORNIA FIRE CODE, (WHICH ADOPTS THE 2009 IFC)	PART 9,	TITLE 24, C.C.R.
2010	CALIFORNIA REFERENCED STANDARDS,	PART 12,	TITLE 24, C.C.R.
1990	TITLE 19 C.C.R., PUBLIC SAFETY,	STATE FIRE MARSHAL REGULATIONS	

PARTIAL LIST OF APPLICABLE STANDARDS

NFPA 13	INSTALLATION OF SPRINKLER SYSTEMS	2010 EDITION
NFPA14	INSTALLATION OF STANDPIPE AND HOSE SYSTEMS	2010 EDITION
NFPA 17	DRY CHEMICAL EXTINGUISHING SYSTEMS	2009 EDITION
NFPA 17A	WET CHEMICAL SYSTEMS	2009 EDITION
NFPA 20	STATIONARY PUMPS FOR FIRE PROTECTION	2010 EDITION
NFPA 24	PRIVATE FIRE SERVICE MAINS AND THEIR APPURT.	2010 EDITION
NFPA 72	NATIONAL FIRE ALARM AND SIGNALING CODE (CALIFORNIA AMENDED) (SEE UL STANDARD 1371 FOR "VISUAL DEVICES")	2010 EDITION
NFPA 253	CRITICAL RADIANT FLUX OF FLOOR COVERING SYSTEMS	2006 EDITION
NFPA 2001	CLEAN AGENT FIRE EXTINGUISHING SYSTEMS REFERENCE CODE SECTION FOR NFPA STANDARDS 2007 CBC (SFM) 3504.1	2008 EDITION

Applicable Codes and Standards 5

Utility Directory 2

The project is a new structure to be built in the first of two phases of construction. This structure will provide circulation and disabled access to the main building, as well as provide a connection between the main building and the structures to be built during phase two of construction. The program spaces include lobbies on each floor and a balcony. The building is proposed to be three stories and 4,383 GSF.

Scope of Work 1

Bayley Construction
3730 S. Susan St.
Suite 200
Santa Ana, CA. 92704
CA. License 734880
Tel 714-540-8863
Fax 714-556-8863

Bayley Construction
8005 S.E. 28th St.
P.O. Box 9004
Mercer Island, WA. 98040
WA. License
BAYLEC034JC
Tel 206-621-8884
Fax 206-343-7728

DLR Group WWCOT
Architecture Engineering Planning Interiors

4280 Latham Street, Suite H
Riverside, California 92501
T 951.682.0470
F 951.682.1801

wwcot.com
dlrgroup.com

Santa Monica
Sacramento
Riverside
Palm Springs
Modesto
Shanghai, China

Copyright © 2010, DLR Group Inc. of California
DBA DLR Group WWCOT. All Rights Reserved

LICENSED ARCHITECT
JAMES MARIE HOLZHUETER
C 24467
9/19/2011
STATE OF CALIFORNIA

Public Agency Submittal:
Issued for Bidding:
Issued for Construction:

Revisions:

1 9/19/2011 Bulletin 1

FOR CONSTRUCTION

Phase I
FOX
ENTERTAINMENT
PLAZA
3605 Market Street
Riverside, CA 92501

City of Riverside

3900 Main Street , Riverside, CA 92522

Phase: CD
Revised 02.10.11
DLR Group Project No.75-10603-00

COVER SHEET

Issued Date: 02.10.11
Drawn By: JP
Checked By: Checker

A-G000
Sheet №

File Path & Name: C:\Users\bobigian\Desktop\75-10603-00 Riv Parking Garage 7_Phase 1 local bobigian.rvt
© WWCOT 2009 -- Plotted 9/16/2011 4:47:09 PM

A

AAP	AREA ALARM PANEL
AB	ANCHOR BOLT
ABV	ABOVE
AC	ASPHALT CONCRETE
ACC	ACCESSIBILITY
ACOUS	ACOUSTICAL
ACT	ACOUSTICAL CEILING TILE
AD	AREA DRAIN
ADDL	ADDITIONAL
ADH	ADHESIVE
ADJ	ADJUSTABLE
AFF	ABOVE FINISH FLOOR
AFG	ABOVE FINISH GRADE
AFS	ABOVE FINISH SLAB
AGGR	AGGREGATE
AHR	ANCHOR
AL	ALUMINUM
ALT	ALTERNATE
ANOD	ANODIZED
AP	ACCESS PANEL
APPROX	APPROXIMATE(LY)
ARCH	ARCHITECT(URAL)
ASPH	ASPHALT
AUTO	AUTOMATIC

B

BB	BULLETIN BOARD
BD	BOARD
BET	BETWEEN
BG	BUMPER GUARD
BITUM	BITUMINOUS
BKG	BACKING
BLDG	BUILDING
BLK	BLOCK
BLKG	BLOCKING
BLW	BELOW
BM	BEAM
BOT	BOTTOM
BRKT	BRACKET
BSMT	BASEMENT
BURS	BUILT UP ROOFING SYSTEM

C

CAB	CABINET
CARP	CARPET
CB	CATCH BASIN
CCT	CUBICLE CURTAIN TRACK
CCTV	CLOSE CIRCUIT TELEVISION
CD	CORNER GUARD
CEM	CEMENT
CEM PLAS	CEMENT PLASTER
CER	CERAMIC
CER TILE	CERAMIC TILE
CFE	CONTRACTOR FURNISHED EQUIPMENT
CG	CORNER GUARD
CH BD	CHALKBOARD
CI	CAST IRON
CL	CENTER LINE
CLG	CEILING
CLJ	CONTROL JOINT
CLR	CLEAR
CMU	CONCRETE MASONRY UNIT
CNTR	COUNTER
CO	CASED OPENING
COL	COLUMN
CONC	CONCRETE
CONF	CONFERENCE
CONN	CONNECTION
CONSTR	CONSTRUCTION
CONT	CONTINUOUS
CORR	CORRIDOR
CSK	COUNTERSUNK
CSP	COMBINATION STANDPIPE
CSWK	CASEWORK
CT	CURTAIN TRACK
CUST	CUSTOM
CW	COLD WATER

D

DA	DISABLE ACCESSIBILITY
D-W	DISTILLED WATER
DI-W	DEIONIZED WATER
DBL	DOUBLE
DBL ACT	DOUBLE ACTING
DEMO	DEMOLISH
DET	DETAIL
DF	DRINKING FOUNTAIN
DIA	DIAMETER
DIAG	DIAGONAL
DIFF	DIFFUSER
DIM	DIMENSION
DIM PT	DIMENSION POINT
DISP	DISPENSER
DIST	DISTANCE
DLV	DOOR LOUVER
DMPF	DAMPPROOFING
DN	DOWN
DOP	DOOR OPENING
DR	DRAIN
DS	DOWNSPOUT
DSP	DRY STANDPIPE
DT	DRAIN TILE, DRAPERY TRACK
DWG	DRAWING
DWGS	DRAWINGS
DWR	DRAWER
DWTR	DUMBWAITER

E

(E)	EXISTING
E	EAST
EA	EACH
ECAB	ELECTRICAL CABINET
EDR	EQUIPMENT DRAIN
EF	EACH FACE
EG	EDGE GUARD
EIFS	EXTERIOR INSULATION FINISH SYSTEM
EL	ELEVATION
ELAST	ELASTOMERIC
ELEC	ELECTRICAL
ELEV	ELEVATOR
EMER	EMERGENCY
EMR SHR	EMERGENCY SHOWER
ENCL	ENCLOSURE
ENGR	ENGINEER
EO	ELECTRICAL OUTLET
EOS	EDGE OF SLAB
EP	ELECTRICAL PANEL
EPDM	ETHYLENE PROPYLENE DIENE MONOMER
EPRF	EXPLOSION PROOF
EQ	EQUAL
EQL SP	EQUALLY SPACED
EQUIP	EQUIPMENT
EQUIV	EQUIVALENT
ESCAL	ESCALATOR
EWC	ELECTRIC WATER COOLER
EXP	EXPANSION
EXP BT	EXPANSION BOLT
EXP JT	EXPANSION JOINT
EXPO	EXPOSED
EXST	EXISTING
EXST GR	EXISTING GRADE
EXT	EXTERIOR
EXTR	EXTRUSION

F

F/F	FACE TO FACE
FA	FIRE ALARM
FAWS	FLUID-APPLIED WATERPROOFING SYSTEM
FB	FLAT BAR
FBD	FIBERBOARD
FCU	FAN COIL UNIT
FD	FLOOR DRAIN
FDC	FIRE DEPARTMENT CONNECTION
FDN	FOUNDATION
FDV	FIRE DEPARTMENT VALVE
FEB	FIRE EXTINGUISHER BRACKET
FEC	FIRE EXTINGUISHER CABINET
FEXT	FIRE EXTINGUISHER
FF	FINISH FLOOR
FHC	FIRE HOSE CABINET
FH/FEC	FIRE HOSE/FIRE EXTINGUISHER CABINET
FHMS	FLAT HEAD MACHINE SCREW
FHWS	FLAT HEAD WOOD SCREW
FHV	FIRE HOSE VALVE
FHY	FIRE HYDRANT
FIN	FINISH
FIN FL	FINISH FLOOR
FIN GR	FINISH GRADE
FL	FLOOR(ING)
FLAM	FLAMMABLE
FLASH	FLASHING
FLEX	FLEXIBLE
FLR SK	FLOOR SINK
FLUOR	FLUORESCENT
FNR	FEMININE NAPKIN RECEPTACLE
FNTD	FEMININE NAPKIN-TAMPON DISPENSER
FOC	FACE OF CONCRETE
FOF	FACE OF FINISH
FOM	FACE OF MASONRY
FOP	FACE OF PARTITION ASSEMBLY
FOS	FACE OF STUDS
FRPF	FIREPROOFING
FRZR	FREEZER
FR SNK	FLUSHING RIM SINK
FS	FULL SIZE
FSB	FOLDING SHOWER BENCH
FSTNR	FASTENER
FT	FOOT, FEET
FTG	FOOTING
FURN	FURNITURE
FURR	FURRING
FUS	FOLDING UTILITY SEAT
FUT	FUTURE
FXTR	FIXTURE

G

G	GAS
GA	GAUGE, GAGE
GALV	GALVANIZED
GALVI	GALVANIZED IRON
GALVS	GALVANIZED STEEL
GB	GRAB BAR
GC	GENERAL CONTRACTOR
GFRC	GLASS-FIBER REINFORCED CONCRETE
GFRG	GLASS-FIBER REINFORCED GYPSUM
GL	GLASS
GL BLK	GLASS BLOCK
GLU LAM	GLUE LAMINATED
GLZ	GLAZING
GND	GROUND
GR	GRADE OR GRADING
GRV	GRAVITY ROOF VENTILATOR
GVL	GRAVEL
GYP BD	GYPSUM BOARD
GYP PLAS	GYPSUM PLASTER

H

H	HIGH
HAGL	HEAT ABSORBING GLASS
HB	HOSE BIBB
HC	HOLLOW CORE
HD	HEAD
HDBD	HARDBOARD
HDWD	HARDWOOD
HDWE	HARDWARE
HGT	HEIGHT
HM	HOLLOW METAL
HNDRL	HANDRAIL
HORIZ	HORIZONTAL
HPT	HIGH POINT
HR	HOUR
HVAC	HEATING-VENTILATION-AIR CONDITIONING
HVP	HARDWOOD VENEER PLYWOOD
HW	HOT WATER

I - J - K

ID	INSIDE DIAMETER
INCAND	INCANDESCENT
INCL	INCLUDE, INCLUDING
INFO	INFORMATION
INSTL	INTERSTITIAL
INSUL	INSULATION
INTR	INTERIOR
IPS	INSIDE PIPE SIZE
IVT	INTRAVENOUS TRACK
JAN	JANITOR
JB	JUNCTION BOX
JT	JOINT
KCP	KEENE'S CEMENT PLASTER
KIT	KITCHEN
KPL	KICK PLATE
KS	KNEE SPACE

L

LAB	LABORATORY
LAM	LAMINATION
LAV	LAVATORY
LB	POUND
LC	LINEN CHUTE
LCD	LINEAR CEILING DIFFUSER
LF	LINEAR FOOT
LG	LENGTH
LGL	LEADED GLASS
LH	LEFT HAND
LIN	LINEAR
LKRS	LOCKERS
LL	LEAD LINED
LONG	LONGITUDINAL
LP	LIGHT PROOF
LPT	LOW POINT
LT	LIGHT
LT WT	LIGHT WEIGHT
LTG	LIGHTING

M

M-AIR	MEDICAL GAS SYSTEM - AIR
M-VAC	MEDICAL GAS SYSTEM - VACUUM
M-G	MEDICAL GAS SYSTEM - GAS
MACH	MACHINE
MAN	MANUAL
MATL	MATERIAL
MATV	MASTER ANTENNA TELEVISION SYSTEM
MAX	MAXIMUM
MB	MACHINE BOLT
MC	MEDICINE CABINET
MDO	MEDIUM DENSITY OVERLAY
MECH	MECHANICAL
MEMB	MEMRANE
MET	METAL
MFR	MANUFACTURER
MGVB	MEDICAL GAS SHUTOFF & ALARM BOX
MH	MANHOLE
MH/S	MOP HOLDER WITH SHELF
MIN	MINIMUM
MIR	MIRROR
MISC	MISCELLANEOUS
ML	METAL LATH
MO	MASONRY OPENING
MOD	MODULE, MODULAR
MTD	MOUNTED
MTG	MOUNTING
MULL	MULLION

N

(N)	NEW
N	NORTH
NA	NOT APPLICABLE
NAT	NATURAL
NIC	NOT IN CONTRACT
NO	NUMBER
NOM	NOMINAL
NPS	NOMINAL PIPE SIZE
NRC	NOISE REDUCTION COEFFICIENT
NTS	NOT TO SCALE

O

OA	OVERALL
OB	OBSCURE
OC	ON CENTER
OD	OUTSIDE DIAMETER
OFCI	OWNER FURNISHED-CONTRACTOR INSTALLED
OFOI	OWNER FURNISHED-OWNER INSTALLED
OH	OPPOSITE HAND
OPNG	OPENING
OPP	OPPOSITE
ORD	OVERFLOW ROOF DRAIN
OVHD	OVERHEAD
OXY	OXYGEN

P

PA	PUBLIC ADDRESS
PBD	PARTICLEBOARD
PBX	PRIVATE TELEPHONE EXCHANGE
PC	PORTLAND CEMENT
PCD	PAPER CUP DISPENSER
PCF	POUNDS PER CUBIC FOOT
PDF	POWDER DRIVEN FASTENER
PE	PORCELAIN ENAMEL
PERF	PERFORATED
PERIM	PERIMETER
PERM	PERMANENT
PERP	PERPENDICULAR
PI	POINT OF INTERSECTION
PL	PLATE OR PROPERTY LINE
PLAM	PLASTIC LAMINATE
PLAS	PLASTER
PLAT	PLATFORM
PLBG	PLUMBING
PLF	POUNDS PER LINEAR FOOT
PLYWD	PLYWOOD
PMRS	PREFORMED METAL ROOFING SYSTEM
PNEU	PNEUMATIC
PNL	PANEL
PNL BD	PANEL BOARD
PORT	PORTABLE
PP	PUSH PLATE
PPM	PARTS PER MILLION
PR	PAIR
PREFAB	PREFABRICATED
PRKG	PARKING
PROJ	PROJECT
PROP	PROPERTY
PS CONC	PRESTRESSED CONCRETE
PSF	POUNDS PER SQUARE FOOT
PSI	POUNDS PER SQUARE INCH
PT	POINT
PTD	PAPER TOWEL DISPENSER
PTD/R	PAPER TOWEL DISPENSER & RECEPTACLE
PTN	PARTITION
PTR	PAPER TOWEL RECEPTACLE
PTS	PNEUMATIC TUBE SYSTEM
PT STA	PNEUMATIC TUBE STATION
PVC	POLYVINYL CHLORIDE
PVG	PAVING
PVMT	PAVEMENT
PWR	POWER

Q - R

QT	QUARRY TILE
QTR	QUARTER
QTY	QUANTITY
R	RISER
RA	RETURN AIR
RAD	RADIUS
RCP	REFLECTED CEILING PLAN
RD	ROOF DRAIN
REF	REFERENCE
REFR	REFRIGERATOR
REG	REGISTER
REINF	REINFORCE (D) (ING) (MENT)
REQD	REQUIRED
RESIL	RESILIENT
RET	RETURN
REV	REVISION
RH	RIGHT HAND
RHMS	ROUND HEAD MACHINE SCREW
RHWS	ROUND HEAD WOOD SCREW
RL	ROOF LEADER
RM	ROOM
RND	ROUND
RO	ROUGH OPENING
ROW	RIGHT OF WAY
RWL	RAIN WATER LEADER

S

S	SOUTH
SA	SUPPLY AIR
SB	SPLASH BLOCK
SC	SOLID CORE
SCD	SEAT COVER DISPENSER
SCHED	SCHEDULE
SCR	SHOWER CURTAIN ROD
SCRN	SCREEN
SD	SOAP DISH
SDL	SOAP DISPENSER, LIQUID
SDP	SOAP DISPENSER, POWDER
SECT	SECTION
SEG	SEGMENT
SEP	SEPARATION OR SEPARATE
SJ	SEPARATION JOINT
SHR	SHOWER
SHT	SHEET, SHEETING
SHV	SHELVES, SHELVING
SIM	SIMILAR
SK	SINK
SL	SLOPE
SMS	SHEET METAL SCREW
SP	SPACE, SPACED, SPACING
SPEC	SPECIFICATION
SPKLR	SPRINKLER
SPKR	SPEAKER
SQ	SQUARE
SQ FT	SQUARE FOOT
SQ IN	SQUARE INCH
SS	SANITARY SEWER
SSK	SERVICE SINK
SST	STAINLESS STEEL
ST	STREET
STAG	STAGGERED
STC	SOUND TRANSMISSION CLASS
STD	STANDARD
STL	STEEL
STOR	STORAGE
STRUCT	STRUCTURAL
STRUCT STL	STRUCTURAL STEEL
STS	SELF-TAPPING SCREW
SUSP	SUSPENDED
SUSP CLG	SUSPENDED CEILING
SVCE	SERVICE
SYMM	SYMMETRICAL

T

T	TREAD
T&B	TOP AND BOTTOM
T&G	TONGUE AND GROOVE
TB	TOWEL BAR
TC	TOP OF CONCRETE, TOP OF CURB
TEL	TELEPHONE
TEMP	TEMPORARY
TER	TERRAZZO
THERM	THERMAL
THK	THICK, THICKNESS
THRES	THRESHOLD
THRU	THROUGH
TK BD	TACK BOARD
TMPD GL	TEMPERED GLASS
TOL	TOLERANCE
TOT	TOTAL
TOSHTG	TOP OF SHEATING
TOP	TOP OF PRAPET
TOR	TOP OF ROOF
TP	TOP OF PAVEMENT
TPD	TOILET PAPER DISPENSER
TPH	TOILET PAPER HOLDER
TSL	TOP OF SLAB
TST	TOP OF STEEL
TTB	TELEPHONE TERMINAL BOARD
TV	TELEVISION
TW	TOP OF WALL
TYP	TYPICAL

U

UC	UNDER COUNTER
UNEX	UNEXCAVATED
UNFIN	UNFINISHED
UON	UNLESS OTHERWISE NOTED
UPS	UNINTERRUPTIBLE POWER SUPPLY
UR	URINAL
UTIL	UTILITY

V

VAC	VACUUM
VB	VINYL BASE
VCO	VACUUM CLEANER OUTLET
VCT	VINYL COMPOSITION TILE
VERT	VERTICAL
VEST	VESTIBULE
VFAT	VINYL FACED ACOUSTIC TILE
VIF	VERIFY IN FIELD
VNR	VENEER
VNR PLAS	VENEER PLASTER
VOL	VOLUME
VTR	VENT THROUGH ROOF
VWC	VINYL WALL COVERING

W

W	WEST
W/	WITH
W/O	WITH OUT
W/W	WALL TO WALL
WAU	WALL ASH URN
WC	WATER CLOSET
WD	WOOD
WDW	WINDOW
WF	WIDE FLANGE
WGL	WIRE GLASS
WHCH	WHEELCHAIR
WO	WHERE OCCURS
WP	WORKING POINT
WR	WATER RESISTANT
WSCT	WAINSCOT
WSP	WET STANDPIPE
WT	WEIGHT
WTRPRF	WATERPROOFING
WVF	WELDED SHEET VINYL FLOORING
WWF	WELDED WIRE FABRIC

X - Y - Z

XFMR	TRANSFORMER
ZV	ZONE VALVE BOX (RECESSED)

SYMBOLS AS ABBREVIATIONS

∠	ANGLE
@	AT
℄	CENTER LINE
°	DEGREE(S) OF ANGULAR MEASURE
Ø	DIAMETER
=	EQUAL
>	GREATER THAN
<	LESS THAN
∥	PARALLEL
⊥	PERPENDICULAR
±	PLUS OR MINUS (TOLERANCE)
#	POUND(S)
PL	PROPERTY LINE
'	FOOT OR FEET
"	INCH OR INCHES

Abbreviations

EGRESS IDENTIFIER

EXTERIOR ELEVATION IDENTIFIER

INTERIOR ELEVATION IDENTIFIER

BUILDING SECTION INDICATOR

DETAIL INDICATOR

WALL SECTION INDICATOR

DETAIL ENLARGEMENT INDICATOR

STATION/COLUMN INDICATOR

EXISTING STATION/ COLUMN INDICATOR

ELEVATION INDICATOR

MATCH LINE

KEYNOTE

DEMOLITION KEYNOTE

ELEVATION FINISH IDENTIFIER

WALL TYPE IDENTIFIER

WINDOW INDENTIFIER

EQUIPMENT IDENTIFIER

ROOM NUMBER IDENTIFIER

SHEET KEYNOTE

STOREFRONT INDENTIFIER

CEILING IDENTIFIER

RECESSED FIRE EXTINGUISHER CABINET

EXIT SIGN

BREAKLINE

CENTER LINE

REVISION CLOUD INDICATOR

DOOR IDENTIFIER

NORTH ARROW

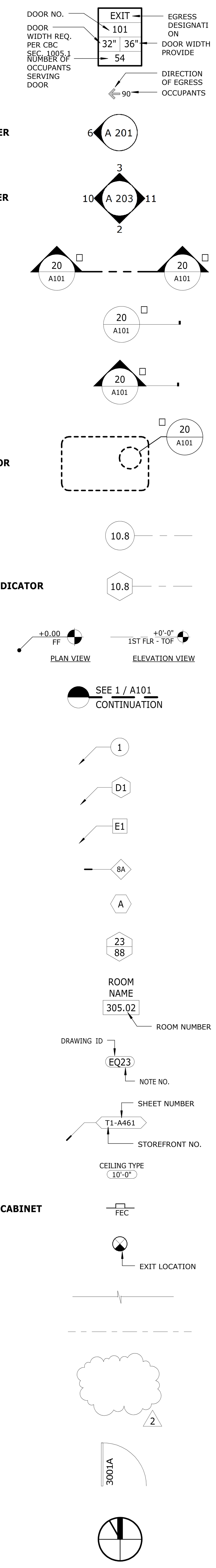

1. UNLESS NOTED OTHERWISE, ALL DIMENSIONS ARE F.O.S. (FACE OF STUD).

2. PRIOR TO COVERING WALLS, PROVIDE AND INSTALL BACKING FOR ALL SPECIFIED WALL HUNG ITEMS. SUCH ITEMS MAY CONSIST OF, BUT ARE NOT LIMITED TO, UPPER CABINETS, STORAGE SHELVING, WALL MOUNTED COUNTERS AND LAVATORIES, GRAB BARS, AND MISC. LAVATORY ACCESSORIES.

3. DO NOT SCALE DRAWINGS.

4. CONTRACTOR SHALL VERIFY ALL DIMENSIONS. IF ANY DISCRPANCIES ARE FOUND, THE ARCHITECT SHALL BE NOTIFIED IMMEDIATELY.

5. MEASURES SHALL BE TAKEN TO ASSURE THAT NO DEBRIS IS WASHED, BLOWN BY WIND, OR OTHERWISE DEPOSITED ONTO THE STREETS OR ADJACENT PROPERTIES.

6. CONTRACTOR TO VERIFY ALL CONDITIONS IN THE FIELD PRIOR TO BEGINNING THE PROJECT. ANY CONDITIONS THAT DO NOT AGREE WITH THE PLANS MUST BE BROUGHT TO THE ATTENTION OF THE ARCHITECT.

7. ALL CONCRETE WHICH IS REQUIRED TO BE REMOVED SHALL BE NEATLY SAWCUT AND/OR CORE DRILLED. ALL DEBRIS AND RUBBISH REMOVED FROM THE JOB SITE SHALL BE PROPERLY SECURED AND COVERED TO PREVENT SPILLAGE ONTO THE SITE OR ADJACENT PROPERTIES AND STREETS.

9. PROVIDE FIRE STOPS AT THE FOLLOWING LOCATIONS PER CBC 717:
A. IN CONCEALED SPACES OF STUD WALLS AND PARTITIONS, INCLUDING FURRED SPACES, AT THE CEILING AND FLOOR LEVELS AND AT 10 FOOT INTERVALS ALONG THE LENGTH OF THE WALL.
B. AT ALL INTERCONNECTIONS BETWEEN CONCEALED VERTICAL AND HORIZONTAL SPACES SUCH AS OCCUR AT SOFFITS, DROPPED CEILINGS AND COVERED CEILINGS.
C. IN OPENINGS AROUND VENTS, PIPES, DUCTS, CHIMINEYS, FIREPLACES AND SIMILAR OPENINGS WHICH AFFORD A PASSAGE FOR FIRE AT CEILING AND FLOOR LEVELS WITH NONCOMBUSTIBLE MATERIAL.

10. CONTRACTOR IS RESPONSIBLE TO COORDINATE POSITION OF DUCTS, CONDUITS, PIPES AND EQUIPMENT ABOVE CEILING, INCLUDING ALL FIRE SPRINKLERS, HVAC, ELECTRICAL AND PLUMBING LINES AND EQUIPMENT.

11. PROVIDE FIRE EXTINGUISHER TYPE 2A10BC IN RECESSED WALL MOUNTED CABINET. CABINET TO BE WITHOUT LOCKING DEVICE. MOUNT BOTTOM OF CABINET AS REQUIRED BY FIRE DEPARTMENT FIELD INSPECTOR, VERIFY CABINET COLOR WITH ARCHITECT. LOCATE WITHIN 75 FT. OF ALL UNITS AS INDICATED ON PLANS.

12. VERIFY ALL INTERIOR FINISH MATERIALS, TEXTURES AND COLOR SELECTIONS WITH OWNER.

13. VERIFY ALL FINISH HARDWARE SELECTIONS WITH OWNER

14. ALL PENETRATIONS OF 1 HOUR CONSTRUCTION SHALL BE SEALED WITH AN APPROVED FIRESTOP MATERIAL.

15. CONTRACTOR SHALL PREPARE THE SITE AND PERFORM SOIL PREPARATION AS REQUIRED BY SOILS REPORT.

16. PENETRATIONS IN FIRE RESISTIVE WALLS, PARTITIONS AND FLOORS WHERE PROTECTED OPENINGS ARE REQUIRED, SHALL BE FIRE STOPPED USING APPROVED MATERIALS, SECURELY INSTALLED AND CAPABLE OF MAINTAINING THEIR INTEGRITY AND PREVENTING THE MOVEMENT OF HOT FLAMES OR GASES THROUGH THE VOID SPACES BETWEEN PENETRATING MATERIALS AND WALLS, PARTITIONS AND FLOORS.

17. GLAZING SHALL COMPLY WITH CBC.

18. DIRECT ALL CONDENSATE LINES IN WALLS TO A GOUND LEVEL PLANTER.

19. FIRE DAMPERS SHALL BE INSTALLED PER CBC SECTION 716 AT ALL DUCTED OR UNDUCTED AIR OPENINGS AT PENETRATIONS OF CEILINGS OF FIRE-RESSITIVE ASSEMBLIES OR ROOF-CEILING ASSEMBLIES.

20. PROVIDE WATER HEATER SEISMIC ANCHOR STRAPS PER CODES.

21. PENETRATIONS OF FIRE-RESISTIVE WALLS, FLOOR-CEILINGS AND ROOF-CEILINGS SHALL BE PROTECTED AS REQUIRED IN CBC SECTIONS 712 AND 710.

22. PROVIDE FIBERGLASS BATT INSULATION AS FOLLOWS:
* R-38 AT ALL EXPOSED EXTERIOR FLOOR FRAMING
* R-38 AT ALL ROOF FRAMING
* R-19 AT ALL EXTERIOR WALLS
* SOUND BATT INSULATION AS INDICATED ONDRAWINGS

23. PER TITLE 24 ENERGY CALCS, SPECIAL INSPECTION IS REQUIRED BY A HERS RATER FOR DUCTWORK.

24. HAZARDOUS MATERIAL, CLASS 111 AND/OR 111-A FLAMMABLE AND/OR COMBUSTIBLE LIQUID SHALL NOT BE STORED OR USED IN ANY AMOUNT WITHIN THE BUILDING.

25. STRUCTURAL OBSERVATION BY THE ENGINEER / SHALL BE PERFORMED. A STATEMENT IN WRITING SHALL BE GIVEN TO THE BUILDING OFFICIAL, STATING THAT THE SITE VISITS HAVE BEEN MADE AND WHETHER OR NOT ANY OBSERVED DEFICIENCIES HAVE BEEN CORRECTED TO CONFORM TO THE APPROVED PLANS AND SPECIFICATIONS, CBC SECTION 1709.

26. THE CIVIL ENGINEER SHALL CERTIFY A LEVEL BUILDING PAD. REFER TO CIVIL DRAWINGS FOR ADDITIONAL GRADING INFORMATION AND FOR SLOPE AND HEIGHTS OF CUTS AND FILLS.

27. FIRE-RESISTIVE EXTERIOR WALL CONSTRUCTION SHALL BE MAINTAINED THROUGH ATTIC AREAS OR OTHER AREAS CONTAINING CONCEALED SPACES, CBC SECTION 704.

29. WALL AND CEILING MATERIALS SHALL NOT EXCEED THE FLAME SPREAD CLASSIFICATIONS IN UBC TABLE 803.5

30. WHEN SERVING MORE THAN 100 SPRINKLER HEADS, AUTOMATIC SPRINKLER SYSTEMS SHALL BE SUPERVISED BY AN APPROVED CENTRAL, PROPRIETARY OR REMOTE, STATION SERVICE, OR SHALL BE PROVIDED WITH A LOCAL FIRE ALARM WHICH WILL GIVE AN AUDIBLE SIGNAL AT A CONSTANTLY ATTENDED LOCATION. SECTION 903.4.

BAYLEY CONSTRUCTION

Bayley Construction
3730 S. Susan St.
Suite 200
Santa Ana, CA. 92704
CA. License 734880
Tel 714-540-8863
Fax 714-556-8863

Bayley Construction
8005 S.E. 28th St.
P.O. Box 9004
Mercer Island, WA. 98040
WA. License
BAYLEC034JC
Tel 206-621-8884
Fax 206-343-7728

DLR Group WWCOT
Architecture Engineering Planning Interiors

4280 Latham Street, Suite H
Riverside, California 92501
T 951.682.0470
F 951.682.1801

wwcot.com
dlrgroup.com

Santa Monica
Sacramento
Riverside
Palm Springs
Modesto
Shanghai, China

Copyright © 2010, DLR Group Inc. of California
DBA DLR Group WWCOT, All Rights Reserved

LICENSED ARCHITECT
PAMELA MARIE TOUSCHNER
C-24903
12/31/2011
STATE OF CALIFORNIA

Public Agency Submittal:
Issued for Bidding:
Issued for Construction:

Revisions:

FOR CONSTRUCTION

Phase I
FOX
ENTERTAINMENT
PLAZA
3605 Market Street
Riverside, CA 92501

City of Riverside

CITY OF RIVERSIDE

3900 Main Street , Riverside, CA 92522

Phase: CD
Revised 02.10.11
DLR Group Project No.75-10603-00

Symbols, Abbreviations and Project Notes

Issued Date: 02.10.11
Drawn By: Author
Checked By: Checker

A-G001

Sheet №

S H E E T I N D E X

SHEET NO.	SHEET DESCRIPTION
GENERAL	
A-G000	COVER SHEET
A-G001	Symbols, Abbreviations and Project Notes
A-G002	Sheet Index
A-G003	Code Analysis & Exiting Plan
A-G004	Accessibility Details
ARCHITECTURAL	
A-A001	Master Keynotes
A-A101	Site Plan
A-A102	Demolition Plan and Elevation
A-A111	Main / Orchestra and Balcony Level Floor Plans
A-A112	Cross-Aisle Level Floor Plan
A-A113	Roof Plan
A-A121	Ceiling Plans
A-A122	Ceiling Plans
A-A201	Building Elevations
A-A301	Building Sections
A-A302	Building Sections
A-A303	Building Sections
A-A304	Building Sections
A-A305	Building Sections
A-A306	Building Sections
A-A401	Stair Plans and Sections
A-A402	Elevator Plans and Sections
A-A501	Exterior Details
A-A502	Door / Curtain Wall Details
A-A503	Details
A-A531	Stair and Elevator Details
A-A601	Door and Window Schedules and Legends
STRUCTURAL	
A-S001	General Notes
A-S011	Typical Foundation and Reinforcing Details
A-S012	Typical Slab on Grade Details
A-S021	Typical CMU Wall Details
A-S022	Typical CMU Wall Details
A-S031	Typical Structural Steel Details
A-S032	Typical Metal Decking Details
A-S033	Typical Elevated Floor and Roof Deck Details
A-S111	Main/Orchestra Level Foundation and Balcony Level Framing Plans
A-S112	Upper Balcony Level Framing and Cross-Aisle Level Framing Plans
A-S113	Roof Framing Plan
A-S301	Miscellaneous Details
A-S302	Miscellaneous Details

SHEET NO.	SHEET DESCRIPTION
MECHANICAL	
A-M000	Mechanical Lead Sheet
A-M001	Mechanical Equipment Schedules
A-M101	Main/Orchestra & Balcony Level Floor Plan - Mechanical
A-M102	Cross-Aisle Level & Roof Plan - Mechanical
A-M201	Mechanical Details
A-M301	Mechanical Title 24 Forms
A-M302	Mechanical Title 24 Forms
ELECTRICAL	
A-E000	Electrical Lead Sheet
A-E001	Electrical Single Line Diagram
A-E002	Panel Schedules
A-E100	Existing Building Equipment Plan
A-E101	Main/Orchestra & Balcony Level Power Plan
A-E102	Cross-Aisle Level & Roof Power Plan
A-E201	Main/Orchestra & Balcony Level Lighting Plan
A-E202	Cross-Aisle Level Lighting Plan
A-E301	Lighting Fixture Schedule & Details
A-E302	Electrical Title 24 Forms
PLUMBING	
A-P000	Plumbing Lead Sheet
A-P100	Plumbing Site Plan
A-P101	Main/Orchestra & Balcony Level Floor Plan - Plumbing
A-P102	Cross-Aisle Level & Roof Plan - Plumbing
A-P111	Existing Main/Orchestra Level Floor Plan

Sheet Index

Bayley Construction
3730 S. Susan St.
Suite 200
Santa Ana, CA. 92704
CA. License 734880
Tel 714-540-8863
Fax 714-556-8863

Bayley Construction
8005 S.E. 28th St.
P.O. Box 9004
Mercer Island, WA. 98040
WA. License
BAYLEC034JC
Tel 206-621-8884
Fax 206-343-7728

BAYLEY CONSTRUCTION

DLR Group
WWCOT
Architecture Engineering Planning Interiors

4280 Latham Street, Suite H
Riverside, California 92501
T 951.682.0470
F 951.682.1801

wwcot.com
dlrgroup.com

Santa Monica
Sacramento
Riverside
Palm Springs
Modesto
Shanghai, China

Copyright © 2010, DLR Group Inc. of California
DBA DLR Group WWCOT. All Rights Reserved

LICENSED ARCHITECT
JAMES A. MARIE SOUBIRAN
C 24803
09/28/2011
STATE OF CALIFORNIA

Public Agency Submittal:
Issued for Bidding:
Issued for Construction:

Revisions:

FOR CONSTRUCTION

Phase I
FOX
ENTERTAINMENT
PLAZA
3605 Market Street
Riverside, CA 92501

City of Riverside

CITY OF RIVERSIDE

3900 Main Street , Riverside, CA 92522

Phase: CD
Revised 02.10.11
DLR Group Project No.75-10603-00

Sheet Index

Issued Date: 02.10.11
Drawn By: Author
Checked By: Checker

A-G002
Sheet №

File Path & Name: C:\Users\cbohigian\Desktop\75-10603-00 Riv Parking Garage 7_Phase I local bohigian.rvt
© WWCOT 2009 – Plotted 9/16/2011 4:47:15 PM

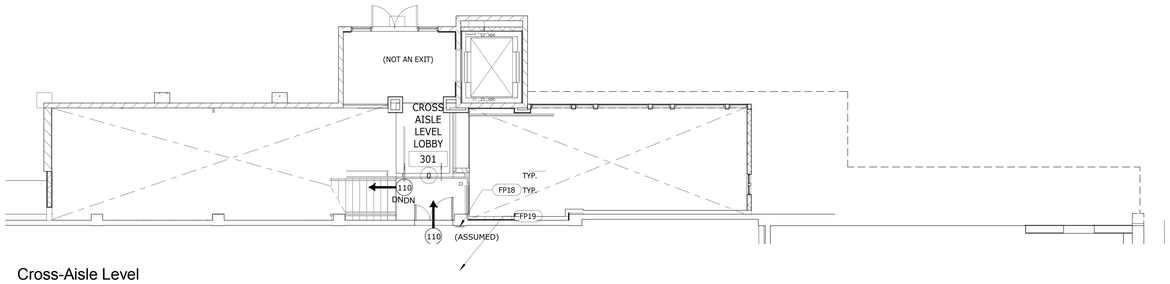

Cross-Aisle Level

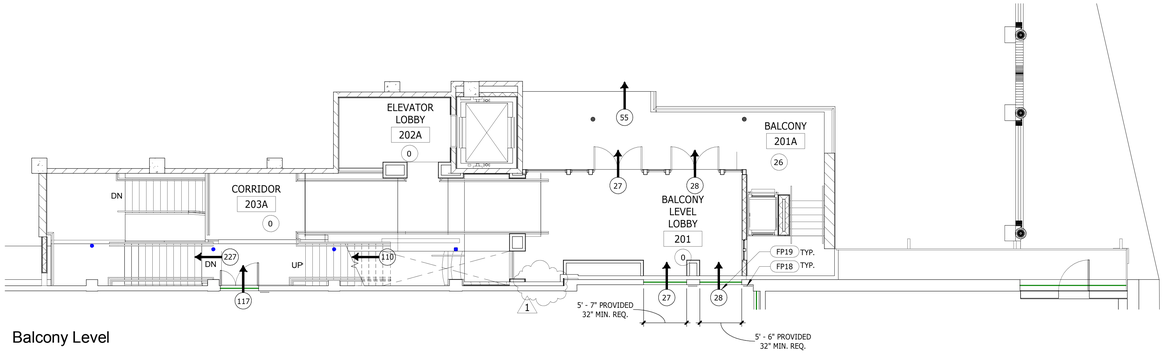

Balcony Level

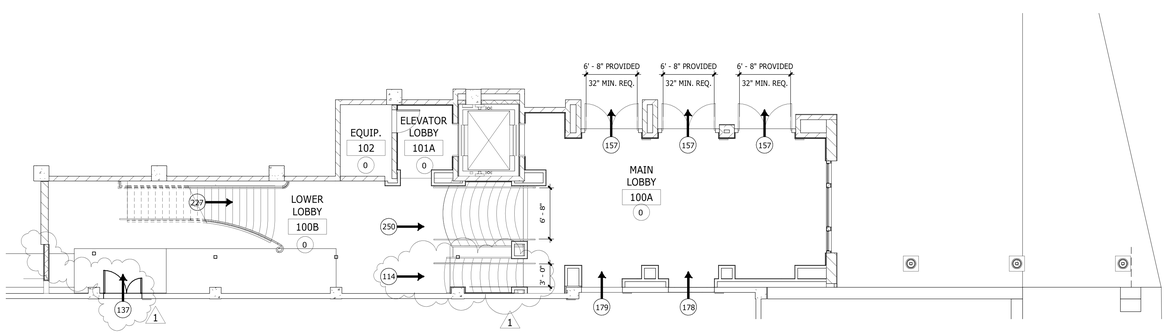

Main / Orchestra Level

Exiting Plan 9

Occupant Load Calculation per Table 1004.1.1

Number	Name	Occupancy	Function of Space	Area	# of Exits Required	# of Exits Provided	Ancillary Space
100A	MAIN LOBBY	A-1	ASSEMBLY w/o FIXED SEATS - UNCONCENTRATED	805 SF	0	3	YES
100B	LOWER LOBBY	A-1	ASSEMBLY w/o FIXED SEATS - UNCONCENTRATED	743 SF	0	1	YES
101A	ELEVATOR LOBBY	A-1	ASSEMBLY w/o FIXED SEATS - UNCONCENTRATED	60 SF	0	1	YES
102	EQUIP.	S-1	ACCESSORY STORAGE / MECHANICA EQUIP.	64 SF	0	1	YES
201	BALCONY LEVEL LOBBY	A-1	ASSEMBLY w/o FIXED SEATS - UNCONCENTRATED	355 SF	0	4	YES
201A	BALCONY	A-1	ASSEMBLY w/o FIXED SEATS - UNCONCENTRATED	405 SF	0	1	YES
202A	ELEVATOR LOBBY	A-1	ASSEMBLY w/o FIXED SEATS - UNCONCENTRATED	126 SF	0	1	YES
203A	CORRIDOR	A-1	ASSEMBLY w/o FIXED SEATS - UNCONCENTRATED	174 SF	0	1	YES
203B	ELEVATOR LOBBY		(none)	132 SF			
301	CROSS AISLE LEVEL LOBBY	A-1	ASSEMBLY w/o FIXED SEATS - UNCONCENTRATED	Not Enclosed	0	1	YES
				2864 SF			

NOTES:

SPACES ARE ANCILLARY AND DO NOT HAVE OCCUPANT LOADS
MIN. REQUIRED EGRESS WIDTH FOR ALL EXITS = 1,009 X .2" = 201.8" (PER CBC 2010 SECTION 1005)
MIN. EGRESS DOOR FOR EXITS IS 32" PER CBC 2010 SECTION 1008

Project Information and Building Data 3

I - BUILDING CODE SUMMARY

ITEM	DATA	CBC 2010 REFERANCE
OCCUPANCY TYPE	A-1	SECTION 303
CONSTRUCTION TYPE	II-A	TABLE 503
AUTOMATIC SPRINKLER SYSTEM	PROVIDED	TABLE 601 ITEM D
EXIT ACCESS TRAVEL DISTANCE	GROUP A 250'-0"	TABLE 1016.1
MAX. TRAVEL DISTANCE PROVIDED	200'-0"	

II - ALLOWABLE AREA MATRIX

TYPE II-A					
GROUP	HEIGHT (STORIES)		AREA		
	ALLOWABLE BY TABLE-503	PROVIDED	A(t) BASIC ALLOWABLE BY TABLE-503	A(a) - ALLOWABLE AREA	TOTAL AREA
A-1	65'-0" (3)	45'-0" (3)	15,500	--	4,383

III - FIRE RESISTENCE RATING REQUIREMENTS FOR BUILDING ELEMENTS (TABLE 601)

ITEM	PER TABLE 601	PER TABLE 601 W/FS (ITEM D)
STRUCTURAL FRAME	1 HR	1 HR
BEARING WALLS - EXTERIOR	1 HR	1 HR
BEARING WALLS - INTERIOR	--	--
NON BEARING WALLS AND PARTITION - EXTERIOR	1 HR	1 HR
NON BEARING WALLS AND PARTITION - INTERIOR	0 HR	0 HR
FLOOR CONSTRUCTION: BEAMS AND JOISTS	2 HR	2 HR
ROOF CONSTRUCTION: BEAMS AND JOISTS	1 HR	1 HR
OCCUPANCY SEPARATION	--	--

Allowable Building Area 1

Bayley Construction
3730 S. Susan St.
Suite 200
Santa Ana, CA. 92704
CA. License 734880
Tel 714-540-8863
Fax 714-556-8863

Bayley Construction
8005 S.E. 28th St.
P.O. Box 9004
Mercer Island, WA. 98040
WA. License
BAYLEC034JC
Tel 206-621-8884
Fax 206-343-7728

BAYLEY CONSTRUCTION

DLR Group
WWCOT
Architecture Engineering Planning Interiors

4280 Latham Street, Suite H
Riverside, California 92501
T 951.682.0470
F 951.682.1801

wwcot.com
dlrgroup.com

Santa Monica
Sacramento
Riverside
Palm Springs
Modesto
Shanghai, China

Copyright © 2010, DLR Group Inc. of California
DBA DLR Group WWCOT. All Rights Reserved

LICENSED ARCHITECT
JAMES A. MARIE SOUBIRAN
C 24803
9/19/2011
STATE OF CALIFORNIA

Public Agency Submittal:
Issued for Bidding:
Issued for Construction:

Revisions:

1 9/19/2011 Bulletin 1

FOR CONSTRUCTION

Phase I
FOX ENTERTAINMENT PLAZA
3605 Market Street
Riverside, CA 92501

City of Riverside

CITY OF RIVERSIDE

3900 Main Street , Riverside, CA 92522

Phase: CD
Revised 02.10.11
DLR Group Project No.75-10603-00

Code Analysis & Exiting Plan

Issued Date: 02.10.11
Drawn By: Author
Checked By: Checker

A-G003
Sheet №

File Path & Name: C:\Users\cbohigian\Desktop\75-10603-00 Riv Parking Garage 7_Phase 1 local bohigian.rvt
© WWCOT 2009 -- Plotted 9/16/2011 4:47:20 PM

NOTES:
1. INSTALL EMERGENCY TELEPHONE HANDSET 48" FROM FLOOR - MAX, WITH 29" MIN CORD.
2. INSTALL MINIMUM ONE HANDRAIL AT REAR 32" AFF AND 1 1/2" MIN CLEAR FROM WALL. HANDRAIL TO BE SMOOTH WITH NO SHARP EDGES.
3. ELEVATOR TO BE SELF-LEVELING TO WITHIN 1/2" OF FLOOR LANDING.

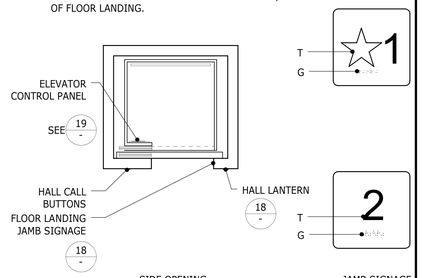

Elevator Cab

Scale 1/4" = 1'-0" | 8

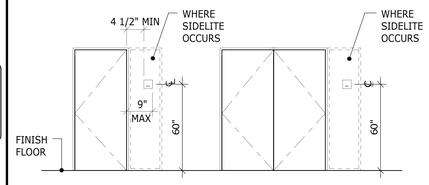

NOTES:
1. WALL MOUNT CENTERED 60" ABOVE FINISH FLOOR, ON LATCH SIDE OF DOOR.
2. CHARACTERS AND BACKGROUND TO HAVE NON-GLARE FINISH AND CONTRASTING COLOR TO WALL.
3. FOR SIGN TYPES AND LOCATIONS, SEE A8.6

Typical Sign Mounting

Scale 6" = 1'-0" | 4

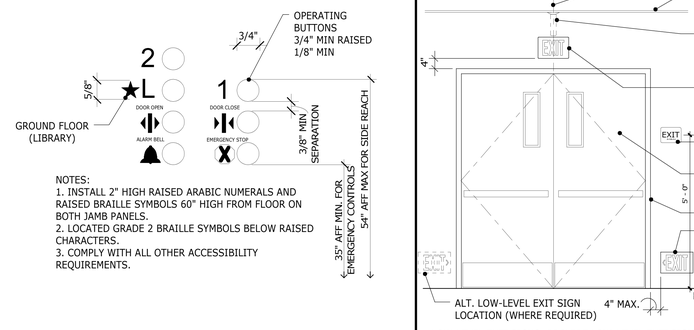

NOTES:
1. INSTALL 2" HIGH RAISED ARABIC NUMERALS AND RAISED BRAILLE SYMBOLS 60" HIGH FROM FLOOR ON BOTH JAMB PANELS.
2. LOCATED GRADE 2 BRAILLE SYMBOLS BELOW RAISED CHARACTERS.
3. COMPLY WITH ALL OTHER ACCESSIBILITY REQUIREMENTS.

Accessible Elevator Controls

Scale 6" = 1'-0" | 7

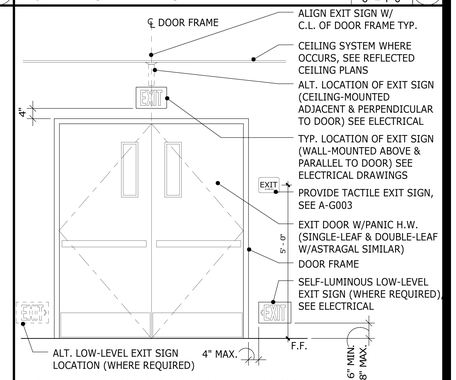

LOW-LEVEL EXIT SIGNS: PROVIDE LOW-LEVEL EXIT SIGNS AT INTERIOR RATED EXIT CORRIDORS PER CBC 1007.2.7 & 1007.3.12

Emergency Egress Signage

Scale 1/2" = 1'-0" | 3

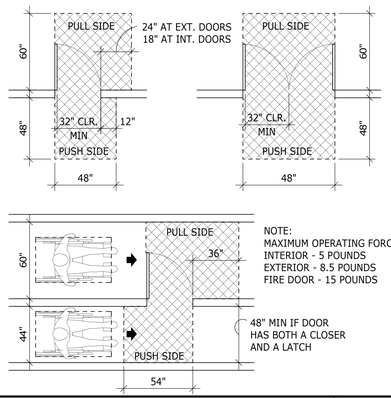

NOTE:
MAXIMUM OPERATING FORCE -
INTERIOR - 5 POUNDS
EXTERIOR - 8.5 POUNDS
FIRE DOOR - 15 POUNDS

48" MIN IF DOOR HAS BOTH A CLOSER AND A LATCH

Door Clearances

Scale 1/4" = 1'-0" | 6

NOTE:
PROTRUDING OBJECTS MAY NOT REDUCE THE REQUIRED CLEAR WIDTH OF AN ACCESSIBLE ROUTE OR MANUVERING SPACE

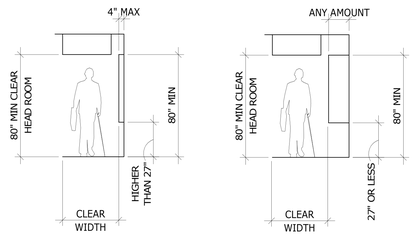

Accessible Route Clearances

Scale 1/4" = 1'-0" | 2

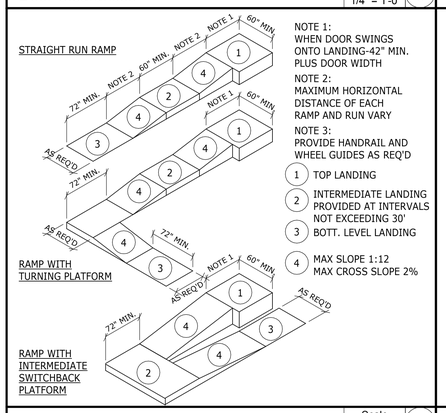

NOTE 1:
WHEN DOOR SWINGS ONTO LANDING-42" MIN. PLUS DOOR WIDTH

NOTE 2:
MAXIMUM HORIZONTAL DISTANCE OF EACH RAMP AND RUN VARY

NOTE 3:
PROVIDE HANDRAIL AND WHEEL GUIDES AS REQ'D

1. TOP LANDING
2. INTERMEDIATE LANDING PROVIDED AT INTERVALS NOT EXCEEDING 30'
3. BOTT. LEVEL LANDING
4. MAX SLOPE 1:12 MAX CROSS SLOPE 2%

Ramp

Scale 1/4" = 1'-0" | 5

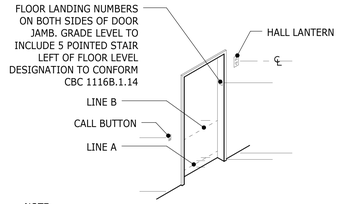

NOTE:
1. THE AUTOMATIC DOOR REOPENING DEVICE IS ACTIVATED IF AN OBJECT PASSES THROUGH EITHER LINE A OR LINE B, LINE A AND LINE B REPRESENT THE VERTICAL LOCATION OF THE DOOR REOPENING DEVICE NOT REQUIRING CONTACT
2. CALL BOTTON SHALL BE 3/4" MIN. IN SIZE AND SHALL BE RAISED 1/8" ABOVE THE SURROUNDING SURFACE.
3. SEE CBC 1116B.1.10 FOR MORE REQUIREMENTS.

Elevator Entrance

Scale 1/4" = 1'-0" | 1

Bayley Construction
3730 S. Susan St.
Suite 200
Santa Ana, CA. 92704
CA. License 734880
Tel 714-540-8863
Fax 714-556-8863

Bayley Construction
8005 S.E. 28th St.
P.O. Box 9004
Mercer Island, WA. 98040
WA. License
BAYLEC034JC
Tel 206-621-8884
Fax 206-343-7728

BAYLEY CONSTRUCTION

DLR Group WWCOT
Architecture Engineering Planning Interiors

4280 Latham Street, Suite H
Riverside, California 92501
T 951.682.0470
F 951.682.1801

wwcot.com
dlrgroup.com

Santa Monica
Sacramento
Riverside
Palm Springs
Modesto
Shanghai, China

Copyright © 2010, DLR Group Inc. of California
DBA DLR Group WWCOT. All Rights Reserved

LICENSED ARCHITECT
JAMES A. MARIE
C 24803
12/31/2011
STATE OF CALIFORNIA

Public Agency Submittal:
Issued for Bidding:
Issued for Construction:

Revisions:

FOR CONSTRUCTION

Phase I FOX ENTERTAINMENT PLAZA

3605 Market Street
Riverside, CA 92501

City of Riverside

CITY OF RIVERSIDE

3900 Main Street , Riverside, CA 92522

Phase: CD
Revised 02.10.11
DLR Group Project No.75-10603-00

Accessibility Details

Issued Date: 02.10.11
Drawn By: Author
Checked By: Checker

A-G004

Sheet №

File Path & Name: C:\Users\bobigian\Desktop\75-10603-00 Riv Parking Garage 7_Phase 1 local bobigian.rvt
© WWCOT 2009 -- Plotted 9/16/2011 4:47:23 PM

LOBBY ANNEX ELECTRICAL PLANS

ELECTRICAL LEGEND

REFER TO DETAILS FOR MOUNTING HEIGHTS OF DEVICES
NOT ALL SYMBOLS, ABBREV., ETC. ARE NECESSARILY USED ON THIS PROJECT

LIGHTING

SYMBOL	DESCRIPTION
	RECESSED LUMINAIRE (SIZE/SHAPE VARIES)
	SURFACE LUMINAIRE (SIZE/SHAPE VARIES)
	SHADING OF ANY LUMINAIRE INDICATES CONNECTION TO ALTERNATE POWER SOURCE (EMERGENCY, UPS, STANDBY, ETC.) PER CIRCUITING INDICATED
	SUSPENDED LUMINARE (SIZE/SHAPE VARIES)
	POINT SOURCE – SURFACE, RECESSED CEILING MTD.
	FLOOR OR GRADE MOUNTED BOLLARD
	WALLWASH – SURFACE, RECESSED CEILING MTD.
	WRAP-AROUND TYPE FLUORESCENT
	TRACK LIGHTING WITH HEADS AS INDICATED.
	ADJUSTABLE POINT SOURCE – SURFACE CEILING, RECESSED CEILING MOUNTED.
	BATTERY POWER EMERGENCY UNIT EQUIPMENT (SEE LUMINAIRES SCHEDULE FOR QUANTITY OF HEADS) – WALL, CEILING MOUNTED.
	WALL SCONCE
	ILLUMINATED EXIT SIGN, SHADED QUADRANT INDICATES FACES, ARROWS AS SHOWN
	POLE MOUNTED LUMINAIRE– SINGLE OR DUAL HEAD
	POLE TOP MOUNTED LUMINAIRE
	"FOOT" INDICATES WALL MOUNTED LUMINAIRE
	FLUORESCENT STRIPLIGHT – POWER FEED SECTION, FEED THROUGH SECTION. LENGTH AS SHOWN.
	UNDERCABINET FLUORESCENT STRIPLIGHT
	FLUSH GRADE POINT SOURCE
PTA 3c / PTA 3A	LUMINAIRE MARKING CONVENTION LEGEND: PTA = LUMINAIRE TYPE IDENTIFICATION. SEE LUMINAIRE SCHEDULE. 3c = CIRCUIT NUMBER VIA LOCAL SWITCH (LOWERCASE LETTER) THAT SERVES THE LUMINAIRE. 3A = CIRCUIT NUMBER/UPPERCASE LETTER COMBINATION INDICATES LOW VOLTAGE RELAY OR LIGHTING CONTACTOR THAT SERVES THE LUMINAIRE
F1	LUMINAIRE TYPE IDENTIFICATION WHICH APPLIES TO ALL OTHER IDENTICAL LUMINAIRE SYMBOLS, UON.

SWITCHING CONTROLS

SYMBOL	DESCRIPTION
S^a	SINGLE POLE SWITCH (SUPERSCRIPT DENOTES SIMILARLY MARKED LUMINAIRES CONTROLLED TOGETHER)
S_2	TWO POLE SWITCH
S_3	THREE WAY SWITCH
S_D	SINGLE POLE DOUBLE THROW MOMENTARY SWITCH
S_K	KEY OPERATED SWITCH
S_M	MOTOR RATED SWITCH
D	DIMMER SWITCH. NUMBER INDICATES WATTAGE RATING. IF NOT SHOWN THEN EQUAL TO LOAD.
S_P	SWITCH WITH PILOT LIGHT (PILOT IS "ON WHEN SWITCH IS "ON").
S_{TS}	TIMER SWITCH
S_{WP}	WEATHERPROOF SWITCH
S_T	THERMAL OVERLOAD SWITCH
S_R	LIGHTING RELAY SWITCH
S_V	LINE VOLTAGE, VARIABLE SPEED FAN CONTROL SWITCH, PROVIDED BY DIV. 15, INSTALLED BY DIV. 16. LOCATE ADJACENT TO LIGHT SWITCHES.
	LOW VOLTAGE MOMENTARY CONTACT SWITCH PANEL, NUMBER SUPERSCRIPT INDICATES SWITCH PANEL NUMBER (REFER TO LIGHTING CONTROL DIAGRAM)
	EQUIPMENT OPERATOR PUSH BUTTON STATION. PROVIDED WITH EQUIPMENT, INSTALLED AND CONNECTED BY DIV. 16, UON.
	PUSHBUTTON OR PUSHBUTTONS, BY DIV. 16
PC	PHOTOCELL
TC	TIME CLOCK
OS	OCCUPANCY SENSOR – WALL MOUNTED
OS	360 DEGREE OCCUPANCY SENSOR – CEILING MTD.
OS	180 DEGREE OCCUPANCY SENSOR – CEILING MTD.
OS	CORRIDOR/AISLE OCCUPANCY SENSOR – CEILING MOUNTED
OSab	OCCUPANCY SENSOR & SWITCH GANGED UNDER A COMMON COVER PLATE. OCCUPANCY SENSOR TO CONTROL ALL LIGHT FIXTURES IN ROOM WITH 1/2 LIGHT REDUCTION CONTROLLED BY SWITCH, DESIGNATED BY LETTER.
	THERMOSTAT – WALL, CEILING. PROVIDED BY MECHANICAL, INSTALLED AND WIRED BY ELECTRICAL.
A	AQUASTAT – PROVIDED BY DIV. 15, INSTALLED AND WIRED BY DIV. 16
EPO	EMERGENCY POWER OFF, HEAVY-DUTY, OIL-TIGHT RED MUSHROOM-HEAD PUSHBUTTON W/ GUARD.
LCP ?	LIGHTING CONTROL PANEL AND ASSOCIATED COMPONENTS. PROVIDE 120V OR 277V CONTROL POWER AS REQUIRED OR AS INDICATED.
	RELAY
TX	REMOTE MOUNTED LINE TO LOW-VOLTAGE FUSED TRANSFORMER. CONCEAL FROM VIEW.

DISTRIBUTION & EQUIPMENT

SYMBOL	DESCRIPTION
	BRANCH CIRCUIT PANELBOARDS, SURFACE AND RECESS MOUNTED, DASHED EQUIP. = FUTURE
	MOTOR CONTROL CENTER W/ CODE CLEARANCES SHOWN, DASHED EQUIP. = FUTURE
	TRANSFORMER WITH CODE CLEARANCES SHOWN
	SERVICE AND/OR DISTRIBUTION EQUIPMENT WITH CODE CLEARANCES SHOWN
	CONNECTION TO MOTOR PROVIDED BY OTHERS
VFD	CONNECTION TO DIV. 15 FURNISHED VARIABLE FREQUENCY DRIVE WITH INTEGRAL DISCONNECT DIV. 16 TO INSTALL VFD EQUIPMENT
30A	DISCONNECT SWITCH, SIZE AS NOTED OR IF NOT SHOWN SIZE PER CONNECTED MOTOR SIZE AND MOTOR DISCONNECT SCHEDULE
F 30A	FUSED DISCONNECT SWITCH, SIZE AS NOTED. SIZE FUSE PER MANUFACTURER'S RECOMMENDATIONS
C 60AT	ENCLOSED CIRCUIT BREAKER DISCONNECT SWITCH, TRIP SIZE AS NOTED.
	DISCONNECT W/ MAGNETIC MOTOR STARTER (CONTROLLER) OR CONTACTOR. SIZE PER LOAD SERVED. NEMA SIZE #1 MINIMUM.
	MAGNETIC MOTOR STARTER (CONTROLLER) OR CONTACTOR. SIZE PER LOAD SERVED. NEMA SIZE #1 MINIMUM.
	DIV. 16 CONNECTION TO EQUIPMENT PROVIDED BY OTHERS. SHADED = ON ALT. POWER SOURCE NOTED
	DIV. 16 CONNECTION TO EQUIPMENT WITH INTEGRAL DISCONNECT THAT IS PROVIDED BY OTHERS. SHADED = ON ALT. POWER SOURCE NOTED
	EQUIPMENT OR TERMINAL ENCLOSURE AS NOTED, SURFACE AND RECESS MOUNTED
	BUILDING GROUND BUS, SEE DETAILS
DM	DAMPER MOTOR

DIAGRAMS

SYMBOL	DESCRIPTION
	HAND/OFF/AUTO SWITCH
	SWITCH
	FIELD INSTALLED CONTROL CIRCUIT WIRING TO DESTINATION SHOWN, U.O.N.
	NORMALLY CLOSED CONTACTOR OR RELAY CONTACTS
	NORMALLY OPEN CONTACTOR OR RELAY CONTACTS
	BUS DUCT
	BUS BAR
	BATTERY GENERAL
	RESISTOR
	CONNECTOR, FEMALE AND MALE RESPECTIVELY
	PIPE GROUND
C	CONTACTOR COIL
R	RELAY COIL
TVSS	TRANSIENT VOLTAGE SURGE SUPPRESSOR
	CURRENT TRANSFORMER
	NORMALLY OPEN PUSH BUTTON
	NORMALLY CLOSED PUSH BUTTON
M M	UTILITY CO. APPROVED SOCKET WITH METER INSTALLED. SQUARE = REMOTE MOUNTED
DMU	DIGITAL METER UNIT. REFER TO SPECIFICATIONS.
	TERMINAL FOR FIELD CONNECT, SIZE & TYPE SUITABLE FOR CONDUCTOR INSTALLED.
	LED INDICATOR LIGHT, PUSH TO TEST, R=RED G= GREEN, B= BLUE, Y= YELLOW, W= WHITE
	DELTA CONNECTION
	GROUNDED WYE CONNECTION
	CONNECTION TO GROUND
100AT 225AF	CIRCUIT BREAKER, WITH TRIP & FRAME AMPERE RATING
225AF 400AS	FUSED SWITCH, WITH FUSE AND SWITCH AMPERE RATING
GF	GROUND FAULT TRIP UNIT
BA	BELL ALARM TRIP MODULE CONTACTS
ST	SHUNT TRIP UNIT, 120VAC OR VOLTAGE AS NOTED
CM	MONITORING COMMUNICATION MODULE
AM	INTEGRAL AMMETER DISPLAY
K	KEY INTERLOCK
	MECHANICAL INTERLOCK
	GENERATOR
C	CONNECTION TO DIV. 15 CHILLER
	SOLENOID

POWER DEVICES

SYMBOL	DESCRIPTION
	SIMPLEX RECEPTACLE – WALL, CEILING, ON ALT.
	DUPLEX RECEPTACLE – WALL, CEILING, ON ALT.
	DOUBLE DUPLEX RECEPTACLE – WALL, CLG, ON ALT.
L5-15R	SPECIAL PURPOSE RECEPTACLE –WALL, CEILING ON ALT. POWER; NEMA CONFIGURATION AS NOTED
AB	RECEPTACLE TYPE SHOWN –WALL –ABOVE COUNTER BACKSPLASH. SEE ARCHITECTURAL DRAWINGS.
"ON ALT."	SHADED RECEPTACLES NOTED "ON ALT." ABOVE ARE CONNECTED TO ALTERNATE POWER SOURCE (EMERG., STANDBY, UPS, ETC.) PER CIRCUITING INDICATED
	DUPLEX RECEPTACLE – WALL – HALF SWITCHED
	COMBINATION SWITCH/DUPLEX RECEPTACLE
GFI	DUPLEX RECEPTACLE – WALL – WITH INTEGRAL GROUND FAULT CIRCUIT INTERRUPTER
WP	RECEPT. TYPE SHOWN W/ WEATHERPROOF COVER AND INTEGRAL GROUND FAULT CIRCUIT INTERRUPTER
+42"	RECEPT. TYPE SHOWN AT SPECIAL HEIGHT
J	WALL MOUNTED ELECTRICAL CONNECTION TO ELECTRIFIED FURNITURE. PROVIDE 8 WIRES (4 HOTS, 1 DEDICATED NEUTRAL, 1 COMMON NEUTRAL, 1 ISOLATED GROUND) NEUTRALS TO BE #10 AWG. USE LIQUID-TIGHT FLEX.
WP	DUPLEX RECEPTACLE SHOWN W/ WEATHERPROOF COVER, INTEGRAL GROUND FAULT CIRCUIT INTERRUPTER, AND STUB DOWN TO CLNG. SPACE BELOW.
	FLUSH FLOOR BOX DEVICE – DEVICE TYPE PER SYMBOLS ABOVE
	POKE THRU UNIT WITH DUPLEX RECEPTACLE – FLUSH, (WIREMOLD RC7 SERIES)
	COMBO POKE THRU UNIT WITH DUPLEX RECEPTACLE AND DATA OUTLET – FLUSH, (WIREMOLD RC7 SERIES)
	COMBO POKE THRU UNIT WITH DOUBLE DUPLEX RECEPTACLE AND DATA OUTLET – FLUSH, (WIREMOLD RC9 SERIES)
	COMBO POKE THRU UNIT WITH DUPLEX (WIREMOLD RC7 SERIES)
	COMBO POKE THRU UNIT WITH DOUBLE DUPLEX (WIREMOLD RC9 SERIES)
C	DATA OUTLET ABOVE CEILING FOR WIRELESS NETWORK. PROVIDE 2 UTP TO IDF.
	MULTI-SERVICE FLOOR BOX CAST IN CONC. OR IN RAISED FLOOR – SEE ARCH DWGS; WITH RECEPTACLES & SIGNAL OUTLETS AS NOTED. 2=QUANITY TWO OR MORE OF DATA LINES REQUIRED
J	POKE THRU ASSEMBLY, PROVIDE THE FOLLOWING (WIREMOLD OR EQUAL): FURNITURE FEED (POWER/LTG)=RC7AFFTC SERIES FURNITURE FEED (TELCOM) = RC9AM2TC SERIES AUDIO/VIDEO FEED = RC9AM2ST SERIES [NOTE: PROVIDE CONDUIT CONNECTORS FOR FURNITURE FEED (POWER/LTG & TELCOM)]
	TWO OR THREE COMPARTMENT SURFACE METAL RACEWAY WITH RECEPTACLES AND OUTLETS AS INDICATED, LENGTH AS INDICATED ON THE DRAWINGS. PROVIDE ALL FITTINGS AS REQUIRED.

SIGNAL DEVICES

SYMBOL	DESCRIPTION
	TERMINAL/MOUNTING BOARD, 8' HIGH X WIDTH AS SHOWN, FIRE TREATED.
	SIGNAL SYSTEM EQUIPMENT ENCLOSURES AS NOTED– SURFACE, RECESSED MOUNTED
#	COMBO TELEPHONE/DATA OUTLET – WALL
# W	TELEPHONE OUTLET – WALL, W = USE HIGHER MOUNTING HEIGHT PER MOUNTING HT. DETAIL
#	DATA OUTLET – WALL TEL/DATA MARKING CONVENTION LEGEND: # = IDENTIFICATION OF OUTLET TYPE, SEE FLOOR PLANS FOR SUPPLEMENTAL LEGEND
C	CEILING DATA OUTLET
S S	SPEAKER – WALL, CEILING
V	VOLUME CONTROL – WALL
B	BELL
	BUZZER
	CHIME
C C	SYSTEM CLOCK – WALL , CEILING
TV VJ	RF COAX CABLE OUTLET (TV, VCR, ETC.) SEE ARCH DWG.
	RF COAX CABLE SIGNAL SPLITTER
	RF COAX CABLE DISTRIBUTION AMPLIFIER. PROVIDE 120V POWER AS REQUIRED OR AS INDICATED. SEE RISER DIAGRAM.
I M	INTERCOM STATION – WALL, DESK M = MASTER STATION
M M	MICROPHONE JACK – WALL, FLOOR
	FLUSH FLOOR DEVICE – DEVICE TYPE PER SYMBOLS ABOVE
	PEDESTAL FLOOR DEVICE – DEVICE TYPE PER SYMBOLS ABOVE
SK PA	PAGING SYSTEM HORN (OUTDOOR)
S_D S_D	DUAL COIL SPEAKER – SURFACE CEILING, RECESSED CEILING.
S	PAGING OR PAGING/SOUND MASKING SPEAKER, MOUNTED ABOVE ACOUSTIC TILE CEILING.
	ROOM PUSHBUTTON (EDWARDS #620 OR EQUAL) WITH ROOM ANNUNCIATOR MOUNTING PLATE (EDWARDS 147-10 OR EQUAL).
C	CHIME/STROBE COMBO: EDWARDS #6563-G5 WITH XFMR (EDWARDS #592) OR EQUAL

FIRE ALARM SYSTEM

SYMBOL	DESCRIPTION
FACP	FIRE ALARM CONTROL PANEL AND ASSOCIATED COMPONENTS. PROVIDE 120V POWER AS REQUIRED OR AS INDICATED.
FSA	FIRE ALARM SYSTEM ANNUNCIATOR
F	FIRE ALARM SYSTEM MANUAL PULL STATION, WALL MOUNTED
	ALARM BELL OR GONG
30	STROBE LIGHT, WALL MOUNTED (# = CANDELA RATING)
SK , SK	SPEAKER – CEILING, WALL MOUNTED
SK 15	COMBINATION SPEAKER/STROBE, WALL MOUNTED (# = CANDELA RATING)
	SPRINKLER VALVE TAMPER SWITCH CONNECTION
	SPRINKLER FLOW SWITCH CONNECTION
	SMOKE DETECTOR, DUCT MOUNTED, WITH FULL WIDTH SAMPLING TUBES. PHOTOELECTRIC TYPE UON.
	SMOKE DETECTOR, CEILING OR PLENUM, WALL MOUNTED. MULTI-SENSOR TYPE UON.
E E	ELEVATOR RECALL SMOKE DETECTOR, CEILING OR PLENUM, WALL MOUNTED. MULTI-SENSOR TYPE UON.
	ELECTROMAGNETIC DOOR HOLDER – WALL, FLOOR MOUNTED. 24VDC AND PROVIDED BY DIV. 8 UON.
CM	ADDRESSABLE CONTROL MODULE
MM	ADDRESSABLE MONITOR MODULE
D	DUCT OR AREA SMOKE DETECTOR, AS REQUIRED, UON. SERVING DIV. 15 FIRE/SMOKE DAMPER.
	HEAT DETECTOR, CEILING MOUNTED. RATE OF RISE AND FIXED TEMPERATURE TYPE, UON.
F	FIRE ALARM CONDUIT

SECURITY SYSTEM

SYMBOL	DESCRIPTION
	CCTV SECURITY FIXED CAMERA – WALL,CEILING
	CCTV SECURITY INDOOR DOME CAMERA
PTZ	CCTV SECURITY PAN/TILT/ZOOM CAMERA
MRIB	INTELLIGENT CARD READER INTERFACE
MO	ROLL-UP DOOR MOTOR CONTROL OUTPUT
D	DOOR POSITION MONITOR SWITCH
RX RX	REQUEST TO EXIT DEVICE WALL,MULLION MOUNTED
I M	INTERCOM STATION – WALL, DESK MOUNTED. M = MASTER STATION
DS	DURESS PUSHBUTTON STATION
CR CR	CARD READER– WALL MOUNTED/MULLION MOUNTED
ER	EMERGENCY DOOR RELEASE BREAK-GLASS STATION
N	LOCAL DOOR MONITOR WARNING NOISE DEVICE
EB	ELECTRIC BOLT
EL	ELECTRIC LOCK/LATCH
ES	ELECTRIC STRIKE
ML	MAGNETIC LOCK
GB	GLASS BREAK SENSOR
H	ELECTRIC POWER TRANSFER HINGE
	SECURITY ELECTRONIC MOTION SENSOR

REFERENCE SYMBOLS

SYMBOL	DESCRIPTION
12	SHEET NOTE REFERENCE
125.4	BRANCH CIRCUIT OR FEEDER NOMINAL AMPACITY & TYPE; REFER TO BRANCH CIRCUIT AND FEEDER SCHEDULES FOR WIRE AND CONDUIT SIZES & QTY.
1 T4.1	REFER TO DETAIL NO. ON DRAWING INDICATED NOT ALL DETAIL REFERENCES ARE SHOWN. ALL DETAILS APPLY TO ALL APPLICABLE SITUATIONS, UON.
2 T4.1	ELEVATION TAG: REFER TO ELEVATION NUMBER ON DRAWING INDICATED
2 T4.1	SECTION TAG: REFER TO SECTION NUMBER ON DRAWING INDICATED
K123	KITCHEN EQUIPMENT REFERENCE, REFER TO KITCHEN EQUIPMENT SCHEDULE
CH 1	MECHANICAL EQUIPMENT IDENTIFICATION TAG
EQUIP NAME	EQUIPMENT IDENTIFICATION TAG

WIRING

SYMBOL	DESCRIPTION
	NEW WIRING CONCEALED IN CEILING OR WALL.
	LINE WEIGHT TOP TO BOTTOM= EXISTING TO REMAIN, FUTURE
	WIRING CONCEALED IN FLOOR OR UNDER GRADE OR ROUTED IN CEILING SPACE OF FLOOR BELOW. LINE WEIGHT TOP TO BOTTOM= NEW, EXISTING TO REMAIN, FUTURE
	WIRING EXPOSED. LINE WEIGHT TOP TO BOTTOM= NEW, EXISTING TO REMAIN, FUTURE
X X X	EXISTING WIRING TO BE REMOVED
T	TELEPHONE SYSTEM CONDUIT
MV	MEDIUM VOLTAGE CONDUIT
G G	GROUNDING GRID OR CONDUCTORS
C	CONTROL CONDUIT
	STROKES INDICATE QUANTITY OF #12 AWG. CONDUCTORS, UON. NOTE: SEE BRANCH CIRCUIT WIRING LEGEND.
	GROUND
	HOT
	GROUND, ISOLATED
	NEUTRAL
L1A-1,3 HD1A	HOME RUN WIRING TO INDICATED DESTINATION, 3/4"C. MIN. OR AS OTHERWISE NOTED. CONTRACTOR SHALL USE CIRCUIT SIZES NOTED.
	CONDUIT RUN TURNED UP THROUGH FLOOR OR CEILING. CORE & FIREPROOF AS REQUIRED.
	CONDUIT RUN TURNED DOWN THROUGH FLOOR OR CEILING. CORE & FIREPROOF AS REQUIRED.
	CONDUIT STUBBED OUT AT LOCATION SHOWN. PROVIDE INSULATED BUSHING & PULLROPE.
	RACEWAY STUBBED OUT FOR FUTURE CONTINUATION; CAP, MARK AND RECORD LOCATION.
	TELEPHONE/DATA SLEEVE THROUGH WALL, ABOVE CEILING. EXTEND TO ACCESSIBLE TILE CLG. BOTH SIDES. TERMINATE WITH BUSHINGS. (1) 1.25" CO UON. COORDINATE LOCATIONS WITH CABLE INSTALLER(S) PRIOR TO ROUGH-IN.
J J J	JUNCTION BOXES, WALL, CEILING AND FLUSH FLOOR MOUNTED. 4" SQ. BOX MIN., LARGER IF REQUIRED
PB	PULL BOX, MIN. SIZE PER NEC., UON.
	FLEXIBLE CONDUIT CONNECTION

BRANCH CIRCUIT WIRING LEGEND

	1/2"C	3#12*	10	1/2"C	3#10	8	3/4"C	2#8 & 1#10G
	1/2"C	4#12*	10	1/2"C	4#10	8	3/4"C	3#8 & 1#10G
	1/2"C	5#12*	10	3/4"C	5#10	8	1"C	4#8 & 1#10G
	3/4"C	6#12*	10	3/4"C	6#10	8	1"C	5#8 & 1#10G
	3/4"C	7#12*	10	1"C	7#10	8	1-1/4"C	6#8 & 1#10G
	1"C	8#12*	10	1"C	8#10	8	1-1/4"C	7#8 & 1#10G
	1"C	9#12*	10	1"C	9#10	8	1-1/4"C	8#8 & 1#10G

* FOR 120 VOLT RECEPTACLE WIRING, PROVIDE #10 AWG NEUTRAL CONDUCTORS MINIMUM.

NOTE: SYMBOL INCLUDES EQUIPMENT GROUND CONDUCTOR (NOT INDICATED).

POWER & DATA LEGEND

- DUPLEX WALL RECEPTACLE @ +18" A.F.F. (U.N.O.)
- 220 V OUTLET, L620R MOUNT ON RACK ABOVE SERVER. VERIFY IN FIELD
- COPY: 220 V WALL RECEPTACLE FOR COPY MACHINE @ +18". VERIFY RECEPTACLE CONFIGURATION WITH OWNER
- DEDICATED DUPLEX WALL RECEPTACLE @ +18" A.F.F. (U.N.O.)
- WALL MOUNTED POWER & TEL/DATA FEEDS TO SYSTEM FURNITURE. PROVIDE MIN. 2" DATA CONDUIT FROM J-BOX INTO ACCESSIBLE CEILING SPACE. ELECTRICAL CONTRACTOR TO MAKE FINAL CONNECTION.
- COMBINATION DATA/TEL. WALL RECEPT. @ +18" A.F.F. (U.N.O)
- DOUBLE DUPLEX WALL RECEPTACLE @ 18" A.F.F. (U.N.O.)
- DEDICATED DOUBLE DUPLEX WALL RECEPT. @ 18" A.F.F. (U.N.O.)
- CR: 3/4" CONDUIT UP INTO CEILING SPACE FOR CARD READER. INSTALL CARD READER AT 48" A.F.F. TO TOP OF DEVICE.
- IC: INTERCOM LOCATION– PROVIDE 3/4" CONDUIT ONLY UP INTO ACCESSIBLE CEILING SPACE.
- VJ: PLASMA TV J-BOX, FSR INC. PWB-100 W/ DUPLEX OUTLET AND (2) LOW VOLTAGE ENTRY BOX (TOP & BOTT). EXTEND 1-1/2" CONDUIT TO WALL MTD. J-BOX AND UP TO ACCESSIBLE CEILING SPACE.
- TV: SINGLE GANG BOX (3) COAX RG6 HOMERUN TO MDF ROOM 09.
- KP: KEYPAD LOCATION– PROVIDE 3/4" CONDUIT ONLY UP INTO ACCESSIBLE CEILING SPACE.
- PB: 3/4" CONDUIT UP INTO CEILING SPACE FOR LOW VOLTAGE PANIC BUTTON WIRING
- D: 3/4" CONDUIT UP INTO CEILING SPACE FOR LOW VOLTAGE DOOR RELEASE WIRING.
- J: WALL SURFACE MOUNTED JUNCTION BOX
- FLUSH FLOOR MOUNTED POKE-THRU POWER & AV/DATA FEEDS TO CONFERENCE TABLE. ELECTRICAL CONTRACTOR TO MAKE FINAL CONNECTION.
- FLUSH FLOOR MOUNTED POKE-THRU AV/DATA FEEDS TO CONFERENCE TABLE.
- FLUSH FLOOR MOUNTED BOX POWER & AV/DATA FEEDS TO CONFERENCE TABLE. ELECTRICAL CONTRACTOR TO MAKE FINAL CONNECTION.
- FLUSH FLOOR MOUNTED BOX POWER & TEL/DATA FEEDS TO SYSTEM FURNITURE. ELECTRICAL CONTRACTOR TO MAKE FINAL CONNECTION.
- FLUSH FLOOR MOUNTED POKE-THRU POWER & TEL/DATA FEEDS TO SYSTEM FURNITURE. ELECTRICAL CONTRACTOR TO MAKE FINAL CONNECTION.
- FLUSH FLOOR MOUNTED BOX TEL/DATA FEED TO SYSTEM FURNITURE.
- FLUSH FLOOR MOUNTED POKE-THRU TEL/DATA FEED TO SYSTEM FURNITURE.
- FLUSH FLOOR MOUNTED BOX AV/DATA AND DUPLEX RECEPTACLES.
- FLUSH FLOOR MOUNTED POKE-THRU TEL/DATA AND DUPLEX RECEPTACLES.
- ABOVE CEILING J-BOX FOR WIRELESS NETWORK LOCATION, PROVIDE DUPLEX OUTLET ABOVE CEILING.
- DATA FP: FURNITURE SYSTEM POWER POLE FOR TEL/DATA CABLES ONLY.
- FP: FURNITURE SYSTEM POWER & TELE/DATA POLE CONNECTED TO J-BOX ABOVE CEILING.
- J: FLOOR / SURFACE MOUNTED JUNCTION BOX.
- FLOOR / SURFACE MOUNTED DUPLEX OUTLET.
- FLOOR / SURFACE MOUNTED FOURPLEX OUTLET.
- E: EXISTING
- MODULAR FURNITURE SYSTEM. ELECTRICAL SHOWN FOR TYPICAL WORKSTATION CONFIGURATION. POWER TO BE FURNISHED WITH WORKSTATIONS.
- 3/4" THICK x FULL HEIGHT PLYWOOD BACKBOARD. INSTALL TOP EDGE FLUSH TO CEILING. UNLESS NOTED OTHERWISE. PAINT TO MATCH ADJACENT WALL PRIOR TO EQUIPMENT INSTALLATION.

ELECTRICAL GENERAL NOTES

A. THE SCALE INDICATED ON THE PLANS AND DETAILS IS BASED ON FULL SIZE DRAWINGS. REDUCED DRAWINGS MAY BE ISSUED. EXAMPLE: 1/4" SCALE FLOOR PLANS ARE REDUCED TO 1/8" = 1'-0" ON HALF SIZE PRINTS. SEE SCALE MARKINGS ON DRAWINGS.

B. MOUNT WALL OUTLETS AND RECEPTACLES AT +18" VERTICALLY, UNLESS OTHERWISE NOTED OR AS REQUIRED TO CLEAR COUNTERTOPS, BACKSPLASHES, BOOKCASES AND SHELVES. REFER TO ARCHITECTURAL DRAWINGS FOR CASEWORK DETAILS. REFER TO THE ELECTRICAL SPECIFICATIONS FOR ADDITIONAL REQUIREMENTS.

C. MOUNT SWITCHES, THERMOSTATS AND DEVICES REQUIRING OBSERVATION OR OPERATION AT +42", UNLESS OTHERWISE NOTED. REFER TO THE ELECTRICAL SPECIFICATIONS.

D. ALL ELECTRICAL CONDUIT CROSSING BUILDING SEISMIC SEPARATIONS OR EXPANSION JOINTS SHALL BE PROVIDED WITH APPROVED FLEXIBLE CONNECTORS.

E. ALL WORK TO COMPLY WITH THE 2010 CALIFORNIA ELECTRICAL CODE, 2008 NATIONAL ELECTRICAL CODE, CALIFORNIA FIRE CODE 2010 AND CALIFORNIA BUILDING CODE WITH LOCAL AMENDMENTS.

F. ALL EQUIPMENT MUST BE LISTED AND LABELED BY A RECOGNIZED TESTING AGENCY, IE U.L.

G. ALL CONDUCTORS TO BE COPPER THHN/THWN MIN. ROMEX/NON-METALLIC SHEATHED CONDUCTORS NOT PERMITTED.

H. THE COLD WATER LINE GROUND CONNECTION SHALL BE MADE WITHIN 5' FROM THE POINT OF COLD WATER LINE ENTRY TO THE BUILDING.

J. NOT USED.

K. TEST FOR EXIT ILLUMINATION AND EXIT SIGNS, INCLUDING DIRECTIONAL EXIT SIGN TELECOMED BY EITHER THE NORMAL PREMISES WIRING OR ANY ADDITIONAL REQUIRED EMERGENCY SYSTEMS SHALL BE CONDUCTED IN THE PRESENCE OF THE BUILDING INSPECTION STAFF TO ENSURE COMPLIANCE. THE TEST TIMES FOR EMERGENCY SYSTEMS SHALL BE ARRANGED IN ADVANCE AND ALL STAFFING COSTS ASSOCIATED WITH EITHER PRE- OR AFTER HOURS TESTING SHALL BE PAID AT THIS TIME. THE TESTING AND APPROVAL OF SUCH SYSTEMS SHALL OCCUR PRIOR TO THE ISSUANCE OF A TEMPORARY CERTIFICATE OF APPROVAL OR FINAL APPROVAL OF THE PROJECT.

L. FIRE ALARM SYSTEM SHALL BE SUBMITTED SEPARATELY FOR DEFERRED PLAN CHECK AND PERMITTING.

M. FIRE ALARM DEVICES SHALL BE WHITE FINISH.

ABBREVIATIONS

(E)	EXISTING TO REMAIN
(F)	FUTURE
(R)	EXISTING TO BE REMOVED
(RL)	EXISTING TO BE RELOCATED
AB	ABOVE COUNTER BACKSPLASH
ACU	AIR CONDITIONING UNIT
AC	ALTERNATING CURRENT
A, AMP	AMPERES
AF	AMPERE (RATED) FUSE OR CB FRAME
AFF	ABOVE FINISHED FLOOR
AFG	ABOVE FINISHED GRADE
AIC	AVAILABLE INTERRUPTING CURRENT
AL	ALUMINUM (ALLOY)
ALC	AUTOMATIC LIGHTING CONTROL
ARS	AVAILABLE RMS SYMMETRY AMPERE
AS	AMPERE (RATED) SWITCH
AT	CIRCUIT BRKR TRIP SETTING (AMPS)
ATS	AUTOMATIC TRANSFER SWITCH
AUTO	AUTOMATIC
AUX	AUXILIARY
AWG	AMERICAN WIRE GAUGE
B	BELL (FIRE ALARM)
BAT	BATTERY
BG	BELOW GRADE
BRKR	CIRCUIT BREAKER
C	CONDUIT (CIRCULAR RACEWAY)
CAB	CABINET
CB	CIRCUIT BREAKER
CFM	CUBIC FEET PER MINUTE
CKT	CIRCUIT
CLG	CEILING
CO	CONDUIT ONLY
CPT	CONTROL POWER TRANSFORMER
CT	CURRENT TRANSFORMER
CU	COPPER
DC	DIRECT CURRENT
DISC	DISCONNECT
DIA	DIAMETER
DIV	DIVISION
DP	DISTRIBUTION PANEL
DPDT	DOUBLE POLE DOUBLE THROW
DPST	DOUBLE POLE SINGLE THROW
DWG	DRAWING
E,EMERG	EMERGENCY
EF	EXHAUST FAN
EMT	ELECTRICAL METALLIC TUBING
ENCL	ENCLOSURE
EO	ELECTRICALLY OPERATED
EOL	END OF LINE
EWC	ELECTRIC WATER COOLER
EWH	ELECTRIC WATER HEATER
FA	FIRE ALARM
FAA	FIRE ALARM ANNUNCIATOR
FAEP	FIRE ALARM EXTENDER PANEL
FF	FLUSH FLOOR MOUNTED
FLA	FULL LOAD AMPERES
FLEX	FLEXIBLE
FO	FIBER OPTIC
FPB	FAN POWERED BOX
FSD	FIRE/SMOKE DAMPER
FU	FUSE
GEN	GENERATOR
GFI	GROUND FAULT CIRCUIT INTERRUPTER
GND	GROUND
GRAP	GENERATOR REMOTE ANNUNCIATOR PNL
GRC	GALVANIZED RIGID STEEL CONDUIT
HLO	HANDLE LOCK-ON(OFF)
HP	HORSEPOWER
HPF	HIGH POWER FACTOR
HZ	HERTZ (CYCLES PER SECOND)
IER	INTEGRATED EQUIPMENT (SHORT CIRCUIT) RATING (RMS SYM. AMPS)
IES	ILLUMINATING ENGINEERING SOCIETY
IG	ISOLATED GROUND
IMC	INTERMEDIATE METAL CONDUIT
K	KEY OPERATED
KCMIL	THOUSAND CIRCULAR MILS
KO	KNOCK OUT
KW	KILOWATTS
KVA	KILOVOLT-AMPERES
LTG	LIGHTING
LCP	LIGHTING CONTROL PANEL
L	LENGTH
MAX	MAXIMUM
MCA	MINIMUM CIRCUIT AMPERES
MFR	MANUFACTURER
MIN	MINIMUM
MISC	MISCELLANEOUS
MLO	MAIN LUGS ONLY
MRS	MINIMUM RMS SYMMETRY AMPERE
MTD	MOUNTED
MTR	MOTOR
(N)	NEW
–N–	NEUTRAL (GROUNDED CONDUCTOR)
NC	NORMALLY CLOSED
NEC	NATIONAL ELECTRICAL CODE
–,NEG	NEGATIVE
NEMA	NATIONAL ELECTRICAL MFGR'S ASSOC.
NL	NIGHT LIGHT (UNSWITCHED)
NO	NORMALLY OPEN
NTS	NOT TO SCALE
OC	ON CENTER
OFCI	OWNER FURNISHED, CONTRACTOR INSTALLED
OFOI	OWNER FURNISHED, OWNER INSTALLED
OS	OCCUPANCY SENSOR
P	POLE
PB	PUSHBUTTON
PH, ø	PHASE
PNL	PANEL
+,POS	POSITIVE
PRI	PRIMARY
PT	POKE THRU
REQD	REQUIRED
RNC	RIGID NON-METALLIC CONDUIT (PVC)
RS	RAPID START
S.A.D.	SEE ARCHITECTURAL DRAWINGS
SEC	SECONDARY
SPDT	SINGLE POLE DOUBLE THROW
SPST	SINGLE POLE SINGLE THROW
SUB	SUBSTATION
SWBD	SWITCHBOARD
TB	TERMINAL BOARD
TDC	TIME DELAY CLOSING
TDO	TIME DELAY OPENING
TEL	TELEPHONE
TYP	TYPICAL
UL	UNDERWRITERS LAB
UON	UNLESS OTHERWISE NOTED
UPS	UNINTERRUPTIBLE POWER SUPPLY
UTP	UNSHIELDED TWISTED PAIR
V	VOLTS
VA	VOLT-AMPERES
VFD	VARIABLE FREQUENCY DRIVE
VD	VOLTAGE DROP
W	WATT
W/	WITH
W/O	WITHOUT
WP	WEATHERPROOF, SEE RECEPT. SYMBOL
XFMR	TRANSFORMER
XP	FIRE ALARM TRANSPONDER
", IN	INCHES
', FT	FEET
ø	PHASE
>	GREATER THAN
<	LESS THAN
≥	GREATER THAN OR EQUAL TO

ELECTRICAL DRAWING LIST

A-E000 ELECTRICAL LEAD SHEET
A-E001 ELECTRICAL SINGLE LINE DIAGRAM
A-E002 PANEL SCHEDULES

A-E100 EXISTING BUILDING EQUIPMENT PLAN
A-E101 MAIN/ORCHESTRA & BALCONY LEVEL POWER PLAN
A-E102 CROSS-AISLE LEVEL & ROOF POWER PLAN

A-E201 MAIN/ORCHESTRA & BALCONY LEVEL LIGHTING PLAN
A-E202 CROSS-AISLE LEVEL LIGHTING PLAN

A-E301 LIGHTING FIXTURE SCHEDULE & DETAILS
A-E302 ELECTRICAL TITLE 24 FORMS

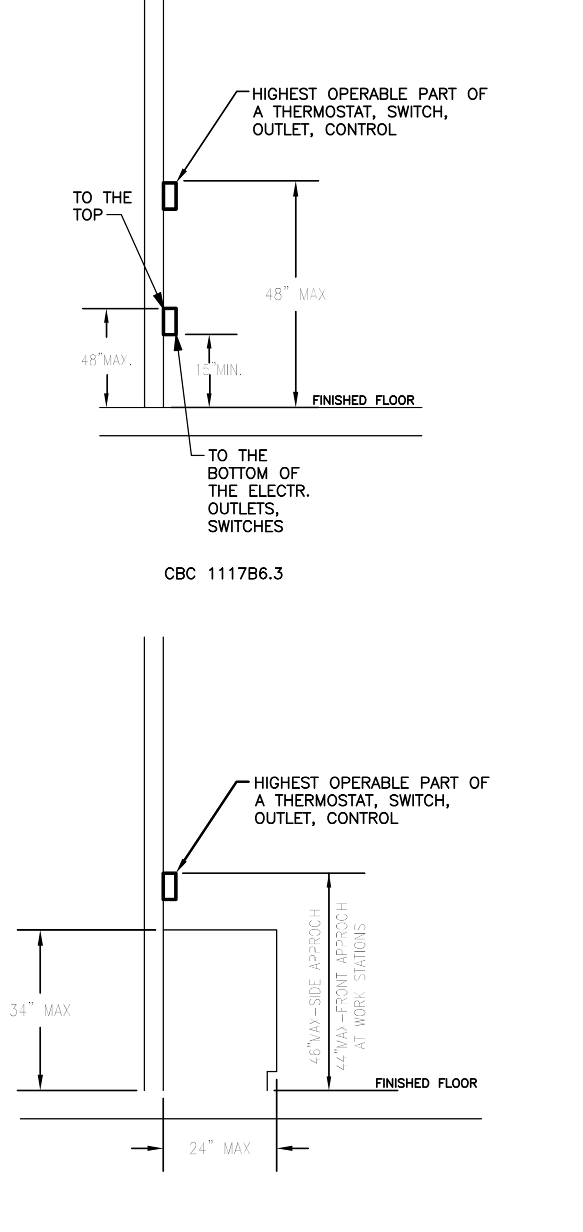

ADA MTG. HEIGHT & OVER OBSTRUCTION DETAIL | SCALE: NONE | 1

FIRE ALARM SYSTEM IS DESIGN BUILD. CONTRACTOR SHALL BE RESPONSIBLE FOR TAKING THE DRAWINGS TO THE BUILDING DEPARTMENT AND SUBMITTING DRAWINGS TO THE FIRE DEPARTMENT TO OBTAIN THE NECESSARY PERMIT.

BAYLEY CONSTRUCTION

Bayley Construction
3730 S. Susan St.
Suite 200
Santa Ana, CA. 92704
CA. License 734880
Tel 714-540-8863
Fax 714-556-8863

Bayley Construction
8005 S.E. 28th St.
P.O. Box 9004
Mercer Island, WA. 98040
WA. License
BAYLEC034JC
Tel 206-621-8884
Fax 206-343-7728

DLR Group WWCOT
Architecture Engineering Planning Interiors

4280 Latham Street, Suite H
Riverside, California 92501
T 951.682.0470
F 951.682.1801

wwcot.com
dlrgroup.com

Santa Monica
Sacramento
Riverside
Palm Springs
Modesto
Shanghai, China

Copyright © 2010, DLR Group Inc. of California
DBA DLR Group WWCOT, All Rights Reserved

GLUMAC
engineers for a sustainable future™
18200 Von Karman Ave., Suite 100
Irvine, CA 92612
T. 949.833.8190 F. 949.833.0252
Job No.: 04.10.00861
Contact: JM
www.glumac.com

Public Agency Submittal:
Issued for Bidding:
Issued for Construction:

Revisions:

REGISTERED PROFESSIONAL ENGINEER
JONATHAN MITSUMORI, P.E.
No. E10328
Exp. 9-30-12
ELECTRICAL
STATE OF CALIFORNIA

FOR CONSTRUCTION

Phase I
FOX ENTERTAINMENT PLAZA
3605 Market Street
Riverside, CA 92501

City of Riverside
CITY OF RIVERSIDE
3900 Main Street , Riverside, CA 92522

Phase: CD
Revised 02.10.11
DLR Group Project No.75-10603-00

Electrical Lead Sheet

Issued Date: 05.20.11
Drawn By: -
Checked By: -

A- E000
Sheet №

File Path & Name: G:\2010 - Jobs\04.10.00861\Fox Elevator Annex\Arch\2011-01-11\75-10603-00 Riv Parking Garage 7_Phase 1.rvt
© WWCOT 2009 -- Plotted 1/11/2011 2:24:38 PM

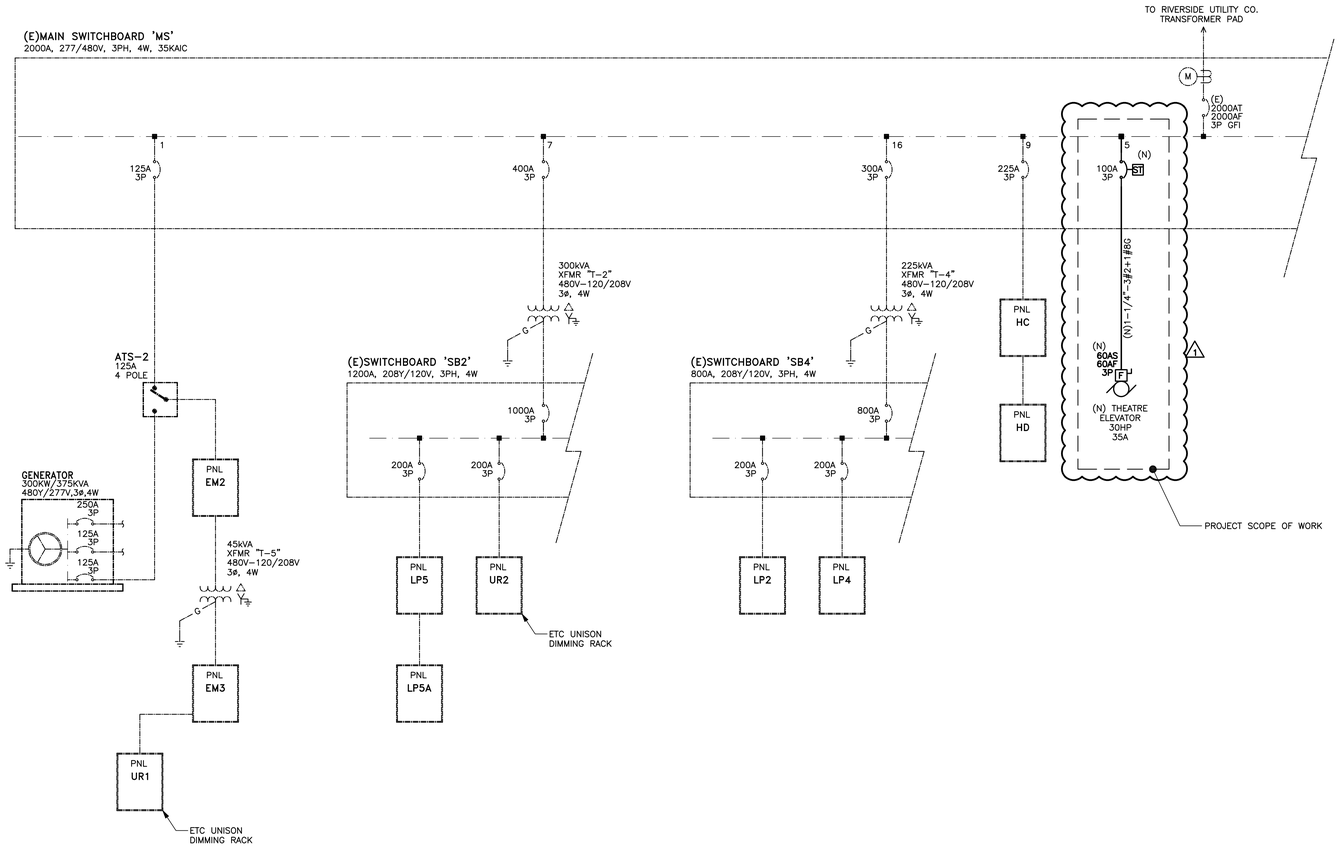

1 PARTIAL EXISTING SINGLE LINE DIAGRAM

SCALE: NONE

NOTES:

1. UNLESS OTHERWISE NOTED, ALL ELECTRICAL EQUIPMENT SHOWN ABOVE IS EXISTING TO REMAIN.

ELECTRICAL SINGLE LINE DIAGRAM

1

Bayley Construction
3730 S. Susan St.
Suite 200
Santa Ana, CA. 92704
CA. License 734880
Tel 714-540-8863
Fax 714-556-8863

Bayley Construction
8005 S.E. 28th St.
P.O. Box 9004
Mercer Island, WA. 98040
WA. License
BAYLEC034JC
Tel 206-621-8884
Fax 206-343-7728

DLR Group WWCOT
Architecture Engineering Planning Interiors

4280 Latham Street, Suite H
Riverside, California 92501
T 951.682.0470
F 951.682.1801

wwcot.com
dlrgroup.com

Santa Monica
Sacramento
Riverside
Palm Springs
Modesto
Shanghai, China

Copyright © 2010, DLR Group Inc. of California
DBA DLR Group WWCOT. All Rights Reserved

GLUMAC
engineers for a sustainable future
18200 Von Karman Ave., Suite 100
Irvine, CA 92612
T. 949.833.8190 F. 949.833.0252
Job No.: 04.10.00861
Contact: JM
www.glumac.com

Public Agency Submittal:
Issued for Bidding:
Issued for Construction:

Revisions:

1 9/29/2011 Coordination Changes

FOR CONSTRUCTION

REGISTERED PROFESSIONAL ENGINEER
JOHNSON MITSUMORI
No. E10328
Exp. 9-30-12
ELECTRICAL
STATE OF CALIFORNIA

Phase I
FOX ENTERTAINMENT PLAZA
3605 Market Street
Riverside, CA 92501

City of Riverside

CITY OF RIVERSIDE

3900 Main Street , Riverside, CA 92522

Phase: CD
Revised 02.10.11
DLR Group Project No.75-10603-00

Electrical Single Line Diagram

Issued Date: 05.20.11
Drawn By: -
Checked By: -

A- E001
Sheet №

File Path & Name: G:\2010 - Jobs\04.10.00861\Fox Elevator Annex\Arch\2011-01-11\75-10603-00 Riv Parking Garage 7_Phase 1.rvt
© WWCOT 2009 – Plotted 1/11/2011 2:24:38 PM

POLE NO.	C.B. AMP/P	SERVICE	LOAD KVA TOTAL	TYPE	A	B	C	TYPE	TOTAL	SERVICE	C.B. AMP/P	POLE No.
R 1	20/1	SPARE			0.03			L	0.03	EXIT SIGNS BAR AREA	20/1	2
3	20/1	EXIT SIGNS	0.30	L		0.30			0.00	BAR AREA SPARE	20/1	4
5	20/1	ELEVATOR LOBBY & STAIRWAY	0.19	L			0.81	L	0.62	BALC. FLEX SPACE	20/1	6
7	20/1	ELECTRICAL ROOM LIGHTS	0.12	L	9.45			M	9.33			8
9	20/1	SOUTH STAIRWAY	0.91	L		10.48		M	9.57	TRANSF T5 & PANEL EM3	70/3	10
11	20/1	SOUTH SIDE ENTRANCE	0.25	L			7.14	M	6.89			12
13	20/1	BALC. FLEX SPACE STAIR WAY	0.45	L	1.32			L	0.87	BALC. DRESSING RM. LTS	20/1	14
15	20/1	REAR PARKING WALL MTD. LTS.	0.53	L		1.15		L	0.62	BALC. DRESSING RM. LTS	20/1	16
17		SPACE					0.00			SPARE	20/1	18
19		SPACE			0.00					SPARE	20/1	20
21		SPACE				0.00				SPARE	20/1	22
23		SPACE					0.00			SPARE	20/1	24
25		SPACE			0.00					SPARE	20/1	26
27		SPACE				0.00				SPACE		28
29		SPACE					0.00			SPACE		30
31		SPACE			0.00					SPACE		32
33		SPACE				0.00				SPACE		34
35		SPACE					0.00			SPACE		36
37		SPACE			0.00					SPACE		38
39		SPACE				0.00				SPACE		40
41		SPACE					0.00			SPACE		42
CONNECTED LOAD PER PHASE					10.80	11.92	7.95					

LOAD SUMMARY	CONN. KVA	DEMAND FACTOR	DEMAND KVA
TYPE "L": CONTINUOUS LOADS	4.88	125%	6.10
TYPE "R": RECEPTACLES (FIRST 10KVA)	0.00	100%	0.00
TYPE "R": RECEPTACLES (OVER 10KVA)	0.00	50%	0.00
TYPE "M": MISCELLANEOUS LOADS	25.79	100%	25.79
TYPE "A": AC LOADS	0.00	100%	0.00
TYPE "K": KITCHEN LOADS	0.00	65%	0.00
LARGEST MOTOR LOAD		25%	0.00
TOTAL	30.67		31.89

EXISTING LOADS ARE ESTIMATED

VOLTS: 277/480V,3PH,4W
MAIN C.B.: M.L.O.
BUS: 125AMP
POLES: 42
MOUNTING: SURFACE
AIC RATING: EXISTING

DEMAND AMPS 38

PANEL **EM2** **(E)**

NOTES: N = NEW CIRCUIT BREAKER WITH NEW LOAD. R = EXISTING CIRCUIT BREAKER WITH REVISED LOAD. BLANK = EXISTING CIRCUIT BREAKER WITH NO REVISIONS

POLE NO.	C.B. AMP/P	SERVICE	LOAD KVA TOTAL	TYPE	A	B	C	TYPE	TOTAL	SERVICE	C.B. AMP/P	POLE No.
1	20/3	HP-11	1.55	S	3.60			A	2.05	HP-14	20/3	2
3			1.55	A		3.60		A	2.05			4
5			1.55	A			3.60	A	2.05			6
7	20/3	MISCELLANEOUS LOAD	3.16	M	6.09			A	2.93	HP-16	20/3	8
9			3.16	M		6.09		A	2.93			10
11			3.16	M			6.09	A	2.93			12
13	20/3	HP-13	1.80	A	2.74			A	0.94	EF-3	20/3	14
15			1.80	A		2.74		A	0.94			16
17			1.80	A			2.74	A	0.94			18
19	20/3	MISCELLANEOUS LOAD	2.93	M	12.82			A	9.88	PANEL 'HD'	125/3	20
21			2.93	M		12.82		A	9.88			22
23			2.93	M			12.82	A	9.88			24
25	20/3	HP-15	2.05	A	13.05			A	11.00	AC-1	60/3	26 N
27			2.05	A		13.05		A	11.00			28 N
29			2.05	A			13.05	A	11.00			30 N
31	20/1	SPARE			0.00					SPARE	20/1	32
33	20/1	SPARE				0.00				SPARE	20/1	34
35	20/1	SPARE					0.00			SPARE	20/1	36
37	20/1	SPARE			0.00					SPARE	20/1	38
39	20/1	SPARE				0.00				SPARE	20/1	40
41	20/1	SPARE					0.00			SPARE	20/1	42
CONNECTED LOAD PER PHASE					38.29	38.29	38.29					

LOAD SUMMARY	CONN. KVA	DEMAND FACTOR	DEMAND KVA
TYPE "L": CONTINUOUS LOADS	0.00	125%	0.00
TYPE "R": RECEPTACLES (FIRST 10KVA)	0.00	100%	0.00
TYPE "R": RECEPTACLES (OVER 10KVA)	0.00	50%	0.00
TYPE "M": MISCELLANEOUS LOADS	18.27	100%	18.27
TYPE "A": AC LOADS	95.05	100%	95.05
TYPE "K": KITCHEN LOADS	0.00	65%	0.00
LARGEST MOTOR LOAD		25%	0.00
TOTAL	114.87		113.32

EXISTING LOADS ARE ESTIMATED

VOLTS: 277/480V,3PH,4W
MAIN C.B.: M.L.O.
BUS: 225AMP
POLES: 42
MOUNTING: FLUSH
AIC RATING: EXISTING

DEMAND AMPS 136

PANEL **HC** **(E)**

NOTES: N = NEW CIRCUIT BREAKER WITH NEW LOAD. R = EXISTING CIRCUIT BREAKER WITH REVISED LOAD. BLANK = EXISTING CIRCUIT BREAKER WITH NO REVISIONS

POLE NO.	C.B. AMP/P	DIMMER SIZE (KW)	DIMMER TYPE	SERVICE	LOAD KVA TOTAL	TYPE	A	B	C	TYPE	TOTAL	SERVICE	DIMMER TYPE	DIMMER SIZE (KW)	C.B. AMP/P	POLE No.
1	20/1	2.4	INC	ORCH PIT LIGHT	0.60	L	0.78			L	0.18	STAGE BLUE STE LT	INC	2.4	20/1	2
3	20/1	2.4	F	ORCH SEATING AREA	0.31	L		0.31				SPACE				4
5	20/1	2.4	F	ORCH SEATING AREA	0.31	L			0.31			SPACE				6
7	20/1	2.4	INC	BAL OVERHEAD LTS	0.40	L	0.80			L	0.40	BAL SEAT END LTS	INC	2.4	20/1	8
9	20/1	2.4	INC	BAL SEAT END LTS	0.60	L		1.00		L	0.40	BAL STAIRS & ENTR	INC	2.4	20/1	10
11	20/1	2.4	INC	STAGE WORK LIGHT	0.56	L			1.34	L	0.78	AUD. FLOOR LED	INC	2.4	20/1	12
13	20/1	2.4	INC	BAL CEILING LTS.	0.40	L	1.60			L	1.20	BAL STAIRS & ENTR	INC	2.4	20/1	14
15	20/1	2.4	F	BAL CHANDELIER	0.39	L		0.39				SPACE				16
17	20/1	2.4	INC	BAL STAIRS	0.42	L			0.42			SPARE	INC	2.4	20/1	18
19	20/1	2.4	F	ORCH LOB CHANDELIER	1.25	L	1.25					SPACE				20
21	20/1	2.4	F	ENTRANCE CEIL. LTS.	0.42	L		1.12		L	0.70	ELEV. ANNEX DAY LT	F	2.4	20/1	22 N
23	20/1	2.4	F	BASEMENT STAIRS	0.16	L			0.66	L	0.50	ELEV. ANNEX	F	2.4	20/1	24 N
CONNECTED LOAD PER PHASE					4.42		2.82		2.72							

LOAD SUMMARY	CONN. KVA	DEMAND FACTOR	DEMAND KVA
TYPE "L": CONTINUOUS LOADS	9.97	125%	12.46
TYPE "R": RECEPTACLES (FIRST 10KVA)	0.00	100%	0.00
TYPE "R": RECEPTACLES (OVER 10KVA)	0.00	50%	0.00
TYPE "M": MISCELLANEOUS LOADS	0.00	100%	0.00
TYPE "A": AC LOADS	0.00	100%	0.00
TYPE "K": KITCHEN LOADS	0.00	65%	0.00
LARGEST MOTOR LOAD		25%	0.00
TOTAL	9.97		12.46

DIMMER TYPES
N = NEON
F = FLUORESCENT
LV = LOW VOLTAGE
FL = FLICKER
ND = NON DIMMED
INC = INCANDESCENT

EXISTING LOADS ARE ESTIMATED

VOLTS: 120/208V,3PH,4W
MAIN C.B.: M.L.O.
BUS: 200AMP
POLES: 24
MOUNTING: SURFACE
AIC RATING: EXISTING

DEMAND AMPS 35

PANEL **UR1** **(E)**

NOTES: N = NEW CIRCUIT BREAKER WITH NEW LOAD. R = EXISTING CIRCUIT BREAKER WITH REVISED LOAD. BLANK = EXISTING CIRCUIT BREAKER WITH NO REVISIONS

POLE NO.	C.B. AMP/P	SERVICE	LOAD KVA TOTAL	TYPE	A	B	C	TYPE	TOTAL	SERVICE	C.B. AMP/P	POLE No.
1	20/1	FUTURE BAR RECEPTACLE	0.36	R	0.72			R	0.36	RM 105 RECEPTACLES	20/1	2
3	20/1	FUTURE BAR RECEPTACLE	0.36	R		0.54		R	0.18	RM 105 RECEPTACLES	20/1	4
5	20/1	FUTURE BAR RECEPTACLE	0.36	R			0.84	M	0.48	RM 105 RECEPTACLES & LTG	20/1	6
7	20/1	FUTURE BAR RECEPTACLE	0.36	R	0.54			R	0.18	SEATING & LOBBY RECEPTACLES	20/1	8
9	20/1	FUTURE BAR RECEPTACLE	0.36	R		0.54		R	0.18	LOBBY NORTH WALL RECEPTACLES	20/1	10
11	20/1	FUTURE BAR RECEPTACLE	0.36	R			0.54	R	0.18	RESTROOM GFI	20/1	12
13	20/1	SEATING AREA RECEPTACLE	0.36	R	0.90			R	0.54	BAR AREA RECEPTACLE	20/1	14
15	20/1	SEATING AREA RECEPTACLE	0.36	R		0.54		R	0.18	BASEMENT RESTROOM GFI	20/1	16
17	20/2	BASEMENT RESTROOM	0.74	L			1.28	R	0.54	BASEMENT RECEPTACLES	20/1	18
19			0.79	L	0.97			R	0.18	BASEMENT RESTROOM GFI	20/1	20
R 21	20/1	ELEVATOR PIT	0.25	M		0.75		L	0.50	ORCH. WOMEN RESTROOM	20/1	22
1 R 23	20/1	ELEVATOR MACHINE RM.	0.25	M			1.51	R	1.26	ELEVATOR ANNEX	20/1	24 R
R 25	20/1	ELEVATOR CONTROL	0.50	M	1.25			M	0.75	WHEELCHAIR LIFT	30/2	26 N
R 27	20/1	ELEVATOR ANNEX RECEPTACLE	0.72	R		1.47		M	0.75			28 N
1 R 29	20/1	ELEVATOR ANNEX RECEPTACLE / CDP-1	1.31	R			1.31			SPARE	20/1	30
A 31		SPACE			0.00					SPACE		32
33		SPACE				0.00				SPACE		34
35		SPACE					0.00			SPACE		36
37		SPACE			0.00					SPACE		38
39		SPACE				0.00				SPACE		40
41		SPACE					0.00			SPACE		42
CONNECTED LOAD PER PHASE					4.38	3.84	5.49					

LOAD SUMMARY	CONN. KVA	DEMAND FACTOR	DEMAND KVA
TYPE "L": CONTINUOUS LOADS	2.03	125%	2.54
TYPE "R": RECEPTACLES (FIRST 10KVA)	8.69	100%	8.69
TYPE "R": RECEPTACLES (OVER 10KVA)	0.00	50%	0.00
TYPE "M": MISCELLANEOUS LOADS	2.98	100%	2.98
TYPE "A": AC LOADS	0.00	100%	0.00
TYPE "K": KITCHEN LOADS	0.00	65%	0.00
LARGEST MOTOR LOAD		25%	0.00
TOTAL	13.71		14.22

EXISTING LOADS ARE ESTIMATED

VOLTS: 120/208V,3PH,4W
MAIN C.B.: M.L.O.
BUS: 225AMPS
POLES: 42
MOUNTING: FLUSH
AIC RATING: EXISTING

DEMAND AMPS 39

PANEL **LP2** **(E)**

NOTES: N = NEW CIRCUIT BREAKER WITH NEW LOAD. R = EXISTING CIRCUIT BREAKER WITH REVISED LOAD. BLANK = EXISTING CIRCUIT BREAKER WITH NO REVISIONS
(1) = PROVIDE BREAKER HANDLE TIE

POLE NO.	C.B. AMP/P	DIMMER SIZE (KW)	DIMMER TYPE	SERVICE	LOAD KVA TOTAL	TYPE	A	B	C	TYPE	TOTAL	SERVICE	DIMMER TYPE	DIMMER SIZE (KW)	C.B. AMP/P	POLE No.
1	20/1	2.4	INC	ORCH. PIT DIM REC	0.90	L	1.10			L	0.20	BASEMENT SPOT LTS.	INC	2.4	20/1	2
3	20/1	2.4	F	ORCH LOBBY	0.26	L		0.26				SPARE	–	2.4	20/1	4
5	20/1	2.4	INC	BASEMENT SCONE	0.30	L			1.10	L	0.80	LOBBY UP LIGHT	INC	2.4	20/1	6
7	20/1	2.4	INC	ORCH COLOR SPOT	0.55	L	0.83			L	0.28	LOBBY UP LIGHT	INC	2.4	20/1	8
9	20/1	2.4	F	BASEMENT SCONE	0.21	L		0.96		L	0.75	ELEV. ANNEX DAY LIGHT	F	2.4	20/1	10 N
11	20/1	2.4	INC	BAL OVERHEAD LTS.	0.28	L			1.48	L	1.20	BAL OVERHEAT LTS.	INC	2.4	20/1	12
13	20/1	2.4	INC	BASEMENT QUARTZ LT.	0.80	L	1.60			L	0.80	BAL LOBBY UP LIGHT	INC	2.4	20/1	14
15	20/1	2.4	INC	BASEMENT PAR 30 LTS	0.28	L		0.56		L	0.28	BAL LOBBY UP LIGHT	INC	2.4	20/1	16
17	20/1	2.4	F	BAL LOBBY SCONCE	0.05	L			0.75	L	0.70	ELEV. ANNEX	F	2.4	20/1	18 N
19	20/1	2.4	INC	FRONT ENTRANCE LTS.	0.42	L	0.42					SPARE	INC	2.4	20/1	20
21	20/1	2.4	INC	WHITE RUN. LTS	0.84	L		1.99		L	1.15	FRONT SEATING AREA	INC	2.4	20/1	22
23	20/1	2.4	INC	BLUE RUNNING LIGHT	0.84	L			2.57	L	1.73	FRONT SEATING AREA	INC	2.4	20/1	24
CONNECTED LOAD PER PHASE					3.95		3.77		5.90							

LOAD SUMMARY	CONN. KVA	DEMAND FACTOR	DEMAND KVA
TYPE "L": CONTINUOUS LOADS	13.61	125%	17.02
TYPE "R": RECEPTACLES (FIRST 10KVA)	0.00	100%	0.00
TYPE "R": RECEPTACLES (OVER 10KVA)	0.00	50%	0.00
TYPE "M": MISCELLANEOUS LOADS	0.00	100%	0.00
TYPE "A": AC LOADS	0.00	100%	0.00
TYPE "K": KITCHEN LOADS	0.00	65%	0.00
LARGEST MOTOR LOAD		25%	0.00
TOTAL	13.61		17.02

DIMMER TYPES
N = NEON
F = FLUORESCENT
LV = LOW VOLTAGE
FL = FLICKER
ND = NON DIMMED
INC = INCANDESCENT

EXISTING LOADS ARE ESTIMATED

VOLTS: 120/208V,3PH,4W
MAIN C.B.: M.L.O.
BUS: 200AMP
POLES: 24
MOUNTING: SURFACE
AIC RATING: EXISTING

DEMAND AMPS 47

PANEL **UR2** **(E)**

NOTES: N = NEW CIRCUIT BREAKER WITH NEW LOAD. R = EXISTING CIRCUIT BREAKER WITH REVISED LOAD. BLANK = EXISTING CIRCUIT BREAKER WITH NO REVISIONS

POLE NO.	C.B. AMP/P	SERVICE	LOAD KVA TOTAL	TYPE	A	B	C	TYPE	TOTAL	SERVICE	C.B. AMP/P	POLE No.
1	20/2	LOBBY CONCESSION RECEPTACLES	0.36	M	0.54			R	0.18	LOBBY CONCESSION RECEPTACLES	20/1	2
3			0.18	M		0.36		R	0.18	LOBBY CONCESSION RECEPTACLES	20/1	4
5	20/1	LOBBY CONCESSION RECEPTACLES	0.18	R			0.36	R	0.18	LOBBY CONCESSION RECEPTACLES	20/1	6
7	20/1	STORAGE/LOBBY RECEPTACLES	0.54	R	1.02			M	0.48	TELEPHONE/PA ROOM	20/1	8
9	20/1	STORAGE/LOBBY RECEPTACLES	0.54	R		0.90		R	0.36	TELEPHONE/PA ROOM	20/1	10
11	20/1	MEN RESTROOM GFI	0.18	R			0.72	R	0.54	RM 237,244 RECEPTACLES	20/1	12
13	20/1	RM 244 RECEPTACLES	0.36	R	0.72			R	0.36	RM 237,244 RECEPTACLES	20/1	14
15	20/1	WOMEN RESTROOM GFI	0.54	R		0.90		R	0.36	RM 237,244 RECEPTACLES	20/1	16
17	20/1	HALLWAY RM 244 RECEPTACLES	0.54	R			1.08	R	0.54	RM 236 RECEPTACLES	20/1	18
19	20/1	BAL SEATING AREA RECEPTACLES	0.36	R	0.72			R	0.36	RM 236 RECEPTACLES	20/1	20
21	20/1	BAL SEATING AREA RECEPTACLES	0.18	R		0.54		R	0.36	RM 233 RECEPTACLES	20/1	22
23	20/1	BAL SEATING AREA RECEPTACLES	0.18	R			0.54	R	0.36	RM 233 RECEPTACLES	20/1	24
25	20/1	BAL SEATING AREA RECEPTACLES	0.60	M	0.78			R	0.18	RM 233 RECEPTACLES	20/1	26
27	20/1	BAL SEATING AREA RECEPTACLES	0.60	M		1.10		M	0.50	WATER HEATER GWH-2	20/1	28
29	20/1	BAL SEATING AREA RECEPTACLES	0.60	M			1.20	M	0.60	BAL SEATING AREA RECEPTACLES	20/2	30
31	20/1	BAL SEATING AREA RECEPTACLES	0.60	M	1.20			M	0.60			32
33	20/1	BAL SEATING AREA RECEPTACLES	0.36	R		0.96		M	0.60	BAL SEATING AREA RECEPTACLES	20/2	34
35	20/1	RESTROOM LIGHTS	1.12	L			1.72	M	0.60			36
37	20/2	HP-17	1.50	A	1.84			L	0.34	RM 236 SCONCE/CEILING LTS.	20/1	38
39			1.50	A		2.85		A	1.35	CU-1	15/2	40 N
R 41	20/1	ELEVATOR ANNEX & ROOF REC.	1.08	R			2.43	A	1.35			42 N
CONNECTED LOAD PER PHASE					6.82	7.61	8.05					

LOAD SUMMARY	CONN. KVA	DEMAND FACTOR	DEMAND KVA
TYPE "L": CONTINUOUS LOADS	1.45	125%	1.82
TYPE "R": RECEPTACLES (FIRST 10KVA)	9.00	100%	9.00
TYPE "R": RECEPTACLES (OVER 10KVA)	0.00	50%	0.00
TYPE "M": MISCELLANEOUS LOADS	6.32	100%	6.32
TYPE "A": AC LOADS	5.70	100%	5.70
TYPE "K": KITCHEN LOADS	0.00	65%	0.00
LARGEST MOTOR LOAD		25%	0.00
TOTAL	22.48		22.84

EXISTING LOADS ARE ESTIMATED

VOLTS: 120/208V,3PH,4W
MAIN C.B.: M.L.O.
BUS: 225AMPS
POLES: 42
MOUNTING: FLUSH
AIC RATING: EXISTING

DEMAND AMPS 63

PANEL **LP4** **(E)**

NOTES: N = NEW CIRCUIT BREAKER WITH NEW LOAD. R = EXISTING CIRCUIT BREAKER WITH REVISED LOAD. BLANK = EXISTING CIRCUIT BREAKER WITH NO REVISIONS

File Path & Name: G:\2010 - Jobs\04.10.00861\Fox Elevator Annex\Arch\2011-01-11\75-10603-00 Riv Parking Garage 7_Phase 1.rvt
© WWCOT 2009 – Plotted 1/11/2011 2:24:38 PM

ELECTRICAL SINGLE LINE DIAGRAM

1

BAYLEY CONSTRUCTION
Bayley Construction
3730 S. Susan St.
Suite 200
Santa Ana, CA, 92704
CA. License 734880
Tel 714-540-8863
Fax 714-556-8863

Bayley Construction
8005 S.E. 28th St.
P.O. Box 9004
Mercer Island, WA, 98040
WA. License
BAYLEC034JC
Tel 206-621-8884
Fax 206-343-7728

DLR Group WWCOT
Architecture Engineering Planning Interiors

4280 Latham Street, Suite H
Riverside, California 92501
T 951.682.0470
F 951.682.1801

wwcot.com
dlrgroup.com

Santa Monica
Sacramento
Riverside
Palm Springs
Modesto
Shanghai, China

Copyright © 2010, DLR Group Inc. of California
DBA DLR Group WWCOT. All Rights Reserved

GLUMAC
engineers for a sustainable future
18200 Von Karman Ave., Suite 100
Irvine, CA 92612
T. 949.833.8190 F. 949.833.0252
Job No.: 04.10.00861
Contact: JM
www.glumac.com

Public Agency Submittal:
Issued for Bidding:
Issued for Construction:

Revisions:

FOR CONSTRUCTION

ARCHITECTS PROFESSIONAL ENGINEERS
JONATHAN WATSUMORI
No. E10328
Exp. 9-30-12
ELECTRICAL
STATE OF CALIFORNIA

Phase I
FOX
ENTERTAINMENT
PLAZA
3605 Market Street
Riverside, CA 92501

City of Riverside

CITY OF RIVERSIDE

3900 Main Street , Riverside, CA 92522

Phase: CD
Revised 02.10.11
DLR Group Project No.75-10603-00

Panel Schedules

Issued Date: 05.20.11
Drawn By: -
Checked By: -

A- E002

Sheet №

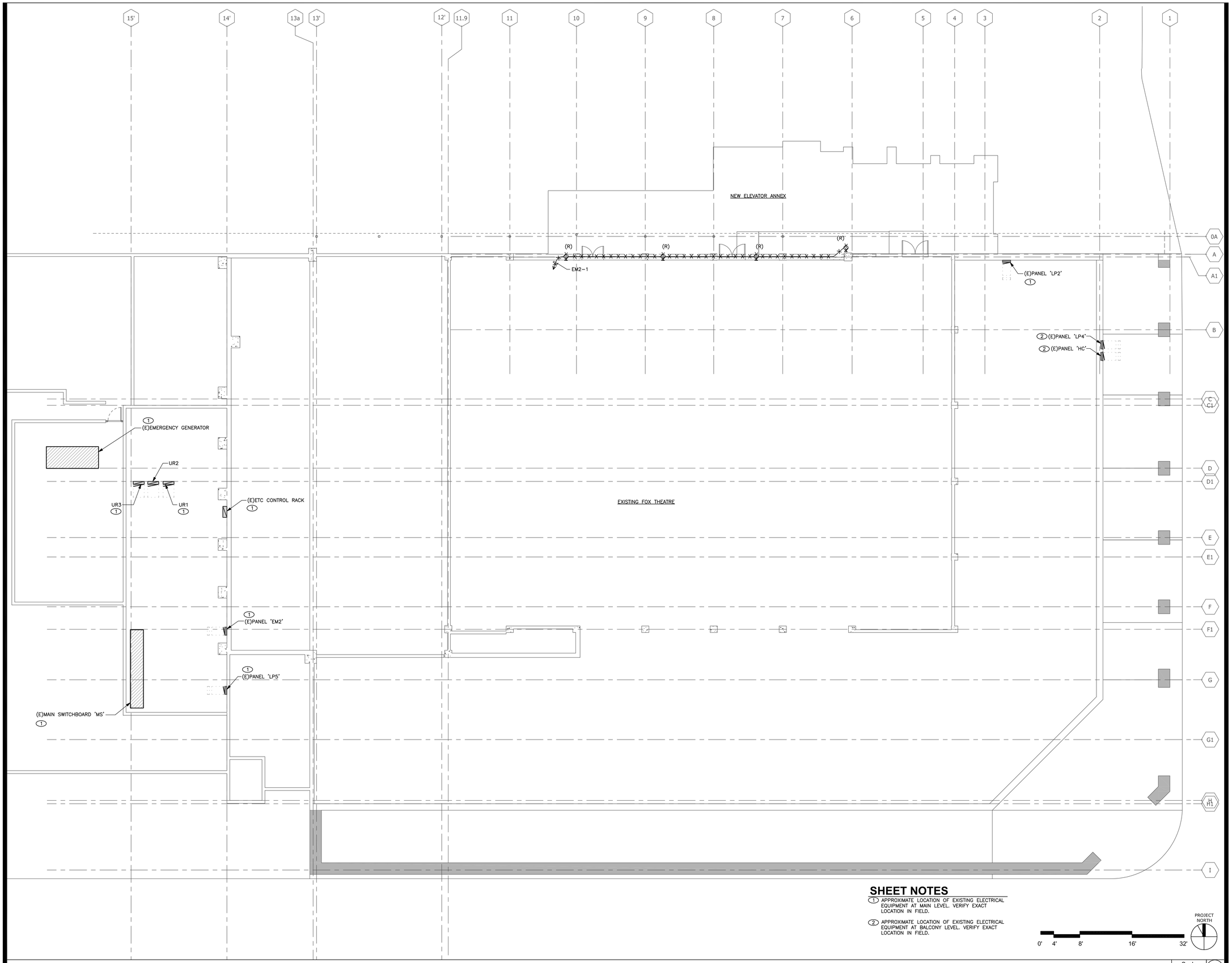

SHEET NOTES

1. APPROXIMATE LOCATION OF EXISTING ELECTRICAL EQUIPMENT AT MAIN LEVEL. VERIFY EXACT LOCATION IN FIELD.
2. APPROXIMATE LOCATION OF EXISTING ELECTRICAL EQUIPMENT AT BALCONY LEVEL. VERIFY EXACT LOCATION IN FIELD.

PROJECT NORTH

0' 4' 8' 16' 32'

EXISTING MAIN / ORCHESTRA LEVEL FLOOR PLAN - ELECTRICAL

Scale 1/8"= 1'-0" 1

Bayley Construction
3730 S. Susan St.
Suite 200
Santa Ana, CA. 92704
CA. License 734880
Tel 714-540-8863
Fax 714-556-8863

Bayley Construction
8005 S.E. 28th St.
P.O. Box 9004
Mercer Island, WA. 98040
WA. License
BAYLEC034JC
Tel 206-621-8884
Fax 206-343-7728

DLR Group WWCOT
Architecture Engineering Planning Interiors

4280 Latham Street, Suite H
Riverside, California 92501
T 951.682.0470
F 951.682.1801

wwcot.com
dlrgroup.com

Santa Monica
Sacramento
Riverside
Palm Springs
Modesto
Shanghai, China

Copyright © 2010, DLR Group Inc. of California
DBA DLR Group WWCOT. All Rights Reserved

GLUMAC
engineers for a sustainable future

18200 Von Karman Ave., Suite 100
Irvine, CA 92612
T. 949.833.8190 F. 949.833.0252

Job No.: 04.10.00861
Contact: JM
www.glumac.com

Public Agency Submittal:
Issued for Bidding:
Issued for Construction:

Revisions:

FOR CONSTRUCTION

REGISTERED PROFESSIONAL ENGINEER
JOHNSON MATSUMOTO
No. E10328
Exp. 9-30-12
ELECTRICAL
STATE OF CALIFORNIA

Phase I FOX ENTERTAINMENT PLAZA

3605 Market Street
Riverside, CA 92501

City of Riverside

CITY OF RIVERSIDE

3900 Main Street , Riverside, CA 92522

Phase: CD
Revised 02.10.11
DLR Group Project No.75-10603-00

Existing Building Equipment Plan

Issued Date: 05.20.11
Drawn By: -
Checked By: -

A- E100

Sheet №

File Path & Name: G:\2010 - Jobs\04.10.00861\Fox Elevator Annex\Arch\2011-01-11\75-10603-00 Riv Parking Garage 7_Phase 1.rvt
© WWCOT 2009 – Plotted 1/11/2011 2:24:38 PM

SHEET NOTES

1. WHEELCHAIR LIFT. COORDINATE INSTALLATION PER MANUFACTURER INSTRUCTIONS.

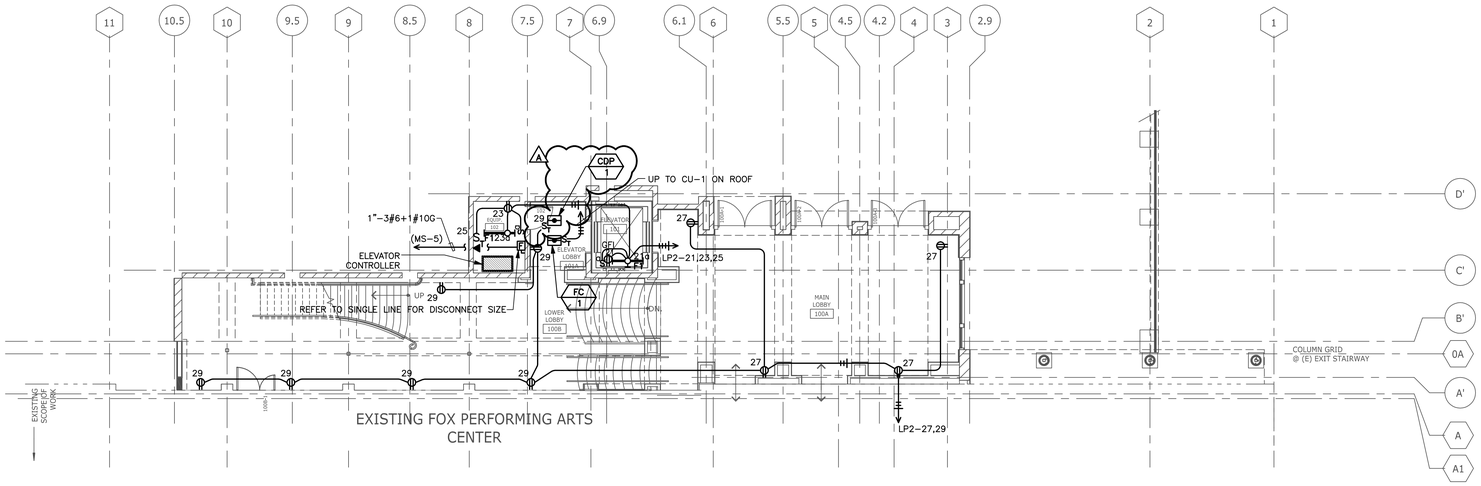

PROJECT NORTH

0' 4' 8' 16' 32'

MAIN / ORCHESTRA LEVEL FLOOR PLAN - ELECTRICAL

Scale 1/8"= 1'-0" (1)

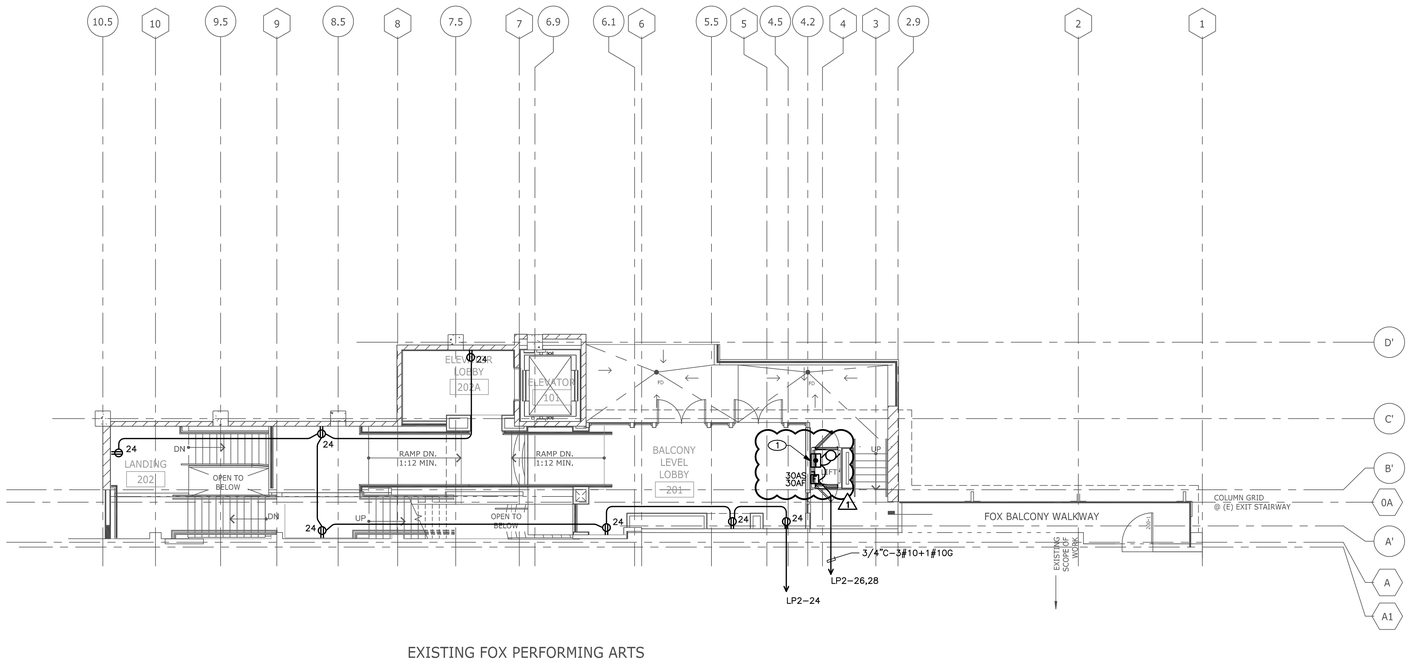

PROJECT NORTH

0' 4' 8' 16' 32'

BALCONY LEVEL FLOOR PLAN - ELECTRICAL

Scale 1/8"= 1'-0" (2)

Bayley Construction
3730 S. Susan St.
Suite 200
Santa Ana, CA. 92704
CA. License 734880
Tel 714-540-8863
Fax 714-556-8863

Bayley Construction
8005 S.E. 28th St.
P.O. Box 9004
Mercer Island, WA. 98040
WA. License
BAYLEC034JC
Tel 206-621-8884
Fax 206-343-7728

BAYLEY CONSTRUCTION

DLR Group WWCOT
Architecture Engineering Planning Interiors

4280 Latham Street, Suite H
Riverside, California 92501
T 951.682.0470
F 951.682.1801

wwcot.com
dlrgroup.com

Santa Monica
Sacramento
Riverside
Palm Springs
Modesto
Shanghai, China

Copyright © 2010, DLR Group Inc. of California
DBA DLR Group WWCOT. All Rights Reserved

GLUMAC
engineers for a sustainable future

18200 Von Karman Ave., Suite 100
Irvine, CA 92612
T. 949.833.8190 F. 949.833.0252

Job No.: 04.10.00861
Contact: JM
www.glumac.com

Public Agency Submittal:
Issued for Bidding:
Issued for Construction:

Revisions:

#		
1	9/29/2011	Coordination Changes

FOR CONSTRUCTION

REGISTERED PROFESSIONAL ENGINEER
JOHN WITSMORE
No. E10328
Exp. 9-30-12
ELECTRICAL
STATE OF CALIFORNIA

Phase I
FOX
ENTERTAINMENT
PLAZA
3605 Market Street
Riverside, CA 92501

City of Riverside

CITY OF RIVERSIDE

3900 Main Street , Riverside, CA 92522

Phase: CD
Revised 02.10.11
DLR Group Project No.75-10603-00

Main/Orchestra &
Balcony Level
Power Plan

Issued Date: 05.20.11
Drawn By: -
Checked By: -

A- E101

Sheet №

File Path & Name: G:\2010 - Jobs\04.10.00861\Fox Elevator Annex\Arch\2011-01-11\75-10603-00 Riv Parking Garage 7_Phase I.rvt
© WWCOT 2009 -- Plotted: 1/11/2011 2:24:38 PM

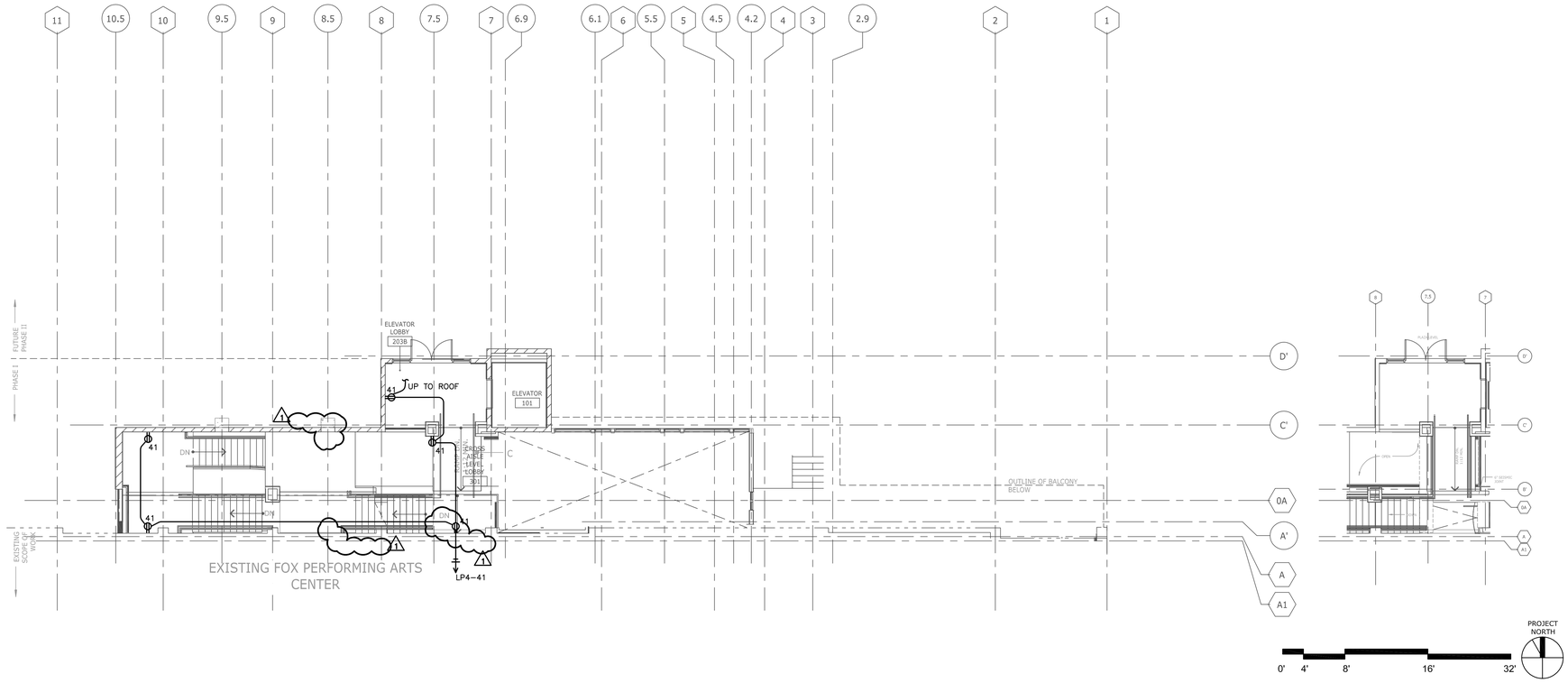

CROSS-AISLE LEVEL FLOOR PLAN - ELECTRICAL

Scale 1/8"= 1'-0" (1)

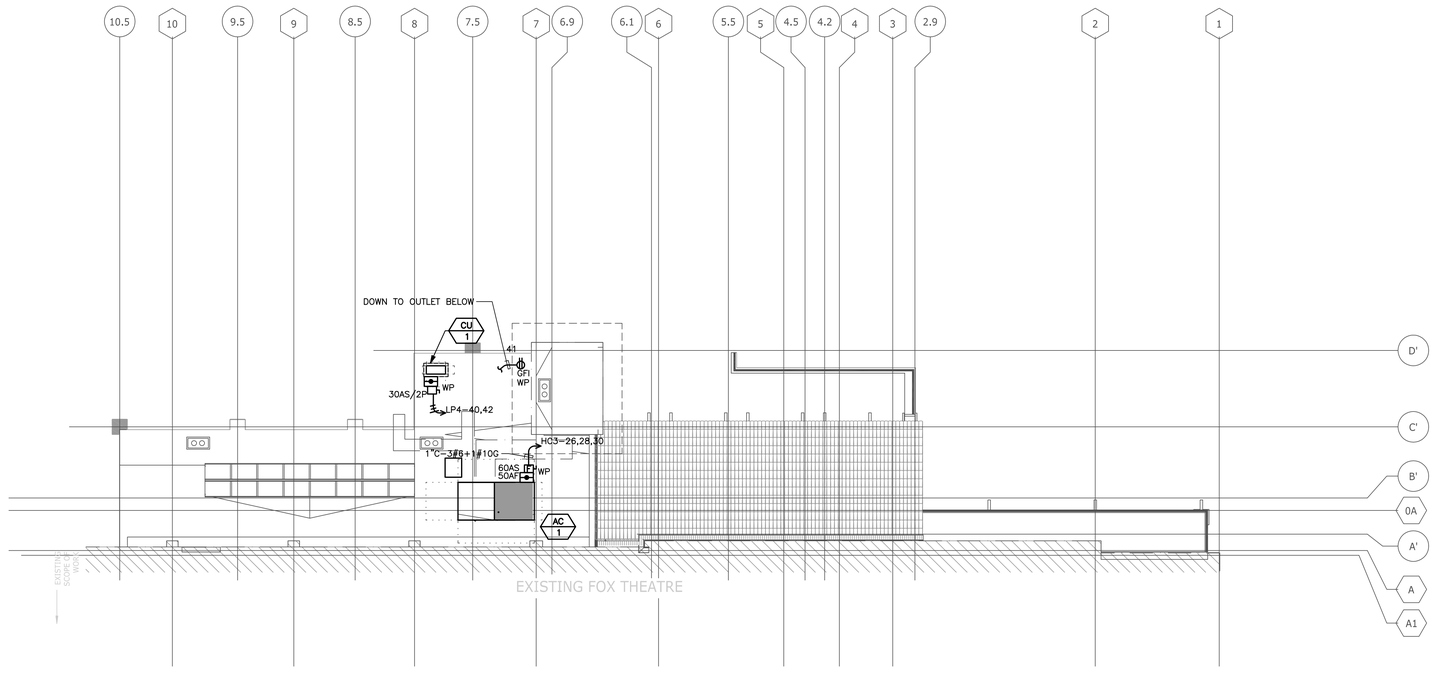

ROOF PLAN - ELECTRICAL

Scale 1/8"= 1'-0" (2)

Bayley Construction
3730 S. Susan St.
Suite 200
Santa Ana, CA, 92704
CA. License 734880
Tel 714-540-8863
Fax 714-556-8863

Bayley Construction
8005 S.E. 28th St.
P.O. Box 9004
Mercer Island, WA. 98040
WA. License
BAYLEC034JC
Tel 206-621-8884
Fax 206-343-7728

DLR Group WWCOT
Architecture Engineering Planning Interiors

4280 Latham Street, Suite H
Riverside, California 92501
T 951.682.0470
F 951.682.1801

wwcot.com
dlrgroup.com

Santa Monica
Sacramento
Riverside
Palm Springs
Modesto
Shanghai, China

Copyright © 2010, DLR Group Inc. of California
DBA DLR Group WWCOT. All Rights Reserved

GLUMAC
engineers for a sustainable future
18200 Von Karman Ave., Suite 100
Irvine, CA 92612
T. 949.833.8190 F. 949.833.0252
Job No.: 04.10.00861
Contact: JM
www.glumac.com

Public Agency Submittal:
Issued for Bidding:
Issued for Construction:

Revisions:

FOR CONSTRUCTION

REGISTERED PROFESSIONAL ENGINEER
JOHANNAN WITSCHORIK
No. E10328
Exp. 9-30-12
ELECTRICAL
STATE OF CALIFORNIA

Phase I FOX ENTERTAINMENT PLAZA

3605 Market Street
Riverside, CA 92501

City of Riverside

CITY OF RIVERSIDE

3900 Main Street , Riverside, CA 92522

Phase: CD
Revised 02.10.11
DLR Group Project No.75-10603-00

Cross-Aisle Level & Roof Power Plan

Issued Date: 05.20.11
Drawn By: -
Checked By: -

A- E102

Sheet №

File Path & Name: G:\2010 - Jobs\04.10.00861\Fox Elevator Annex\Arch\2011-01-11\75-10603-00 Riv Parking Garage 7_Phase I.rvt
© WWCOT 2009 -- Plotted 1/11/2011 2:24:38 PM

SHEET NOTES

1. UP TO FIXTURE AT 1/A–E202.
2. UP TO FIXTURE AT 2/A–E201.
3. DOWN TO FIXTURE AT 1/A–E201.
4. CONNECT TO EXISTING ETC CONTROLLER.
5. CONNECT TO SPARE CIRCUIT IN (E)LP5A. CONTROL BY EXISTING ETC EXTERIOR RELAY AND PHOTOCELL.

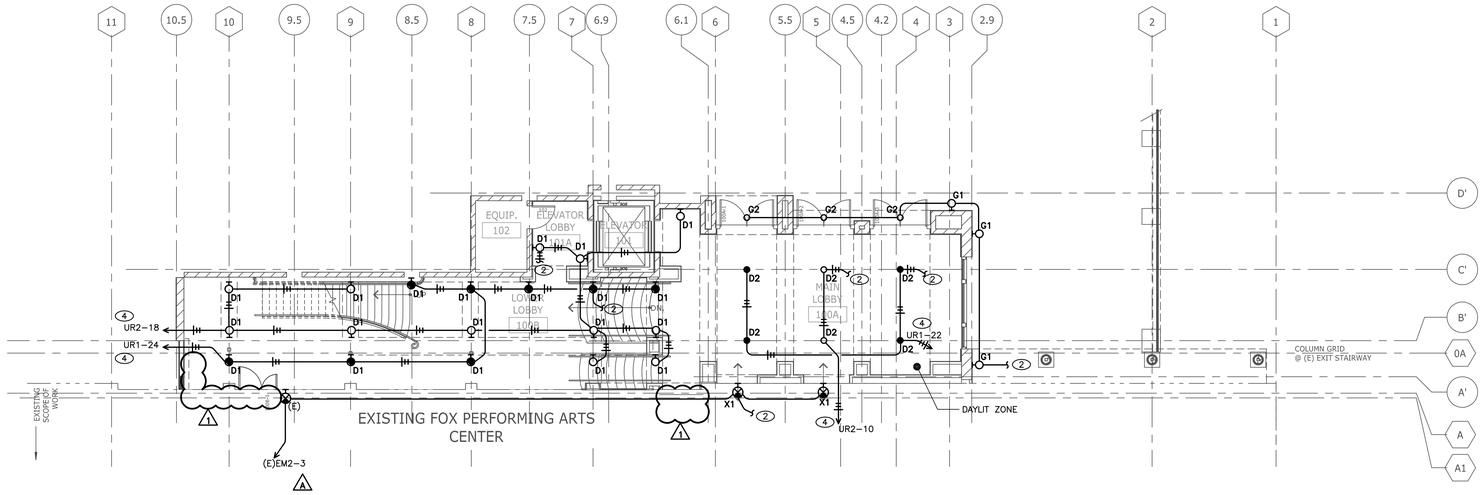

PROJECT NORTH

0' 4' 8' 16' 32'

MAIN / ORCHESTRA LEVEL LIGHTING PLAN

Scale 1/8"= 1'-0" (1)

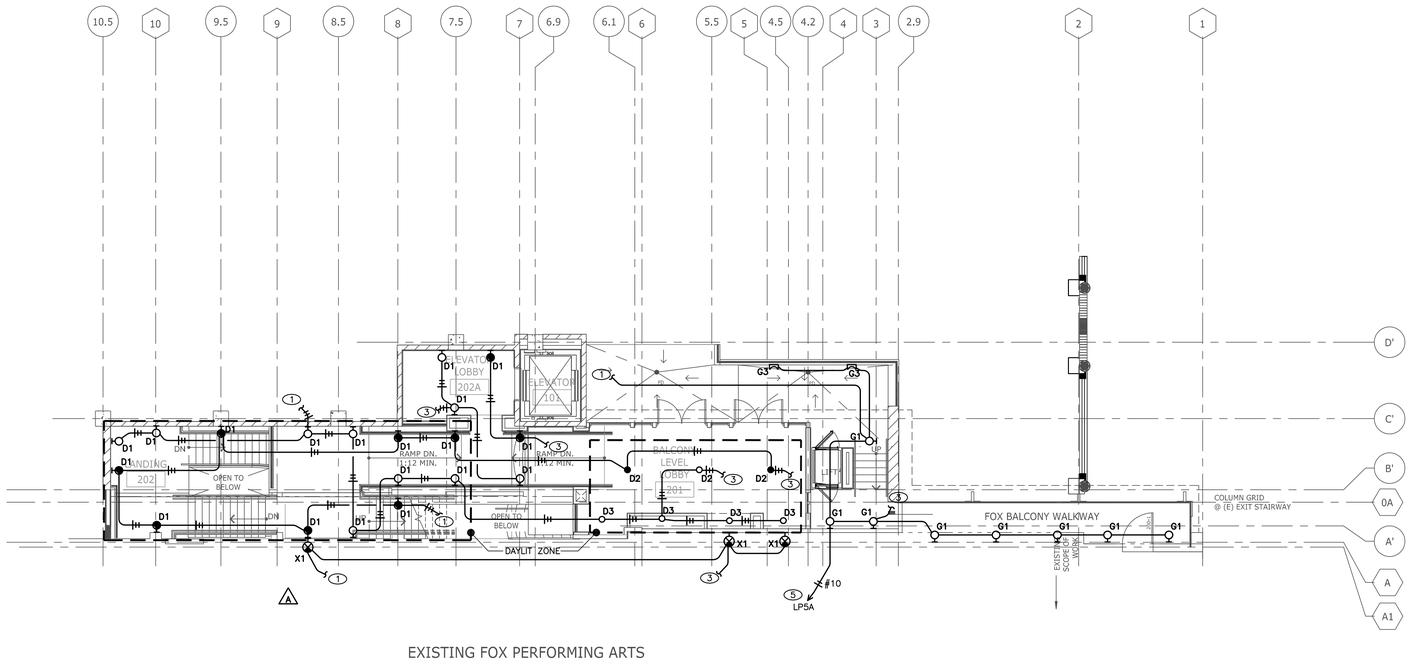

PROJECT NORTH

0' 4' 8' 16' 32'

BALCONY LEVEL LIGHTING PLAN

Scale 1/8"= 1'-0" (2)

Bayley Construction
3730 S. Susan St.
Suite 200
Santa Ana, CA. 92704
CA. License 734880
Tel 714-540-8863
Fax 714-556-8863

Bayley Construction
8005 S.E. 28th St.
P.O. Box 9004
Mercer Island, WA. 98040
WA. License
BAYLEC034JC
Tel 206-621-8884
Fax 206-343-7728

DLR Group WWCOT
Architecture Engineering Planning Interiors

4280 Latham Street, Suite H
Riverside, California 92501
T 951.682.0470
F 951.682.1801

wwcot.com
dlrgroup.com

Santa Monica
Sacramento
Riverside
Palm Springs
Modesto
Shanghai, China

Copyright © 2010, DLR Group Inc. of California
DBA DLR Group WWCOT. All Rights Reserved

GLUMAC
engineers for a sustainable future™
18200 Von Karman Ave., Suite 100
Irvine, CA 92612
T. 949.833.8190 F. 949.833.0252
Job No.: 04.10.00861
Contact: JM
www.glumac.com

Public Agency Submittal:
Issued for Bidding:
Issued for Construction:

Revisions:

#		
A	4/8/2011	Owner Changes
1	9/29/2011	Coordination Changes

FOR CONSTRUCTION

REGISTERED PROFESSIONAL ENGINEER
JOHNSON WITSOMBORN LEE
No. E10328
Exp. 9-30-12
ELECTRICAL
STATE OF CALIFORNIA

Phase I
FOX
ENTERTAINMENT
PLAZA
3605 Market Street
Riverside, CA 92501

City of Riverside

CITY OF RIVERSIDE

3900 Main Street , Riverside, CA 92522

Phase: CD
Revised 02.10.11
DLR Group Project No.75-10603-00

Main/Orchestra &
Balcony Level Lighting
Plan

Issued Date: 05.20.11
Drawn By: -
Checked By: -

A- E201

Sheet №

File Path & Name: G:\2010 - Jobs\04.10.00861\Fox Elevator Annex\Arch\2011-01-11\75-10603-00 Riv Parking Garage 7_Phase I.rvt
© WWCOT 2009 -- Plotted: 1/11/2011 2:24:38 PM

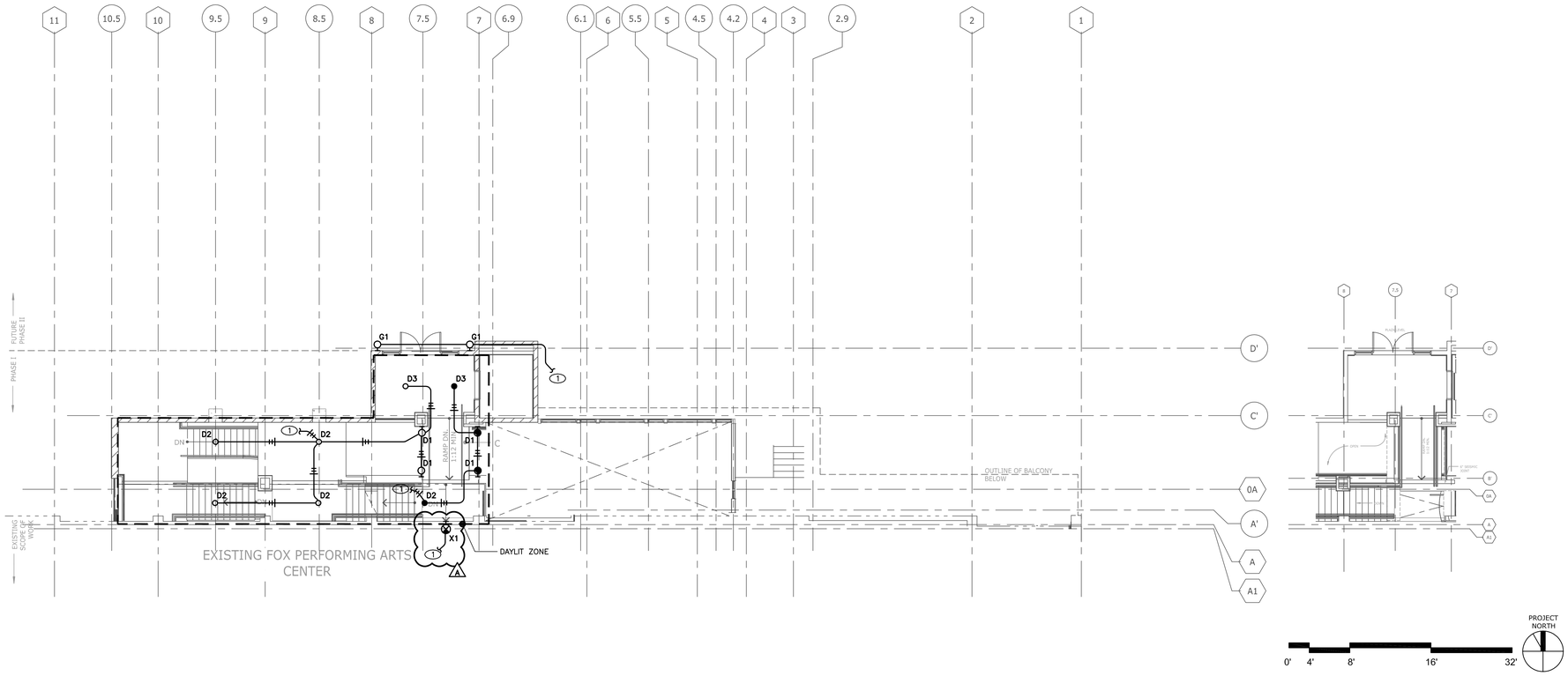

CROSS-AISLE LEVEL LIGHTING PLAN

Scale 1/8"= 1'-0" (1)

SHEET NOTES

(1) DOWN TO FIXTURES AT 2/A-E201.

Bayley Construction
3730 S. Susan St.
Suite 200
Santa Ana, CA. 92704
CA. License 734880
Tel 714-540-8863
Fax 714-556-8863

Bayley Construction
8005 S.E. 28th St.
P.O. Box 9004
Mercer Island, WA. 98040
WA. License
BAYLEC034JC
Tel 206-621-8884
Fax 206-343-7728

BAYLEY CONSTRUCTION

DLR Group WWCOT
Architecture Engineering Planning Interiors

4280 Latham Street, Suite H
Riverside, California 92501
T 951.682.0470
F 951.682.1801

wwcot.com
dlrgroup.com

Santa Monica
Sacramento
Riverside
Palm Springs
Modesto
Shanghai, China

Copyright © 2010, DLR Group Inc. of California
DBA DLR Group WWCOT. All Rights Reserved

GLUMAC
engineers for a sustainable future™

18200 Von Karman Ave., Suite 100
Irvine, CA 92612
T. 949.833.8190 F. 949.833.0252

Job No.: 04.10.00861
Contact: JM
www.glumac.com

Public Agency Submittal:
Issued for Bidding:
Issued for Construction:

Revisions:

A 4/8/2011 Owner Changes

REGISTERED PROFESSIONAL ENGINEER
JOHN WITSCHORIK
No. E10328
Exp. 9-30-12
ELECTRICAL
STATE OF CALIFORNIA

FOR CONSTRUCTION

Phase I
FOX
ENTERTAINMENT
PLAZA
3605 Market Street
Riverside, CA 92501

City of Riverside

CITY OF RIVERSIDE

3900 Main Street , Riverside, CA 92522

Phase: CD
Revised 02.10.11
DLR Group Project No.75-10603-00

Cross-Aisle Level
Lighting Plan

Issued Date: 05.20.11
Drawn By: -
Checked By: -

A- E202
Sheet №

File Path & Name: G:\2010 - Jobs\04.10.00861\Fox Elevator Annex\Arch\2011-01-11\75-10603-00 Riv Parking Garage 7_Phase I.rvt
© WWCOT 2009 -- Plotted 1/11/2011 2:24:38 PM

LIGHTING FIXTURE SCHEDULE

FIXTURE TYPE	MANUFACTURER AND CAT. NO.	DESCRIPTION	VOLTAGE	LAMPS NO.	LAMPS TYPE	FIXTURE "WATTS"	REMARKS
F1	T.B.D.	4FT FLUORESCENT STRIP WITH REFLECTOR	120	2	F32T8	62	
D1	T.B.D.	DECORATIVE SCONCE	120	1	CFL	46	
D2	T.B.D.	PENDANT	120	4	CFL	28	
D3	T.B.D.	RECESSED DOWNLIGHT	120	1	CFL	28	
G1	T.B.D.	WET LOCATION SCONCE	120	1	CFL	46	
G2	T.B.D.	WET LOCATION RECESSED DOWNLIGHT	120	1	CFL	28	
G3	T.B.D.	WET LOCATION RECESSED STEP LIGHT	120	1	CFL	21	
X1	BUILDING STANDARD	WHITE THERMOPLASTIC EXIT SIGN	120/277	1	LED	10	

GENERAL LIGHTING FIXTURE NOTES:

A. MOUNTING HEIGHTS OF ALL WALL MOUNTED AND SUSPENDED LIGHTING FIXTURES SHALL BE DETERMINED BY THE ARCHITECT. REFER TO ARCHTECTURAL SECTIONS AND ELEVATIONS.

B. REFER TO ARCHITECTURAL REFLECTED CEILING PLANS FOR EXACT LOCATION OF ALL LIGHTING FIXTURES.

C. PROVIDE ELECTRONIC BALLASTS IN FLUORESCENT LIGHT FIXTURES.

D. COMPACT FLUORESCENT BALLASTS SHALL BE HIGH POWER FACTOR ELECTRONIC TYPE. BALLASTS SHALL HAVE INTERNAL CIRCUITRY TO DETECT END OF LAMP LIFE AND SHUT DOWN BALLAST.

E. VERIFY CEILING TYPES AND COORDINATE FIXTURE TRIMS PRIOR TO PURCHASE OF LIGHTING FIXTURES.

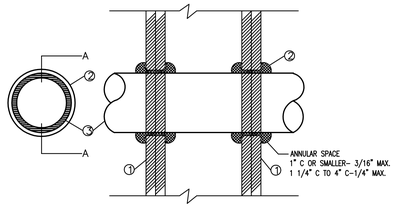

SECTION A–A

NOTES:

1. GYP BOARD, 5/8" THICK: 1HR. – 1 LAYER, 2HR. – 2 LAYERS.
2. FILL, VOID OR CAVITY MATERIAL – CAULK: CAULK FILL MATERIAL FORCED INTO ANNULAR SPACE TO MAX. EXTENT POSSIBLE AND WITH A MIN. 1/4" DIAMETER BEAD OF CAULK APPLIED TO PERIMETER OF PIPE OR CONDUIT AT ITS EGRESS FROM THE WALL. MINNESOTA MINING & MANUFACTURING CO.: TYPES SP –25 S/L, CP –25 N/S.
3. CONDUIT: NOM. 4" DIAMETER (OR SMALLER) STEEL EMT CONDUIT OR NOM. 1" DIAMETER (OR SMALLER) FLEXIBLE STEEL CONDUIT. A MAX. OF ONE PIPE OR CONDUIT IS PERMITTED IN THE FIRESTOP SYSTEM. PIPE OR CONDUIT TO BE INSTALLED NEAR CENTER OF STUD CAVITY WIDTH AND TO BE RIGIDLY SUPPORTED ON BOTH SIDES OF WALL ASSEMBLY.
4. FIRESTOP SYSTEM: INSTALLED SYMMETRICALLY ON BOTH SIDES OF WALL ASSEMBLY. THE HOURLY F RATING OF THE FIRESTOP SYSTEM IS EITHER 1 OR 2 HR. DEPENDING UPON THE HOURLY FIRE RATING OF THE WALL ASSEMBLY IN WHICH IT IS INSTALLED. THE HOURLY T RATING FOR THE FIRESTOR SYSTEM ARE DEPENDENT UPON THE SIZE OF THE CONDUIT, THE FIRESTOP CONFIGURATION AND THE HOURLY FIRE RATING OF THE WALL ASSEMBLY IN WHICH IT IS INSTALLED. THE FIRESTOP CONFIGURATION IS DEPENDENT UPON THE SIZE OF THE ANNULAR SPACE BETWEEN THE STEEL PIPE OR CONDUIT (OR PIPE COVERING) AND THE PERIMETER OF THE CIRCULAR THROUGH OPENING IN THE GYPSUM WALLBOARD LAYERS.

SYSTEM WL–1001

F RATINGS – 1 AND 2 HR.

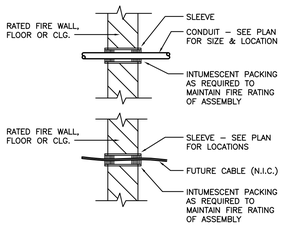

FOR FIRE RATED WALLS

3 CONDUIT PENETRATION OF RATED WALL

SCALE: NONE

16511–04

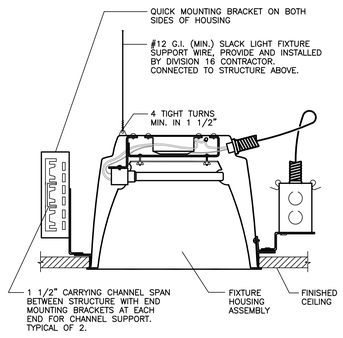

2 RECESSED DOWNLIGHT/ WALLWASHER MOUNTING DETAIL

SCALE: NONE

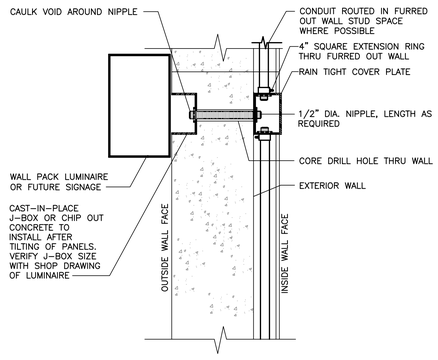

1 EXTERIOR WALL MOUNTED LIGHT FIXTURE

SCALE: NONE

16521–22

Bayley Construction
3730 S. Susan St.
Suite 200
Santa Ana, CA, 92704
CA. License 734880
Tel 714-540-8863
Fax 714-556-8863

Bayley Construction
8005 S.E. 28th St.
P.O. Box 9004
Mercer Island, WA. 98040
WA. License
BAYLEC0334JC
Tel 206-621-8884
Fax 206-343-7728

BAYLEY CONSTRUCTION

DLR Group WWCOT
Architecture Engineering Planning Interiors

4280 Latham Street, Suite H
Riverside, California 92501
T 951.682.0470
F 951.682.1801

wwcot.com
dlrgroup.com

Santa Monica
Sacramento
Riverside
Palm Springs
Modesto
Shanghai, China

Copyright © 2010, DLR Group Inc. of California
DBA DLR Group WWCOT. All Rights Reserved

GLUMAC
engineers for a sustainable future℠

18200 Von Karman Ave., Suite 100
Irvine, CA 92612
T. 949.833.8190 F. 949.833.0252

Job No.: 04.10.00861
Contact: JM
www.glumac.com

Public Agency Submittal:
Issued for Bidding:
Issued for Construction:

Revisions:

FOR CONSTRUCTION

REGISTERED PROFESSIONAL ENGINEER JONATHAN MITSUMORI No. E10328 Exp. 9-30-12 ELECTRICAL STATE OF CALIFORNIA

Phase I
FOX ENTERTAINMENT PLAZA
3605 Market Street
Riverside, CA 92501

City of Riverside

CITY OF RIVERSIDE

3900 Main Street , Riverside, CA 92522

Phase: CD
Revised 02.10.11
DLR Group Project No.75-10603-00

Lighting Fixture Schedule & Details

Issued Date: 05.20.11
Drawn By: -
Checked By: -

A- E301

Sheet №

File Path & Name: G:\2010 - Jobs\04.10.00861\Fox Elevator Annex\Arch\2011-01-11\75-10603-00 Rvt Parking Garage 7_Phase 1.rvt
© WWCOT 2009 - Plotted 1/11/2011 2:24:38 PM

CERTIFICATE OF COMPLIANCE (Page 4 of 4) OLTG-1C

Project Name: Fox Entertainment Plaza Annex | Date: February 10, 2011

ALLOWED AND INSTALLED OUTDOOR LIGHTING POWER

		Lighting Wattage Power Allowance	
A	Lighting power allowance for general hardscape (from OLTG-2C Page 1 of 3)	1157	Watts
B	Specific application lighting wattage allowance per unit length (from OLTG-2C Page 1 of 3)		Watts
C	Specific application wattage allowance for ornamental lighting (from OLTG-2C Page 1 of 3)		Watts
D	Specific application wattage allowance per application (from OLTG-2C Page 2 of 3)		Watts
E	Specific application lighting wattage allowance per area (from OLTG-2C Page 2 of 3)		Watts
F	Additional lighting power allowance for ordinance requirements (from OLTG-2C Page 3 of 3)		Watts
G	Total Allowed Wattage = Sum of rows A through F:	1157	Watts
H	Total Installed Watts (from Luminaire Schedule on OLTG-1C Page 2 of 4)	816	Watts

2008 Nonresidential Compliance Forms

CERTIFICATE OF COMPLIANCE (Part 1 of 4) OLTG-1C

Project Name: Fox Entertainment Plaza Annex | Date: February 10, 2011

Project Address: 3605 Market Street, Riverside, CA 92501 | Total Hardscape Illuminated Area: 1276 sq.ft.

GENERAL INFORMATION

Phase of Construction ☐ NEW CONSTRUCTION ☐ ADDITION ☐ ALTERATION

DOCUMENTATION AUTHOR'S DECLARATION STATEMENT

- I certify that this Certificate of Compliance documentation is accurate and complete.

Name: JONATHAN MITSUMORI | Signature:

Company: GLUMAC | Date: February 10, 2011

Address: 18200 VON KARMAN AVENUE, STE 100 | EA #: CEPE #:

City/St/Zip: IRVINE, CA 92606-4965 | Phone #: (949) 833-8190

Principal Lighting Designer's Declaration Statement

- I am eligible under Division 3 of the California Business and Professions Code to accept responsibility for the lighting design.
- This Certificate of Compliance identifies the lighting features and performance specifications required foe compliance with Title 24, Parts 1 and 6 of the California Code of Regulations.
- The design features represented on this Certificate of Compliance are consistent with the information provided to document this design on the other applicable compliance forms, worksheets, calculations, plans and specifications submitted to the enforement agency for approval with this building permit application.

Name: | Signature:

Company: GLUMAC | Phone #: (949) 833-8190

Address: 18200 VON KARMAN AVENUE, STE 100 | License #:

City/St/Zip: IRVINE, CA 92606-4965 | Date: February 10, 2011

Principal Lighting Designer's Declaration

☒ I certify that this Certificate of Compliance documentation is accurate and complete, and accounts for all outdoor lighting power, including building mounted, pole mounted, as well as all other outdoor lighting desgned for the site, and that Additional Lighting Power Allowances for Specific Applications or Additional Lighting Power Allowances for Ordinacne Requirements have not been counted more than one time for the same area, in accordance with Section 147 of the Standards.

Outdoor Lighting Mandatory Measures
Indicate location on building plans of Mandatory Measures Note Block:

LIGHTING COMPLIANCE FORMS & WORKSHEET (check box if worksheet is included)

For detailed instructions on the use of this and all Energy Efficiency Standards compliance forms, please refer to the Nonresidential Manual published by the California Energy Commission.

- ☒ OLTG-1C — Certificate of Compliance. All 3 pages required on plans for all submittals
- ☒ OLTG-2C (Page 1 of 3) — Lighting Wattage Allowances for General Hardscape, Sales Frontage, or Ornamental Lighting. Optional on plans.
- ☐ OLTG-2C (Page 2 of 3) — Lighting Wattage Allowances for Per Application or Per Area. Optional on plans.
- ☐ OLTG-2C (Page 3 of 3) — Additional Lighting Power Allowance for Ordinance Requirements. Optional on plans.

2008 Nonresidential Compliance Forms — August 2009

CERTIFICATE OF COMPLIANCE (Part 4 of 4) LTG-1C

Project Name: Fox Entertainment Plaza Annex | Date: February 10, 2011

CONDITIONED AND UNCONDITIONED SPACE LIGHTING MUST NOT BE COMBINED FOR COMPLIANCE

Indoor Lighting Power Conditioned Spaces	Watts	Indoor Lighting Power Unconditioned Spaces	Watts
Installed Lighting (from Conditioned LTG-1C Page 2)	3810	Installed Lighting (from Unconditioned LTG-1C Page 2)	0
Lighting Control Credit (from Conditioned Spaces LTG-2C)	- 0	Lighting Control Credit (from Unconditioned Spaces LTG-2C)	- 0
Adjusted **Installed** Lighting Power	= 3,810	Adjusted **Installed** Lighting Power	= 0
Complies if **Installed <= Allowed**	YES	Complies if **Installed** <= Allowed	YES
Allowed Lighting Power Conditioned Spaces (from LTG-3C)	5,155	**Allowed** Lighting Power Unconditioned Spaces (from LTG-3C)	0

REQUIRED ACCEPTANCE TEST

Designer:
This form is to be used by the designer and attached to the plans. Listed below is the acceptance test for the Lighting system, **LTG-2A**. The designer is required to check the acceptance tests and list all controls devices serving the building or space shall be certied as meeting the Acceptance Requirements for Code Compliance. If all the lighting system or control of a certain type requires a test, list the different lighting and the number of systems. The NA7 Section in the Appendix of the Nonresidential Reference Appendices Manual describes the test. Since this form will be part of the plans, completion of this section will allow the responsible party to budget for the scope of work appropriately. **Forms can be grouped by type of Luminaire controlled.**

Enforcement Agency:
Systems Acceptance. Before Occupancy Permit is granted for a newly constructed building or space or when ever new lighting system with controls is installed in the building or space shall be certified as meeting the Acceptance Requirements. The **LTG-2A** form is not considered a complete form and is not to be accepted by the enforcement agency unless the boxes are checked and/or filled and signed. In addition, a Certificate of Acceptance forms shall be submitted to the enforcement agency that certifies plans, specifications, installation certificates, and operating and maintenance information meet the requirements of 10-103(b) of Title 24 Part 6. The field inspector must receive the properly filled out and signed forms before the building can receive final occupancy. A copy of the **LTG-2A** for each different lighting luminaire control(s) must be provided to the owner of the building for their records.

Equipment Requiring Testing	Luminaires Controlled: Description	Number of like Controls	Location	LTG-2A: Controls and Sensors and Automatic DayLighting Controls Acceptance
				☐
				☐
				☐
				☐
				☐
				☐
				☐
				☐
				☐

2008 Nonresidential Compliance Forms — August 2009

CERTIFICATE OF COMPLIANCE (Part 1 of 4) LTG-1C

Project Name: Fox Entertainment Plaza Annex | Date: February 10, 2011

Project Address: 3605 Market Street, Riverside, CA 92501 | Climate Zone: 10 | Building CFA: 3499 sq. ft. | Unconditioned Floor Area:

Building Type: ☒ NON RESIDENTIAL ☐ HIGH RISE RESIDENTIAL ☐ HOTEL/MOTEL GUEST ☐ RELOCATABLE PUBLIC SCHOOLS ☐ CONDITIONED SPACES ☐ UNCONDITIONED SPACES ☐ SCHOOLS

Phase of Construction: ☐ NEW CONSTRUCTION ☐ ADDITION ☒ ALTERATION

Method of Compliance: ☐ COMPLETE BUILDING ☒ AREA CATEGORY ☐ TAILORED

DOCUMENTATION AUTHOR'S DECLARATION STATEMENT

- I certify that this Certificate of Compliance documentation is accurate and complete.

Name: JONATHAN MITSUMORI | Signature:

Company: GLUMAC | Date: February 10, 2011

Address: 18200 VON KARMAN AVENUE, STE 100 | EA #: CEPE #:

City/St/Zip: IRVINE, CA 92606-4965 | Phone #: (949) 833-8190

Principal Lighting Designer's Declaration Statement

- I am eligible under Division 3 of the California Business and Professions Code to accept responsibility for the lighting design.
- This Certificate of Compliance identifies the lighting features and performance specifications required foe compliance with Title 24. Parts 1 and 6 of the California Code of Regulations.
- The design features represented on this Certificate of Compliance are consistent with the information provided to document this design on the other applicable compliance forms, worksheets, calculations, plans and specifications submitted to the enforement agency for approval with this building permit application.

Name: JONATHAN MITSUMORI | Signature:

Company: GLUMAC | Phone #: (949) 833-8190

Address: 18200 VON KARMAN AVENUE, STE 100 | License #: E10328

City/St/Zip: IRVINE, CA 92606-4965 | Date: February 10, 2011

LIGHTING MANDATORY MEASURES

Indicate location on building plans of Mandatory Measures Note Block:

LIGHTING COMPLIANCE FORMS & WORKSHEET (check box if worksheet is included)

For detailed instructions on the use of this and all Energy Efficiency Standards compliance forms, please refer to the Nonresidential Manual published by the California Energy Commission.

- ☒ LTG-1C Pages 1 to 4 — Certificate of Compliance. All pages required on plans for all submittals
- ☐ LTG-2C — Lighting Controls Credit Worksheet
- ☒ LTG-3C — Indoor Lighting Power Allowance
- ☐ LTG-4C Pages 1 to 4 — Tailored Method Worksheet
- ☐ LTG-5C Pages 1 and 2 — Line Voltage Track Lighting Worksheet

2008 Nonresidential Compliance Forms — August 2009

OUTDOOR LIGHTING WORKSHEET (Page 1 of 3) OLTG-2C

Project Name: Fox Entertainment Plaza Annex | Date: February 10, 2011

A. LIGHTING POWER ALLOWANCE FOR GENERAL HARDSCAPE

A ILLUMINATED HARDSCAPE AREA	B AWA PER SQUARE FOOT	C AWA (AxB)	D PERIMETER LENGTH OF GENERAL HARDSCAPE	E LWA PER LINEAR FOOT	F LWA (DxE)	G IWA (WATTS)	H C+F+G
1276	0.092	117.392	293	0.92	269.56	770	1156.952
Enter total into OLTG-1C; Page 4 of 4; Row A; Lighting Power Allowance for General Hardscape:							1156.952

(A–C: AREA WATTAGE ALLOWANCE (AWA); D–F: LINEAR WATTAGE ALLOWANCE (LWA); G: INITIAL WATTAGE ALLOWANCE; H: TOTAL GENERAL HARDSCAPE LIGHTING ALLOWANCE)

☒ Yes: AWA, LWA, and IWA from Table 147-A was used as appropriate for the Outdoor Lighting Zone

B. SPECIFIC APPLICATION LIGHTING WATTAGE ALLOWANCE PER UNIT LENGTH (Available only for sales frontage)

A SPECIFIC LIGHTING APPLICATION	B LINEAR FEET OF FRONTAGE	C SALES FRONTAGE ALLOWANCE FOR OLZ (WATTS PER LF)	D WATTAGE ALLOWANCE (B x C)	E NAME OR SYMBOL	F LUMINAIRE TYPE	G LUMINAIRE QUANTITY	H WATTS PER LUMINAIRE	I DESIGN WATTS (G x H)	J ALLOWED WATTS MINIMUM OF D or I

Enter total into OLTG-1C; Page 4 of 4; Row B; Specific Application Lighting Wattage Allowance Per Unit Length:

C. SPECIFIC APPLICATION WATTAGE ALLOWANCE FOR ORNAMENTAL LIGHTING

A SPECIFIC LIGHTING APPLICATION	B SQUARE FEET OF HARDSCAPE	C ORNAMENTAL LIGHTING ALLOWANCE FOR OLZ (WATTS PER SF)	D WATTAGE ALLOWANCE (B x C)	E NAME OR SYMBOL	F LUMINAIRE TYPE	G LUMINAIRE QUANTITY	H WATTS PER LUMINAIRE	I DESIGN WATTS (G x H)	J ALLOWED WATTS MINIMUM OF D or I

Enter total into OLTG-1C; Page 4 of 4; Row C; Specific Application Wattage Allowance for Ornamental Lighting:

2008 Nonresidential Compliance Forms — August 2009

CERTIFICATE OF COMPLIANCE (Part 2 of 4) OLTG-1C

Project Name: Fox Entertainment Plaza Annex | Date: February 10, 2011

COMPLIANCE FIXTURE / LIGHTING CONTROL SCHEDULE and FIELD INSPECTION CHECKLIST

Installation Certificate, OLTG-1-INST (Retain a copy and verify form is completed and signed) — Field Inspector ☐

Certificate of Acceptance, OLTG-2A (Retain a copy and verify form is completed and signed) — Field Inspector ☐

A Name or Item Tag	B Luminaire Description (1) See footnote below (i.e.: 1 lamp pole-top shoe-box 400 watt metal halide)	C Cutoff Designation	D Watts per Luminaire (1)	E Special Features	F Default from NA8	F According to 130 (d or e)	G Number of Luminaires	H Installed Watts (DxG)	I Pass	I Fail
G1	SCONCE		46	☐	☒	☐	15	690	☐	☐
G2	RECESSED DOWNLIGHT		28	☐	☒	☐	3	84	☐	☐
G3	RECESSED STEP LIGHT		21	☐	☒	☐	2	42	☐	☐
				☐	☐	☐			☐	☐

Total # of Pages: 1 — Page Total Installed Watts: 816

Enter total into OLTG-1C; Page 4 of 4; Row H; Total Installed Watts: 816

1. Type of luminaire (i.e.:post top, wall pack, surface, shoe box); for non-incandescent luminaires, indicate nominal lamp wattage and lamp type (i.e.: fluorescent, incandescent, HID); ballast type (i.e.: electronic or magnetic); number of lamps and number of ballasts per luminaire. For incandescent luminaires, the luminaire wattage listed in column D shall be the maximum relamping rated wattage on a permanent factory-installed label on the luminaire, NOT the wattage of the lamp (bulb) used, in accordance with Secton 130(d or e).
2. If FAIL then describe on Page 2 of the Inspection Checklist Form and take appropriate action to correct. Verify building plans if necessary.

EXEMPT LUMINAIRES — Field Inspector ☐

Name or Symbol	Description of exempt luminaires in accordance with Section 147

MANDATORY CONTROLS — Field Inspector ☐

#	Description	Location	#	Description	Location

SPECIAL FEATURES INSPECTION CHECKLIST (See Page 2 of 4 of OLTG-1C)

The local enforcement agency should pay special attention to the items specified in this checklist. These items require special written justification and documentaion, and special verification. The local enforcement agency determines the adequacy of the justification, and may reject a building or design that otherwise complies based on the adequacy of the special justification and documentation submitted.

Field Inspection Notes or Descrepancies:

2008 Nonresidential Compliance Forms — August 2009

INDOOR LIGHTING POWER ALLOWANCE LTG-3-C

Project Name: Fox Entertainment Plaza Annex | Date: February 10, 2011

ALLOWED LIGHTING POWER (Choose One Method)

A separate LTG-3C must be filled out for Conditioned and Unconditioned Spaces. Indoor Lighting Power Allowances listed on this page are only for: ☒ CONDITIONED Spaces ☐ UNCONDITIONED Spaces

COMPLETE BUILDING METHOD - CONDITIONED SPACES

BUILDING CATEGORY (From 146 Table 146-E)	WATTS PER SF	COMPLETE BLDG. AREA	ALLOWED WATTS

AREA CATEGORY METHOD - CONDITIONED SPACES

A AREA CATEGORY (From 146 Table 146-F)	B WATTS PER SF	C AREA (SF)	D ALLOWED WATTS
LOBBIES; MAIN ENTRY LOBBY (1)	1.5	3,382	5,073
ELECTRICAL, MECHANICAL, TELEPHONE ROOMS (2)	0.7	117	82
Area Category Method Page TOTALS		3,499	5,155
Sum of Additional Allowed Watts from Area Category Method - Part B (from table below)			
Total Pages for Area Category Method: 1 — Area Category Method Project TOTALS		3,499 SF Areas	5,155 WATTS

AREA CATEGORY METHOD - Part B Additional Wattage Allowance (from Table 146-F Footnotes)

A Primary Function	B sf	C Additional Watts per sf Allowed	D Wattage allowance (BxC)	E Description(s) and Quantity of Special Luminaire (2) Types in each Primary Function Area	F Total Design Watts	G ALLOWED WATTS Smaller of
TOTALS - Enter into Area Category Method - Part A (table above)						WATTS

1. Additional watts available only when allowed according to the footnotes on bottom of Table 146-F for chandelier or sconce; art, craft, assembly or manufacturing specialized task work precision commercial/industrial work; or lab specialized task work.
2. Special luminaires are light fixtures described in the Table 146-F Footnotes that are subject to an addional wattage allowance.

TAILORED METHOD

Total Allowed Watts using the Tailored Method taken from LTG-4C (Page 1 of 4) Row 3

The indoor lighting power allowance using the Tailored Method of Compliance shall be determined using the LTG-4C set of forms. A separate set of LTG-4C forms shall be filled out for CONDITIONED and UNCONDITIONED spaces

2008 Nonresidential Compliance Forms — August 2009

CERTIFICATE OF COMPLIANCE (Part 2 of 4) (CONDITIONED) LTG-1C

Project Name: Fox Entertainment Plaza Annex | Date: February 10, 2011

INDOOR LIGHTING SCHEDULE and FIELD INSPECTION ENERGY CHECKLIST

Installation Certificate, LTG-1-INST (Retain a copy and verify form is completed and signed) — Field Inspector ☐

Certificate of Acceptance, LTG-2A (Retain a copy and verify form is completed and signed) — Field Inspector ☐

A separate Lighting Schedule Must Be Filled Out for Conditioned and Unconditioned Spaces. Installed Lighting Power Listed on this Lighting Schedule is for: ☒ CONDITIONED SPACE ☐ UNCONDITIONED SPACE

☐ The actual indoor lighting power listed below includes all installed permanent and portable lighting systems in accordance with 146(a)

☐ Only for offices: Up to the first 0.2 watts per square foot of portable lighting shall not be required to be included in the calculation of actual indoor lighting power density in accordance with the Exception to 146(a). All portable lighting in excess of 0.2 watts per square foot is totaled below.

A Name or Item Tag	B Complete Luminaire Description (i.e. 3 lamp fluorescent troffer, F32T8, one dimmable electronic ballast)	C Special Features	D Watts per Luminaire (1)	E CEC Default from NA8	E According to 130 (d or e)	F Number of Luminaires	G Installed Watts (DxF)	H Pass	H Fail
F1	4' FLUORESCENT STRIP	☐	62	☒	☐	2	124	☐	☐
D1	DECORATIVE SCONCE	☐	46	☒	☐	43	1978	☐	☐
D2	PENDANT	☐	110	☒	☐	14	1540	☐	☐
D3	RECESSED DOWNLIGHT	☐	28	☒	☐	6	168	☐	☐
		☐		☐	☐			☐	☐

INSTALLED WATTS PAGE TOTAL: 3810

Building total number of pages: 1

INSTALLED WATTS BUILDING TOTAL (Sum of all pages): 3810 — Enter into LTG-1C Page 4 of 4

1. Wattage shall be determined according to Section 130(d and e). Wattage shall be rating of light fixture, not rating of bulb.
2. If Fail then describe on Page 2 of the Inspection Checklist Form and take appropriate action to correct. Verify building plans if necessary.

2008 Nonresidential Compliance Forms — August 2009

OUTDOOR LIGHTING MANDATORY MEASURES

Project Name: Fox Entertainment Plaza Annex

☐ §132 **OUTDOOR LIGHTING**
ALL PERMANENTLY INSTALLED OUTDOOR LUMINAIRES EMPLOYING LAMPS RATED OVER 100 WATTS SHALL EITHER: HAVE A LAMP EFFICACY OF AT LEAST 60 LUMENS PER WATT; OR BE CONTROLLED BY A MOTION SENSOR UNLESS EXEMPTED FROM THE 8 POSSIBLE EXCEPTIONS. SEE SECTION 132.

☐ §132(b) **LUMINAIRE CUTOFF REQUIREMENTS**
ALL OUTDOOR LUMINAIRES THAT USE LAMPS RATED GREATER THAN 175 WATTS IN HARDSCAPE AREAS INCLUDING PARKING LOTS, BUILDING ENTRANCES, SALES AND NON-SALES CANOPIES, AND ALL OUTDOOR SALES AREAS SHALL BE DESIGNATED CUTOFF FOR LIGHT DISTRIBUTION.
TO COMPLY WITH THIS REQUIREMENT, THE LUMINAIRE SHALL BE RATED CUTOFF IN A PHOTOMETRIC TEST REPORT THAT INCLUDES ANY TILT OR OTHER NON-LEVEL MOUNTING CONDITION OF THE INSTALLED LUMINAIRE.
CUTOFF IS A LUMINAIRE LIGHT DISTRIBUTION CLASSIFICATION WHERE THE CANDELA PER 1000 LAMP LUMENS DOES NOT NUMERICALLY EXCEED 25 AT OR ABOVE A VERTICAL ANGLE OF 90 DEGREES ABOVE NADIR, AND 100 AT OR ABOVE A VERTICAL ANGLE OF 80 DEGREES ABOVE NADIR.
NADIR IS IN THE DIRECTION OF STRAIGHT DOWN, AS WOULD BE INDICATED BY A PLUMB LINE. 90 DEGREES ABOVE NADIR IS HORIZONTAL. 80 DEGREES ABOVE NADIR IS 10 DEGREES BELOW HORIZONTAL UNLESS EXEMPTED FROM THE 6 POSSIBLE EXCEPTIONS. SEE SECTION 132(b).

☒ §132(c)2 **CONTROLS FOR OUTDOOR LIGHTING**
ALL PERMANENTLY INSTALLED OUTDOOR LIGHTING SHALL BE CONTROLLED BY A PHOTOCONTROL OR ASTRONOMICAL TIME SWITCH THAT AUTOMATICALLY TURNS OFF THE OUTDOOR LIGHTING WHEN DAYLIGHT IS AVAILABLE UNLESS EXEMPTED FROM THE EXCEPTION. SEE SECTION 132©
FOR LIGHTING OF BUILDING FACADES PARKING LOTS SALES AND NON-SALES CANOPIES, ALL OUTDOOR SALES AREAS, AND STUDENT PICK-UP/DROP-OFF ZONES WHERE TWO OR MORE LUMINAIRES ARE USED, AN AUTOMATIC TIME SWITCH SHALL BE INSTALLED THAT IS CAPABLE OF;
(1) TURNING OFF THE LIGHTING WHEN NOT NEEDED AND
(2) REDUCING THE LIGHTING POWER (IN WATTS) BY AT LEAST 50 PERCENT BUT NOT EXCEEDING 80 PERCENT OR PROVIDING CONTINUOUS DIMMING THROUGH A RANGE THAT INCLUDES 50 PERCENT THROUGH 80 PERCENT REDUCTION UNLESS EXEMPTED FROM THE 6 POSSIBLE EXCEPTIONS.
SEE SECTION 132(C)2. THIS CONTROL SHALL MEET THE REQUIREMENTS OF SECTION 119(C).

2008 Nonresidential Compliance Forms — August 2009

CERTIFICATE OF COMPLIANCE (Part 3 of 4) OLTG-1C

Project Name: Fox Entertainment Plaza Annex | Date: February 10, 2011

A. OUTDOOR LIGHTING ZONE

OUTDOOR LIGHTING ZONE: ☐ OLZ 1 ☐ OLZ 2 ☒ OLZ 3 ☐ OLZ 4

Is the Outdoor Lighting Zone: ☐ Default in accordance with § 10-114, or ☐ Amended by JHA

Complete the information below if the default Outdoor Lighting Zone has been amended by the local jurisdiction having authority (JHA):

- ☐ The site is a government designed park, recreation area, wildlife preserve, or portion thereof, and has been designated as LZ2 or LZ3, in accordance with Table 10-114-A, because the site is contained within such a zone.
- ☐ The local jurisdiction having authority has officially adopted a change to the State Default Lighting Zone and has notified the Energy Commission by providing the materials required in §10-114(d) to the Executive Director.
- ☐ The adopted change is posted on the Energy Commission website

B. ADDITIONAL LIGHTING POWER ALLOWANCE FOR ORDINANCE REQUIREMENTS

Are additional lighting power allowances for ordinacne in Table 147-C used? ☐ Yes ☐ No

Complete the information below if additional lighting power allowances for ordinance requirements are used:

- ☐ The local jurisdiction having authority has officially adoped specific outdoor light levels, which are expressed as average or minimum footcandle level; by following a public process that allowed for formal public notification, review, and comment about the proposed change.
- ☐ The local jurisdiction having authority which adopted specific outdoor light levels and has notified the Commission by providing the following materials required 10-114(f) to the Executive Director

C. ACCEPTANCE FORMS

Required Acceptance Tests

Designer:
This form is to be used by the designer and attached to the plans. Listed below is the acceptance test for the Lighting system, LTG-2A. The designer is required to check the acceptance tests and list all control devices serving the building or space shall be certfied as meeting the Acceptance Requirements for Code Compliance. If all the lighting system or control of a certain type requires a test, list the different lighting and the number systems. The NA7 Section in the Appendix of the Nonresidential Reference Appendices Manual describes the test. Since this form will be part of the plans, completion of this section will allow the responsible party to budget for the scope of work appropriately. Forms can be grouped by type of Luminaire controlled.

Enforcement Agency:
Systems Acceptance. Before Occupancy Permit is granted for a newly constructed building or space or when ever new lighting system with controls is installed in the building or space shall be certified as meeting the Acceptance Requirements. The LTG-2A form is not considered a complete form and is not to be accepted by the enforcement agency unless the boxes are checked and/or filled and signed. In addition, a Certificate of Acceptance forms shall be submitted to the enforcement agency that certifies plans, specifications, installation certificates, and operating and maintenance information meet the requirements of 10-103(b) of Title 24 Part 6. The field inspector must receive the properly filled out and signed forms before the building can receive final occupancy. A copy of the LTG-2A for each different lighting luminaire control(s) must be provided to the owner of the building for their records.

Equipment Requiring Testing	Luminaires Controlled: Description	Number of Like Controls	Locations	Certificate of Acceptance OTLG-2A(1) Outdoor Lighting Acceptance Tests

1. Insert: OMS for Outdoor Motion Sensor; OLSC for Outdoor Lighting Shutoff Controls; OP for Outdoor Photocontrol; ATS for Astronomical Time Switch; and , STS for Standard (non-astronomical Time Switch acceptance.

2008 Nonresidential Compliance Forms — August 2009

MANDATORY MEASURES

Project Name: Fox Entertainment Plaza Annex

☐ §131(d) **BUILDING SHUT-OFF**
THE BUILDING LIGHTING SHUT-OFF SYSTEM CONSISTS OF AN AUTOMATIC TIME SWITCH, WITH A ZONE FOR EACH FLOOR.

☐ §131(c) **OVERRIDE FOR BUILDING LIGHTING SHUT-OFF**
THE AUTOMATIC BUILDING SHUT-OFF SYSTEM IS PROVIDED WITH A MANUAL, ACCESSIBLE OVERRIDE SWITCH IN SIGHT OF THE LIGHTS. THE AREA OF OVERRIDE IS NOT TO EXCEED 5,000 SQ. FT.

☒ §131(c) **AUTOMATIC CONTROL DEVICES CERTIFIED:**
ALL AUTOMATIC CONTROL DEVICES SPECIFIED ARE CERTIFIED.
ALL ALTERNATE EQUIPMENT SHALL BE CERTIFIED AND INSTALLED AS DIRECTED BY THE MANUFACTURER.

☒ §131(c) **FLUORESCENT BALLAST AND LUMINARIES CERTIFIED:**
ALL FLUORESCENT FIXTURES SUBJECT TO CERTIFICATION AND SPECIFIED FOR THE PROJECTS ARE CERTIFIED.

☒ §131(c) **INDIVIDUAL ROOM/AREA CONTROLS:**
EACH ROOM AND AREA IN THIS BUILDING IS EQUIPPED WITH A SEPARATE SWITCH OR OCCUPANCY SENSOR DEVICE FOR EACH AREA WITH FLOOR-TO-CEILING WALLS.

☒ §131(c) **UNIFORM REDUCTION FOR INDIVIDUAL ROOMS:**
ALL ROOMS AND AREAS GREATER THAN 100 SQUARE FEET AND MORE THAN 0.8 WATTS PER SQUARE FOOT OF LIGHTING LOAD SHALL BE CONTROLLED WITH MULTI-LEVEL SWITCHING FOR UNIFORM REDUCTION OF LIGHTING WITHIN THE ROOM.

☒ §131(c) **DAYLIT AREA CONTROL:**
ALL ROOMS THAT ARE GREATER THAN 250 SQUARE FEET AND CONTAIN WINDOWS AND SKYLIGHTS, THAT ALLOW FOR THE EFFECTIVE USE OF DAYLIGHT IN THE AREA SHALL HAVE 50% OF THE LIGHTING POWER IN EACH DAYLIT AREA CONTROLLED BY A SEPARATE SWITCH; OR
☐ §131(c) THE EFFECTIVE USE OF DAYLIGHT CANNOT BE ACCOMPLISHED BECAUSE THE WINDOWS ARE CONTINUOUSLY SHADED BY A BUILIDING ON THE ADJACENT LOT. DIAGRAM OF SHADING DURING DIFFERENT TIMES OF THE YEAR IS INCLUDED ON PLANS.

☐ §131(e) **DISPLAY LIGHTING:**
DISPLAY LIGHTING SHALL BE SEPARATELY SWITCHED ON CIRCUITS THAT ARE 20 AMPS OR LESS.

2008 Nonresidential Compliance Forms

CERTIFICATE OF COMPLIANCE (Part 3 of 4) LTG-1C

Project Name: Fox Entertainment Plaza Annex | Date: February 10, 2011

INDOOR LIGHTING SCHEDULE and FIELD INSPECTION ENERGY CHECKLIST

Fill in controls for all spaces: a) area controls, b) multi-level controls, c) manual daylighting controls for daylit areas > 250 ft2, automatic daylighting controls for daylit areas > 2,500 ft2, d) shut-off controls, e) display lighting controls, f) tailored lighting controls - general lighting controlled separately from display, ornamental and diplay case lighting and g) demand responsive automatic controls for retail stores > 50,000 ft2, in accordance with Section 131.

MANDATORY LIGHTING CONTROLS - FIELD INSPECTION ENERGY CHECKLIST

Type / Description	Number of Units	Location in Building	Special Features	Field Inspector Pass	Field Inspector Fail
ETC CONTROL RACK			☐	☐	☐
ROOF PHOTOCELL			☐	☐	☐
			☐	☐	☐

SPECIAL FEATURES INSPECTION CHECKLIST (See Page 2 of 4 of LTG-1C)

The local enforcement agency should pay special attention to the items specified in this checklist. These items require special written justification and documentation, and special verification. The local enforcement agency determines the adequacy of thejustification, and may reject a building or design that otherwise complies based on the adequacy of the special justification and documentation submitted.

Field Inspector's Notes or Discrepancies:

2008 Nonresidential Compliance Forms — August 2009

Bayley Construction, 3730 S. Susan St. Suite 200, Santa Ana, CA. 92704, CA. License 734880, Tel 714-540-8863, Fax 714-556-8863

Bayley Construction, 8005 S.E. 28th St. P.O. Box 9004, Mercer Island, WA. 98040, WA. License BAYLEC034JC, Tel 206-621-8884, Fax 206-343-7728

DLR Group WWCOT — Architecture Engineering Planning Interiors

4280 Latham Street, Suite H, Riverside, California 92501
T 951.682.0470
F 951.682.1801
wwcot.com
dlrgroup.com

Santa Monica
Sacramento
Riverside
Palm Springs
Modesto
Shanghai, China

Copyright © 2010, DLR Group Inc. of California DBA DLR Group WWCOT, All Rights Reserved

GLUMAC — engineers for a sustainable future™
18200 Von Karman Ave., Suite 100, Irvine, CA 92612, T. 949.833.8190, F. 949.833.0252
Job No.: 04.10.00861, Contact: JM, www.glumac.com

Public Agency Submittal:
Issued for Bidding:
Issued for Construction:

Revisions:

REGISTERED PROFESSIONAL ENGINEER — JONATHAN MITSUMORI, P.E. — No. E10328 Exp. 9-30-12 — ELECTRICAL — STATE OF CALIFORNIA

FOR CONSTRUCTION

Phase I FOX ENTERTAINMENT PLAZA

3605 Market Street
Riverside, CA 92501

City of Riverside
3900 Main Street , Riverside, CA 92522

Phase: CD
Revised 02.10.11
DLR Group Project No.75-10603-00

Electrical Title 24 Forms

Issued Date: 05.20.11
Drawn By: -
Checked By: -

A- E302

Sheet №

LIGHTING TITLE 24 — 1

File Path & Name: G:\2010 - Jobs\04.10.00861\Fox Elevator Annex\Arch\2011-01-11\75-10603-00 Riv Parking Garage 7_Phase 1.rvt
© WWCOT 2009 -- Plotted 1/11/2011 2:24:38 PM

LOBBY ANNEX MECHANICAL PLANS

HVAC LEGEND

GENERAL

SYMBOL	DESCRIPTION
(N)	NEW WORK
(E)	EXISTING WORK TO REMAIN
X X X X X X X	EXISTING WORK TO BE REMOVED
℄	CENTER LINE
	POINT OF CONNECTION
AD/AP	ACCESS DOOR / ACCESS PANEL
T H CO2	THERMOSTAT, HUMIDISTAT, CO SENSOR, CO2 SENSOR
1 / M-1	DETAIL 1, DRAWING M-1
A / M-1	SECTION A, DRAWING M-1
1 / M-1	ELEVATION 1, DRAWING M-1
EXH / 1	RISER IDENTIFICATION EXHAUST #1
HP / 1	EQUIPMENT IDENTIFICATION HEAT PUMP UNIT #1
1	KITCHEN EQUIPMENT TAG
1	SHEET NOTE REFERENCE TAG

VALVES & GAUGES

SYMBOL	DESCRIPTION
	BALL VALVE
	SOLENOID CONTROL VALVE
	PRESSURE AND TEMP. RELIEF VALVE
	BUTTERFLY VALVE
	MOTORIZED BUTTERFLY VALVE
	GATE VALVE
	BALANCING VALVE
	ANGLE GATE VALVE
	GLOBE VALVE
	ANGLE GLOBE VALVE
	CHECK VALVE
	2-WAY CONTROL VALVE
	3-WAY CONTROL VALVE
	NON-SLAM WAFER CHECK VALVE
	PRESSURE REDUCING VALVE (PRV)
	DIAPHRAM VALVE
	LOCK SHIELD VALVE
	NEEDLE VALVE
	QUICK OPENING VALVE
	VENTURI FLOW METER
	PRESSURE GAUGE
	PRESS. GAUGE WITH COCK AND SNUBBER
	THERMOMETER

DUCTWORK

SYMBOL (DOUBLE LINE)	DESCRIPTION	SYMBOL (SINGLE LINE)
AD/AP	ACCESS DOOR / ACCESS PANEL	
	FLEXIBLE CONNECTION	
	FLEXIBLE DUCT RUNOUT TO DIFFUSER	
12x6	DUCT SIZE (WIDTH x DEPTH)	12x6
	DUCT THROUGH BEAM PENETRATION	
R D	DUCT OFFSET (RISE OR DROP)	R D
VD	VOLUME DAMPER	VD
FD SD FSD	FIRE, SMOKE OR FIRE/SMOKE DAMPER	FD SD FSD
	SUPPLY DUCT UP	
	SUPPLY DUCT DOWN	
	EXHAUST DUCT UP	
	EXHAUST DUCT DOWN	
	RETURN DUCT UP	
	RETURN DUCT DOWN	
	CROSS SECTION OF SUPPLY DUCT	
	CROSS SECTION OF EXHAUST AIR DUCT	
	CROSS SECTION OF RETURN AIR DUCT	
	CROSS SECTION OF ROUND DUCT	
	DUCT ELBOW WITH TURNING VANES	
	SMOOTH RADIUS DUCT ELBOW WITHOUT TURNING VANES	
12x6	ACOUSTICAL LINING DUCT DIMENSION IS ID	12x6
M	MOTORIZED DAMPER	M
SIZE / TD CFM	TRANSFER DUCT (WITH LINER)	SIZE / TD CFM
8'-11" BOD	INDICATES 8'11" TO BOTTOM OF DUCT	8'-11" BOD
NECK SIZE-TAG-CFM	ROUND OR SQUARE CEILING SUPPLY DIFFUSER (SEE SCHEDULE) 4-WAY THROW UNLESS INDICATED OTHERWISE.	NECK SIZE-TAG-CFM
NECK SIZE-TAG-CFM	ROUND OR SQUARE CEILING EXHAUST REGISTER (SEE SCHEDULE)	NECK SIZE-TAG-CFM
NECK SIZE-TAG-CFM	ROUND OR SQUARE CEILING RETURN REGISTER (SEE SCHEDULE)	NECK SIZE-TAG-CFM
NECK SIZE-TAG-CFM	ROUND OR SQUARE CEILING RETURN GRILLE (SEE SCHEDULE)	NECK SIZE-TAG-CFM
NECK SIZE-TAG-CFM	ROUND OR SQUARE CEILING RETURN GRILLE (SEE SCHEDULE)	NECK SIZE-TAG-CFM
NECK SIZE-TAG-CFM	ROUND OR SQUARE CEILING RETURN GRILLE (SEE SCHEDULE)	NECK SIZE-TAG-CFM
NECK SIZE-TAG-CFM	WALL SUPPLY REGISTER (SEE SCHEDULE)	NECK SIZE-TAG-CFM
NECK SIZE-TAG-CFM	WALL RETURN REGISTER (SEE SCHEDULE)	NECK SIZE-TAG-CFM
A	LINEAR SLOT DIFFUSER (SEE SCHEDULE)	A
DSD	DUCT SMOKE DETECTOR	

PIPING

SYMBOL	DESCRIPTION
	DIRECTION OF SLOPE
	DIRECTION OF FLOW
	PIPE UP
	PIPE DOWN
	PIPE DROP/PIPE RISE
	TOP CONNECTION – BRANCH LINE
	BOTTOM CONNECTION – BRANCH LINE
	PIPE ANCHOR
	TEE UP
	TEE DOWN
	STRAINER
	STRAINER WITH BLOW OFF
	INLINE PUMP
	BASE MOUNTED PUMP
	TEST TEE
	TEST TAP (PETE'S PLUG)
	MANUAL AIR VENT
	AUTOMATIC AIR VENT
	VACUUM BREAKER
	VENT THRU ROOF
	PIPE GUIDE
	EXPANSION JOINT
	FLEXIBLE CONNECTOR
	UNION
	CAPPED OR PLUGGED TEE
	BLIND FLANGE, CAP
	CONCENTRIC REDUCER
	ECCENTRIC REDUCER
	EXPANSION LOOP
	VALVE ON RISE

MISCELLANEOUS

SYMBOL	DESCRIPTION
RD	REFRIGERANT DISCHARGE
RS	REFRIGERANT SUCTION
	PNEUMATIC CONTROL VALVE
A	AIR LINE

ABBREVIATIONS

AAV	AUTOMATIC AIR VENT
ABV	ABOVE
AC	AIR CONDITIONING
ACCEPT	ACCEPTANCE
ACU	AIR CONDITIONING UNIT
AD	ACCESS DOOR
ADD	ADDITION
AF	AFTER FILTER
AFF	ABOVE FINISHED FLOOR
AFMS	AIR FLOW MEASURING STATION
AFUE	ANNUAL FUEL UTILIZATION EFFICIENCY
AG	AIR GAP
AHJ	AUTHORITY HAVING JURISDICTION
AHU	AIR HANDLING UNIT
AMB	AMBIENT
A	AMPERE
AP	ACCESS PANEL
APPROX	APPROXIMATELY
ARCH	ARCHITECT
ARI	AMERICAN REFRIGERATION INSTITUTE
AS	AIR SEPARATOR
AUTO	AUTOMATIC
AUX	AUXILIARY
B	BOILER
BBD	BOILER BLOW DOWN
BDD	BACKDRAFT DAMPER
BEL	BELOW
BHP	BRAKE HORSEPOWER
BHT	BASEBOARD HEATER
BMS	BUILDING MANAGEMENT SYSTEM
BOD	BOTTOM OF DUCT
BOP	BOTTOM OF PIPE
BFP	BACKFLOW PREVENTER
BSMT	BASEMENT
BTU	BRITISH THERMAL UNIT
BTUH	BTU PER HOUR
BV	BALL VALVE OR BALANCING VALVE
BYV	BUTTERFLY VALVE
C	COMMON, CONDENSATE OR CONDUIT
CA	CONTROL AIR
CAP	CAPACITY
CAV	CONSTANT AIR VOLUME
CB	CHILLED BEAM
CC	COOLING COIL OR CONTROLS CONTRACTOR
CEG	CEILING EXHAUST GRILLE
CER	CEILING EXHAUST REGISTER
CFF	CAP FOR FUTURE
CFM	CUBIC FEET PER MINUTE
CFS	CUBIC FEET PER SECOND
CDWR	CONDENSER WATER RETURN
CDWS	CONDENSER WATER SUPPLY
CHWR	CHILLED WATER RETURN
CHWS	CHILLED WATER SUPPLY
CH	CHILLER
CHV	CHECK VALVE
CL	CENTERLINE
CLG	CEILING
CO	CLEANOUT
COL	COLUMN
COMP	COMPRESSOR
CONC	CONCRETE
COND	CONDENSATE
CONN	CONNECTION
CONT	CONTINUATION
CONTR	CONTRACTOR
COP	COEFFICIENT OF PERFORMANCE
CP	CONTROL PANEL OR CONDENSATE PUMP
CPF	CHEMICAL POT FEEDER
CR	CONDENSATE RETURN
CRR	CEILING RETURN REGISTER
CRG	CEILING RETURN GRILLE
CS	CIRCUIT SETTER
CSD	CEILING SUPPLY DIFFUSER
CTE	CONNECT TO EXISTING
CU FT	CUBIC FEET
CU IN	CUBIC INCH
CV	CONSTANT VOLUME OR CONTROL VALVE
CW	COLD WATER
D	DROP OR DRAIN
DB	DRY BULB TEMPERATURE
DDC	DIRECT DIGITAL CONTROL
DEFL	DEFLECTION
DIA	DIAMETER
DIFF	DIFFERENCE
DN	DOWN
DP	DIFFERENTIAL PRESSURE
DPT	DEW POINT TEMPERATURE
DSD	DUCT SMOKE DETECTOR
DV	DIAPHRAGM VALVE
DWG(S)	DRAWING(S)
DX	DIRECT EXPANSION
(E)	EXISTING
EA	EXHAUST AIR OR EACH
EAD	EXHAUST AIR DAMPER
EAT	ENTERING AIR TEMPERATURE
EC	ELECTRICAL CONTRACTOR
ECON	ECONOMIZER
EDB	ENTERING DRY BULB TEMPERATURE
EER	ENERGY EFFICIENCY RATING
EF	EXHAUST FAN
EFF	EFFICIENCY
EJ	EXPANSION JOINT
EL	ELEVATION
ELEC	ELECTRICAL
EMS	ENERGY MANAGEMENT SYSTEM
EQUIP	EQUIPMENT
ESP	EXTERNAL STATIC PRESSURE
EWB	ENTERING WET BULB TEMPERATURE
EWT	ENTERING WATER TEMPERATURE
EXH	EXHAUST
EXPT	EXPANSION TANK
EXT	EXTERNAL
F	FAHRENHEIT OR FILTER
FPB	FAN POWERED BOX
FC	FLEXIBLE CONNECTION OR FAIL CLOSED
FCU	FAN COIL UNIT
FD	FIRE DAMPER
FF	FINAL FILTER OR FINISHED FLOOR
FLR	FLOOR
FO	FAIL OPEN
FPI	FINS PER INCH
FPM	FEET PER MINUTE
FPS	FEET PER SECOND
FSD	FIRE/SMOKE DAMPER
FT	FOOT OR FEET
G	GAS
GA	GAUGE, GAGE
GAL	GALLONS
GALV	GALVANIZED
GC	GAS COCK OR GENERAL CONTRACTOR
GLV	GLOBE VALVE
GN	GENERAL NOTE
GPM	GALLONS PER MINUTE
GND	GROUND
GV	GATE VALVE
H	HEIGHT
HB	HOSE BIBB
HC	HEATING COIL
HD	HEAD
HOR	HORIZONTAL
HP	HIGH PRESSURE
HP	HORSEPOWER
HP	HEAT PUMP
HPC	HIGH PRESSURE CONDENSATE
HPS	HIGH PRESSURE STEAM
HR	HOUR(S)
HRU	HEAT RECOVERY UNIT
HS	HUMIDITY SENSOR
HTR	HEATER
HV	HOSE VALVE
HVAC	HEATING, VENTILATING & AIR CONDITIONING
HW	HOT WATER
HWR	HEATING WATER RETURN
HWS	HEATING WATER SUPPLY
HX	HEAT EXCHANGER
HZ	FREQUENCY (HERTZ)
ID	INSIDE DIAMETER
IN	INCH(ES)
IPLV	INTEGRATED PART LOAD VALUE
JB	JUNCTION BOX
KW	KILOWATT
KWH	KILOWATT HOUR
L	LENGTH
LAT	LEAVING AIR TEMPERATURE
LBS	POUNDS
LDB	LEAVING DRY BULB
LF	LINEAR FEET
LP	LOW PRESSURE
LPC	LOW PRESSURE CONDENSATE
LPS	LOW PRESSURE STEAM
LWB	LEAVING WET BULB
LWT	LEAVING WATER TEMPERATURE
M	MOTOR
MA	MIXED AIR
MAD	MIXED AIR DAMPER
MAX	MAXIMUM
MBH	THOUSAND BTU PER HOUR
MC	MECHANICAL CONTRACTOR
MCA	MINIMUM CIRCUIT AMPACITY
MCC	MOTOR CONTROL CENTER
MD	MOTORIZED DAMPER
MECH	MECHANICAL
MERV	MINIMUM EFFICIENCY RATING VALUE
MFR	MANUFACTURER
MIN	MINIMUM
MOCP	MAXIMUM OVER CURRENT PROTECTION
MPC	MEDIUM PRESSURE CONDENSATE
MPS	MEDIUM PRESSURE STEAM
MV	MANUAL AIR VENT
(N)	NEW
N/A	NOT APPLICABLE
NC	NORMALLY CLOSED
NIC	NOT IN CONTRACT
NO	NUMBER OR NORMALLY OPEN
NOM	NOMINAL
NPSH	NET POSITIVE SUCTION HEAD
NTS	NOT TO SCALE
OAD	OUTSIDE AIR DAMPER
OAT	OUTSIDE AIR TEMPERATURE
OBD	OPPOSED BLADE DAMPER
OC	ON CENTER
OD	OUTSIDE DIAMETER
OFCI	OWNER FURNISHED CONTRACTOR INSTALLED
OFOI	OWNER FURNISHED OWNER INSTALLED
OPER	OPERATING
OSA	OUTSIDE AIR
OV	OUTLET VELOCITY
P	PUMP OR PRESSURE OR POLE
PC	PUMPED CONDENSATE
PD	PRESSURE DROP
PF	PREFILTER
PG	PIPE GUIDE OR PRESSURE GAUGE
PH	PHASE (ELECTRICAL)
PHC	PREHEAT COIL
PLBG	PLUMBING
POC	POINT OF CONNECTION
PRESS	PRESSURE
PRV	PRESSURE REDUCING VALVE
PS	PRESSURE SENSOR
PSI	POUNDS PER SQUARE INCH
PSIA	PSI ABSOLUTE
PSIG	PSI GAUGE
PV	PLUG VALVE
QTY	QUANTITY
R	RISERS, RELOCATE OR RISE
RA	RETURN AIR
RAD	RETURN AIR DAMPER
RD	REFRIGERANT DISCHARGE OR ROOF DRAIN
REF	ROOFTOP EXHAUST FAN
REFRIG	REFRIGERATION
REJ	REJECTION
REQ'D	REQUIRED
REV	REVISE, REVISION OR REVOLUTIONS
RF	RETURN FAN
RH	RELATIVE HUMIDITY
RHC	REHEAT COIL
RHT	RADIANT HEATER
RM	ROOM
RPM	REVOLUTIONS PER MINUTE
RS	REFRIGERANT SUCTION
RTU	ROOFTOP UNIT
S	SUPPLY OR SLOPE
SA	SUPPLY AIR
SCFM	CFM, STANDARD CONDITIONS
SD	SMOKE DAMPER
SEER	SEASONAL ENERGY EFFICIENCY RATING
SEN	SENSIBLE
SF	SUPPLY FAN OR SQUARE FEET
SHC	SQUARE HEAD COCK
SN	SHEET NOTE
SP	STATIC PRESSURE
SPD	SPLITTER DAMPER
SPEC	SPECIFICATIONS
SQ IN	SQUARE INCH
ST	STRAINER OR SOUND TRAP
STD	STANDARD
STRUCT	STRUCTURAL
SV	STEAM VENT
T	THERMOMETER OR THERMOSTAT
TCP	TEMPERATURE CONTROL PANEL
TDH	TOTAL DYNAMIC HEAD
TEMP	TEMPERATURE
TI	TENANT IMPROVEMENT
TRG	TRANSFER GRILLE
TS	TEMPERATURE SENSOR
TSP	TOTAL STATIC PRESSURE
TT	TEST TAP OR TEST TEE
TXV	THERMAL EXPANSION VALVE
(TYP)	TYPICAL
U	HEAT TRANSFER COEFFICIENT
UG	UNDERGROUND
UH	UNIT HEATER
UON	UNLESS OTHERWISE NOTED
V	VENT OR VOLT OR VELOCITY
VAV	VARIABLE AIR VOLUME
VB	VACUUM BREAKER
VD	VOLUME DAMPER
VEL	VELOCITY
VERT	VERTICAL
VFD	VARIABLE FREQUENCY DRIVE
VFM	VENTURI FLOW METER
VOL	VOLUME
VTR	VENT THROUGH ROOF
W	WASTE OR WIDTH OR WATTS
W/	WITH
W/O	WITHOUT
WB	WET BULB TEMPERATURE
WC	WATER COLUMN
WEG	WALL EXHAUST GRILLE
WG	WATER GAUGE
WP	WORKING PRESSURE
WPD	WATER PRESSURE DROP
WRR	WALL RETURN REGISTER
WSHP	WATER-SOURCE HEAT PUMP
WSR	WALL SUPPLY REGISTER
WT	WEIGHT
XFMR	TRANSFORMER
Z	ZONE

HVAC BASIS OF DESIGN

1. CODES AND STANDARDS
   A. BUILDING CODES ENFORCED BY THE AUTHORITY HAVING JURISDICTION IN CALIFORNIA:
   B. 2010 CALIFORNIA BUILDING CODE (CBC) BASED ON 2009 INTERNATIONAL BUILDING CODE (IBC) WITH STATE AMENDMENTS.
   C. 2010 CALIFORNIA MECHANICAL CODE (CMC) BASED 2009 UNIFORM MECHANICAL CODE (UMC) WITH STATE AMENDMENTS.
   D. 2008 TITLE 24, PART 6 CALIFORNIA ENERGY EFFICIENCY STANDARDS FOR RESIDENTIAL AND NONRESIDENTIAL BUILDINGS
2. OUTDOOR DESIGN CONDITIONS
   A. SUMMER: 100°F DB/69°F WB (ASHRAE 0.5% RIVERSIDE, CA)
   B. WINTER: 34°F (ASHRAE 99.6%, RIVERSIDE, CA)
   C. CALIFORNIA CLIMATE ZONE: 10
3. INDOOR DESIGN CONDITIONS
   A. ALL AREAS:
      i. COOLING 72°F +/-2°F
      ii. HEATING 68°F +/-2°F
4. VENTILATION CRITERIA:
   A. GENERAL: 15 CFM/PERSON AND 0.15 CFM/SQ.FT. MINIMUM
5. EXHAUST TO OUTDOORS
   A. BUILDING OUTSIDE AIR RELIEF ONLY
6. BUILDING ENVELOPE
   A. VERTICAL FENESTRATION ASSEMBLY:
      i. DESCRIPTION: 1" DUAL PANE, METAL FRAME, CLEAR, LOW-E GLASS – PPG SOLARBAN 60 (2)
      ii. U = 0.29 (CENTER OF GLASS)
      U = 0.564 (WITH FRAME)
      iii. SOLAR HEAT GAIN COEFFICIENT = 0.38 (CENTER OF GLASS)
      SOLAR HEAT GAIN COEFFICIENT = 0.41 (WITH FRAME)
   B. SKYLIGHT:
      i. DESCRIPTION: 1" DUAL PANE, METAL FRAME, CLEAR, LOW-E GLASS – PPG SOLARBAN 60 (2)
      ii. U = 0.29 (CENTER OF GLASS)
      U = 1.02 (WITH FRAME)
      iii. SOLAR HEAT GAIN COEFFICIENT = 0.38 (CENTER OF GLASS)
      SOLAR HEAT GAIN COEFFICIENT = 0.407 (WITH FRAME)
   C. WALL CONSTRUCTION:
      i. DESCRIPTION: 8" SOLID GROUT LIGHTWEIGHT CMU
      ii. OVERALL U-VALUE = 0.62
   D. FLAT ROOF:
      i. DESCRIPTION: R-30 RIGID INSULATION OVER METAL DECK
      ii. OVERALL U-VALUE = 0.031
   E. SLOPED ROOF:
      i. DESCRIPTION: R-13 BATT BETWEEN METAL FRAMING AND R-18 RIGID INSULATION
      ii. OVERALL U-VALUE = 0.036
7. INTERNAL HEAT GAIN
   A. LIGHTING:
      i. LOBBY: 1.5 W/SQ. FT.
   B. RECEPTACLE POWER: 0.5 W/SQ. FT.
   C. OCCUPANTS:
      i. 250 BTUH SENSIBLE / 200 BTUH LATENT
8. OCCUPANCY CRITERIA:
   A. LOBBY: 1 PERSON/100 SQ. FT.
9. DUCTWORK DESIGN CRITERIA
   A. ALL DUCTWORK: 0.08" W.G./100 FT. MAX
   B. DUCTWORK VELOCITY: 1500 FPM MAX
10. SEISMIC CRITERIA
   A. PER STRUCTURAL CONSTRUCTION DOCUMENTS

HVAC DRAWING LIST

A-M000	MECHANICAL LEAD SHEET
A-M001	MECHANICAL EQUIPMENT SCHEDULES
A-M101	MAIN/ORCHESTRA & BALCONY LEVEL FLOOR PLAN – MECHANICAL
A-M102	CROSS-AISLE LEVEL & ROOF PLAN – MECHANICAL
A-M201	MECHANICAL DETAILS
A-M301	MECHANICAL TITLE 24 FORMS
A-M302	MECHANICAL TITLE 24 FORMS

Bayley Construction
3730 S. Susan St.
Suite 200
Santa Ana, CA, 92704
CA. License 734880
Tel 714-540-8863
Fax 714-556-8863

Bayley Construction
8005 S.E. 28th St.
P.O. Box 9004
Mercer Island, WA, 98040
WA. License
BAYLEC034JC
Tel 206-621-8884
Fax 206-343-7728

DLR Group WWCOT
Architecture Engineering Planning Interiors

4280 Latham Street, Suite H
Riverside, California 92501
T 951.682.0470
F 951.682.1801

wwcot.com
dlrgroup.com

Santa Monica
Sacramento
Riverside
Palm Springs
Modesto
Shanghai, China

Copyright © 2010, DLR Group Inc. of California
DBA DLR Group WWCOT. All Rights Reserved

GLUMAC
engineers for a sustainable future™
18200 Von Karman Ave., Suite 100
Irvine, CA 92612
T. 949.833.8190 F. 949.833.0252
Job No.: 04.10.00861
Contact: JM
www.glumac.com

Public Agency Submittal:
Issued for Bidding:
Issued for Construction:

Revisions:

FOR CONSTRUCTION

REGISTERED PROFESSIONAL ENGINEER
RICHARD HOLZER
No. 22941
Exp. 9-30-12
MECHANICAL
STATE OF CALIFORNIA

Phase I
FOX ENTERTAINMENT PLAZA
3605 Market Street
Riverside, CA 92501

City of Riverside

CITY OF RIVERSIDE

3900 Main Street , Riverside, CA 92522

Phase: CD
Revised 02.10.11
DLR Group Project No.75-10603-00

Mechanical Lead Sheet

Issued Date: 05.20.11
Drawn By: -
Checked By: -

A- M000

Sheet №

File Path & Name: G:\2010 - Jobs\04.10.00861\Fox Elevator Annex\Arch\2011-01-11\75-10603-00 Riv Parking Garage 7_Phase 1.rvt
© WWCOT 2009 – Plotted 1/1/2011 2:24:38 PM

PACKAGED ROOFTOP AC UNIT SCHEDULE

TAG	MFR & MODEL	LOCATION	AREA SERVED	NOM. CAP. (TONS)	SUPPLY AIRFLOW (CFM)	SUPPLY MIN OSA (CFM)	SUPPLY ESP (IN.WG.)	SUPPLY HP	SUPPLY BHP	SUPPLY DRIVE	SUPPLY REFRIG	COOLING TOTAL (MBH)	COOLING SENS (MBH)	COOLING EAT DB/WB (°F)	COOLING LAT DB/WB (°F)	COOLING EER	COOLING SEER	COOLING IEER	HEATING INPUT (MBH)	HEATING OUTPUT (MBH)	HEATING SSE (%)	FILTER TYPE	FILTER MERV	ELECTRICAL V/PH	ELECTRICAL MCA (A)	ELECTRICAL MOCP (A)	UNIT SIZE (L"xW"xH")	OPER. WT. (LBS)	NOTES
AC-1	YORK ZJ150	ROOF	ENTIRE BUILDING	12.5	5000	500	1.0	5	4.5	BELT	R-410A	170.8	121.3	80/67	57.5/56.1	12.2	N/A	12.9	180	144	80	PLEATED	8	460/3	41.1	50	120x59x51	2200	ALL NOTES BELOW

NOTES
1. FUSED DISCONNECT PROVIDED BY ELEC CONTRACTOR.
2. COOLING CAPACITY BASED ON 95°F AMBIENT DB.
3. PROVIDE POWER EXHAUST FAN WITH FULLY MODULATING ECONOMIZER.
4. PROVIDE 11" VIBRATION ISOLATION SEISMIC ROOF CURB.
5. PROVIDE SMOKE DETECTOR ON THE SUPPLY FOR AUTOMATIC UNIT SHUTDOWN.
6. UNIT TO HAVE HORIZONTAL DISCHARGE FOR SUPPLY AND RETURN.
7. SEE 6/A-M201 FOR INSTALLATION DETAIL.
8. PROVIDE PROGRAMMABLE THERMOSTAT.

DX SPLIT SYSTEM FAN COIL UNIT SCHEDULE

TAG	MFR & MODEL	LOCATION / MOUNTING	AREA SERVED	TYPE	SUPPLY AIR (CFM)	OSA (CFM)	ESP (IN.WG.)	ELECTRICAL V/PH	ELECTRICAL MCA	ELECTRICAL FAN FLA	COOLING COIL TOTAL (MBH)	COOLING COIL SENS (MBH)	COOLING COIL EAT DB/WB (°F)	COOLING COIL LAT DB/WB (°F)	HEATING COIL TOTAL (MBH)	HEATING COIL EAT (°F)	HEATING COIL LAT (°F)	FILTER TYPE	FILTER MERV	UNIT SIZE (L"xW"xH")	OPER. WT. (LBS)	NOTES
FC-1	MITSUBISHI PEAD-12	CEILING	EQUIP. 102	CONCEALED DUCTED	350	0	0.5	208/1	1	0.57	12,000	12,000	80/67	N/A	N/A	N/A	N/A	WASHABLE	8	39x28x8	55	ALL NOTES BELOW

NOTES
1. FUSED DISCONNECT PROVIDED BY ELEC CONTRACTOR.
2. PROVIDE MATCHING OUTDOOR CONDENSER UNIT CU-1. REFER TO CONDENSER UNIT SCHEDULE.
3. SEE 7/A-M201 FOR INSTALLATION DETAIL.
4. PROVIDE WALL MOUNTED WIRED REMOTE CONTROLLER.
5. MFGR. TO PROVIDE BUILT-IN CONDENSATE PUMP PRE-WIRED IN FACTORY.
6. UNIT POWER THRU CU-1.
7. PROVIDE SECONDARY DRIP PAN. REFER TO PLUMBING DWGS FOR DRAIN DISCHARGE.

DIFFUSER AND GRILLE SCHEDULE

TAG	MFR	MODEL	DESCRIPTION	FACE TYPE	FACE SIZE (IN.)	COLOR (SEE NOTE #1)	MATERIAL	OBD	
A	KRUEGER	1240	SQUARE CEILING SUPPLY	MODULAR CORE	NECK SIZE +6"	WHITE	ALUMINUM	NO	1-6
B	KRUEGER	880	AEROBLADE SUPPLY GRILLE	3/4" SPACING, DOUBLE DEFL.	SEE PLAN	WHITE	STEEL	NO	1-5, 7
C	KRUEGER	580	AEROBLADE RETURN GRILLE	3/4" SPACING, 35° DEFL.	SEE PLAN	WHITE	STEEL	NO	1-5, 7, 8
D	KRUEGER	DFL	SLOT SUPPLY	SLOT	2 x 1" SLOT	WHITE	ALUMINUM	NO	1-2, 9-12
E	KRUEGER	1600	LINEAR BAR SUPPLY	1/8" BARS, 1/2" SPACING, 0° DEFL.	SEE PLAN	WHITE	ALUMINUM	YES	1-4, 7
F	KRUEGER	RA2	ROUND CEILING SUPPLY	4-CONE, ADJUSTABLE	VARIES	WHITE	STEEL	NO	1-4

NOTES
1. ANY GRILLE MOUNTED DIRECTLY ON EXPOSED DUCT SHALL MATCH COLOR OF DUCT (IF PAINTED) OR SHALL HAVE CLEAR ANODIZED FINISH (IF DUCT IS UNPAINTED).
2. ALL VISIBLE SURFACES AND DUCTWORK BEHIND FACE SHALL BE PAINTED FLAT BLACK.
3. COORDINATE WITH ARCHITECTURAL REFLECTED CEILING PLANS FOR BORDER TYPES.
4. NECK SIZE AND CFM SHOWN ON PLANS (E.G. 12x12-A-400 REFERS TO TAG "A" WITH 12x12 NECK AND 400 CFM).
5. PROVIDE MINIMUM 3"-HIGH RECTANGULAR/SQUARE TO ROUND TRANSITION AS REQUIRED. ROUND NECK AREA SHALL EQUAL OR EXCEED RECTANGULAR NECK AREA.
6. SEE 1/A-M201 FOR TYPICAL CEILING SUPPLY DIFFUSER INSTALLATION DETAIL.
7. SEE 3/A-M201 FOR TYPICAL SIDEWALL REGISTER INSTALLATION DETAIL.
8. SEE 2/A-M201 FOR TYPICAL CEILING RETURN AIR REGISTER INSTALLATION DETAIL.
9. HORIZONTAL (HT) PATTERN CONTROLLERS.
10. PROVIDE MANUFACTURER'S INSULATED PLENUM.
11. PLENUM CONNECTION SIZE, SLOT LENGTH, AND CFM SHOWN ON PLANS (E.G. 8-120-A-2000 REFERS TO TAG "A" WITH 8" ROUND CONNECTION(S), 120" CONTINUOUS SLOT LENGTH AND 2000 CFM).
12. INSTALL SLOT DIFFUSER PER MANUFACTURER'S INSTRUCTIONS.

AIR-COOLED CONDENSER UNIT SCHEDULE

TAG	MFR & MODEL	LOCATION	EQUIP. SERVED	NOM. CAP. (TONS)	EER	SEER	REFRIG	ELECTRICAL V/PH	ELECTRICAL MCA (A)	ELECTRICAL MOCP (A)	UNIT SIZE (L"Xw"xH")	OPER. WT. (LBS)	NOTES
CU-1	MITSUBISHI PUY-12	ROOF	FC-1	1.0	9.7	13.8	R-410A	208/1	13	15	32x12x24	90	ALL NOTES BELOW

NOTES
1. FUSED DISCONNECT PROVIDED BY ELEC CONTRACTOR.
2. CAPACITY RATED AT ARI STANDARD CONDITIONS.
3. PROVIDE VIBRATION ISOLATION PER SPECIFICATIONS.
4. SEE 8/A-M201 FOR INSTALLATION DETAIL.

Bayley Construction
3730 S. Susan St.
Suite 200
Santa Ana, CA, 92704
CA. License 734880
Tel 714-540-8863
Fax 714-556-8863

Bayley Construction
8005 S.E. 28th St.
P.O. Box 9004
Mercer Island, WA, 98040
WA. License
BAYLEC034JC
Tel 206-621-8884
Fax 206-343-7728

DLR Group WWCOT
Architecture Engineering Planning Interiors

4280 Latham Street, Suite H
Riverside, California 92501
T 951.682.0470
F 951.682.1801

wwcot.com
dlrgroup.com

Santa Monica
Sacramento
Riverside
Palm Springs
Modesto
Shanghai, China

Copyright © 2010, DLR Group Inc. of California
DBA DLR Group WWCOT. All Rights Reserved

GLUMAC
engineers for a sustainable future
18200 Von Karman Ave., Suite 100
Irvine, CA 92612
T. 949.833.8190 F. 949.833.0252
Job No.: 04.10.00861
Contact: JM
www.glumac.com

Public Agency Submittal:
Issued for Bidding:
Issued for Construction:

Revisions:

1 ---/2011 ---

FOR CONSTRUCTION

REGISTERED PROFESSIONAL ENGINEER
RICHARD HOLZER
No. 22941
Exp. 9-30-12
MECHANICAL
STATE OF CALIFORNIA

Phase I
FOX ENTERTAINMENT PLAZA
3605 Market Street
Riverside, CA 92501

City of Riverside

CITY OF RIVERSIDE

3900 Main Street , Riverside, CA 92522

Phase: CD
Revised 02.10.11
DLR Group Project No.75-10603-00

Mechanical Equipment Schedules

Issued Date: 05.20.11
Drawn By: -
Checked By: -

A- M001
Sheet №

File Path & Name: G:\2010 - Jobs\04.10.00861\Fox Elevator Annex\Arch\2011-01-11\75-10603-00 Riv Parking Garages 7_Phase 1.rvt
© WWCOT 2009 -- Plotted 1/11/2011 2:24:38 PM

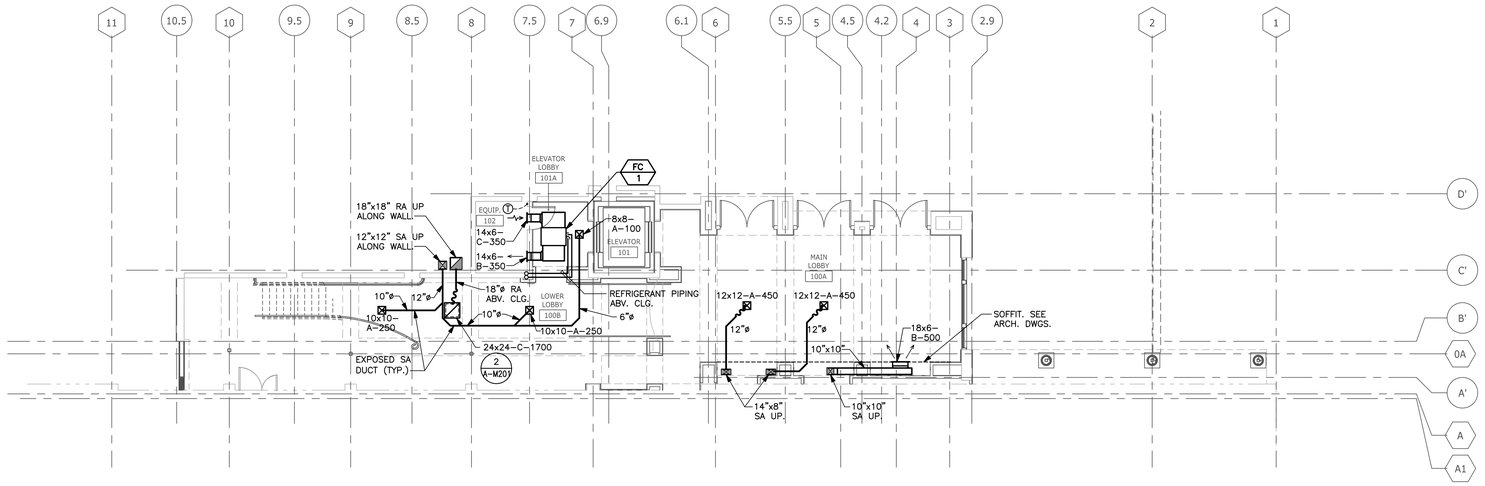

MAIN / ORCHESTRA LEVEL FLOOR PLAN - MECHANICAL

Scale 1/8"= 1'-0" 1

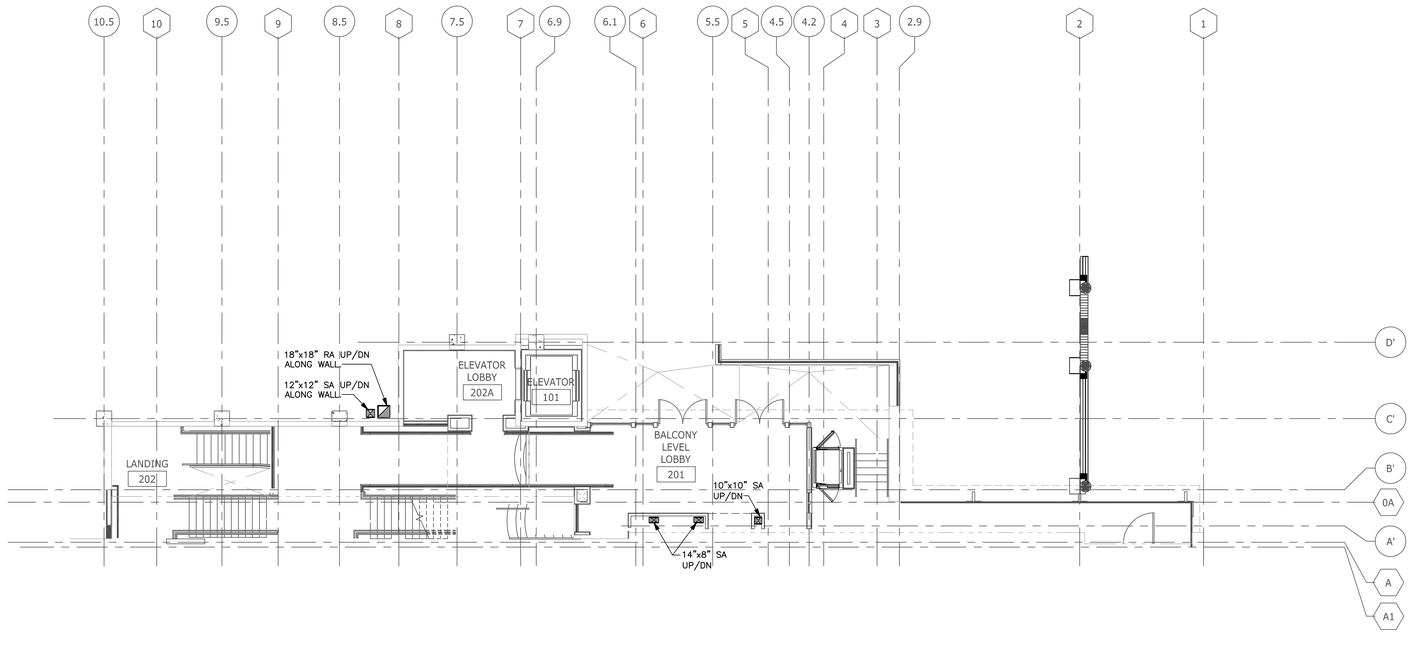

BALCONY LEVEL FLOOR PLAN - MECHANICAL

Scale 1/8"= 1'-0" 2

Bayley Construction
3730 S. Susan St.
Suite 200
Santa Ana, CA. 92704
CA. License 734880
Tel 714-540-8863
Fax 714-556-8863

Bayley Construction
8005 S.E. 28th St.
P.O. Box 9004
Mercer Island, WA. 98040
WA. License
BAYLEC034JC
Tel 206-621-8884
Fax 206-343-7728

BAYLEY CONSTRUCTION

DLR Group
WWCOT
Architecture Engineering Planning Interiors

4280 Latham Street, Suite H
Riverside, California 92501
T 951.682.0470
F 951.682.1801

wwcot.com
dlrgroup.com

Santa Monica
Sacramento
Riverside
Palm Springs
Modesto
Shanghai, China

Copyright © 2010, DLR Group Inc. of California
DBA DLR Group WWCOT. All Rights Reserved

GLUMAC
engineers for a sustainable future

18200 Von Karman Ave., Suite 100
Irvine, CA 92612
T. 949.833.8190 F. 949.833.0252

Job No.: 04.10.00861
Contact: JM
www.glumac.com

Public Agency Submittal:
Issued for Bidding:
Issued for Construction:

Revisions:

FOR CONSTRUCTION

REGISTERED PROFESSIONAL ENGINEER
RICHARD HOLZER, P.E.
No. 22941
Exp. 9-30-12
MECHANICAL
STATE OF CALIFORNIA

Phase I
FOX
ENTERTAINMENT
PLAZA
3605 Market Street
Riverside, CA 92501

City of Riverside

CITY OF RIVERSIDE

3900 Main Street , Riverside, CA 92522

Phase: CD
Revised 02.10.11
DLR Group Project No.75-10603-00

Main/Orchestra &
Balcony Level Floor Plan
Mechanical

Issued Date: 05.20.11
Drawn By: -
Checked By: -

A- M101
Sheet №

File Path & Name: G:\2010 - Jobs\04.10.00861\Fox Elevator Annex\Arch\2011-01-11\75-10603-00 Riv Parking Garage 7_Phase I.rvt
© WWCOT 2009 -- Plotted 1/11/2011 2:24:38 PM

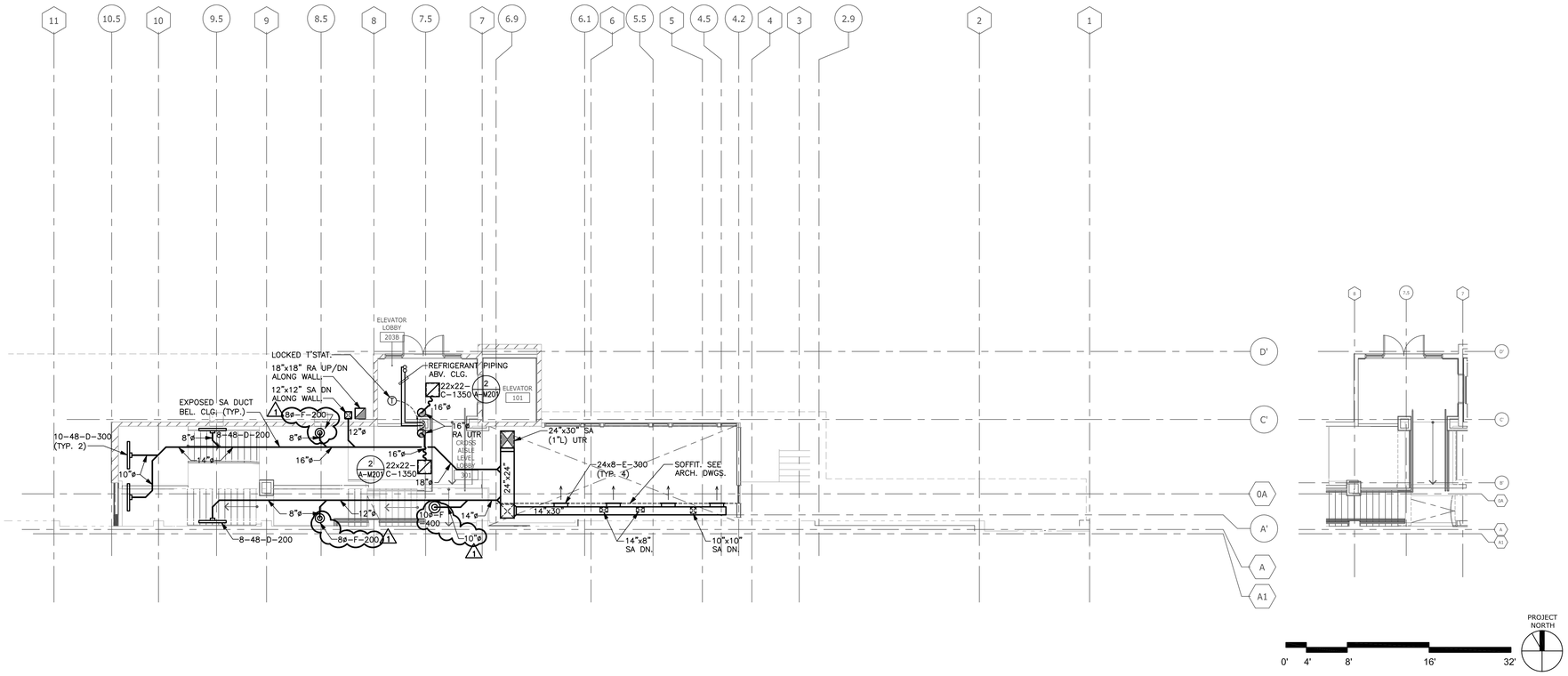

CROSS-AISLE LEVEL FLOOR PLAN - MECHANICAL

Scale 1/8"= 1'-0" (1)

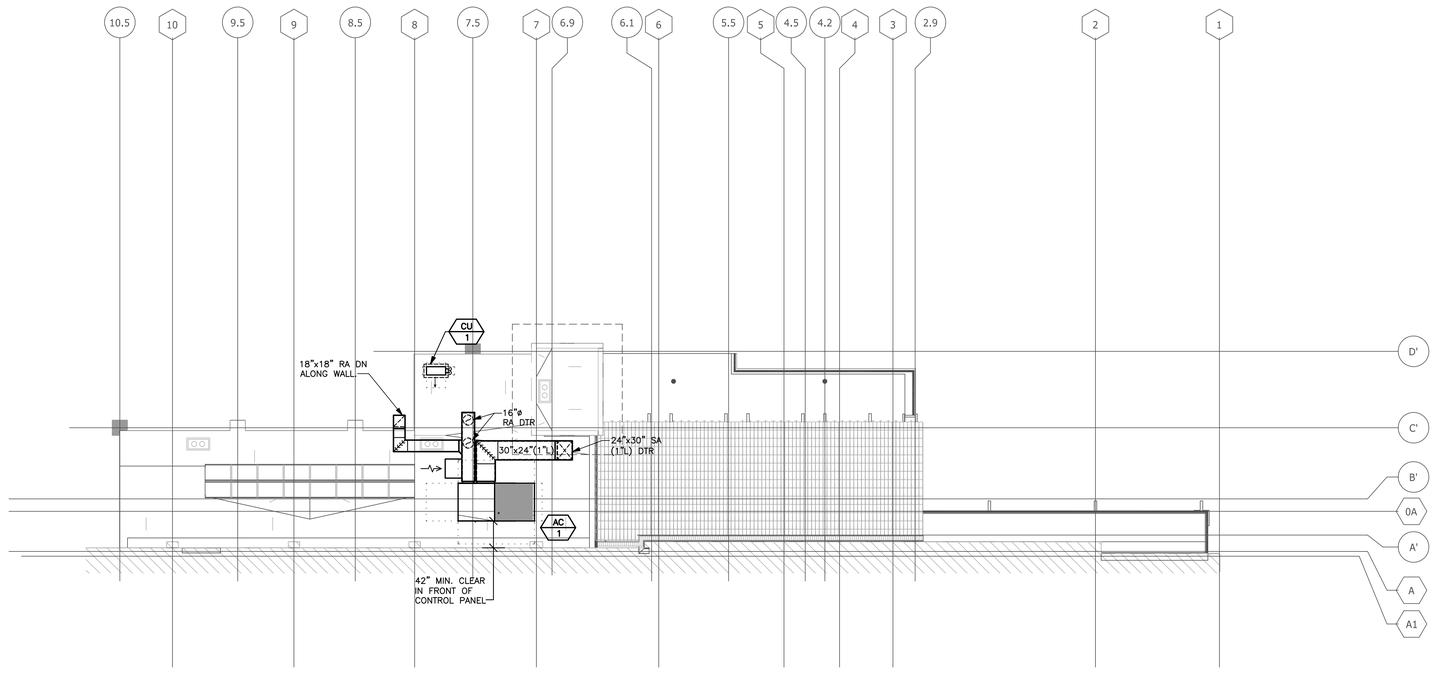

ROOF PLAN - MECHANICAL

Scale 1/8"= 1'-0" (2)

Bayley Construction
3730 S. Susan St.
Suite 200
Santa Ana, CA. 92704
CA. License 734880
Tel 714-540-8863
Fax 714-556-8863

Bayley Construction
8005 S.E. 28th St.
P.O. Box 9004
Mercer Island, WA. 98040
WA. License
BAYLEC034JC
Tel 206-621-8884
Fax 206-343-7728

DLR Group WWCOT
Architecture Engineering Planning Interiors

4280 Latham Street, Suite H
Riverside, California 92501
T 951.682.0470
F 951.682.1801

wwcot.com
dlrgroup.com

Santa Monica
Sacramento
Riverside
Palm Springs
Modesto
Shanghai, China

Copyright © 2010, DLR Group Inc. of California
DBA DLR Group WWCOT. All Rights Reserved

GLUMAC
engineers for a sustainable future™
18200 Von Karman Ave., Suite 100
Irvine, CA 92612
T. 949.833.8190 F. 949.833.0252
Job No.: 04.10.00861
Contact: JM
www.glumac.com

Public Agency Submittal:
Issued for Bidding:
Issued for Construction:

Revisions:

#		
A	4/8/2011	Owner Changes
C	5/12/2011	Building Department Resubmittal
1	---/2011	---

FOR CONSTRUCTION

REGISTERED PROFESSIONAL ENGINEER
RICHARD HOLZER, P.E.
No. 22941
Exp. 9-30-12
MECHANICAL
STATE OF CALIFORNIA

Phase I
FOX ENTERTAINMENT PLAZA
3605 Market Street
Riverside, CA 92501

City of Riverside

CITY OF RIVERSIDE

3900 Main Street , Riverside, CA 92522

Phase: CD
Revised 02.10.11
DLR Group Project No.75-10603-00

Cross-Aisle Level & Roof Plan - Mechanical

Issued Date: 05.20.11
Drawn By: -
Checked By: -

A- M102
Sheet №

File Path & Name: G:\2010 - Jobs\04.10.00861\Fox Elevator Annex\Arch\2011-01-11\75-10603-00 Riv Parking Garage 7_Phase I.rvt
© WWCOT 2009 -- Plotted 1/11/2011 2:24:38 PM

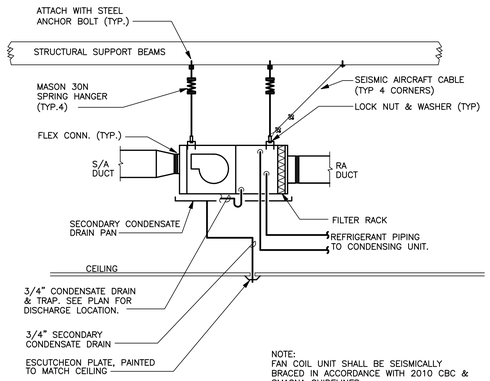

NOTE:
FAN COIL UNIT SHALL BE SEISMICALLY BRACED IN ACCORDANCE WITH 2010 CBC & SMACNA GUIDELINES.
CONTRACTOR SHALL SUBMIT SEISMIC DESIGN PER SPECIFICATION.

7 DUCTED FAN COIL UNIT DETAIL
SCALE: NONE

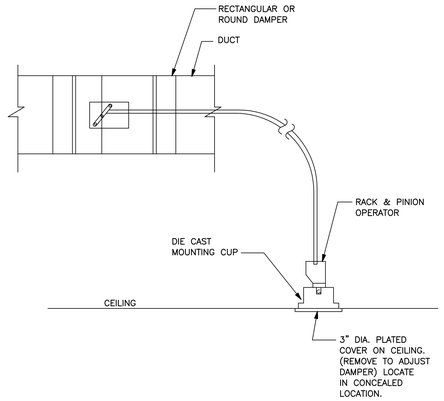

4 YOUNG REGULATOR DETAIL
SCALE: NONE

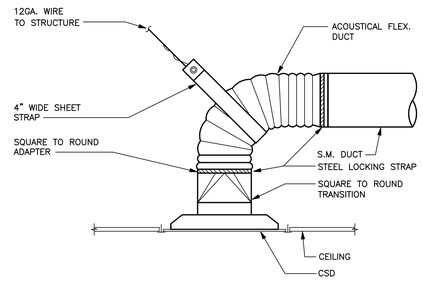

1 SQUARE CEILING DIFFUSER
SCALE: NONE

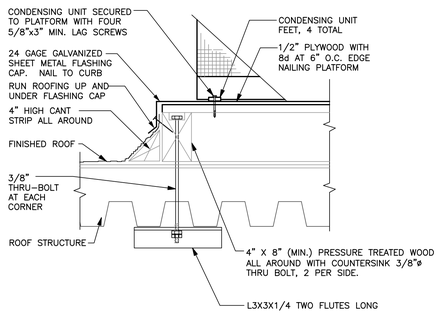

8 CONDENSING UNIT DETAIL
SCALE: NONE

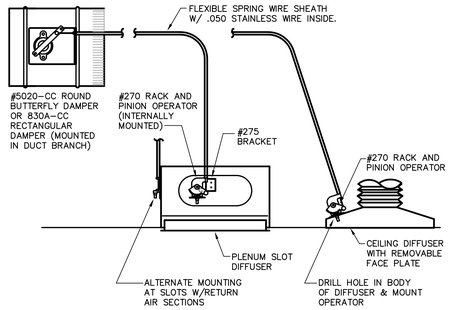

NOTE:

1. ALL VOLUME DAMPERS ABOVE SHEET ROCK OR INACCESSIBLE CEILING SHALL HAVE REMOTE OPERATORS.
2. PART NUMBERS ARE BASED ON YOUNG REGULATOR COMPANY PRODUCT.

5 REMOTE VOLUME DAMPER DETAIL
SCALE: NONE

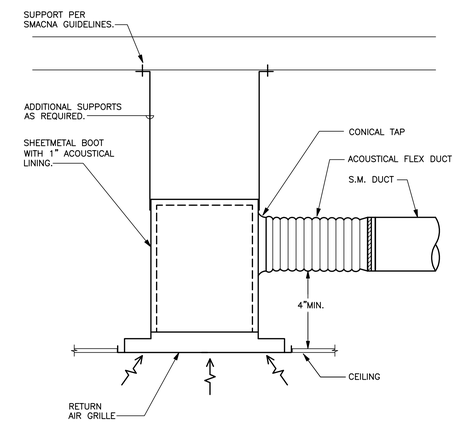

2 RETURN AIR ACOUSTICAL BOOT DETAIL
SCALE: NONE

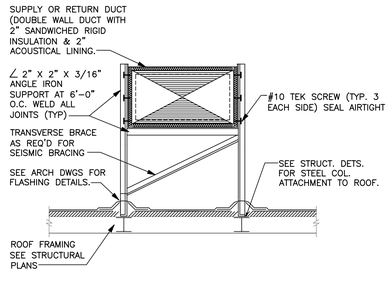

5 ROOF MOUNTED DUCT SUPPORT
SCALE: NONE

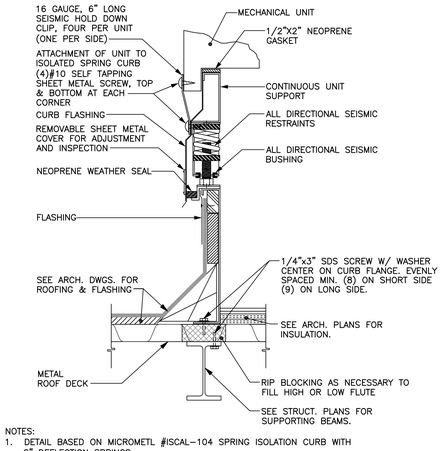

NOTES:

1. DETAIL BASED ON MICROMETL #ISCAL-104 SPRING ISOLATION CURB WITH 2" DEFLECTION SPRINGS.
2. COORDINATE EXACT ROOF CONSTRUCTION MEANS AND METHODS WITH ARCHITECTURAL AND STRUCTURAL PLANS.

AC-1

6 VIBRATION ISOLATION CURB
SCALE: NONE

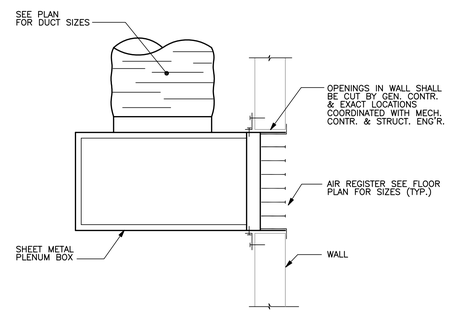

3 WALL MOUNTED AIR REGISTER
SCALE: NONE

File Path & Name: G:\2010 - Jobs\04.10.00861\Fox Elevator Annex\Arch\2011-01-11\75-10603-00 Riv Parking Garages 7_Phase 1.rvt
© WWCOT 2009 -- Plotted 1/11/2011 2:24:38 PM

Bayley Construction
3730 S. Susan St.
Suite 200
Santa Ana, CA. 92704
CA. License 734880
Tel 714-540-8863
Fax 714-556-8863

Bayley Construction
8005 S.E. 28th St.
P.O. Box 9004
Mercer Island, WA. 98040
WA. License
BAYLEC034JC
Tel 206-621-8884
Fax 206-343-7728

BAYLEY CONSTRUCTION

DLR Group WWCOT
Architecture Engineering Planning Interiors

4280 Latham Street, Suite H
Riverside, California 92501
T 951.682.0470
F 951.682.1801

wwcot.com
dlrgroup.com

Santa Monica
Sacramento
Riverside
Palm Springs
Modesto
Shanghai, China

Copyright © 2010, DLR Group Inc. of California
DBA DLR Group WWCOT. All Rights Reserved

GLUMAC
engineers for a sustainable future
18200 Von Karman Ave., Suite 100
Irvine, CA 92612
T. 949.833.8190 F. 949.833.0252
Job No.: 04.10.00861
Contact: JM
www.glumac.com

Public Agency Submittal:
Issued for Bidding:
Issued for Construction:

Revisions:

REGISTERED PROFESSIONAL ENGINEER
RICHARD HOLZER
No. 22941
Exp. 9-30-12
MECHANICAL
STATE OF CALIFORNIA

FOR CONSTRUCTION

Phase I
FOX ENTERTAINMENT PLAZA
3605 Market Street
Riverside, CA 92501

City of Riverside

CITY OF RIVERSIDE

3900 Main Street , Riverside, CA 92522

Phase: CD
Revised 02.10.11
DLR Group Project No.75-10603-00

Mechanical Details

Issued Date: 05.20.11
Drawn By: -
Checked By: -

A- M201

Sheet №

ENVELOPE MANDATORY MEASURES: NONRESIDENTIAL — ENV-MM

Project Name: *Phase I Fox Lobby Expansion* — Date: *2/9/2011*

DESCRIPTION

Building Envelope Measures:

§118(a):	Installed insulating material shall have been certified by the manufacturer to comply with the California Quality Standards for insulating material, Title 20 Chapter 4, Article 3.
§118(c):	All Insulating Materials shall be installed in compliance with the flame spread rating and smoke density requirements of Sections 2602 and 707 of Title 24, Part 2.
§118(f):	The opaque portions of framed demising walls in nonresidential buildings shall have insulation with an installed R-value of no less than R-13 between framing members.
§117(a):	All Exterior Joints and openings in the building that are observable sources of air leakage shall be caulked, gasketed, weatherstripped or otherwise sealed.
§116(a) 1:	Manufactured fenestration products and exterior doors shall have air infiltration rates not exceeding 0.3 cfm/ft.^{2} of window area, 0.3 cfm/ft.^{2} of door area for residential doors, 0.3 cfm/ft.^{2} of door area for nonresidential single doors (swinging and sliding), and 1.0 cfm/ft.^{2} for nonresidential double doors (swinging).
§116(a) 2:	Fenestration U-factor shall be rated in accordance with NFRC 100, or the applicable default U-factor.
§116(a) 3:	Fenestration SHGC shall be rated in accordance with NFRC 200, or NFRC 100 for site-built fenestration, or the applicable default SHGC.
§116(b):	Site Constructed Doors, Windows and Skylights shall be caulked between the unit and the building, and shall be weatherstripped (except for unframed glass doors and fire doors).

PERFORMANCE CERTIFICATE OF COMPLIANCE (Part 3 of 3) — PERF-1C

Project Name: *Phase I Fox Lobby Expansion* — Date: *2/9/2011*

ZONE INFORMATION

System Name	Zone Name	Occupancy Type	Floor Area (sqft.)	Inst. LPD (W/sf)[1]	Ctrl. Credits (W/sf)[2]	Allowed LPD Area (W/sf)[3]	Allowed LPD Tailored (W/sf)[4]	Proc. Loads (W/sf)
AC-1	*Lobbies*	*Lobby, Main Entry*	*2,908*	*1.500*				

Notes: 1. See LTG-1C (items marked with asterisk, see LTG-1C by others). 2. See LTG-2C. 3. See LTG-3C (by others). 4. See LTG-4C. Items above require special documentation.

EXCEPTIONAL CONDITIONS COMPLIANCE CHECKLIST

The local enforcement agency should pay special attention to the items specified in this checklist. These items require special written justification and documentation, and special verification to be used with the performance approach. The local enforcement agency determines the adequacy of the justifications, and may reject a building or design that otherwise complies based on the adequacy of the special justification and documentation submitted.

The exceptional features listed in this performance approach application have specifically been reviewed. Adequate written justification and documentation for their use have been provided by the applicant.

Authorized Signature or Stamp _____

PERFORMANCE CERTIFICATE OF COMPLIANCE (Part 2 of 3) — PERF-1C

Project Name: *Phase I Fox Lobby Expansion* — Date: *2/9/2011*

ANNUAL TDV ENERGY USE SUMMARY (kBtu/sqft-yr)

Energy Component	Standard Design	Proposed Design	Compliance Margin
Space Heating	*19.92*	*20.40*	*-0.48*
Space Cooling	*138.80*	*124.33*	*14.47*
Indoor Fans	*140.43*	*144.41*	*-3.97*
Heat Rejection	*0.00*	*0.00*	*0.00*
Pumps & Misc.	*0.00*	*0.00*	*0.00*
Domestic Hot Water	*0.00*	*0.00*	*0.00*
Lighting	*105.19*	*105.19*	*0.00*
Receptacle	*32.16*	*32.16*	*0.00*
Process	*0.00*	*0.00*	*0.00*
Process Lighting	*0.00*	*0.00*	*0.00*
TOTALS	*436.49*	*426.48*	*10.01*

Percent better than Standard: *2.3 %* (*2.3 %* excluding process)

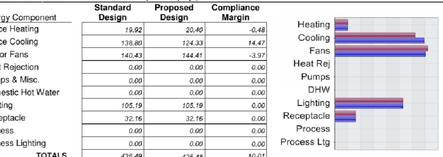

BUILDING COMPLIES

GENERAL INFORMATION

Building Orientation	*(N) 0 deg*	Conditioned Floor Area	*2,908*	sqft.
Number of Stories	*1*	Unconditioned Floor Area	*0*	sqft.
Number of Systems	*1*	Conditioned Footprint Area	*0*	sqft.
Number of Zones	*1*	Natural Gas Available On Site	*Yes*	

	Orientation	Gross Area		Glazing Area		Glazing Ratio
Front Elevation	*(N)*	*2,599*	sqft.	*589*	sqft.	*22.7 %*
Left Elevation	*(E)*	*500*	sqft.	*149*	sqft.	*29.8 %*
Rear Elevation	*(S)*	*0*	sqft.	*0*	sqft.	*0.0 %*
Right Elevation	*(W)*	*552*	sqft.	*150*	sqft.	*27.2 %*
Total		*3,651*	sqft.	*888*	sqft.	*24.3 %*
Roof		*1,712*	sqft.	*124*	sqft.	*7.2 %*

	Standard		Proposed		
Prescriptive Lighting Power Density	*1.500*	W/sqft.	*1.500*	W/sqft.	Prescriptive Values for Comparison only. See LTG-1C for allowed LPD.
Prescriptive Envelope TDV Energy	*174,690*		*191,319*		

Remarks:

PERFORMANCE CERTIFICATE OF COMPLIANCE (Part 1 of 3) — PERF-1C

Project Name: *Phase I Fox Lobby Expansion* — Date: *2/9/2011*

Project Address	Climate Zone	Total Cond. Floor Area	Addition Floor Area
3605 Market Street Riverside	*CA Climate Zone 10*	*2,908*	*n/a*

GENERAL INFORMATION

Building Type: ☑ Nonresidential ☐ High-Rise Residential ☐ Hotel/Motel Guest Room ☐ Relocatable - indicate specific climate zone ☐ all climates

Phase of Construction: ☑ New Construction ☐ Addition ☐ Alteration

STATEMENT OF COMPLIANCE

This certificate of compliance lists the building features and specifications needed to comply with Title 24, Parts 1 and 6 of the California Code of Regulations. This certificate applies only to a Building using the performance compliance approach.

The documentation author hereby certifies that the documentation is accurate and complete.

Documentation Author

Name	*Richard Holzer*	Signature	
Company		Date	*2/9/2011*
Address	*18200 Von Karman Suite 100*	Phone	*949-833-8190*
City/State/Zip	*Irvine, CA 92612*		

The Principal Designer hereby certifies that the proposed building design represented in this set of construction documents is consistent with the other compliance forms and worksheets, with the specifications, and with any other calculations submitted with this permit application. The proposed building has been designed to meet the energy efficiency requirements contained in sections 110, 116 through 118, and 140 through 149 of Title 24, Part 6. Please check one:

ENV.	LTG.	MECH.	
☐	☐	☐	I hereby affirm that I am eligible under the provisions of Division 3 of the Business and Professions Code to sign this document as the person responsible for its preparation; and that I am licensed in the State of California as a civil engineer, mechanical engineer, electrical engineer, or I am a licensed architect.
☐	☐	☐	I affirm that I am eligible under the provisions of Division 3 of the Business and Professions Code by section 5537.2 or 6737.3 to sign this document as the person responsible for its preparation; and that I am a licensed contractor performing this work.
☐	☐	☐	I affirm that I am eligible under Division 3 of the Business and Professions Code to sign this document because it pertains to a structure or type of work described as exempt pursuant to Business and Professions Code Sections 5537, 5538 and 6737.1.

Principal Envelope Designer

Name	*DLR Group WWCOT*	Signature	
Company	*DLR Group WWCOT*	Date	
Address	*4280 Latham Street, Suite H*	License #	
City/State/Zip	*Riverside, CA 92501*	Phone	*951-682-0470*

Principal Mechanical Designer

Name	*Glumac*	Signature	
Company	*Glumac*	Date	
Address	*18200 Von Karman Avenue, Suite 100*	License #	
City/State/Zip	*Irvine, CA 92612*	Phone	*949-833-8190*

Principal Lighting Designer

Name		Signature	
Company	*Lighting Compliance Not In The Scope Of Title Submittal*	Date	
Address		License #	
City/State/Zip		Phone	

INSTRUCTIONS TO APPLICANT COMPLIANCE & WORKSHEETS (check box if worksheets are included)

☑	ENV-1C	Certificate of Compliance. Required on plans.	☑	MECH-1C	Certificate of Compliance. Required on plans.
☐	LTG-1C	Certificate of Compliance. Required on plans.	☑	MECH-2C	Air/Water Side/Service Hot Water & Pool Requirements.
☐	LTG-2C	Lighting Controls Credit Worksheet.	☑	MECH-3C	Mechanical Ventilation and Reheat.
☐	LTG-3C	Indoor Lighting Power Allowance.	☑	MECH-5C	Mechanical Equipment Details.

CERTIFICATE OF COMPLIANCE AND FIELD INSPECTION ENERGY CHECKLIST (Part 3 of 3) — ENV-1C

Project Name: *Phase I Fox Lobby Expansion* — Date: *2/9/2011*

Required Acceptance Tests

Designer:

This form is to be used by the designer and attached to the plans. Listed below is the acceptance test for Envelope Fenestrations system. The designer is required to check the acceptance tests and list all the fenestration products that require an acceptance test. If all the site-built fenestration of a certain type requires a test, list the different fenestration products and the number of systems. The NA7 Section in the Appendix of the Nonresidential Reference Appendices Manual describes the test. Since this form will be part of the plans, completion of this section will allow the responsible party to budget for the scope of work appropriately.

Enforcement Agency:

Systems Acceptance. Before Occupancy Permit is granted for a newly constructed building or space or whenever new fenestration is installed in the building or space shall be certified as meeting the Acceptance Requirements.

The ENV-2A form is not considered a complete form and is not to be accepted by the enforcement agency unless the boxes are checked and/or filled and signed. In addition, a Certificate of Acceptance forms shall be submitted to the enforcement agency that certifies plans, specifications, installation certificates, and operating and maintenance information meet the requirements of §10-103(b) of Title 24 Part 6. The field inspector must receive the properly filled out and signed forms before the building can receive final occupancy. A copy of the ENV-2A for each different fenestration product line must be provided to the owner of the building for their records.

Test Description: Fenestration Products Name or ID Requiring Testing or Verification	Area of like Products	ENV-2A: Building Envelope Acceptance Test	Test Performed By:
PPG SOLARBAN 60 (2) Clear	*888*	☑	
Project skylight	*124*	☑	
		☐	
		☐	
		☐	
		☐	
		☐	
		☐	
		☐	
		☐	
		☐	
		☐	
		☐	
		☐	
		☐	
		☐	
		☐	
		☐	
		☐	
		☐	

CERTIFICATE OF COMPLIANCE AND FIELD INSPECTION ENERGY CHECKLIST (Part 2 of 3) — ENV-1C

Project Name: *Phase I Fox Lobby Expansion* — Date: *2/9/2011*

ROOFING PRODUCT (COOL ROOFS)

(Note If the roofing product is not CRRC certified, this compliance approach cannot be used). Go to Overall Envelope Approach or Performance Approach.

CHECK APPLICABLE BOX BELOW IF EXEMPT FROM THE ROOFING PRODUCT "COOL ROOF" REQUIREMENTS:

	Pass	Fail[1]	N/A
☐ Roofing compliance not required in Climate Zones 1 and16 with a Low-Sloped, 2:12 pitch or less.	☐	☐	☐
☐ Roofing compliance not required in Climate Zone 1 with a Steep-Sloped with less than 5 lb/ft^2. Greater than 2:12 pitch.	☐	☐	☐
☐ Low-sloped Wood framed roofs in Climate Zones 3 and 5 are exempted, solar reflectance and thermal emittance or SRI that have a U-factor of 0.039 or lower. See Opaque Surface Details roof assembly, Column H of ENV-2C.	☐	☐	☐
☐ Low-sloped Metal building roofs in Climate Zone 3 and 5 are exempted, solar reflectance and thermal emittance or SRI that have a U-factor of 0.048 or lower. See Opaque Surface Details roof assembly below, Column H of ENV-2C.	☐	☐	☐
☐ The roof area covered by building integrated photovoltaic panels and building integrated solar thermal panels are exempted. Solar reflectance and thermal emittance or SRI, see spreadsheet calculator at www.energy.ca.gov/title24/	☐	☐	☐
☐ Roof constructions that have thermal mass over the roof membrane with a weight of at least 25 lb/ft^2 are exempt from the Cool Roof criteria below.	☐	☐	☐
☐ High-rise residential buildings and hotels and motels with low-sloped roofs in Climate Zones 1 through 9, 12 and 16 are exempted from the low-sloped roofing criteria.	☐	☐	☐

1. If Fail then describe on this page of the Inspection Checklist Form and take appropriate action to correct. Verify building plans if necessary.

CRRC Product ID Number[1]	Roof Slope ≤ 2:12	> 2:12	Product Weight < 5lb/ft^2	≥ 5lb/ft^2	Product Type[2]	Aged Solar Reflectance[3]	Thermal Emmitance	SRI[5]	Pass	Fail[6]
	☐	☐	☐	☐		☐ [4]			☐	☐
	☐	☐	☐	☐		☐ [4]			☐	☐
	☐	☐	☐	☐		☐ [4]			☐	☐
	☐	☐	☐	☐		☐ [4]			☐	☐
	☐	☐	☐	☐		☐ [4]			☐	☐
	☐	☐	☐	☐		☐ [4]			☐	☐

1. The CRRC Product ID Number can be obtained from the Cool Roof Rating Council's Rated Product Directory at www.coolroofs.org/products/search.php
2. Indicate the type of product is being used for the roof top, i.e. single-ply roof, asphalt roof, metal roof, etc.
3. If the Aged Reflectance is not available in the Cool Roof Rating Council's Rated Product Directory then use the Initial Reflectance value from the same directory and use the equation $(0.2+0.7\rho_{initial} - 0.2)$ to obtain a calculated aged value. Where ρ is the Initial Solar Reflectance from the Cool Roof Rating Council's Rated Product Directory.
4. Check box if the Aged Reflectance is a calculated value using the equation above.
5. The SRI value needs to be calculated from a spreadsheet calculator at http://www.energy.ca.gov/title24s/
6. If Fail then describe on this page of the Inspection Checklist Form and take appropriate action to correct. Verify building plans if necessary.

To apply **Liquid Field Applied Coatings**, the coating must be applied across the entire roof surface and meet the dry mil thickness or coverage recommended by the coatings manufacturer and meet minimum performance requirements listed in §118(i)4. Select the applicable coating:

☐ Aluminum-Pigmented Asphalt Roof Coating ☐ Cement-Based Roof Coating ☐ Other _____

Discrepancies:

CERTIFICATE OF COMPLIANCE AND FIELD INSPECTION ENERGY CHECKLIST (Part 1 of 3) — ENV-1C

Project Name: *Phase I Fox Lobby Expansion* — Date: *2/9/2011*

Project Address	Climate Zone	Total Cond. Floor Area	Addition Floor Area
3605 Market Street Riverside	*10*	*2,908*	*n/a*

GENERAL INFORMATION

Building Type: ☑ Nonresidential ☐ High-Rise Residential ☐ Hotel/Motel Guest Room ☐ Schools (Public School) ☐ Relocatable Public School Bldg. ☑ Conditioned Spaces ☐ Unconditioned Spaces

☐ Skylight Area for Large Enclosed Space ≥ 8000 ft^2 (If checked include the ENV-4C with submittal)

Phase of Construction: ☑ New Construction ☐ Addition ☐ Alteration

Approach of Compliance: ☐ Component ☑ Overall Envelope ☐ Unconditioned (file affidavit)

Front Orientation; N, E, S, W or in Degrees: *0 deg*

FIELD INSPECTION ENERGY CHECKLIST

OPAQUE SURFACE DETAILS / INSULATION

Tag:ID[1]	Assembly Type[2]	Area (ft^2)	Orientation N, E, S, W	U-Factor	Cavity R-Value	Exterior R-Value	Exterior Furring[3]	Interior R-Value	Interior Furring[3]	Joint Appendix 4	Condition Status[4]	Pass	Fail[5]
9	*Roof*	*912*	*(N)*	*0.031*	*None*	*30.0*	*None*			*4.2.6-A5*	*New*	☐	☐
10	*Roof*	*400*	*(N)*	*0.036*	*R-13*	*18.0*	*None*			*4.2.5-A24*	*New*	☐	☐
11	*Wall*	*389*	*(N)*	*0.620*	*None*					*4.3.5-A8*	*New*	☐	☐
12	*Wall*	*67*	*(N)*	*0.620*	*None*					*4.3.5-A8*	*New*	☐	☐
13	*Roof*	*276*	*(N)*	*0.031*	*None*	*30.0*	*None*			*4.2.6-A5*	*New*	☐	☐
												☐	☐
												☐	☐
												☐	☐
												☐	☐
												☐	☐
												☐	☐

1. See Instructions in the Nonresidential Compliance Manual, page 3-96.
2. If Fail, then describe on Page 2 of the Inspection Checklist Form and take appropriate action to correct. A fail does not meet compliance.

FENESTRATION SURFACE DETAILS

Tag:ID[1]	Fenestration Type[2]	Area (ft^2)	Orientation N, E, S, W	Max U-Factor	U-Factor Source[3]	Max (R)SHGC	SHGC Source[3]	Overhang	Conditions Status[4]	Pass	Fail[5]
9	*Window*	*80*	*(N)*	*0.290*	*COG*	*0.380*	*COG*	☐	*New*	☐	☐
								☐		☐	☐
								☐		☐	☐
								☐		☐	☐
								☐		☐	☐
								☐		☐	☐
								☐		☐	☐
								☐		☐	☐
								☐		☐	☐
								☐		☐	☐

1. See Instructions in the Nonresidential Compliance Manual, page 3-96.
2. If Fail then describe on Page 2 of the Inspection Checklist Form and take appropriate action to correct. Verify building plans if necessary.

CERTIFICATE OF COMPLIANCE AND FIELD INSPECTION ENERGY CHECKLIST (Part 1 of 3) — ENV-1C

Project Name: *Phase I Fox Lobby Expansion* — Date: *2/9/2011*

Project Address	Climate Zone	Total Cond. Floor Area	Addition Floor Area
3605 Market Street Riverside	*10*	*2,908*	*n/a*

GENERAL INFORMATION

Building Type: ☑ Nonresidential ☐ High-Rise Residential ☐ Hotel/Motel Guest Room ☐ Schools (Public School) ☐ Relocatable Public School Bldg. ☑ Conditioned Spaces ☐ Unconditioned Spaces

☐ Skylight Area for Large Enclosed Space ≥ 8000 ft^2 (If checked include the ENV-4C with submittal)

Phase of Construction: ☑ New Construction ☐ Addition ☐ Alteration

Approach of Compliance: ☐ Component ☑ Overall Envelope ☐ Unconditioned (file affidavit)

Front Orientation; N, E, S, W or in Degrees: *0 deg*

FIELD INSPECTION ENERGY CHECKLIST

OPAQUE SURFACE DETAILS / INSULATION

Tag:ID[1]	Assembly Type[2]	Area (ft^2)	Orientation N, E, S, W	U-Factor	Cavity R-Value	Exterior R-Value	Exterior Furring[3]	Interior R-Value	Interior Furring[3]	Joint Appendix 4	Condition Status[4]	Pass	Fail[5]
1	*Wall*	*225*	*(N)*	*0.620*	*None*					*4.3.5-A8*	*New*	☐	☐
2	*Wall*	*177*	*(E)*	*0.620*	*None*					*4.3.5-A8*	*New*	☐	☐
3	*Wall*	*96*	*(N)*	*0.620*	*None*					*4.3.5-A8*	*New*	☐	☐
4	*Wall*	*90*	*(W)*	*0.620*	*None*					*4.3.5-A8*	*New*	☐	☐
5	*Wall*	*1,219*	*(N)*	*0.620*	*None*					*4.3.5-A8*	*New*	☐	☐
6	*Wall*	*312*	*(W)*	*0.620*	*None*					*4.3.5-A8*	*New*	☐	☐
7	*Wall*	*24*	*(N)*	*0.620*	*None*					*4.3.5-A8*	*New*	☐	☐
8	*Wall*	*174*	*(E)*	*0.620*	*None*					*4.3.5-A8*	*New*	☐	☐
												☐	☐
												☐	☐

1. See Instructions in the Nonresidential Compliance Manual, page 3-96.
2. If Fail, then describe on Page 2 of the Inspection Checklist Form and take appropriate action to correct. A fail does not meet compliance.

FENESTRATION SURFACE DETAILS

Tag:ID[1]	Fenestration Type[2]	Area (ft^2)	Orientation N, E, S, W	Max U-Factor	U-Factor Source[3]	Max (R)SHGC	SHGC Source[3]	Overhang	Conditions Status[4]	Pass	Fail[5]
1	*Window*	*80*	*(N)*	*0.290*	*COG*	*0.380*	*COG*	☑	*New*	☐	☐
2	*Window*	*80*	*(N)*	*0.290*	*COG*	*0.380*	*COG*	☑	*New*	☐	☐
3	*Window*	*80*	*(N)*	*0.290*	*COG*	*0.380*	*COG*	☑	*New*	☐	☐
4	*Window*	*132*	*(E)*	*0.290*	*COG*	*0.380*	*COG*	☑	*New*	☐	☐
5	*Window*	*150*	*(W)*	*0.290*	*COG*	*0.380*	*COG*	☐	*New*	☐	☐
6	*Window*	*269*	*(N)*	*0.290*	*COG*	*0.380*	*COG*	☑	*New*	☐	☐
7	*Window*	*17*	*(E)*	*0.290*	*COG*	*0.380*	*COG*	☑	*New*	☐	☐
8	*Skylight*	*124*	*(N)*	*0.290*	*COG*	*0.380*	*COG*	☐	*New*	☐	☐
								☐		☐	☐
								☐		☐	☐

1. See Instructions in the Nonresidential Compliance Manual, page 3-96.
2. If Fail then describe on Page 2 of the Inspection Checklist Form and take appropriate action to correct. Verify building plans if necessary.

Bayley Construction
3730 S. Susan St.
Suite 200
Santa Ana, CA, 92704
CA. License 734880
Tel 714-540-8863
Fax 714-556-8863

Bayley Construction
8005 S.E. 28th St.
P.O. Box 9004
Mercer Island, WA, 98040
WA. License
BAYLEC034JC
Tel 206-621-8884
Fax 206-343-7728

DLR Group WWCOT
Architecture Engineering Planning Interiors

4280 Latham Street, Suite H
Riverside, California 92501
T 951.682.0470
F 951.682.1801

wwcot.com
dlrgroup.com

Santa Monica
Sacramento
Riverside
Palm Springs
Modesto
Shanghai, China

Copyright © 2010, DLR Group Inc. of California
DBA DLR Group WWCOT. All Rights Reserved

GLUMAC
engineers for a sustainable future™
18200 Von Karman Ave., Suite 100
Irvine, CA 92612
T. 949.833.8190 F. 949.833.0252
Job No.: 04.10.00861
Contact: JM
www.glumac.com

Public Agency Submittal:
Issued for Bidding:
Issued for Construction:

Revisions:

FOR CONSTRUCTION

REGISTERED PROFESSIONAL ENGINEER
RICHARD HOLZER
No. 22941
Exp. 9-30-12
MECHANICAL
STATE OF CALIFORNIA

Phase I
FOX
ENTERTAINMENT
PLAZA
3605 Market Street
Riverside, CA 92501

City of Riverside

3900 Main Street , Riverside, CA 92522

Phase: CD
Revised 02.10.11
DLR Group Project No.75-10603-00

Mechanical Title 24
Forms

Issued Date: 05.20.11
Drawn By: -
Checked By: -

A- M301

Sheet №

File Path & Name: G:\2010 - Jobs\04.10.00861\Fox Elevator Annex\Arch\2011-01-11\75-10603-00 Riv Parking Garages 7_Phase 1.rvt
© WWCOT 2009 -- Plotted 1/11/2011 2:24:38 PM

MECHANICAL MANDATORY MEASURES: NONRESIDENTIAL — MECH-MM

Project Name: *Phase I Fox Lobby Expansion* | Date: *2/9/2011*

Equipment and System Efficiencies

§111:	Any appliance for which there is a California standard established in the Appliance Efficiency Regulations will comply with the applicable standard.
§115(a):	Fan type central furnaces shall not have a pilot light.
§123:	Piping, except that conveying fluids at temperatures between 60 and 105 degrees Fahrenheit, or within HVAC equipment, shall be insulated in accordance with Standards Section 123.
§124:	Air handling duct systems shall be installed and insulated in compliance with Sections 601, 602, 603, 604, and 605 of the CMC Standards.

Controls

§122(e):	Each space conditioning system shall be installed with one of the following:
1A.	Each space conditioning system serving building types such as offices and manufacturing facilities (and all others not explicitly exempt from the requirements of Section 112 (d)) shall be installed with an automatic time switch with an accessible manual override that allows operation of the system during off-hours for up to 4 hours. The time switch shall be capable of programming different schedules for weekdays and weekends and have program backup capabilities that prevent the loss of the device's program and time setting for at least 10 hours if power is interrupted; or
1B.	An occupancy sensor to control the operating period of the system; or
1C.	A 4-hour timer that can be manually operated to control the operating period of the system.
2.	Each space conditioning system shall be installed with controls that temporarily restart and temporarily operate the system as required to maintain a setback heating and/or a setup cooling thermostat setpoint.
§122(g):	Each space conditioning system serving multiple zones with a combined conditioned floor area more than 25,000 square feet shall be provided with isolation zones. Each zone: shall not exceed 25,000 square feet; shall be provided with isolation devices, such as valves or dampers that allow the supply of heating or cooling to be setback or shut off independently of other isolation areas, and shall be controlled by a time control device as described above.
§122(c):	Thermostats shall have numeric setpoints in degrees Fahrenheit (F) and adjustable setpoint stops accessible only to authorized personnel.
§122(b):	Heat pumps shall be installed with controls to prevent electric resistance supplementary heater operation when the heating load can be met by the heat pump alone
§122(a&b):	Each space conditioning system shall be controlled by an individual thermostat that responds to temperature within the zone. Where used to control heating, the control shall be adjustable down to 55 degrees F or lower. For cooling, the control shall be adjustable up to 85 degrees F or higher. Where used for both heating and cooling, the control shall be capable of providing a deadband of at least 5 degrees F within which the supply of heating and cooling is shut off or reduced to a minimum.

Ventilation

§121(e):	Controls shall be provided to allow outside air dampers or devices to be operated at the ventilation rates as specified on these plans.
§122(f):	All gravity ventilating systems shall be provided with automatic or readily accessible manually operated dampers in all openings to the outside, except for combustion air openings.
§121(f):	Ventilation System Acceptance. Before an occupancy permit is granted for a newly constructed building or space, or a new ventilating system serving a building or space is operated for normal use, all ventilation systems serving the building or space shall be certified as meeting the Acceptance Requirements for Code Compliance

Service Water Heating Systems

§113(c)	Installation
3.	Temperature controls for public lavatories. The controls shall limit the outlet Temperature to 110° F.
2.	Circulating service water-heating systems shall have a control capable of automatically turning off the circulating pump when hot water is not required.

CERTIFICATE OF COMPLIANCE and FIELD INSPECTION ENERGY CHECKLIST (Part 2 of 4) — MECH-1C

Project Name: *Phase I Fox Lobby Expansion* | Date: *2/9/2011*

Discrepancies:

CERTIFICATE OF COMPLIANCE and FIELD INSPECTION ENERGY CHECKLIST (Part 1 of 4) — MECH-1C

Project Name: *Phase I Fox Lobby Expansion* | Date: *2/9/2011*

Project Address	Climate Zone	Total Cond. Floor Area	Addition Floor Area
3605 Market Street Riverside	*10*	*2,908*	*n/a*

GENERAL INFORMATION

Building Type:	☑ Nonresidential	☐ High-Rise Residential	☐ Hotel/Motel Guest Room	
☐ Schools (Public School)	☐ Relocatable Public School Bldg.	☑ Conditioned Spaces	☐ Unconditioned Spaces (affidavit)	
Phase of Construction:	☑ New Construction	☐ Addition	☐ Alteration	
Approach of Compliance:	☐ Component	☐ Overall Envelope TDV Energy	☐ Unconditioned (file affidavit)	
Front Orientation: N, E, S, W or in Degrees:	*0 deg*			

HVAC SYSTEM DETAILS

Equipment[2]	Inspection Criteria	FIELD INSPECTION ENERGY CHECKLIST Meets Criteria or Requirements: Pass	Fail – Describe Reason[3]
Item or System Tags (i.e. AC-1, RTU-1, HP-1)	*AC-1*	☐	☐
Equipment Type[1]:	*Packaged DX*	☐	☐
Number of Systems	*1*	☐	☐
Max Allowed Heating Capacity[1]	*180,000 Btu/hr*	☐	☐
Minimum Heating Efficiency[1]	*80% AFUE*	☐	☐
Max Allowed Cooling Capacity[1]	*170,800 Btu/hr*	☐	☐
Cooling Efficiency[1]	*12.2 EER*	☐	☐
Duct Location/ R-Value	*Attic, Ceiling Ins. vented / 8.0*	☐	☐
When duct testing is required, submit **MECH-4A & MECH-4-HERS**	*No*	☐	☐
Economizer	*Diff. Temp (integrated)*	☐	☐
Thermostat	*Setback Required*	☐	☐
Fan Control	*Constant Volume*	☐	☐

Equipment[2]	Inspection Criteria	FIELD INSPECTION ENERGY CHECKLIST Pass	Fail – Describe Reason[3]
Item or System Tags (i.e. AC-1, RTU-1, HP-1)		☐	☐
Equipment Type[1]:		☐	☐
Number of Systems		☐	☐
Max Allowed Heating Capacity[1]		☐	☐
Minimum Heating Efficiency[1]		☐	☐
Max Allowed Cooling Capacity[1]		☐	☐
Cooling Efficiency[1]		☐	☐
Duct Location/ R-Value		☐	☐
When duct testing is required, submit **MECH-4A & MECH-4-HERS**		☐	☐
Economizer		☐	☐
Thermostat		☐	☐
Fan Control		☐	☐

1. If the Actual installed equipment performance efficiency and capacity is less than the Proposed (from the energy compliance submittal) or from the building plans) the responsible party shall resubmit energy compliance to include the new changes.
2. For additional detailed discrepancy use Page 2 of the Inspection Checklist Form. Compliance fails if a Fail box is checked.
3. Indicate Equipment Type: Gas (Pkg or, Split), VAV, HP (Pkg or split), Hydronic, PTAC, or other.

CERTIFICATE OF COMPLIANCE and FIELD INSPECTION ENERGY CHECKLIST (Part 4 of 4) — MECH-1C

Project Name: *Phase I Fox Lobby Expansion* | Date: *2/9/2011*

TEST DESCRIPTION: Equipment Requiring Testing	Qty.	MECH-12A Fault Detection & Diagnostics for DX Units	MECH-13A Automatic Fault Detection & Diagnostics for Air & Zone	MECH-14A Distributed Energy Storage DX AC Systems	MECH-15A Thermal Energy Storage (TES) Systems	Test Performed By:
York ZJ150	*1*	☐	☐	☐	☐	
		☐	☐	☐	☐	
		☐	☐	☐	☐	
		☐	☐	☐	☐	
		☐	☐	☐	☐	
		☐	☐	☐	☐	
		☐	☐	☐	☐	
		☐	☐	☐	☐	
		☐	☐	☐	☐	
		☐	☐	☐	☐	
		☐	☐	☐	☐	
		☐	☐	☐	☐	
		☐	☐	☐	☐	
		☐	☐	☐	☐	
		☐	☐	☐	☐	
		☐	☐	☐	☐	
		☐	☐	☐	☐	
		☐	☐	☐	☐	
		☐	☐	☐	☐	
		☐	☐	☐	☐	
		☐	☐	☐	☐	
		☐	☐	☐	☐	
		☐	☐	☐	☐	
		☐	☐	☐	☐	
		☐	☐	☐	☐	
		☐	☐	☐	☐	
		☐	☐	☐	☐	
		☐	☐	☐	☐	

CERTIFICATE OF COMPLIANCE and FIELD INSPECTION ENERGY CHECKLIST (Part 3 of 4) — MECH-1C

Project Name: *Phase I Fox Lobby Expansion* | Date: *2/9/2011*

Required Acceptance Tests

Designer:

This form is to be used by the designer and attached to the plans. Listed below are all the acceptance tests for mechanical systems. The designer is required to check the applicable boxes by all acceptance tests that apply and listed all equipment that requires an acceptance test. If all equipment of a certain type requires a test, list the equipment description and the number of systems. The NA number designates the Section in the Appendix of the Nonresidential Reference Appendices Manual that describes the test. Since this form will be part of the plans, completion of this section will allow the responsible party to budget for the scope of work appropriately.

Building Departments:

Systems Acceptance: Before occupancy permit is granted for a newly constructed building or space, or a new space-conditioning system serving a building or space is operated for normal use, all control devices serving the building or space shall be certified as meeting the Acceptance Requirements for Code Compliance.
Systems Acceptance: Before occupancy permit is granted. All newly installed HVAC equipment must be tested using the Acceptance Requirements.

The MECH-1C form is not considered a completed form and is not to be accepted by the building department unless the correct boxes are checked. The equipment requiring testing, person performing the test (Example: HVAC installer, TAB contractor, controls contractor, PE in charge of project) and what Acceptance test must be conducted. The following checked-off forms are required for **ALL** newly installed equipment. In addition a Certificate of Acceptance forms shall be submitted to the building department that certifies plans, specifications, installation, certificates, and operating and maintenance information meet the requirements of §10-103(b) and Title-24 Part 6. The building inspector must receive the properly filled out and signed forms before the building can receive final occupancy.

TEST DESCRIPTION: Equipment Requiring Testing or Verification	Qty.	MECH-2A Outdoor Ventilation For VAV & CAV	MECH-3A Constant Volume & Single-Zone Unitary	MECH-4A Air Distribution Ducts	MECH-5A Economizer Controls	MECH-6A Demand Control Ventilation DCV	MECH-7A Supply Fan VAV	MECH-8A Valve Leakage Test	MECH-9A Supply Water Temp. Reset	MECH-10A Hydronic System Variable Flow Control	MECH-11A Automatic Demand Shed Control
York ZJ150	*1*	☑	☑	☐	☑	☐	☐	☐	☐	☐	☐
		☐	☐	☐	☐	☐	☐	☐	☐	☐	☐
		☐	☐	☐	☐	☐	☐	☐	☐	☐	☐
		☐	☐	☐	☐	☐	☐	☐	☐	☐	☐
		☐	☐	☐	☐	☐	☐	☐	☐	☐	☐
		☐	☐	☐	☐	☐	☐	☐	☐	☐	☐
		☐	☐	☐	☐	☐	☐	☐	☐	☐	☐
		☐	☐	☐	☐	☐	☐	☐	☐	☐	☐
		☐	☐	☐	☐	☐	☐	☐	☐	☐	☐
		☐	☐	☐	☐	☐	☐	☐	☐	☐	☐
		☐	☐	☐	☐	☐	☐	☐	☐	☐	☐
		☐	☐	☐	☐	☐	☐	☐	☐	☐	☐
		☐	☐	☐	☐	☐	☐	☐	☐	☐	☐
		☐	☐	☐	☐	☐	☐	☐	☐	☐	☐
		☐	☐	☐	☐	☐	☐	☐	☐	☐	☐
		☐	☐	☐	☐	☐	☐	☐	☐	☐	☐
		☐	☐	☐	☐	☐	☐	☐	☐	☐	☐
		☐	☐	☐	☐	☐	☐	☐	☐	☐	☐
		☐	☐	☐	☐	☐	☐	☐	☐	☐	☐
		☐	☐	☐	☐	☐	☐	☐	☐	☐	☐
		☐	☐	☐	☐	☐	☐	☐	☐	☐	☐
		☐	☐	☐	☐	☐	☐	☐	☐	☐	☐
		☐	☐	☐	☐	☐	☐	☐	☐	☐	☐
		☐	☐	☐	☐	☐	☐	☐	☐	☐	☐

Bayley Construction
3730 S. Susan St.
Suite 200
Santa Ana, CA 92704
CA. License 734880
Tel 714-540-8863
Fax 714-556-8863

Bayley Construction
8005 S.E. 28th St.
P.O. Box 9004
Mercer Island, WA. 98040
WA. License
BAYLEC034JC
Tel 206-621-8884
Fax 206-343-7728

DLR Group WWCOT
Architecture Engineering Planning Interiors

4280 Latham Street, Suite H
Riverside, California 92501
T 951.682.0470
F 951.682.1801

wwcot.com
dlrgroup.com

Santa Monica
Sacramento
Riverside
Palm Springs
Modesto
Shanghai, China

Copyright © 2010, DLR Group Inc. of California
DBA DLR Group WWCOT. All Rights Reserved

GLUMAC
engineers for a sustainable future™
18200 Von Karman Ave., Suite 100
Irvine, CA 92612
T. 949.833.8190 F. 949.833.0252
Job No.: 04.10.00861
Contact: JM
www.glumac.com

Public Agency Submittal:
Issued for Bidding:
Issued for Construction:

Revisions:

FOR CONSTRUCTION

REGISTERED PROFESSIONAL ENGINEER — RICHARD HOLZER — No. 22941 Exp. 9-30-12 — MECHANICAL — STATE OF CALIFORNIA

Phase I
FOX
ENTERTAINMENT
PLAZA
3605 Market Street
Riverside, CA 92501

City of Riverside

CITY OF RIVERSIDE

3900 Main Street , Riverside, CA 92522

Phase: CD
Revised 02.10.11
DLR Group Project No.75-10603-00

Mechanical Title 24 Forms

Issued Date: 05.20.11
Drawn By: -
Checked By: -

A- M302
Sheet №

File Path & Name: G:\2010 - Jobs\04.10.00861\Fox Elevator Annex\Arch\2011-01-11\75-10603-00 Riv Parking Garage 7_Phase I.rvt
© WWCOT 2009 -- Plotted 1/11/2011 2:24:38 PM

LOBBY ANNEX PLUMBING PLANS

GENERAL NOTES

1. THE PLUMBING SYSTEM DESIGN, INSTALLATION AND MATERIALS SHALL CONFORM TO THE 2010 EDITION OF THE CALIFORNIA PLUMBING CODE, APPLICABLE LOCAL CODES & ORDINANCES AND REQUIREMENTS OF AUTHORITIES HAVING JURISDICTION.
2. THE CONTRACTOR SHALL BE RESPONSIBLE FOR VERIFYING CURRENT REQUIREMENTS WITH THE MANUFACTURER OF THE PRODUCTS USED ON THE PROJECT AND NOTIFY THE ARCHTIECT/ENGINEER OF RECORD IF ANY DISCREPANCIES ARE FOUND BEFORE THE PURCHASE OF THE PRODUCT OR ANY WORK TO INSTALL OWNER-FURNISHED PRODUCTS.
3. VERIFY EXACT LOCATION & SIZE OF EXISTING WASTE, VENT, STORM DRAIN AND WATER PIPING PRIOR TO START OF WORK. ANY DEVIATIONS FROM THE DRAWINGS OR SPECIFICATIONS SHALL BE BROUGHT TO THE ATTENTION OF THE ARCHITECT/ENGINEER PRIOR TO START OF WORK.
4. SCHEDULE ALL WORK WITH THE FACILITY INCLUDING CONSTRUCTION ACCESS AND STORAGE. THE CONSTRUCTION SCHEDULE PROCEDURE SHALL BE APPROVED BY THE FACILITY PRIOR TO START OF CONSTRUCTION.
5. CONTRACTOR SHALL PROVIDE DUST COVERS AS REQUIRED TO CONTAIN DUST AND DEBRIS WITHIN THE CONSTRUCTION AREA. BROOM CLEAN ALL AREAS EACH DAY. KEEP DIRT AND DUST TO A MINIMUM.
6. ALL REMOVED ITEMS DEEMED TO HAVE VALUE BY THE OWNER SHALL BE DELIVERED TO A PLACE OF STORAGE AT THE SITE AS DIRECTED. ALL OTHER ITEMS MUST BE DISPOSED OF OFF-SITE IN A LEGAL MANNER.
7. CONTRACTOR SHALL OBTAIN AND PAY FOR THE REQUIRED FEES, PERMITS AND INSPECTIONS.
8. ALL PIPING SHOWN ON DRAWINGS IS DIAGRAMMATIC AND SHALL NOT BE SCALED TO DETERMINE EXACT LOCATION.
9. ALL PIPING SHOWN ON DRAWINGS SHALL BE CONSIDERED NEW UNLESS OTHERWISE NOTED.
10. PROVIDE APPROVED FIRE STOPS AT ALL LOCATIONS WHERE PIPING PENETRATES FIRE RATED PARTITIONS OR SLAB.
11. PROVIDE WATER PROOF SEALANT AT FLOOR DRAIN AND PIPE FLOOR PENETRATIONS.
12. THESE DRAWINGS DO NOT INCLUDE ALL NECESSARY SAFETY REQUIREMENTS. CONTRACTOR TO COMPLY WITH SAFETY REQUIREMENTS SET FORTH BY THE LOCAL AUTHORITIES HAVING JURISDICTION.
13. TEST SYSTEM(S) IN ACCORDANCE WITH REQUIREMENTS OF THE GOVERNING AUTHORITIES.
14. ALL PLUMBING WORK SHALL BE INSTALLED SO AS TO AVOID INTERFERENCE WITH ELECTRICAL AND MECHANICAL EQUIPMENT AND STRUCTURAL FRAMING.
15. ALL CLEANOUTS SHALL BE INSTALLED WHERE READILY ACCESSIBLE AND LOCATED AS PER CODE REQUIREMENTS. THE CONTRACTOR SHALL COORDINATE ALL CLEANOUT LOCATIONS WITH EQUIPMENT, CABINETS, ETC., AND THE ARCHITECT PRIOR TO ANY INSTALLATION.
16. ALL VALVES, UNIONS, ETC. TO BE SAME SIZE AS LINE SIZE UNLESS OTHERWISE INDICATED ON DRAWINGS.
17. BEFORE FABRICATION OR INSTALLATION, THE CONTRACTOR SHALL VERIFY EXACT LOCATIONS OF ALL MECHANICAL EQUIPMENT AND EQUIPMENT PROVIDED UNDER ANOTHER SECTION OF SPECIFICATIONS. EXACT ROUGH-IN LOCATIONS AND REQUIREMENTS SHALL BE COORDINATED IN FIELD.
18. IF SOILS REPORT INDICATES THAT LOCAL SOIL IS CORROSIVE, ALL UNDERGROUND PIPE AND FITTINGS SHALL BE PROTECTED IN ACCORDANCE WITH THE RECOMMENDATIONS OF THE SOILS REPORT ENGINEER.
19. ALL PLUMBING PENETRATIONS THRU THE SLAB OR STRUCTURAL MEMBERS SHALL BE CAREFULLY COORDINATED WITH THE STRUCTURAL ENGINEER PRIOR TO CONSTRUCTION.
20. ALL HORIZONTAL PIPING LINES EXTENDED AND CONNECTED TO EQUIPMENT SHALL BE RUN AT THE HIGHEST POSSIBLE ELEVATIONS.
21. THESE DRAWINGS SHALL BE READ IN CONJUNCTION WITH AND BE CONSIDERED TO BE A PART OF SEPARATE AND COMPLETE MECHANICAL SPECIFICATION.
22. THE CONTRACTOR SHALL BE RESPONSIBLE FOR PATCHING AND REPAIRING ALL AREAS WHICH ARE EXCAVATED AND/OR DAMAGED BY THEIR OPERATIONS. IN ADDITION, THE CONTRACTOR SHALL RESTORE TO THEIR ORIGINAL CONDITION ALL AREAS DAMAGED BY HIS OPERATIONS.
23. ALL CUTTING OF EXISTING PAVING, WALKS AND/OR FLOORS SHALL BE BY MACHINE SAW CUTTING. HOLES FOR PIPES IN CONCRETE WALLS OR FLOORS SHALL BE DONE USING CORE DRILLING EQUIPMENT.
24. ALL PIPING SHALL BE SUPPORTED SO AS NOT TO CONTACT ANY PORTION OF THE SUSPENDED CEILING SYSTEMS OR STUDS/GYPSUM BOARD/NOISE CONTROL ELEMENTS OF THE OVERALL STRUCTURE. TRAPEZES OR OTHER DEVICES SHALL BE USED WHERE PIPING INTERFACES WITH THE NORMAL SPACING OF HANGER WIRES FOR CEILING SYSTEMS.
25. ALL SANITARY & STORM DRAIN PIPING SHALL BE SLOPED AT 1/4 INCH PER FOOT UNLESS OTHERWISE INDICATED.
26. DISINFECTION & FLUSHING OF POTABLE WATER PIPING SHALL BE DONE IN ACCORDANCE WITH CPC SEC. 609.9

PLUMBING LEGEND

SYMBOL	DESCRIPTION
	BALL VALVE
	UNION
	CAP OR PLUG
CO	CLEANOUT PLUG
FCO	FLOOR CLEANOUT
YCO	YARD CLEANOUT
WH	WALL HYDRANT
HB	HOSE BIBB
FD	FLOOR DRAIN
FS	FLOOR SINK
	HUB DRAIN
	DIRECTION OF SLOPE
	DIRECTION OF FLOW
	PIPE UP
	PIPE DOWN
	PIPE DROP
	TOP CONNECTION – BRANCH LINE
	BOTTOM CONNECTION – BRANCH LINE
	COLD WATER
	HOT WATER (120°F)
SAN	SANITARY SEWER
	PIPING BELOW GRADE
	WASTE
	VENT
PD	PUMPED DRAIN (WASTE)
OCD	OVERFLOW CONDENSATE DRAIN
PCD	PUMPED CONDENSATE DRAIN

ABBREVIATIONS

A	AIR	IN	INCH OR INCHES
ABV	ABOVE	INV	INVERT
A/C	AIR CONDITIONING	KW	KILOWATT
AFF	ABOVE FINISHED FLOOR	MAX	MAXIMUM
AP	ACCESS PANEL	MBH	THOUSAND BTU PER HOUR
ARCH	ARCHITECTURAL	MC	MECHANICAL CONTRACTOR
BEL	BELOW	MECH	MECHANICAL
BEY	BEYOND	MFR	MANUFACTURER
BLDG	BUILDING	MTD	MOUNTED
BOP	BOTTOM OF PIPE	(N)	NEW
BTM	BOTTOM	N/A	NOT APPLICABLE
BV	BALL VALVE	NIC	NOT IN CONTRACT
CD	CONDENSATE DRAIN	OD	OVERFLOW DRAIN
CFH	CUBIC FEET PER HOUR	O_2	OXYGEN
CLG	CEILING	PC	PLUMBING CONTRACTOR
CONN	CONNECTION OR CONNECT	PLBG	PLUMBING
CP	CHROME PLATED	POC	POINT OF CONNECTION
CW	COLD WATER	PCD	PRIMARY CONDENSATE DRAIN
ø	DIAMETER	PSI	POUNDS PER SQUARE INCH
D/W	DISHWASHER	REQ'D	REQUIRED
DIA	DIAMETER	SCD	SECONDARY COND. DRAIN
DN	DOWN	SD	STORM DRAIN
DWG	DRAWING	SHT	SHEET
(E), EXIST	EXISTING	SOV	SHUT-OFF VALVE
FLR	FLOOR	SS	SANITARY SEWER
GC	GENERAL CONTRACTOR	(TYP.)	TYPICAL
GPM	GALLONS PER MINUTE	V	VENT
GV	GAS VENT	VAC	VACUUM
HDR	HEADER	VTR	VENT THRU ROOF
HW	HOT WATER	W	WASTE = SANITARY SEWER
HWR	HOT WATER RETURN	WCO	WALL CLEANOUT
		W/	WITH
		WHA	WATER HAMMER ARRESTER

PLUMBING FIXTURES SCHEDULE

ITEM	DESCRIPTION	TRAP	WASTE	VENT	CW	HW	REMARKS
RD-1	ROOF DRAIN	–	SEE PLANS	–	–	–	ZURN MODEL No. ZC100-C-R-VP ROOF DRAIN. DURA-COATED CAST IRON BODY W/ CAST IRON DOME. COMPLETE W/ UNDERDECK CLAMP &ROOF SUMP RECEIVER.
OD-1	OVERFLOW DRAIN	–	SEE PLANS	–	–	–	ZURN MODEL No. ZC100-C-R-VP-W2 OVERFLOW DRAIN. DURA-COATED CAST IRON BODY W/ CAST IRON DOME. COMPLETE W/ UNDERDECK CLAMP, ROOF SUMP RECEIVER & 2" INTERNAL WATER DAM.
AD-1	AREA DRAIN	–	SEE PLANS	–	–	–	ZURN MODEL No. ZN158-DT-C-Y 10" SQUARE TOP DECK DRAIN. DURA-COATED CAST IRON BODY W/ NICKEL BRONZE FRAME & GRATE. COMPLETE W/ UNDERDECK CLAMP, SEDIMENT BUCKET & HEEL PROOF DECORATIVE GRATE.
RR-1	ROOF RECEPTOR	2"	2"	1½"	–	–	ZURN MODEL No. Z127-C-R ROOF RECEPTOR DRAIN. DURA-COATED CAST IRON BODY W/ CAST IRON DOME. COMPLETE W/ UNDERDECK CLAMP & ROOF SUMP RECEIVER
DS-1	DOWNSPOUT NOZZLE	–	SEE PLANS	–	–	–	ZURN MODEL No. ZAB199-SS DOWNSPOUT NOZZLE. ALL POLISHED BRONZE BODY W/ REMOVABLE STAINLESS SCREEN.
HB-1	HOSE BIBB	–	–	–	¾"	–	ZURN MODEL No. Z1343-RC ROUGH CHROME HOSE BIBB COMPLETE W/ LOOSE KEY OPERATION AND VACUUM BREAKER MOUNTED AT 12" ABOVE FINISHED ROOF.
GPR-1	GAS PRESSURE REGULATOR	–	–	–	–	–	ELSTER AMERICAN METER – 1/2" GAS PRESSURE REGULATOR MODEL 1200B2 SERIES REGULATOR. ORIFICE TO SUIT FLOW CAPACITY & PRESSURE OF HVAC UNIT.

CONDENSATE DRAIN PUMP SCHEDULE

UNIT NO.	MANUFACTURER	MODEL	LOCATION	HORSE POWER	AMPERAGE	ELECTRICAL V. / PH. / HZ.	REMARKS
CDP-1	HARTELL	A2-X-1965	SEE PLANS	1/10HP	3.5 AMPS	115V-1ø-60HZ	PROVIDE EXTERNAL CHECK VALVE ON DISCHARGE LINE (PROVIDE & INSTALL FULL SIZE DRAIN PIPING FROM AIR HANDLER UNIT TO PUMP PER MANUFACTURERS RECOMMENDATION)

EQUIPMENT SCHEDULE

ITEM	SERVICE	DESCRIPTION
FG-1	DOWNSPOUT FILTER	FLOGARD DOWNSPOUT FILTER MODEL FG-DS6 CONSTRUCTED FROM 304 STAINLESS STEEL. FILTER MEDIUM SHALL BE FOSSIL ROCK INSTALED AND MAINTAINED IN ACCORDANCE WITH MANUFACTURER RECOMMENDATIONS.

PLUMBING DRAWING LIST

A-P000	PLUMBING LEAD SHEET
A-P100	PLUMBING SITE PLAN
A-P101	MAIN/ORCHESTRA & BALCONY LEVEL FLOOR PLAN – PLUMBING
A-P102	CROSS-AISLE LEVEL & ROOF PLAN – PLUMBING
A-P111	EXISTING FOX THEATER ROOF PLAN

PIPING MATERIALS

1. SAN WASTE AND VENT & SD/OD PIPING ABOVE GRADE:	SERVICE WEIGHT NO-HUB CAST IRON PIPE WITH STAINLESS STEEL COUPLINGS.
2. SAN WASTE AND VENT & SD/OD PIPING BELOW GRADE:	SERVICE WEIGHT CAST IRON WITH 4 OR 6 BAND STAINLESS STEEL COUPLINGS. PROVIDE PIPE WRAP.
3. WATER PIPING ABOVE GROUND:	TYPE 'L' COPPER WITH WROUGHT COPPER FITTINGS WITH LEAD FREE SOLDER JOINTS & WATER SOLUBLE FLUX.
4. WATER PIPING BELOW GROUND:	TYPE 'K' COPPER WITH WROUGHT COPPER FITTINGS WITH LEAD FREE SOLDER JOINTS & WATER SOLUBLE FLUX.
5. CONDENSATE DRAIN:	TYPE 'M' COPPER WITH DRAINAGE TYPE FITTINGS WITH LEAD FREE SOLDER JOINTS & WATER SOLUBLE FLUX. INSULATE CONDENSATE DRAIN PIPES WITH MINIMUM ½" INSULATION TO PREVENT MOISTURE DRIPPING FROM PIPE.
6. GAS PIPING ABOVE GRADE:	SCHEDULE 40 BLACK STEEL PIPE WITH BLACK MALLEABLE SCREW FITTINGS.

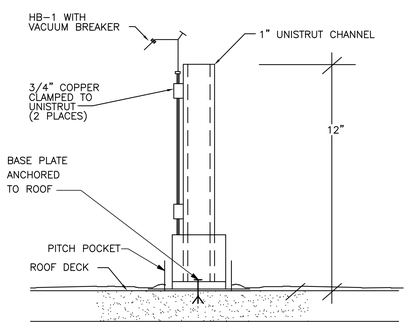

6 HOSE BIBB ON ROOF
SCALE: NONE

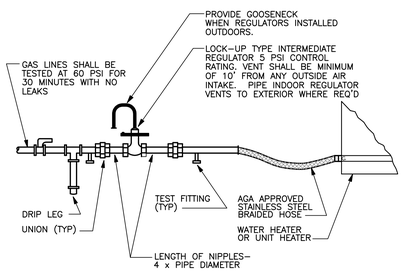

NOTE:

1. ALL PIPING SHALL BE PAINTED "YELLOW". DO NOT PAINT BRAIDED HOSE.
2. SEAL ROOF PENETRATIONS WITH MEMBRANE COLLAR & CLAMP.

5 GAS CONNECTION WITH REGULATOR
SCALE: NONE

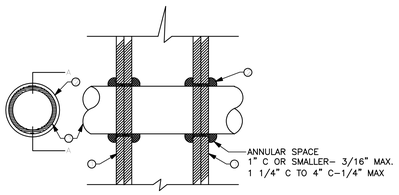

SECTION A-A

NOTES:

1. GYP BOARD, 5/8" THICK: 1HR. – 1 LAYER, 2HR. – 2 ALYERS.
2. FILL, VOID OR CAVITY MATERIAL – CAULK: CAULK FILL MATERIAL FORCED INTO ANNULAR SPACE TO MAX. EXTENT POSSIBLE AND WITH A MIN. 1/4" DIAMETER BEAD OF CAULK APPLIED TO PERIMETER OF PIPE OR CONDUIT AT ITS EGRESS FROM THE WALL. MINNESOTA MINING & MANUFACTURING CO.: TYPES SP -25 S/L, CP -25 N/S.
3. CONDUIT: NOM. 4" DIAMETER (OR SMALLER) STEEL EMT CONDUIT OR NOM. 1" DIAMETER (OR SMALLER) FLEXIBLE STEEL CONDUIT. A MAX. OF ONE PIPE OR CONDUIT IS PERMITTED IN THE FIRESTOP SYSTEM. PIPE OR CONDUIT TO BE INSTALLED NEAR CENTER OF STUD CAVITY WIDTH AND TO BE RIGIDLY SUPPORTED ON BOTH SIDES OF WALL ASSEMBLY.
4. FIRESTOP SYSTEM: INSTALLED SYMMETRICALLY ON BOTH SIDES OF WALL ASSEMBLY. THE HOURLY F RATING OF THE FIRESTOP SYSTEM IS EITHER 1 OR 2 HR. DEPENDING UPON THE HOURLY FIRE RATING OF THE WALL ASSEMBLY IN WHICH IT IS INSTALLED. THE HOURLY T RATING FOR THE FIRESTOP SYSTEM ARE DEPENDENT UPON THE SIZE OF THE CONDUIT, THE FIRESTOP CONFIGURATION AND THE HOURLY FIRE RATING OF THE WALL ASSEMBLY IN WHICH IT IS INSTALLED. THE FIRESTOP CONFIGURATION IS DEPENDENT UPON THE SIZE OF THE ANNULAR SPACE BETWEEN THE STEEL PIPE OR CONDUIT (OR PIPE COVERING) AND THE PERIMETER OF THE CIRCULAR THROUGH OPENING IN THE GYPSUM WALLBOARD LAYERS.

XHEZ SYSTEM NO. WL1001
F RATINGS – 1 AND 2 HR. (SEE NOTE 4)

4 PIPE THRU RATED WALL DETAIL
SCALE: NONE

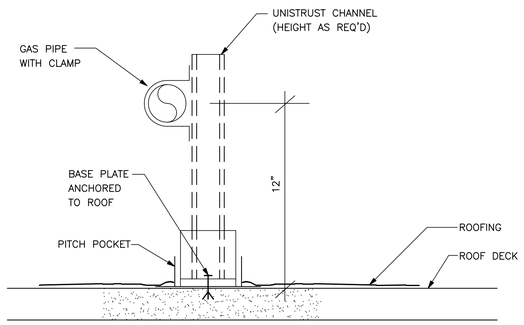

1 ROOF PIPING SUPPORT DETAIL
SCALE: N.T.S.

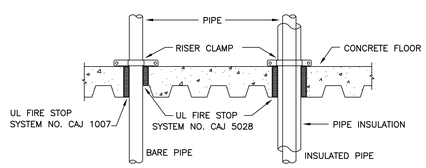

NOTES

1. INSTALLATION SHALL BE A U.L. LISTED SYSTEM W/ THE UNIFORM BUILDING CODE.
2. PENETRATIONS THRU FIRE RATED FLOOR ASSEMBLIES SHALL BE SIMILAR TO ABOVE.
3. WHERE APPROVED A PRE-MANUFACTURED FIRESTOPPING SYSTEM AS MFR'D BY "PROSET" OR EQUAL MAY BE PROVIDED IN LIEU OF THE DETAILS ABOVE. (UL # 1479)

3 FLOOR PENETRATION DETAIL
SCALE: N.T.S.

MOUNTING ON CONCRETE OR BLOCK WALL

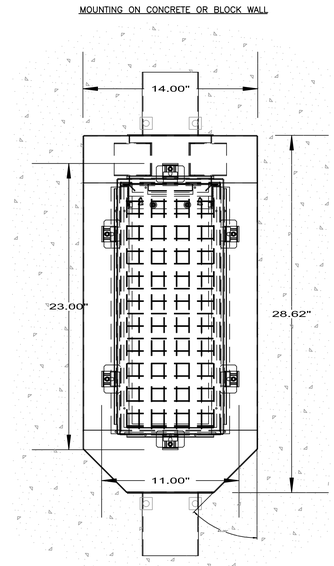

2 TYPICAL FLOGARD DOWNSPOUT FILTER
SCALE: N.T.S.

Bayley Construction
3730 S. Susan St.
Suite 200
Santa Ana, CA, 92704
CA. License 734880
Tel 714-540-8863
Fax 714-556-8863

Bayley Construction
8005 S.E. 28th St.
P.O. Box 9004
Mercer Island, WA, 98040
WA. License
BAYLEC034JC
Tel 206-621-8884
Fax 206-343-7728

BAYLEY CONSTRUCTION

DLR Group WWCOT
Architecture Engineering Planning Interiors

4280 Latham Street, Suite H
Riverside, California 92501
T 951.682.0470
F 951.682.1801

wwcot.com
dlrgroup.com

Santa Monica
Sacramento
Riverside
Palm Springs
Modesto
Shanghai, China

Copyright © 2010, DLR Group Inc. of California
DBA DLR Group WWCOT. All Rights Reserved

GLUMAC
engineers for a sustainable future™

18200 Von Karman Ave., Suite 100
Irvine, CA 92612
T. 949.833.8190 F. 949.833.0252

Job No.: 04.10.00861
Contact: JM
www.glumac.com

Public Agency Submittal:
Issued for Bidding:
Issued for Construction:

Revisions:

REGISTERED PROFESSIONAL ENGINEER
RICHARD HOLZER
No. 22941
Exp. 9-30-12
MECHANICAL
STATE OF CALIFORNIA

FOR CONSTRUCTION

Phase I
FOX ENTERTAINMENT PLAZA
3605 Market Street
Riverside, CA 92501

City of Riverside

CITY OF RIVERSIDE

3900 Main Street , Riverside, CA 92522

Phase: CD
Revised 02.10.11
DLR Group Project No.75-10603-00

Plumbing Lead Sheet

Issued Date: 05.20.11
Drawn By: -
Checked By: -

A- P000

Sheet №

File Path & Name: G:\2010 - Jobs\04.10.00861\Fox Elevator Annex\Arch\2011-01-11\75-10603-00 Riv Parking Garage 7_Phase 1.rvt
© WWCOT 2009 – Plotted 1/11/2011 2:24:38 PM

PROJECT NORTH

0' 10' 20' 40' 80'

Scale 1" = 20'-0"

PLUMBING SITE PLAN

1

Bayley Construction
3730 S. Susan St.
Suite 200
Santa Ana, CA. 92704
CA. License 734880
Tel 714-540-8863
Fax 714-556-8863

Bayley Construction
8005 S.E. 28th St.
P.O. Box 9004
Mercer Island, WA. 98040
WA. License
BAYLEC034JC
Tel 206-621-8884
Fax 206-343-7728

BAYLEY CONSTRUCTION

DLR Group WWCOT
Architecture Engineering Planning Interiors

4280 Latham Street, Suite H
Riverside, California 92501
T 951.682.0470
F 951.682.1801

wwcot.com
dlrgroup.com

Santa Monica
Sacramento
Riverside
Palm Springs
Modesto
Shanghai, China

Copyright © 2010, DLR Group Inc. of California
DBA DLR Group WWCOT. All Rights Reserved

GLUMAC
engineers for a sustainable future

18200 Von Karman Ave., Suite 100
Irvine, CA 92612
T. 949.833.8190 F. 949.833.0252

Job No.: 04.10.00861
Contact: JM
www.glumac.com

Public Agency Submittal:
Issued for Bidding:
Issued for Construction:

Revisions:

FOR CONSTRUCTION

REGISTERED PROFESSIONAL ENGINEER
GHAZWAN MATSUMOTO
No. E10328
Exp. 9-30-12
ELECTRICAL
STATE OF CALIFORNIA

Phase I
FOX
ENTERTAINMENT
PLAZA
3605 Market Street
Riverside, CA 92501

City of Riverside

CITY OF RIVERSIDE

3900 Main Street , Riverside, CA 92522

Phase: CD
Revised 02.10.11
DLR Group Project No.75-10603-00

Plumbing Site Plan

Issued Date: 05.20.11
Drawn By: -
Checked By: -

A- P100
Sheet №

File Path & Name: G:\2010 - Jobs\04.10.00861\Fox Elevator Annex\Arch\2011-01-11\75-10603-00 Riv Parking Garage 7_Phase 1.rvt
© WWCOT 2009 -- Plotted 1/11/2011 2:24:38 PM

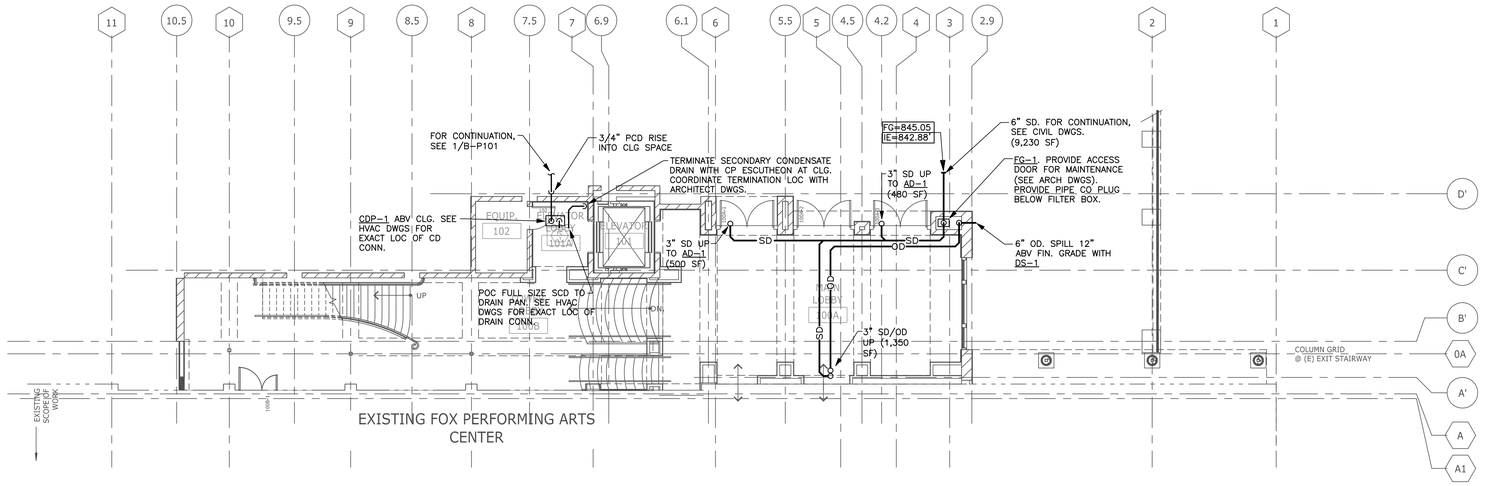

MAIN / ORCHESTRA LEVEL FLOOR PLAN - PLUMBING

Scale 1/8"= 1'-0" (1)

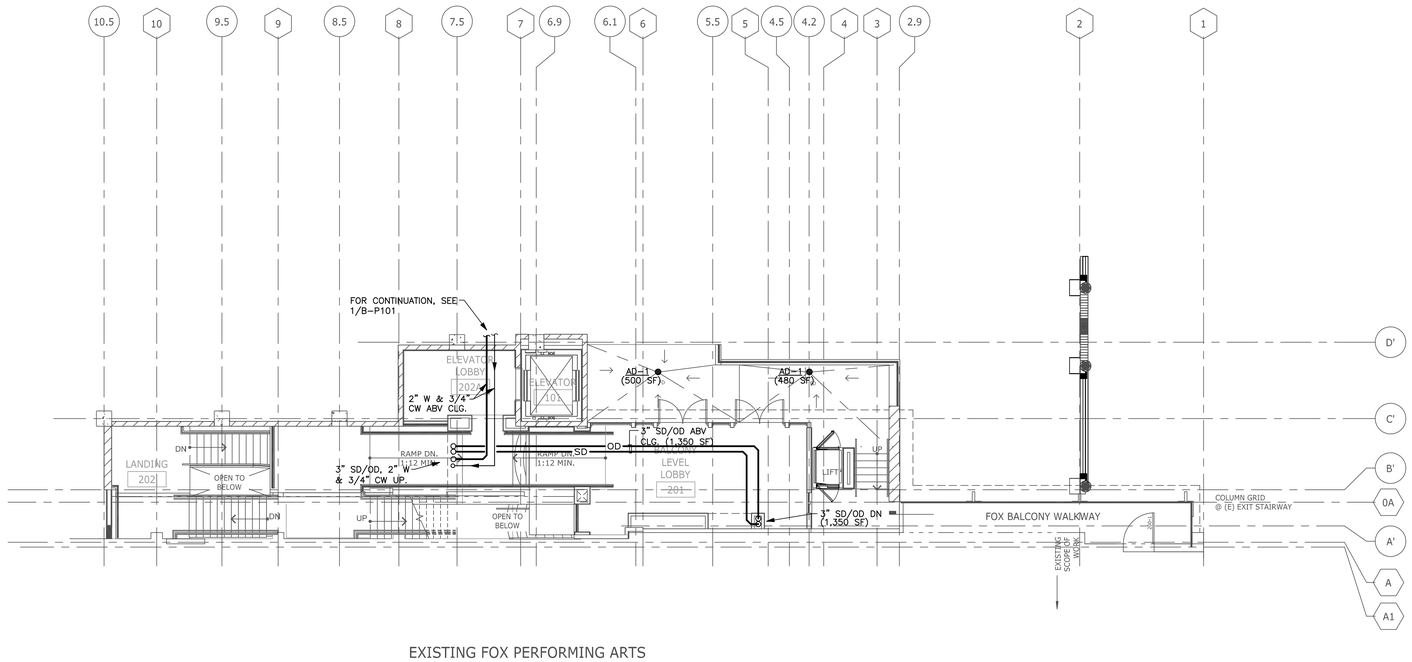

BALCONY LEVEL FLOOR PLAN - PLUMBING

Scale 1/8"= 1'-0" (2)

Bayley Construction
3730 S. Susan St.
Suite 200
Santa Ana, CA. 92704
CA. License 734880
Tel 714-540-8863
Fax 714-556-8863

Bayley Construction
8005 S.E. 28th St.
P.O. Box 9004
Mercer Island, WA. 98040
WA. License
BAYLEC034JC
Tel 206-621-8884
Fax 206-343-7728

DLR Group WWCOT
Architecture Engineering Planning Interiors

4280 Latham Street, Suite H
Riverside, California 92501
T 951.682.0470
F 951.682.1801

wwcot.com
dlrgroup.com

Santa Monica
Sacramento
Riverside
Palm Springs
Modesto
Shanghai, China

Copyright © 2010, DLR Group Inc. of California
DBA DLR Group WWCOT. All Rights Reserved

GLUMAC
engineers for a sustainable future

18200 Von Karman Ave., Suite 100
Irvine, CA 92612
T. 949.833.8190 F. 949.833.0252

Job No.: 04.10.00861
Contact: JM
www.glumac.com

Public Agency Submittal:
Issued for Bidding:
Issued for Construction:

Revisions:

FOR CONSTRUCTION

Phase I
FOX
ENTERTAINMENT
PLAZA
3605 Market Street
Riverside, CA 92501

City of Riverside

3900 Main Street , Riverside, CA 92522

Phase: CD
Revised 02.10.11
DLR Group Project No.75-10603-00

Main/Orchestra &
Balcony Level Floor Plan
Plumbing

Issued Date: 05.20.11
Drawn By: -
Checked By: -

A- P101
Sheet №

File Path & Name: G:\2010 - Jobs\04.10.00861\Fox Elevator Annex\Arch\2011-01-11\75-10603-00 Riv Parking Garage 7_Phase I.rvt
© WWCOT 2009 -- Plotted 1/11/2011 2:24:38 PM

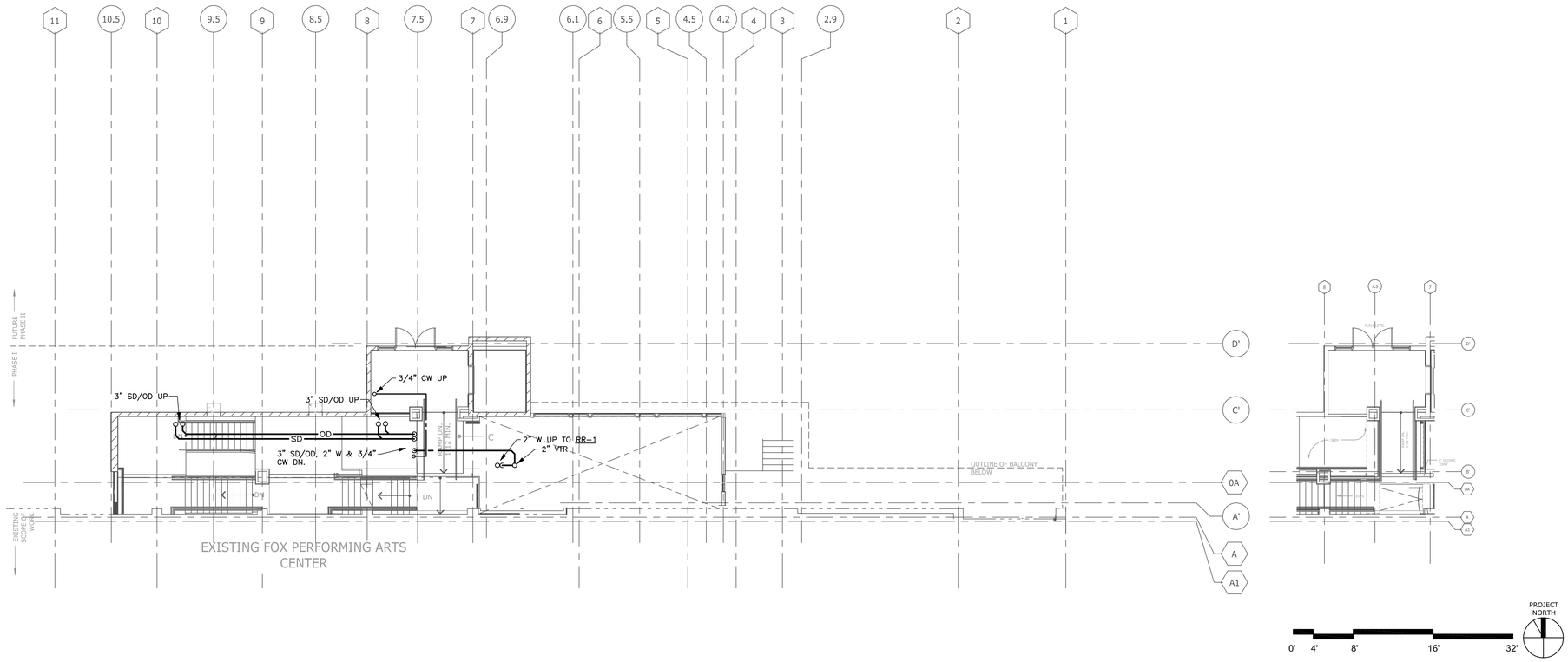

CROSS-AISLE LEVEL FLOOR PLAN - PLUMBING

Scale 1/8"= 1'-0" 1

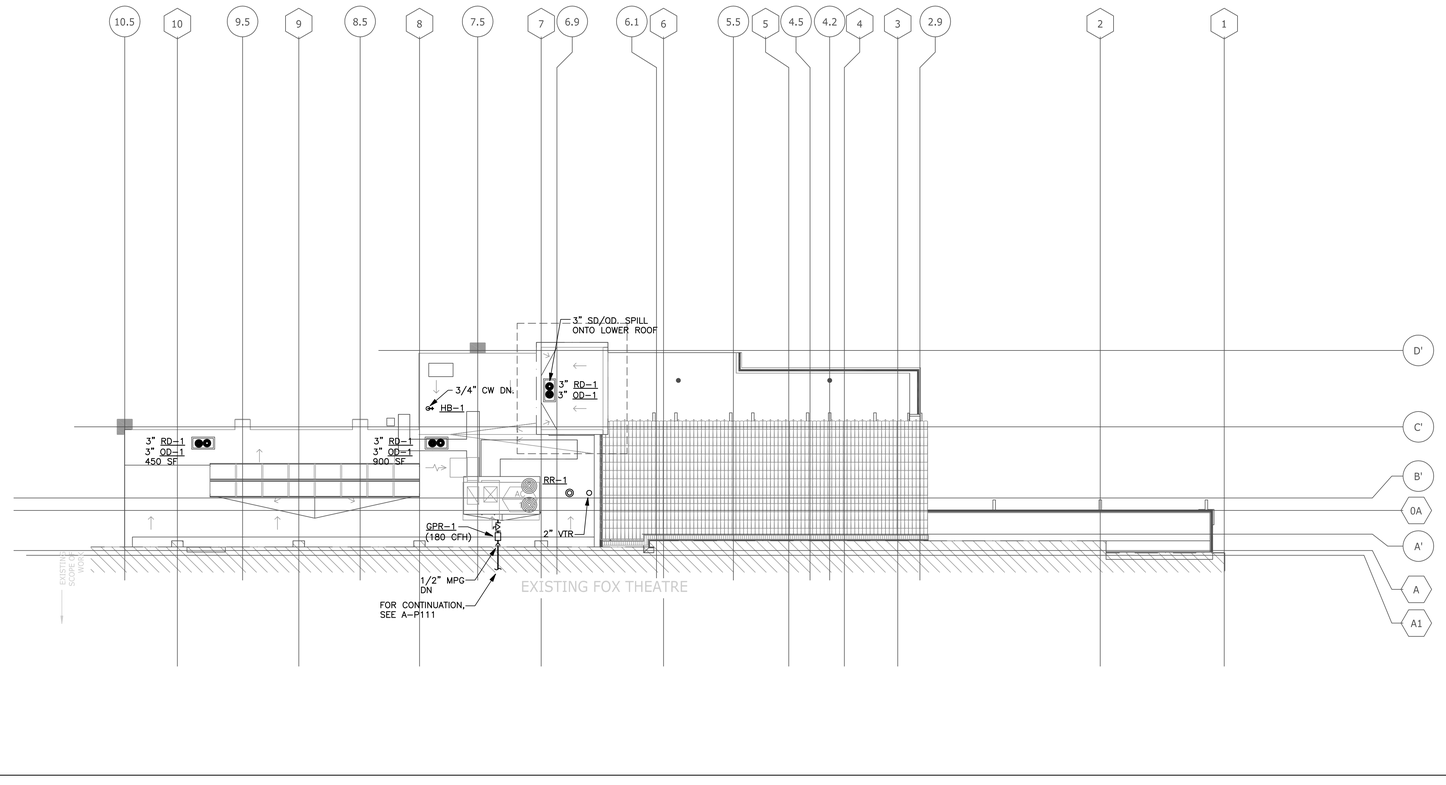

ROOF PLAN - PLUMBING

Scale 1/8"= 1'-0" 2

Bayley Construction
3730 S. Susan St.
Suite 200
Santa Ana, CA. 92704
CA. License 734880
Tel 714-540-8863
Fax 714-556-8863

Bayley Construction
8005 S.E. 28th St.
P.O. Box 9004
Mercer Island, WA. 98040
WA. License
BAYLEC034JC
Tel 206-621-8884
Fax 206-343-7728

DLR Group WWCOT
Architecture Engineering Planning Interiors

4280 Latham Street, Suite H
Riverside, California 92501
T 951.682.0470
F 951.682.1801

wwcot.com
dlrgroup.com

Santa Monica
Sacramento
Riverside
Palm Springs
Modesto
Shanghai, China

Copyright © 2010, DLR Group Inc. of California
DBA DLR Group WWCOT. All Rights Reserved

GLUMAC
engineers for a sustainable future™

18200 Von Karman Ave., Suite 100
Irvine, CA 92612
T. 949.833.8190 F. 949.833.0252

Job No.: 04.10.00861
Contact: JM
www.glumac.com

Public Agency Submittal:
Issued for Bidding:
Issued for Construction:

Revisions:

FOR CONSTRUCTION

REGISTERED PROFESSIONAL ENGINEER
RICHARD HOLZER, P.E.
No. 22941
Exp. 9-30-12
MECHANICAL
STATE OF CALIFORNIA

Phase I
FOX
ENTERTAINMENT
PLAZA
3605 Market Street
Riverside, CA 92501

City of Riverside

CITY OF RIVERSIDE

3900 Main Street , Riverside, CA 92522

Phase: CD
Revised 02.10.11
DLR Group Project No.75-10603-00

Cross-Aisle Level & Roof Plan - Plumbing

Issued Date: 05.20.11
Drawn By: -
Checked By: -

A- P102
Sheet №

File Path & Name: G:\2010 - Jobs\04.10.00861\Fox Elevator Annex\Arch\2011-01-11\75-10603-00 Riv Parking Garage 7_Phase I.rvt
© WWCOT 2009 -- Plotted 1/11/2011 2:24:38 PM

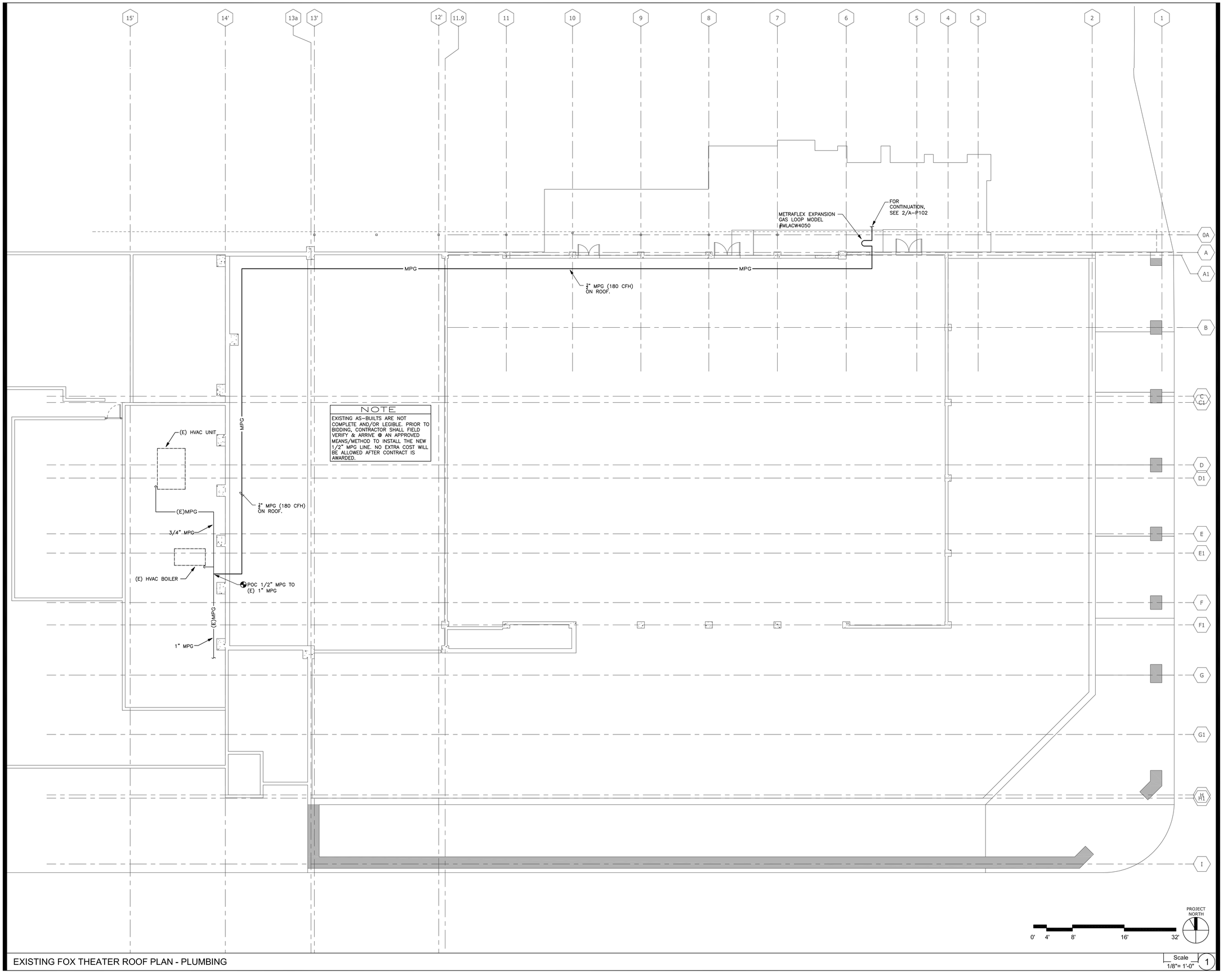

EXISTING FOX THEATER ROOF PLAN - PLUMBING

Scale 1/8"= 1'-0"

1

Bayley Construction
3730 S. Susan St.
Suite 200
Santa Ana, CA. 92704
CA. License 734880
Tel 714-540-8863
Fax 714-556-8863

Bayley Construction
8005 S.E. 28th St.
P.O. Box 9004
Mercer Island, WA. 98040
WA. License
BAYLEC034JC
Tel 206-621-8884
Fax 206-343-7728

BAYLEY CONSTRUCTION

DLR Group WWCOT
Architecture Engineering Planning Interiors

4280 Latham Street, Suite H
Riverside, California 92501
T 951.682.0470
F 951.682.1801

wwcot.com
dlrgroup.com

Santa Monica
Sacramento
Riverside
Palm Springs
Modesto
Shanghai, China

Copyright © 2010, DLR Group Inc. of California
DBA DLR Group WWCOT. All Rights Reserved

GLUMAC
engineers for a sustainable future

18200 Von Karman Ave., Suite 100
Irvine, CA 92612
T. 949.833.8190 F. 949.833.0252

Job No.: 04.10.00861
Contact: JM
www.glumac.com

Public Agency Submittal:
Issued for Bidding:
Issued for Construction:

Revisions:

FOR CONSTRUCTION

REGISTERED PROFESSIONAL ENGINEER
RICHARD HOLZER
No. 22941
Exp. 9-30-12
MECHANICAL
STATE OF CALIFORNIA

Phase I
FOX
ENTERTAINMENT
PLAZA
3605 Market Street
Riverside, CA 92501

City of Riverside

CITY OF RIVERSIDE

3900 Main Street , Riverside, CA 92522

Phase: CD
Revised 02.10.11
DLR Group Project No.75-10603-00

Existing Fox Theater
Roof Plan Plumbing

Issued Date: 05.20.11
Drawn By: -
Checked By: -

A- P111

Sheet №

File Path & Name: G:\2010 - Jobs\04.10.0086\Fox Elevator Annex\Arch\2011-01-11\75-10603-00 Riv Parking Garage 7_Phase 1.rvt
© WWCOT 2009 -- Plotted 1/11/2011 2:24:38 PM

LOBBY ANNEX STRUCTURAL PLANS

Structural Steel

1. *Fabrication and Erection:* All structural steel shall be supplied by a City of Riverside approved fabricator shop and shall comply with AISC 360 and AISC 341, Part I.

2. *Structural Steel:* ASTM standard specifications indicated herein, unless noted otherwise:

   WF and WT Sections .... ASTM A992, Grade 50
   Angles and Channels .... ASTM A36
   Plates .... ASTM A36
   Structural Steel Noted Thus (50) .... ASTM A572 or A992, Grade 50
   Pipes .... ASTM A53, Grade B (35 ksi)
   Rectangular Hollow Structural Sections (HSS) .... ASTM A500, Grade B (46 ksi)
   Anchor Bolts or Unfinished Machine Bolts .... ASTM A307
   Threaded Round Stock .... ASTM A36
   Reinforcing Steel .... see Reinforcing Steel section of general notes

   Furnish readily identifiable structural steel in compliance with CBC Section 2203.1.

3. *High Strength Bolts, Nuts And Washers:*

   A. Type: ASTM A325, bearing type with threads included in shear plane (A325-N), unless noted otherwise. Provide slip-critical high strength bolts (A325-SC) only where specifically indicated.
   B. Tightening: Snug tight for A325-N bolts. Tighten A325-SC bolts to at least the minimum proper tension using one of the following tightening methods: Turn-of-nut, calibrated wrench or direct tension indicator tightening.

4. *Welding:*

   A. Welding Standard: ANSI/AWS D1.1.
   B. Welding Processes: Electric arc using E70XX electrodes. Submerged arc process with automatic welding (SAW-1) may be used as an alternative.
   C. Pre-qualified and Non Pre-Qualified Welds: Welds shall be pre-qualified in compliance with welding standard. Where non pre-qualified welds are specifically indicated, qualify by test and procedure qualification test record complying with welding standard.
   D. Welder Certification: Governing Code Authority.
   E. Shop Welding Including Ultrasonic Testing of Complete Penetration Groove Welds Welded in Shop: Perform on premises of an approved fabricator as defined in CBC Section 1704.2.2.
   F. Minimum Fillet Weld Size: AISC Specification Section J2 Table J2.4.
   G. Shop and Field Weld Identification On Drawings: No attempt is made to differentiate between shop and field welded connections.

5. *Shoring:* Building structural steel is designed for unshored construction unless noted otherwise.

6. *Shop Drawings:* Submit To Architect (Structural Engineer) for review and, upon request, to governing code authority.

Steel Stairs

1. *Design Responsibility:* Contractor to design and obtain separate Governing Code Authority approval for steel stairs prior to fabrication except stairs specifically designed and detailed on contract documents.

2. *Stair Design:* Design components for imposed forces including lateral restraint complying with applicable governing code and contract documents. If building lateral resisting system is used for stair lateral restraint, indicate load paths to building lateral resisting system in calculations and show connections on shop drawings. Where building provides vertical support for stair, indicate loads and load paths to building in calculations and show connections on shop drawings.

3. *Foundation Design:* Base on recommendations in geotechnical report as referenced in Foundations section of general notes.

4. *Shop Drawings and Structural Calculations:* Submit for fabrication and erection of steel stairs signed and sealed by a registered civil engineer to Architect (Structural Engineer) and to Governing Code Authority.

5. *Stabilizing Elements at Structural Members:* Provide to resist eccentric loading, horizontal deflection, twisting, or warping at no additional cost to Owner.

Metal Decking

1. *Floor Decking:*

   A. Floor Decking and Accessories: ASTM A1008-11, Grade C, finish per Architect, designed for un-shored construction.
   B. Vented Decking: Provide where vapor-impervious membrane occurs over fill.
   C. Shear Studs: ASTM A108-93(1995), Grades 1015 or 1020, 3/4 inch diameter round-headed studs.
      1. Shear Stud Welding: AWS D1.1-96, automatic machine welding.
      2. Welder Certification: Governing Code Authority.
      3. Do not lap 18 gauge decking or thicker where shear studs are to be welded to supports.
   D. Shoring: Floor decking is designed for un-shored construction, except as noted, to maximum spans indicated. If conditions occur where spans exceed maximum, provide adequate shoring or heavier gauge decking; the latter subject to review by Architect (Structural Engineer).

2. Roof decking:

   A. Roof Decking and Accessories: ASTM A1008-11, Grade C, finish per Architect, designed for un-shored construction.
   B. Loads suspended from roof decking: Limit to suspended acoustical tile ceilings including light fixtures. Submit methods of support from roof framing for other suspended elements to Architect (Structural Engineer) for review.

3. *Shop Drawings:* Submit to Architect (Structural Engineer) for review.

4. *Deck Bearing at Supports:* 1-5/8 inches minimum.

5. *Deck Lap at Ends:* 2 inches minimum, center laps over supports. Center laps over one top chord angle at open-web steel joists.

6. *Closures at Deck Penetrations (Including Those Not Shown on Structural Drawings):* 16 gauge, welded to decking or supports.

7. *Deck Welding:* AWS D1.3 and UBC Chapter 22, Division VII using a minimum of E60XX electrodes.

   A. Welder Certification: Governing Code Authority.
   B. Weld Washers: As required per Applicable Code.

Window Walls, Skylights and Storefronts

1. *Design Responsibility:* Contractor to design and obtain separate Governing Code Authority approval for window walls, skylights and storefronts prior to fabrication.

2. *Window Wall, Skylight and Storefront Design:* Design components for imposed forces including lateral restraint complying with applicable governing code and contract documents. Where building provides vertical or lateral support for window wall, skylights or storefront, indicate loads and load paths to building in calculations and show connections on shop drawings.

3. *Foundation Design:* Base on recommendations in geotechnical report as referenced in Foundations section of general notes.

4. *Shop Drawings and Structural Calculations:* Submit for fabrication and erection of window wall, skylights and storefront signed and sealed by a registered civil engineer to Architect (Structural Engineer) and to Governing Code Authority.

5. *Stabilizing Elements at Structural Members:* Provide to resist eccentric loading, horizontal deflection, twisting, or warping at no additional cost to Owner.

Light Gauge Metal Studs

1. *Non-Load Bearing Metal Studs:* No attempt is made to show or indicate on structural drawings. For information on non-load bearing metal studs, including exterior walls, see architectural drawings and specifications.

Cast-In-Place Concrete

1. *Applicable Standard:* ACI 301.

2. *Portland Cement:* ASTM C150, Type II.

3. *Normal Weight Concrete (145 pcf):* ASTM C33 for aggregates of natural sand and rock. Concrete to attain the following 28-day minimum compressive strength (f'c), unless noted otherwise:

   Retaining Walls .... 3000 psi
   Continuous Footings .... 3000 psi
   Spread Footings .... 3000 psi
   Slabs On Grade .... 3000 psi
   Shear Walls .... 5000 psi
   Columns .... 5000 psi
   Structural Slabs and Beams .... 5000 psi
   Concrete over Metal Deck .... 3000 psi

   Maximum Aggregate Sizes: 1-1/2 inches at foundations and 1 inch elsewhere.

4. *Light Weight Concrete (115 pcf):* ASTM C330, expanded shale light weight aggregates of pea gravel size. Provide 4 to 7 percent entrained air for light weight concrete over metal decking. Concrete to attain a minimum concrete strength (f'c) of 3000 psi at 28 days.

5. *Lean Concrete:* Where specifically indicated, containing 2 sacks of cement per cubic yard of concrete.

6. *Maximum Slump:* 5 inches. 4 inches in flatwork.

7. *Shrinkage:* ASTM C157, limit to 0.055 percent.

8. *Use of Chlorides:* Not permitted.

9. *Concrete Mix Design Data:* Submit for each type and compressive strength of concrete required signed and sealed by a registered civil engineer in state to Architect (Structural Engineer). Base mix design on field experience or trial mixtures as stipulated in CBC Section 1905.3.

10. *Shop Drawings:* Submit to Architect (Structural Engineer) indicating locations of concrete construction joints prior to placing concrete. Locate joints at locations to minimize effects of shrinkage as well as being placed at points of low stress.

11. *Conduits, Pipes, and Sleeves:* Do not embed other than electrical conduits 1 inch outside diameter and smaller in structural concrete. Locate electrical conduit 4 inches apart minimum and within middle third of member height.

12. *Chamfered Corners:* Provide ¾ inch chamfer at exposed corners of columns, beams and walls unless detailed otherwise.

13. *Construction Joints:* Provide keys unless detailed otherwise. Roughen surface to ¼ inch amplitude. Thoroughly clean, remove laitance and thoroughly wet and remove standing water before placing new concrete.

14. *Concrete Abutting Structural Masonry Walls:* Roughen concrete surface to full amplitude of 1/16 inch.

15. *Curing:* Maintain concrete above 50 degrees Fahrenheit and in a moist condition for a minimum of 7 days after placement unless otherwise accepted by Architect (Structural Engineer).

Masonry

1. *Specified Compressive Strength of Masonry (f'm):* 1500 psi.

2. *Acceptable Methods for Verifying Specified Compressive Strength of Masonry (f'm):* Masonry prism testing, masonry prism test record, or unit strength method as defined in CBC Section 2105.

3. *Special Inspection for Structural Masonry:* Required per CBC Section 1704 since strength design method is used.

4. *Concrete Block:* ASTM C90, medium weight, Grade N-I attaining a minimum compressive strength as required to meet specified compressive strength of masonry (f'm).

5. *Mortar:* ASTM C270, Type S conforming with CBC Section 2103.8 and attaining a minimum compressive strength at 28 days of 1800 psi. Do not use masonry cement or plastic cement.

6. *Grout:* ASTM C476 or CBC Table 2103.12 attaining a minimum compressive strength as required to meet specified compressive strength of masonry (f'm). However, in no case shall grout compressive strength be less than 2000 psi at 28 days.

7. *Portland Cement:* Cast-in-place concrete section of general notes.

8. *Aggregates for Mortar and Grout:* ASTM C144 and C404of natural sand and rock.

9. *Reinforcing Steel:* Reinforcing steel section of general notes unless indicated otherwise.

10. *Reinforcing Steel Splices:* Lap reinforcing steel at splices a minimum of 72 bar diameters, unless noted otherwise. Where clear distance between bars at adjacent splices is 3 inches or less, increase lap length 30 percent unless splices are staggered at least 24 bar diameters.

11. *Dowels for Walls and Columns:* Match size and spacing of wall and column reinforcing steel, unless noted otherwise. Set dowels to align with cells containing reinforcing steel.

12. *Placement:* Set cells in vertical alignment.

13. *Grouting:* Grout solid all cells. Mechanically vibrate grout in cells.

    A. Horizontal Construction Joints: Hold grout 1 1/2 inches below top of masonry unit if work is stopped one hour or longer.
    B. Grout Cover Around Reinforcing Steel, Anchor Bolts and Inserts Penetrating Masonry Shell: 1 inch minimum

14. *Masonry Prism Data:* Submit for each type and compressive strength of masonry required. Signed and sealed by a registered civil engineer in state of California, to Structural Engineer. Compliance with minimum required compressive strength shall be based on CBC Section 2105.1.

Anchorages to Concrete or Masonry

1. *Drill and Epoxy Anchors:* Simpson Epoxy-Tie SET-XP anchoring adhesive complying with ICC-ESR 2508

2. *Mechanical Anchors:* Simpson Strong-Bolt expansion anchors complying with ICC-ESR 1771.

3. *Installation:* Per manufacturer's written instructions and referenced report.

   A. Drilling Holes in Existing Concrete or Masonry: Use only non-rebar cutting drill bits to drill holes. Locate existing rebar and post-tensioned strands where present prior to drilling holes. Do not cut or damage existing rebar or post-tensioned strands.
   B. Deleterious Materials: Keep anchors free of dust, grease, and other materials that impair bond. Holes shall be thoroughly cleaned per manufacturer's recommendations prior to installation of epoxy anchors (Deputy Inspector to verify).

Earthwork and Foundations

1. *Geotechnical Engineer:* Retained by Owner and satisfactory to Architect (Structural Engineer) and Governing Code Authority to perform required observations.

2. *Applicable Geotechnical Report:* Perform soils work complying with foundation design based on recommendations in report no. 11-81-118-01, prepared by Converse Consultants, dated 3/23/11 and subsequent addenda letters. Maintain at site a copy of report and addenda.

3. *Foundation Design Values:*

   Bearing Capacity .... 3,000 to 4,000 psf*
   Lateral Bearing Pressure .... 250 psf/ft*
   Coefficient of Friction 0.3*
   Soil Profile Type .... S_D

   *These values may be increased 33 percent for seismic or wind loading. Increase Lateral Bearing Pressure 200 percent for isolated pole type footings.

4. *Excavations, Backfill and Compaction of Backfill:* Comply with geotechnical report and requirements of CBC Section 1804 and performed only under observation of Geotechnical Engineer. Contractor is responsible for all excavation, lagging, shoring, underpinning and related procedures.

5. *Foundation Excavations:* Observed by and acceptable to Geotechnical Engineer prior to placement of fill, reinforcing steel, or concrete. Foundations are to bear on firm existing soil or approved compacted fill as indicated in geotechnical report. Slope sides of excavation not less than 1 vertical to 1 horizontal as indicated in geotechnical report. Cast concrete directly against excavated surfaces.

6. *Minimum Footing Depths:* 36 inches below adjacent grade (excluding landscaping soil) or finish floor, whichever is lower.

7. *Backfilling of Retaining Walls:* Place after completion and inspection of waterproofing. Adequately shore retaining walls during backfill operation. Unless adequately shored, do not place backfill behind building structure retaining walls (excluding site retaining walls) until concrete at elevated floor levels adjacent to walls are completely poured (in area) and have cured for at least 7 days.

8. *Water Exposure at Building Perimeter Footings:* At areas where sidewalks or paving do not immediately adjoin structure, provide positive drainage away from structure at building perimeter. Landscape irrigation is not permitted within five feet of building perimeter footings except when enclosed in protected planters with direct drainage away from structure or which complies with applicable code. Discharge from downspouts, roof drains and scuppers is not permitted onto unprotected soils within five feet of building perimeter. Refer to geotechnical report for complete requirements.

9. *Drainage System:* As required by geotechnical report. Retaining walls were not designed to resist hydrostatic pressure.

Reinforcing Steel

1. *Reinforcing Steel:*

   All bars unless indicated otherwise .... ASTM A615, Grade 60
   Bars to be welded .... ASTM A706, Grade 60

2. *Bars, Excluding Ties, in Ductile Moment Resisting Frames and Boundary Elements in Shear Walls:* ASTM A706, Grade 60 or A615, Grade 60, plus actual yield strength based on mill tests shall not exceed specified yield strength by more than 18,000 psi (retests shall not exceed this value by more than an additional 3,000 psi) and ratio of actual ultimate tensile stress to actual tensile yield strength shall not be less than 1.25.

3. *Wire Reinforcing:*

   Smooth welded wire fabric .... ASTM A185
   Deformed wire stirrups (D4 and larger only) .... ASTM A497

4. *Shop Drawings:* ACI 315, Part B. Show placement including splice locations and lengths and submit to Architect (Structural Engineer). Promptly notify Architect (Structural Engineer) prior to developing reinforcing steel shop drawings if insufficient clear distances between reinforcing steel or other congestion is encountered.

5. *Splice Locations:* As shown on drawings. If locations cannot be determined, verify with Architect (Structural Engineer) prior to developing shop drawings.

6. *Lap Lengths:* As shown on drawings. If lap lengths cannot be determined, verify with Architect (Structural Engineer) prior to developing shop drawings. Lap wire fabric 1-1/2 spaces (1 foot minimum).

7. *Minimum Clearances Between Parallel Reinforcing Steel Including Distance Between Sets of Spliced Bars:* 1 inch or 1 bar diameter, whichever is greater. 1-1/2 inches or 1-1/2 bar diameters, whichever is greater, at columns only. For bundled bars, minimum clear distances between units of bundled bars shall be same as single bars except bar diameter is derived from equivalent total area of bundle.

8. *Minimum Cast-in-Place Concrete Cover:* Min. cover, in.

   Slabs on Grade .... center of slab
   (a) Concrete Exposed to Earth or Weather (Unformed) 3
   (b) Concrete Exposed to Earth or Weather:
      Formed No. 6 through No. 18 Bars 2
      Formed No. 5 Bar and Smaller 1-1/2

9. *Wall and Column Dowels:* Match vertical reinforcing size and spacing, unless noted otherwise.

10. *Chairs or Spacers:* Plastic or plastic coated when resting on exposed surfaces.

11. *Welding:* AWS D1.4.

    A. Acceptable Reinforcing Steel for Welding: ASTM A706. If welding of reinforcing steel other than A706 is desired, submit proposed procedure, indicating conformance to code and requirements of Governing Code Authority, to Architect (Structural Engineer) for acceptance and to Governing Code Authority for approval prior to execution.
    B. Welder Certification: Governing Code Authority.

12. *Bending:* Bend cold unless otherwise accepted by Architect (Structural Engineer). Do not field-bend reinforcing steel bars embedded in concrete unless otherwise shown on contract documents or pre-approved by Structural Engineer.

Quality Assurance Cont.

CBC 1704.5.1 – Masonry	C	P	Reference
1. Compliance with required inspection provisions and the construction documents and the approved submittals shall be verified		X	ACI 530.1: 1.5
2. Verification of f'_m and f'_{aac} prior to construction except where specifically exempted.		X	ACI 530.1: 1.4B
3. Verification of slump flow and VSI as delivered to the site for self-consolidating grout	X		ACI 530.1: 1.5B.1.b.3
4. At the start of masonry construction verify the following to ensure compliance:			
a. Proportions of site-prepared mortar		X	ACI 530.1: 2.6A
b. Construction of mortar joints		X	ACI 530.1:3.3B
c. Location of reinforcement, connectors, and anchorages.		X	ACI 530.1: 3.4, 3.6A
5. During construction, verify:			
a. Size and location of structural elements		X	ACI 530.1: 3.3F
b. Type, size, and location of anchors, including other details of anchorage of masonry to structural members, frames or other construction.		X	ACI 530: 1.2.2(e), 1.16.1
c. Specified size, grade, and type of reinforcement and anchor bolts		X	ACI 530: 1.15 ACI 530.1: 2.4, 3.4
d. Welding of reinforcing bars	X		ACI 530: 2.1.9.7.2, 3.3.3.4(b)
e. Preparation, construction and protection of masonry during cold weather (temperature below 40° F) or hot weather (temperature above 90° F).		X	ACI 530.1: 1.8C, 1.8D CBC 2104.3, 2104.4
6. Prior to grouting the following shall be verified:			
a. Grout space is clean.		X	ACI 530.1: 3.2D
b. Placement of reinforcement and connectors.		X	ACI 530: 1.13 ACI 530.1: 3.4
c. Proportions of site-prepared grout		X	ACI 530.1: 2.6B
d. Construction of mortar joints.		X	ACI 530.1: 3.3B
7. Verify grout placement to ensure compliance with code and construction document provisions.	X		ACI 530.1: 3.5
8. Observe preparation of required grout specimens, mortar specimens, and/or prisms.	X		ACI 530.1: 1.4 CBC 2105.2.2, 2105.3

CBC 1704.3 – Steel	C	P	Reference
1. Material verification of high-strength bolts, nuts, and washers.			
a. Identification markings to conform to ASTM standards specified in the approved construction documents.		X	AISC 360: A3.3
b. Manufacturer's certificate of compliance required.		X	
2. Inspection of high-strength bolting:			
a. Snug-tight joints.		X	AISC 360: M2.5 CBC 1704.3.3
b. Pretensioned and slip-critical joints using turn-of-nut with matchmarking, twist-off bolt or direct tension indicator methods.		X	
c. Pretensioned and slip-critical joints using turn-of-nut without matchmarking or calibrated wrench methods.	X		
3. Material verification of structural steel and cold-formed steel deck:			
a. For structural steel, identification markings to conform to AISC 360.		X	AISC 360: M5.5
b. For other steel, identification markings to conform to ASTM standards specified in the approved construction documents.		X	Applicable ASTM standard(s)
c. Manufacturer's certified test reports		X	
4. Material verification of weld filler materials:			
a. Identification markings to conform to AWS specification in the approved construction documents	-	X	AISC 360: A3.5 AWS A5
b. Manufacturer's certificate of compliance required.	-	X	
5. Inspection of welding:			
a. Structural steel and cold-formed steel deck:			
1. Complete and partial penetration groove welds.	X		AWS D1.4 CBC 1704.3.1
2. Multipass fillet welds	X		
3. Single pass fillet welds > 5/16"	X		
4. Plug and slot welds	X		
5. Single pass fillet welds = 5/16"		X	
6. Floor and roof deck welds.		X	AWS D1.3
b. Reinforcing steel:			
1. Verification of weldability of reinforcing steel other than ASTM A706		X	AWS D1.4 ACI 318: 3.5.2
2. Welding of reinforcing steel.	X		
6. Inspection of steel frame joint details for compliance:			
a. Bracing and stiffening		X	CBC 1704.3.2
b. Member locations		X	
c. Joint details at each connection		X	

Structural Observation

1. *Definition:* Structural observation is required for the structural system in accordance with CBC Section 1710. Structural observation is the visual observation of elements and connections of structural system at significant construction stages and completed structure for general conformance to contract documents. Structural observation does not waive responsibility for inspections required of building inspector or testing laboratory.

2. *Structural Observer:* Owner will employ a civil or structural engineer or architect to perform structural observation. Engineer or architect will be registered or licensed in state of California.

3. *Evidence of Employment:* Structural Observer will provide evidence of employment by Owner. A letter from Owner or a copy of agreement for services will be sent to Governing Code Authority before first site visit. Structural Observer will also inform Owner of requirements for preconstruction meeting and will preside over this meeting.

4. *Preconstruction Meeting:* Owner or Owner's Representative will coordinate and call for meeting between Structural Engineer or Architect responsible for structural design, Structural Observer, Contractor, affected subcontractors and Testing Laboratory. Structural Observer will preside over this meeting. Purpose of meeting is to identify major structural elements and connections that affect vertical and lateral load resisting systems of structure and to review scheduling of required observations. A record of meeting will be included in first observation report.

5. *Required Site Visits:* Structural Observer will perform site visits at those steps in progress of work that allow for correction of deficiencies without substantial effort or uncovering of work involved. At a minimum, the following significant construction stages require site visits and an observation report from Structural Observer:

   Construction Stages — *Elements/Connections to be Observed*
   A.
   B.
   C.
   D.
   E.

6. *Observation Reports:* Structural Observer will prepare a report for each significant stage of construction observed. Original of observation report will be sent to governing code authority and will be signed and sealed (wet stamped) by responsible Structural Observer. One copy of observation report will be attached to approved construction documents. The copy attached to plans need not be sealed but shall be signed by responsible Structural Observer or their designee. Copies of report will also be given to Owner, Contractor, deputy inspector and Structural Engineer (if other than Structural Observer).

7. *Final Observation Report:* Structural Observer will submit a report that shows that all observed deficiencies were resolved and structural system generally conforms to approved construction documents.

General

1. *Applicable Code:* 2010 California Building Code (CBC).

   A. Design Wind Speed (CBC Section 1609): 85 mph, Exposure B.
   B. Design Seismic Criteria (CBC Section 1613 using static force procedure):

      Seismic Importance Factor I: 1.0
      Short Period MCE Acceleration S_S: 1.5
      Long Period MCE Acceleration S_1: 0.6
      Site Coefficients F_a & F_v: .... 1.0 & 1.5, respectively
      Response Modification Coefficient R: 5
      Soil Profile Type: .... S_D

2. *Governing Code Authority:* City of Riverside, Building and Safety Division

3. *Design Intent:* Contract documents indicate information sufficient to convey design intent. Review contract documents and verify field and existing conditions. Promptly notify Architect (Structural Engineer), prior to proceeding with work, if design intent requires further clarification.

4. *Submittals:* Review for completeness and compliance with contract documents prior to submission to Architect (Structural Engineer). Submit prior to fabrication. Submittal review is for general conformance with design intent and does not constitute an authorization to deviate from terms and conditions of contract. When indicated, provide a professional engineer's signature and seal applicable to state where project is located. Maintain at site a copy of reviewed and accepted submittals. Structural Engineer requires 10 working days from receipt of submittal for completion of review.

5. *Modifications and Substitutions:* Must be accepted in writing by Architect (Structural Engineer). No modification or substitution will be accepted via shop drawing review.

6. *Existing Drawings Use:* Prepared by RF McCann & Company, dated 3/18/08 including all addenda and revisions should be used to help clarify existing conditions.

7. *Contract Documents Use:* Perform structural related work and develop shop drawings considering contract documents in their entirety. See architectural drawings for top of floor and roof elevations, depressions, slopes, openings, curbs, drains, trenches, slab edge locations, wall overall dimensions and locations of openings not indicated on structural drawings. Any discrepancies between architectural and structural dimensions should be confirmed with the Architect (Structural Engineer) before starting work.

8. *Construction Means and Methods:* Not a part of contract documents. Perform construction means, methods, techniques, sequences and procedures complying with national, state and local safety ordinances. Site visits (including structural observation) by Architect (Structural Engineer) do not constitute supervision of construction means and methods.

9. *Typical Details:* Details titled as "Typical" are applicable throughout project and may not be specifically referenced herein. Contractor is responsible for identifying these details and understanding extent of their application prior to performing work.

Quality Assurance

1. *Testing Laboratory:* Retained by Owner and satisfactory to Architect (Structural Engineer) and Governing Code Authority to perform required tests and inspections of this contract and applicable code.

2. *Material Certification:* Submit laboratory test reports certifying reinforcing steel, stressing tendons, and structural steel are of identifiable tested stock to Owner, Testing Laboratory, Architect (Structural Engineer) and, upon request, to Governing Code Authority. Ensure materials are properly tagged for identification. If laboratory test reports cannot be made available or if material cannot be identified, Testing Laboratory will perform tests as directed by Architect (Structural Engineer). Contractor shall pay Testing Laboratory for costs related to tests and inspections of unidentifiable materials or materials furnished without laboratory test reports, materials found deficient after initial tests and inspections, or materials replacing deficient materials.

3. *Tests and Inspections Reports:* Testing Laboratory will submit stating compliance or noncompliance with contract documents to Owner, Contractor, Architect (Structural Engineer) and, upon request, to Governing Code Authority.

4. *Continuous Special Inspection:* Testing Laboratory will provide continuous inspection (noted as 'C' in tables below) complying with CBC Section 1704, unless otherwise noted. Periodic inspection (noted as 'P' in tables below) is not permitted unless specifically indicated below or otherwise accepted by Architect (Structural Engineer):

CBC 1704.7 – Inspection of Soils	C	P	Reference
1. Verify materials below footings are adequate to achieve the desired bearing capacity.		X	
2. Verify excavations are extended to proper depth and have reached proper material.		X	
3. Perform classification and testing of controlled fill materials.		X	
4. Verify use of proper materials, densities and lift thicknesses during placement and compaction of controlled fill.	X		
5. Prior to placement of controlled fill, observe subgrade and verify that site has been prepared properly.		X	

CBC 1704.4 – Concrete	C	P	Reference
1. Inspection of reinforcing steel, including prestressing tendons and placement.		X	ACI 318: 3.5, 7.1-7.7 CBC 1913.4
2. Inspection of reinforcing steel welding in accordance with CBC Table 1704.3 Item 5b.	-	-	AWS D1.4 ACI 318: 3.5.2
3. Inspect bolts to be installed in concrete prior to and during placement of concrete.	X		ACI 318: 8.1.3, 21.2.8 CBC 1911.5, 1912.1
4. Inspection of anchors installed in hardened concrete.		X	ACI 318: 3.8.6, 8.1.3, 21.2.8 CBC 1912.1
5. Verify use of required mix design.		X	ACI 318: Ch. 4, 5.2-5.4 CBC1912.1
6. At time fresh concrete is sampled to fabricate specimens for strength tests, perform slump and air content tests and determine the temperature of the concrete.	X		ASTM C172 ASTM C31 ACI 318: 5.6, 5.8 CBC 1913.10
7. Inspection of concrete and shotcrete placement for proper application techniques.	X		ACI 318: 5.9, 5.10 CBC 1913.6, 1913.7, 1913.8
8. Inspection for maintenance of specified curing temperature and techniques.		X	ACI 318: 5.11-5.13 CBC 1913.9
9. Verification of in-situ concrete strength, prior to stressing of tendons in post-tensioned concrete and prior to removal of shores and forms from beams and structural slabs.		X	ACI 318: 6.2
10. Inspect formwork for shape, location, and dimensions of the concrete member being formed.		X	ACI 318: 6.1.1

Structural Sheet Index

Sheet Number	Description
A-S001	GENERAL NOTES
A-S011	TYPICAL FOUNDATION and REINFORCING DETAILS
A-S012	TYPICAL SLAB ON GRADE DETAILS
A-S021	TYPICAL CMU WALL DETAILS
A-S022	TYPICAL CMU WALL DETAILS
A-S031	TYPICAL STRUCTURAL STEEL DETAILS
A-S032	TYPICAL METAL DECKING DETAILS
A-S033	TYPICAL ELEVATED FLOOR and ROOF DECK DETAILS
A-S111	MAIN/ORCHESTRA LEVEL FOUNDATION and BALCONY LEVEL FRAMING PLANS
A-S112	UPPER BALCONY LEVEL FRAMING and CROSS-AISLE LEVEL FRAMING PLANS
A-S113	ROOF FRAMING PLAN
A-S301	MISCELLANEOUS DETAILS
A-S302	MISCELLANEOUS DETAILS
A-S303	MISCELLANEOUS DETAILS

GENERAL NOTES

Bayley Construction
3730 S. Susan St.
Suite 200
Santa Ana, CA. 92704
CA. License 734880
Tel 714-540-8863
Fax 714-556-8863

Bayley Construction
8005 S.E. 28th St.
P.O. Box 9004
Mercer Island, WA. 98040
WA. License
BAYLEC034JC
Tel 206-621-8884
Fax 206-343-7728

BAYLEY CONSTRUCTION

Pacific Parking DESIGN
6 Venture, Suite 275 — 949.341.0066 t
Irvine, California 92618 — 949.341.0099 f

DLR Group WWCOT
Architecture Engineering Planning Interiors

4280 Latham Street, Suite H
Riverside, California 92501
T 951.682.0470
F 951.682.1801

wwcot.com
dlrgroup.com

Santa Monica
Sacramento
Riverside
Palm Springs
Modesto
Shanghai, China

Copyright © 2010, DLR Group Inc. of California
DBA DLR Group WWCOT, All Rights Reserved

REGISTERED PROFESSIONAL ENGINEER
SUZANNE DOW NAKAKI
SE 3119
EXP. 12/31/11
STRUCTURAL
STATE OF CALIFORNIA

Public Agency Submittal:
Issued for Bidding:
Issued for Construction:

Revisions:

A	04-08-2011	City Comments
C	05-12-2011	Bldg. Dept. Re-Submittal
1	09-19-2011	Bulletin 1

Phase I
FOX
ENTERTAINMENT
PLAZA
3605 Market Street
Riverside, CA 92501

City of Riverside

3900 Main Street, Riverside, CA 92522

Phase: CD
Revised : 2-10-11
DLR Group Project No. 75-10603-00

General Notes

Issued Date: Feb. 10, 2011
Drawn By: JT/MT/CG
Checked By: SDN

A-S001
Sheet №

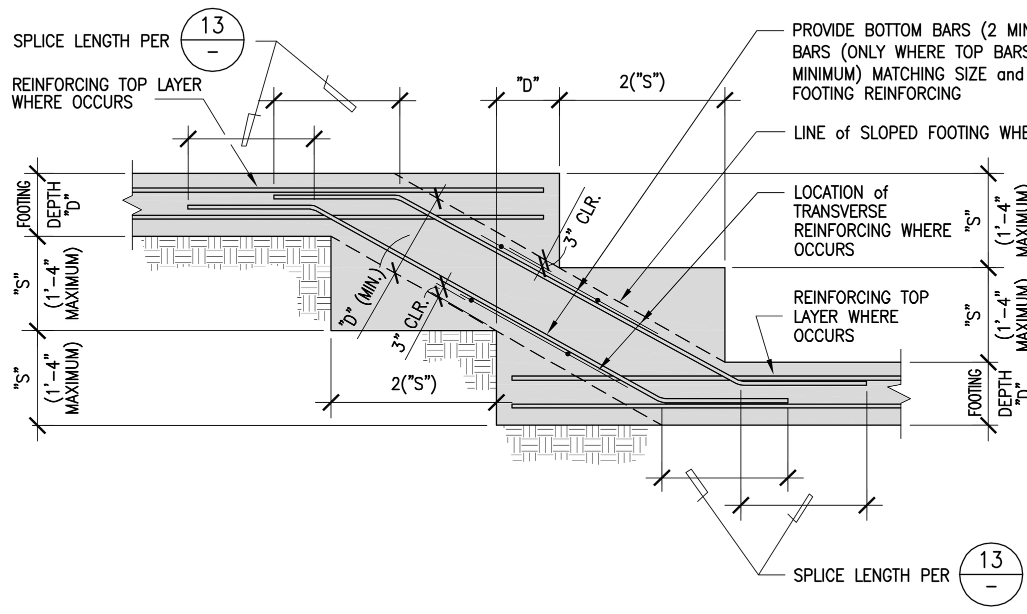

STEEP SLOPE CONDITION

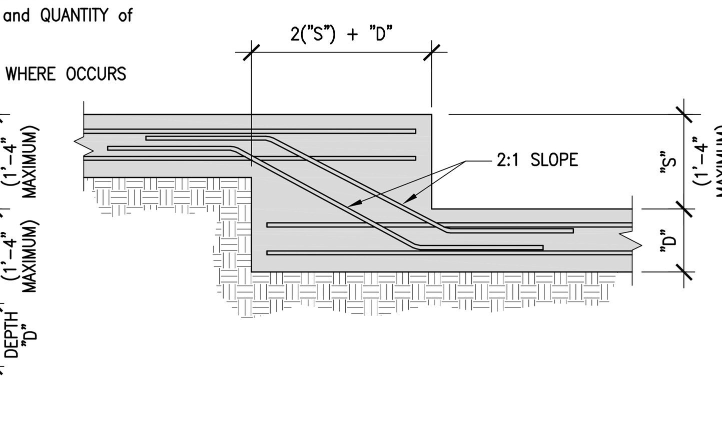

SHALLOW SLOPE CONDITION

FOR REMAINDER of INFORMATION SEE "STEEP SLOPE CONDITION"

NOTE:

S – – – S INDICATES STEPPED FOOTING SYMBOL as SHOWN on PLANS and ELEVATIONS. SYMBOL INDICATES STEP at TOP of FOOTING.

TYPICAL STEPPED or SLOPED FOOTING DETAIL — 16

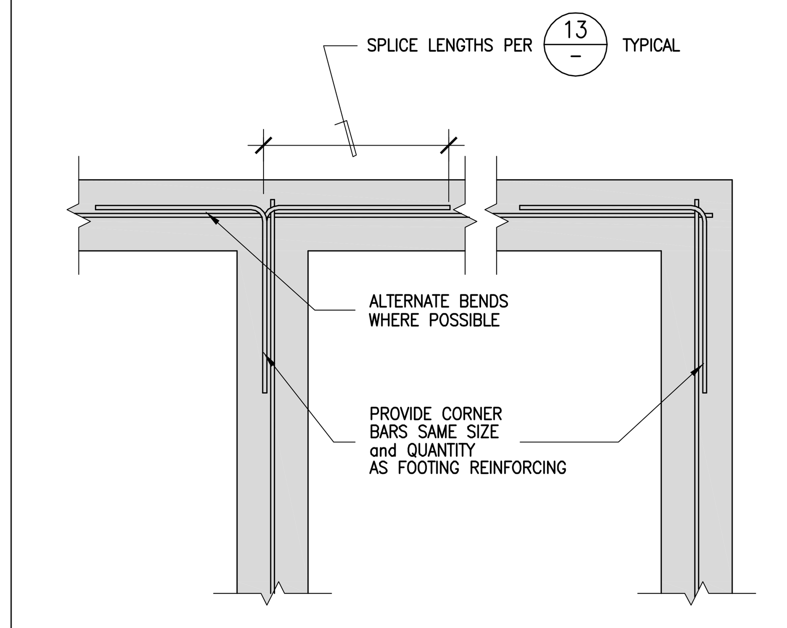

PLAN VIEW

TYPICAL FOOTING REINFORCING at CORNERS and INTERSECTIONS — 12

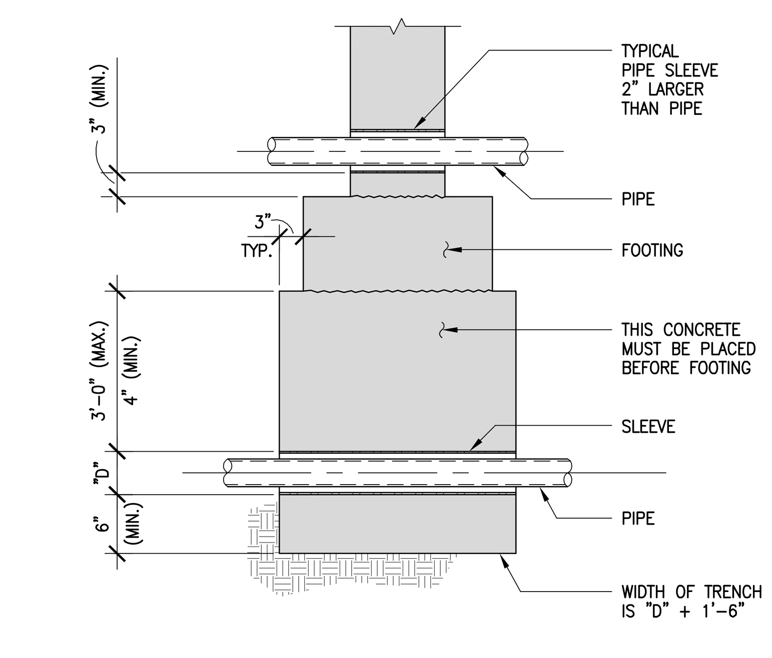

PIPES THRU FOUNDATION

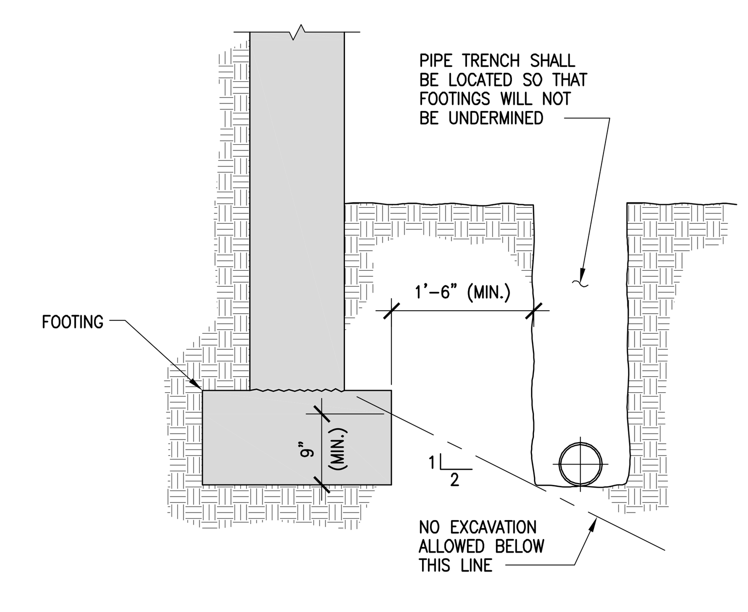

PIPE and TRENCH ADJACENT to FOUNDATION

TYPICAL PIPES THRU or TRENCHES ADJACENT to FOUNDATION DETAIL — 7

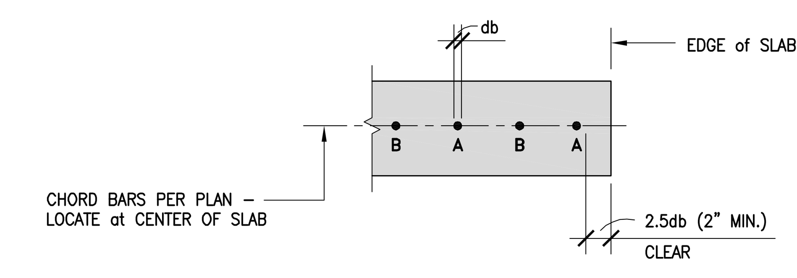

ELEVATED SLAB SECTION

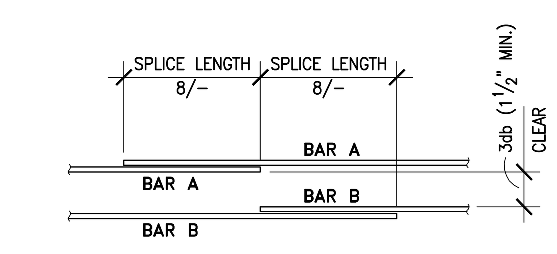

STAGGERED REINFORCING DIAGRAM

(PLAN VIEW)

TYPICAL CHORD BAR PLACEMENT in ELEVATED CONCRETE SLAB DETAIL — 4

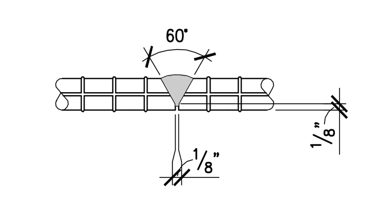

HORIZONTAL BARS

(#9 BARS and LARGER)

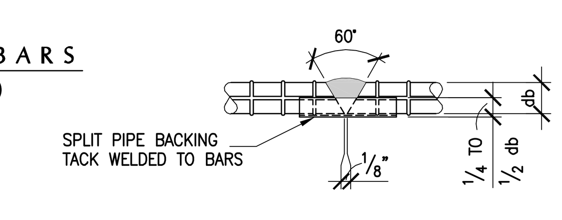

HORIZONTAL BARS

(SMALLER THAN #9 BARS)

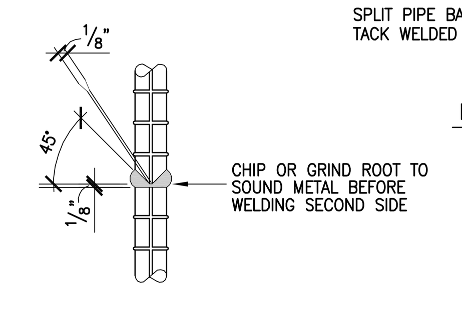

VERTICAL BARS

NOTES:

1. A PREQUALIFICATION TENSION TEST SHALL BE MADE BY AN APPROVED TESTING LABORATORY ON SAMPLES OF EVERY SIZE BAR BEING WELDED UTILIZING MATERIALS, CONDITIONS and WELDING PROCEDURES CONFORMING to CBC and REQUIREMENTS of GOVERNING CODE AUTHORITY.
2. BUTT WELDS SHALL BE STAGGERED AT ADJACENT BARS. NOTIFY ARCHITECT (STRUCTURAL ENGINEER) for APPROPRIATE OFFSET DISTANCES.
3. ALL BARS TO BE WELDED SHALL BE ASTM A706.

TYPICAL REINFORCING BUTT WELDS (ALTERNATE to SPLICES) — 3

TYPICAL NON-SEISMIC STRAIGHT BAR DEVELOPMENT LENGTH SCHEDULE

BAR SIZE		#3		#4		#5		#6		#7		#8		#9		#10		#11	
BAR DIAMETER (in)		0.375		0.500		0.625		0.750		0.875		1.000		1.128		1.270		1.410	
BAR COVER		TOP	BOT	TOP	BOT	TOP	BOT	TOP	BOT	TOP	BOT	TOP	BOT	TOP	BOT	TOP	BOT	TOP	BOT
3000 psi	C1	13	12	18	14	22	17	26	20	38	29	43	33	49	38	55	42	61	47
	C2	22	17	29	22	36	28	43	33	63	48	72	55	81	62	91	70	101	78
	C3	33	25	43	33	54	42	65	50	94	72	107	83	121	93	136	105	151	116
4000 psi	C1	12	12	15	12	19	15	23	18	33	25	37	28	42	33	47	37	53	41
	C2	19	15	25	19	31	24	37	29	54	42	62	48	70	54	79	61	87	67
	C3	28	22	37	28	47	36	56	43	81	63	93	72	105	81	117	90	131	101
5000 psi	C1	12	12	14	12	17	13	20	16	29	23	34	26	38	29	43	33	47	36
	C2	17	13	23	17	28	22	34	26	49	38	56	43	63	48	71	54	78	60
	C3	25	20	34	26	42	32	50	39	73	56	83	64	94	72	106	81	117	90
6000 psi	C1	12	12	12	12	16	12	19	14	27	21	31	24	34	27	39	30	43	33
	C2	16	12	21	16	26	20	31	24	44	34	51	39	57	44	64	50	71	55
	C3	23	18	31	24	38	29	46	35	66	51	76	58	86	66	96	74	107	82

TYPICAL NON-SEISMIC STRAIGHT BAR SPLICE LENGTH SCHEDULE

BAR SIZE		#3		#4		#5		#6		#7		#8		#9		#10		#11	
BAR DIAMETER (in)		0.375		0.500		0.625		0.750		0.875		1.000		1.128		1.270		1.410	
BAR COVER		TOP	BOT	TOP	BOT	TOP	BOT	TOP	BOT	TOP	BOT	TOP	BOT	TOP	BOT	TOP	BOT	TOP	BOT
3000 psi	C1	17	13	23	18	28	22	34	26	49	38	56	43	63	49	71	55	79	61
	C2	28	22	38	29	47	36	56	43	81	63	93	72	105	81	118	91	131	101
	C3	42	33	56	43	70	54	84	65	122	94	139	107	157	121	177	136	196	151
4000 psi	C1	15	12	20	15	25	19	29	23	43	33	49	37	55	42	62	47	68	53
	C2	25	19	33	25	41	31	49	37	71	54	81	62	91	70	102	79	114	87
	C3	37	28	49	37	61	47	73	56	106	81	121	93	136	105	153	118	170	131
5000 psi	C1	13	12	18	14	22	17	26	20	38	29	44	34	49	38	55	43	61	47
	C2	22	17	29	23	36	28	44	34	63	49	72	56	81	63	92	71	102	78
	C3	33	25	44	34	54	42	65	50	95	73	108	83	122	94	137	106	152	117
6000 psi	C1	12	12	16	12	20	16	24	19	35	27	40	31	45	34	50	39	56	43
	C2	20	16	27	21	33	26	40	31	58	44	66	51	74	57	84	64	93	71
	C3	30	23	40	31	49	38	59	46	86	66	99	76	111	86	125	96	139	107

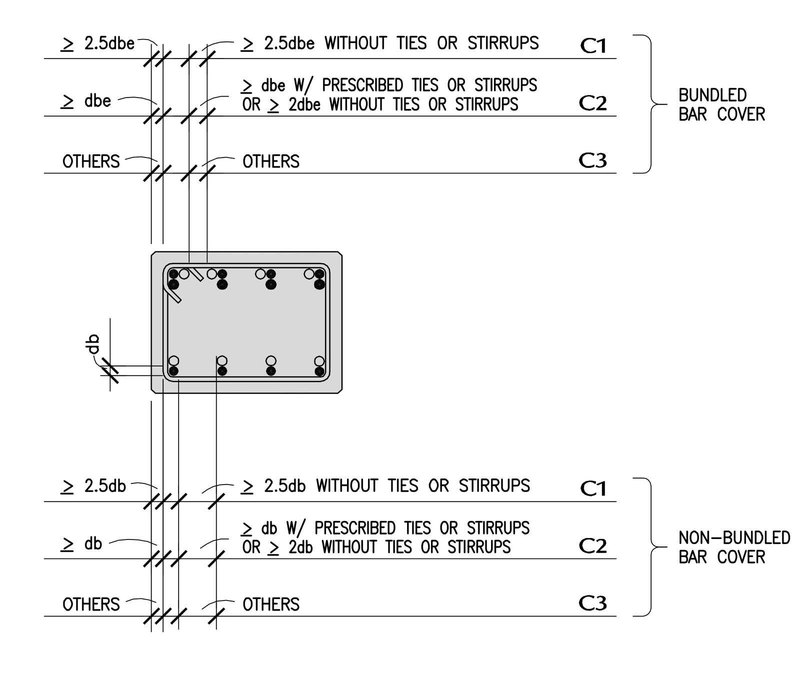

EFFECTIVE BUNDLED BAR UNIT DIAMETER "dbe"						
BAR	#6	#7	#8	#9	#10	#11
3-BAR BUNDLE	.35	.66	1.14	1.83	2.94	4.44
4-BAR BUNDLE	.63	1.17	2.03	3.25	5.23	7.90

NOTES:

1. ALL LENGTHS INDICATED IN SCHEDULE APPLY TO NORMAL WEIGHT CONCRETE APPLICATIONS.
2. FOR LIGHT WEIGHT CONCRETE APPLICATIONS, LENGTHS INDICATED IN SCHEDULE SHALL BE MULTIPLIED BY 1.3.
3. NO EPOXY COATING.
4. FOR DETERMINING APPLICABLE BAR LAYOUT for BUNDLED BARS, USE EFFECTIVE BAR UNIT DIAMETER "dbe" as SCHEDULED.
5. SEE NOTES 6 – 9 ON DETAIL 9/–.

BAR COVER DIAGRAM

TYPICAL GRADE 60 NON-SEISMIC REINFORCING SPLICE and DEVELOPMENT LENGTH SCHEDULE — 13

TYPICAL SEISMIC BAR DEVELOPMENT and SPLICE LENGTH SCHEDULE

BAR SIZE			#3		#4		#5		#6		#7		#8		#9		#10		#11	
BAR DIAMETER (in)			0.375		0.500		0.625		0.750		0.875		1.000		1.128		1.270		1.410	
BAR LOCATION			TOP	BOT	TOP	BOT	TOP	BOT	TOP	BOT	TOP	BOT	TOP	BOT	TOP	BOT	TOP	BOT	TOP	BOT
3000 psi	A	HOOKED WITHIN CORE	7	7	9	9	11	11	13	13	15	15	17	17	19	19	22	22	24	24
	B	STRAIGHT WITHIN CORE	23	16	30	22	37	27	45	32	52	37	59	42	67	48	75	54	84	60
	C	STRAIGHT OUTSIDE CORE	36	26	48	34	59	43	71	51	83	59	95	67	107	76	120	86	134	96
4000 psi	A	HOOKED WITHIN CORE	6	6	8	8	10	10	11	11	13	13	15	15	17	17	19	19	21	21
	B	STRAIGHT WITHIN CORE	21	15	26	19	32	23	39	28	45	32	52	37	58	42	65	47	72	52
	C	STRAIGHT OUTSIDE CORE	34	24	41	30	52	36	62	44	72	52	82	59	93	66	104	75	116	83
5000 psi	A	HOOKED WITHIN CORE	6	6	7	7	9	9	10	10	12	12	14	14	15	15	17	17	19	19
	B	STRAIGHT WITHIN CORE	21	15	23	17	29	21	35	25	40	29	46	33	52	37	58	42	65	46
	C	STRAIGHT OUTSIDE CORE	34	24	37	27	46	33	55	40	64	46	74	53	83	59	93	67	104	74
6000 psi	A	HOOKED WITHIN CORE	6	6	6	6	8	8	9	9	11	11	12	12	14	14	16	16	17	17
	B	STRAIGHT WITHIN CORE	21	15	21	15	26	19	32	23	37	26	42	30	47	34	53	38	59	42
	C	STRAIGHT OUTSIDE CORE	34	24	34	24	42	30	50	36	59	42	67	48	76	54	85	61	95	68

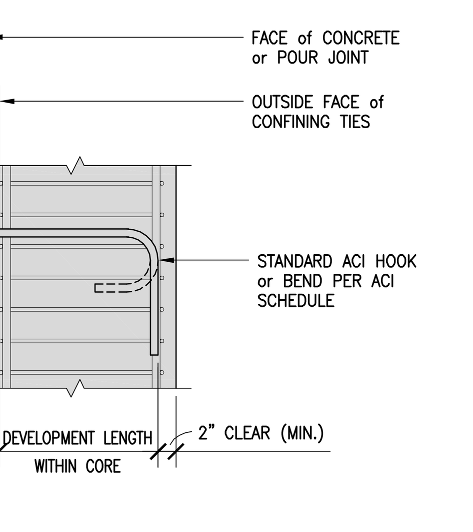

(A) BAR LOCATION

(HOOKED WITHIN CORE)

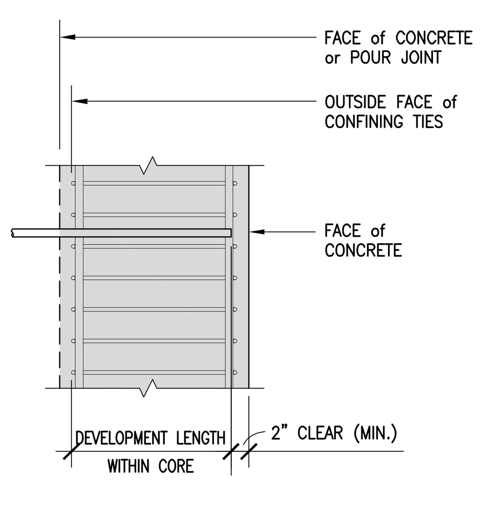

(B) BAR LOCATION

(STRAIGHT WITHIN CORE)

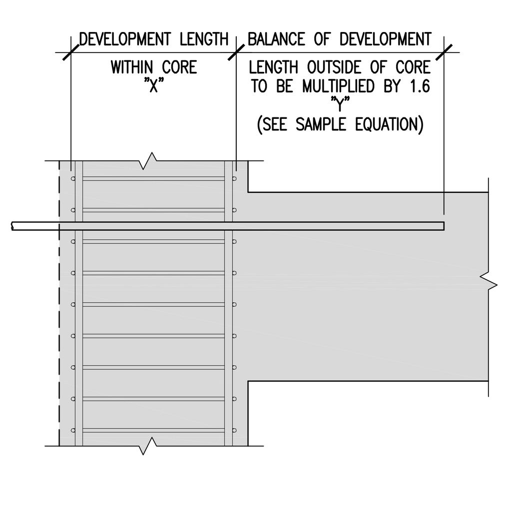

(C) BAR LOCATION

(STRAIGHT OUTSIDE CORE)

NOTE:

STRAIGHT BARS TERMINATING AT A JOINT SHALL PASS THROUGH THE CONFINED CORE OF A SEISMIC COLUMN OR BOUNDARY ELEMENT. ANY PORTION OF THE STRAIGHT EMBEDMENT NOT WITHIN THE CONFINED CORE SHALL BE INCREASED BY A FACTOR OF 1.6. (SEE EQUATION BELOW)

SAMPLE EQUATION FOR DETAIL C:

DEVELOPMENT OF #8 TOP BAR (STRAIGHT) IN 5000 PSI CONCRETE

REQUIRED STRAIGHT DEVELOPMENT LENGTH WITHIN CORE PER SCHEDULE = 46"

(X) CORE DIMENSION = 27"

(Y) BALANCE OF DEVELOPMENT LENGTH = (46" – 27") = 19"
MULTIPLY 19" x 1.6 (AND ROUND UP) = 31"

THEREFORE, TOTAL DEVELOPMENT LENGTH REQUIRED IS (X + Y) OR,
27" + 31" = 58"

NOTES:

1. ALL HOOKED BARS SHALL EXTEND AS FAR AS POSSIBLE TO THE OPPOSITE FACE WITH A MINIMUM 2" END COVER and EMBEDMENT NOT LESS THAN THE DEVELOPMENT SCHEDULE.
2. MINIMUM SIDE COVER 2 1/2".
3. ALL LENGTHS INDICATED IN SCHEDULE APPLY TO NORMAL WEIGHT CONCRETE APPLICATIONS.
4. FOR LIGHT WEIGHT CONCRETE APPLICATIONS, LENGTHS INDICATED IN SCHEDULE SHALL BE MULTIPLIED BY 1.25.
5. NO EPOXY COATING.
6. TOP BARS ARE HORIZONTAL BARS WITH MORE THAN 12 INCHES OF CONCRETE CAST BELOW.
7. BOTTOM BARS ARE HORIZONTAL BARS WITH LESS THAN 12 INCHES OF CONCRETE CAST BELOW, AND ALL VERTICAL BARS.
8. FOR GRADE 75 REINFORCING MULTIPLY THE LENGTHS IN THE SCHEDULE BY 1.25.
9. FOR SPLICES OR DEVELOPMENT OF INDIVIDUAL BARS WITHIN A BUNDLE: FOR 3 BAR BUNDLES MULTIPLY THE SCHEDULE LENGTHS BY 1.20. FOR 4 BAR BUNDLES MULTIPLY THE SCHEDULE LENGTHS BY 1.33. ENTIRE BUNDLE SETS SHALL NOT BE LAP SPLICED.

TYPICAL GRADE 60 SEISMIC REINFORCING SPLICE and DEVELOPMENT LENGTH SCHEDULE — 9

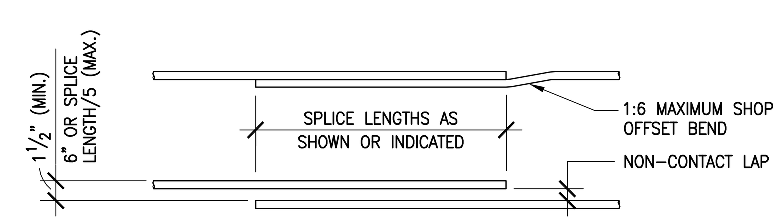

TYPICAL SPLICE DIAGRAM

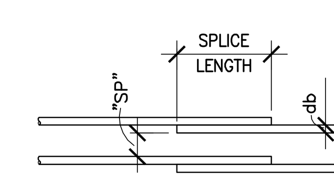

CLEAR BAR SPACING "SP"

(NON–STAGGERED SPLICES)

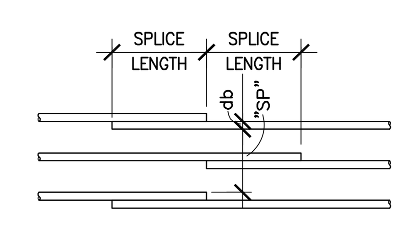

INCREASED CLEAR BAR SPACING "SP"

(STAGGERED SPLICES)

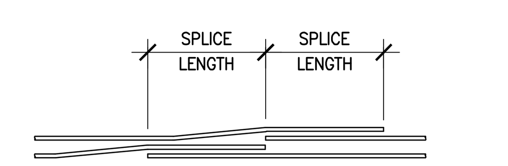

3-BAR BUNDLE SPLICE DIAGRAM

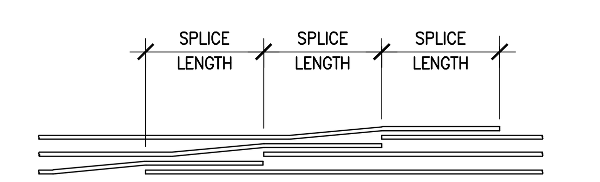

4-BAR BUNDLE SPLICE DIAGRAM

NOTES:

1. BUNDLED BARS of MORE THAN 2 BARS INCLUDING SPLICING BAR in SAME PLANE is NOT PERMITTED. ACCEPTABLE PROFILES ARE ∴ & ∷ .
2. DO NOT SPLICE MORE THAN ONE BAR PER LOCATION in a BUNDLE.
3. ENTIRE BUNDLE SETS SHALL NOT BE LAP SPLICED.

TYPICAL REINFORCING SPLICE DETAILS — 5

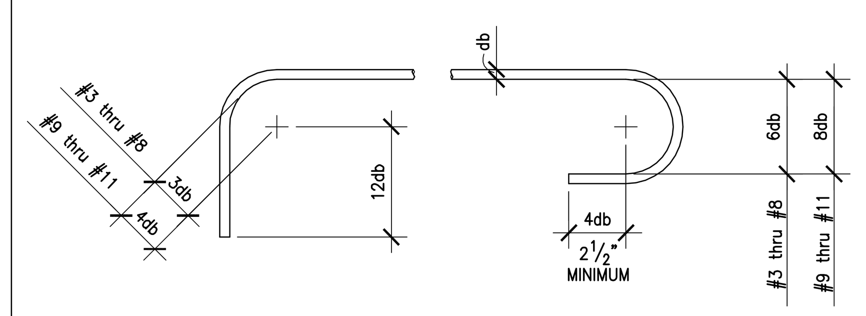

STANDARD HOOKS OTHER THAN STIRRUPS and TIES

BAR DIAMETER DISTANCES									
BAR DIAMETERS	BAR SIZE								
	#3	#4	#5	#6	#7	#8	#9	#10	#11
3db	$1\frac{1}{8}$"	$1\frac{1}{2}$"	$1\frac{7}{8}$"	$2\frac{1}{4}$"	$2\frac{5}{8}$"	3"	–	–	–
4db	$1\frac{1}{2}$"*	2"*	$2\frac{1}{2}$"	3"	$3\frac{1}{2}$"	4"	$4\frac{1}{2}$"	5"	$5\frac{1}{2}$"
6db	$2\frac{1}{4}$"*	3"	$3\frac{3}{4}$"	$4\frac{1}{2}$"	$5\frac{1}{4}$"	6"	–	–	–
8db	–	–	–	–	–	–	9"	10"	11"
12db	$4\frac{1}{2}$"	6"	$7\frac{1}{2}$"	9"	$10\frac{1}{2}$"	12"	$13\frac{1}{2}$"	15"	$16\frac{1}{2}$"

* INDICATES MINIMUM DIMENSIONS MAY GOVERN

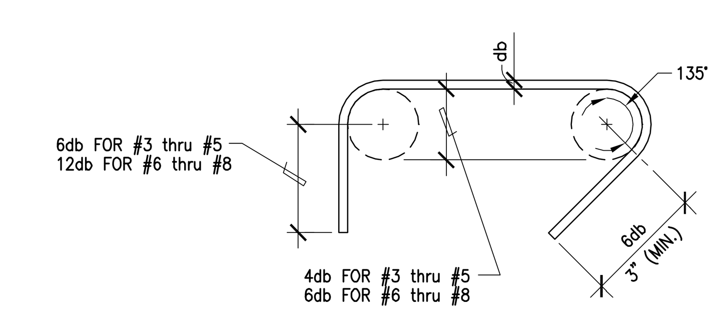

STANDARD HOOKS for STIRRUPS and TIES

STANDARD ACI REINFORCING STEEL HOOKS, BENDS and LAPS — NO SCALE TYPICAL U.N.O. — 1

Bayley Construction
3730 S. Susan St.
Suite 200
Santa Ana, CA. 92704
CA. License 734880
Tel 714-540-8863
Fax 714-556-8863

Bayley Construction
8005 S.E. 28th St.
P.O. Box 9004
Mercer Island, WA. 98040
WA. License BAYLEC034JC
Tel 206-621-8884
Fax 206-343-7728

BAYLEY CONSTRUCTION

Pacific Parking DESIGN
6 Venture, Suite 275
Irvine, California 92618
949.341.0066 t
949.341.0099 f

DLR Group WWCOT
Architecture Engineering Planning Interiors
4280 Latham Street, Suite H
Riverside, California 92501
T 951.682.0470
F 951.682.1801
wwcot.com
dlrgroup.com

Santa Monica
Sacramento
Riverside
Palm Springs
Modesto
Shanghai, China

Copyright © 2010, DLR Group Inc. of California
DBA DLR Group WWCOT, All Rights Reserved

REGISTERED PROFESSIONAL ENGINEER SUZANNE DOW NAKAKI SE 3119 EXP. 12/31/11 STRUCTURAL STATE OF CALIFORNIA

Public Agency Submittal:
Issued for Bidding:
Issued for Construction:

Revisions:

A	04-08-2011	City Comments
C	05-12-2011	Bldg. Dept. Re-Submittal
1	09-19-2011	Bulletin 1

Phase I
FOX ENTERTAINMENT PLAZA
3605 Market Street
Riverside, CA 92501

City of Riverside
CITY OF RIVERSIDE
3900 Main Street, Riverside, CA 92522

Phase: CD
Revised : 2-10-11
DLR Group Project No. 75-10603-00

Typical Foundation and Reinforcing Details

Issued Date: Feb. 10, 2011
Drawn By: JT/MT/CG
Checked By: SDN

A-S011
Sheet №

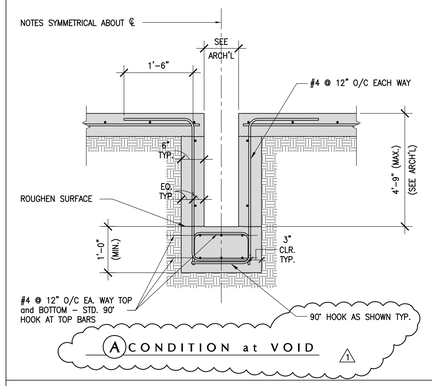

A CONDITION at VOID

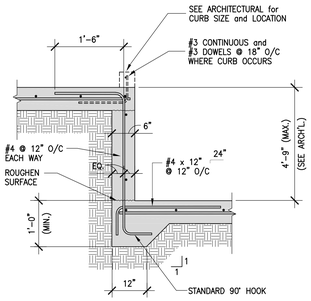

TYPICAL CONDITION

TYPICAL INTERIOR RETAINING WALL (4'-9" MAX. HEIGHT) | 12

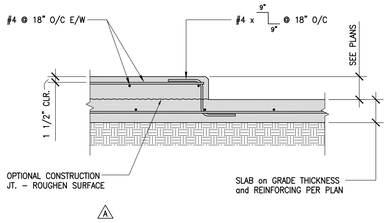

TYPICAL CONCRETE PAD at SLAB ON GRADE | 15

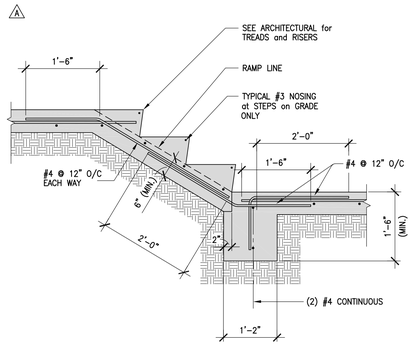

TYPICAL STEPS on GRADE | 11

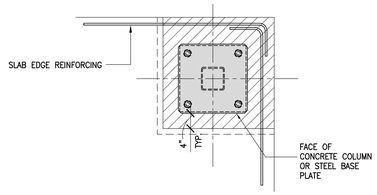

PLAN at CORNER COLUMN

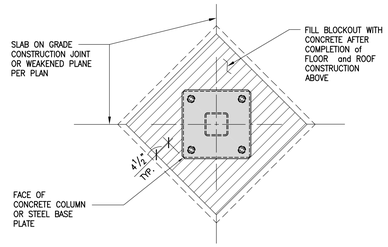

PLAN at INTERIOR COLUMN

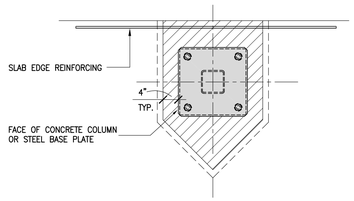

PLAN at PERIMETER COLUMN

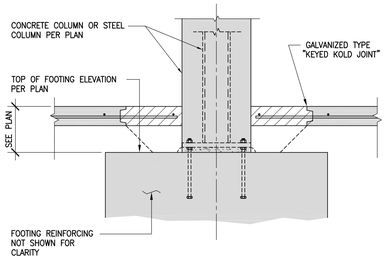

SECTION at FOUNDATION

TYPICAL SLAB-ON-GRADE BLOCKOUT DETAILS | 3

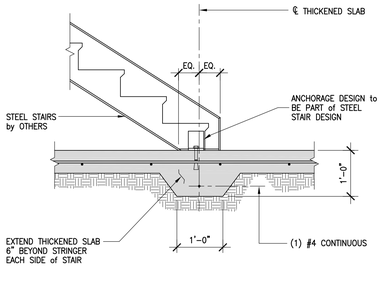

TYPICAL THICKENED SLAB at STAIR | 16

SPREAD FOOTING SCHEDULE

MARK	SIZE	THICKNESS	REINFORCING
F4	4' SQ.	24"	(5) #6 EACH WAY BOTTOM
F9	9' SQ.	25"	(10) #6 EACH WAY BOTTOM
F10	10'-0"x4'-0"	36"	(6) #7 (B) @ 9" LONGITUDINAL (13) #7 (B) @ 9" TRANSVERSE
F16	16'-6"-0"x9'-0"	36"	#7 @ 9" O/C EACH WAY TOP and BOTTOM

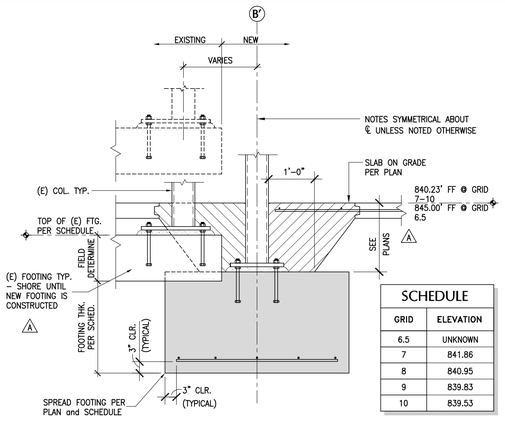

SCHEDULE

GRID	ELEVATION
6.5	UNKNOWN
7	841.86
8	840.95
9	839.83
10	839.53

AT HSS COLUMN ADJACENT TO (E) STAIR FOOTING

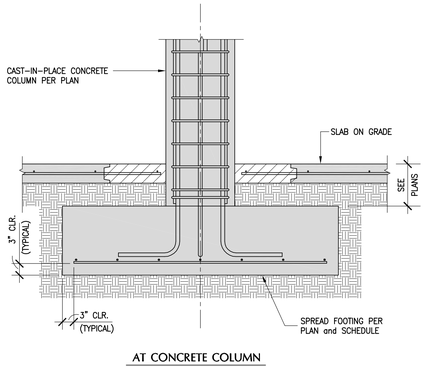

AT CONCRETE COLUMN

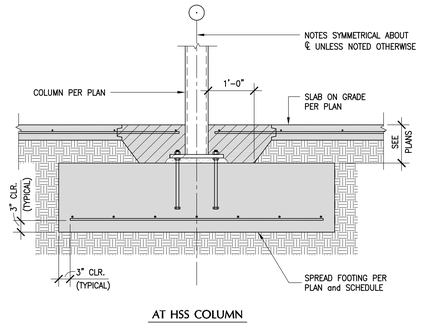

AT HSS COLUMN

TYPICAL SPREAD FOOTING DETAIL | 9

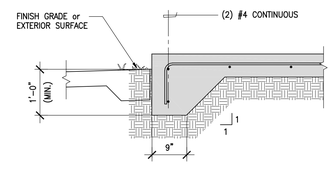

E EDGE of SLAB

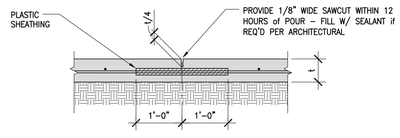

B WEAKENED PLANE
(W.P. PER PLANS)

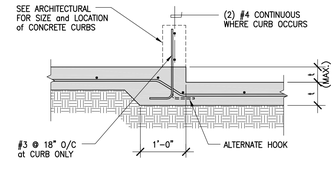

D SLAB DEPRESSION

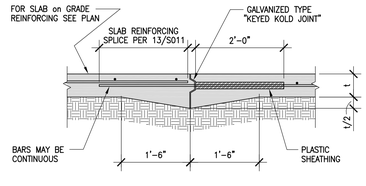

A CONSTRUCTION JOINT
(C.J. PER PLANS)

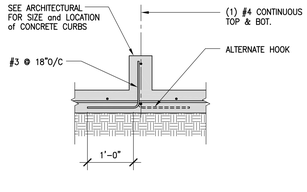

C CURB ON GRADE

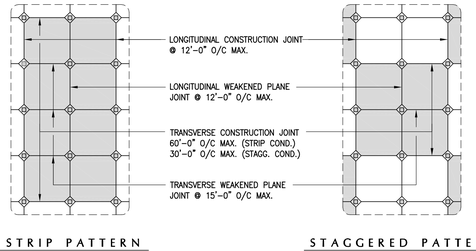

STRIP PATTERN

STAGGERED PATTERN

TYPICAL CONCRETE SLAB on GRADE DETAILS | NO SCALE TYPICAL U.N.O. | 1

Bayley Construction
3730 S. Susan St.
Suite 200
Santa Ana, CA, 92704
CA. License 734880
Tel 714-540-8863
Fax 714-556-8863

Bayley Construction
8005 S.E. 28th St.
P.O. Box 9004
Mercer Island, WA. 98040
WA. License
BAYLEC034JC
Tel 206-621-8884
Fax 206-343-7728

BAYLEY CONSTRUCTION

Pacific Parking DESIGN
6 Venture, Suite 275 949.341.0066 t
Irvine, California 92618 949.341.0099 f

DLR Group WWCOT
Architecture Engineering Planning Interiors

4280 Latham Street, Suite H
Riverside, California 92501
T 951.682.0470
F 951.682.1801

wwcot.com
dlrgroup.com

Santa Monica
Sacramento
Riverside
Palm Springs
Modesto
Shanghai, China

Copyright © 2010, DLR Group Inc. of California
DBA DLR Group WWCOT, All Rights Reserved

REGISTERED PROFESSIONAL ENGINEER SUJANEE DOW WALZ SE 31119 Exp. 12/31/11 STRUCTURAL STATE OF CALIFORNIA

Public Agency Submittal:
Issued for Bidding:
Issued for Construction:

Revisions:

#		
A	04-08-2011	City Comments
C	05-12-2011	Bldg. Dept. Re-Submittal
1	09-19-2011	Bulletin 1

NOT FOR CONSTRUCTION

Phase I
FOX ENTERTAINMENT PLAZA
3605 Market Street
Riverside, CA 92501

City of Riverside

CITY OF RIVERSIDE

3900 Main Street, Riverside, CA 92522

Phase: CD
Revised : 2-10-11
DLR Group Project No. 75-10603-00

Typical Slab On Grade Details

Issued Date: Feb. 10, 2011
Drawn By: JT/MT/CG
Checked By: SDN

A-S012
Sheet №

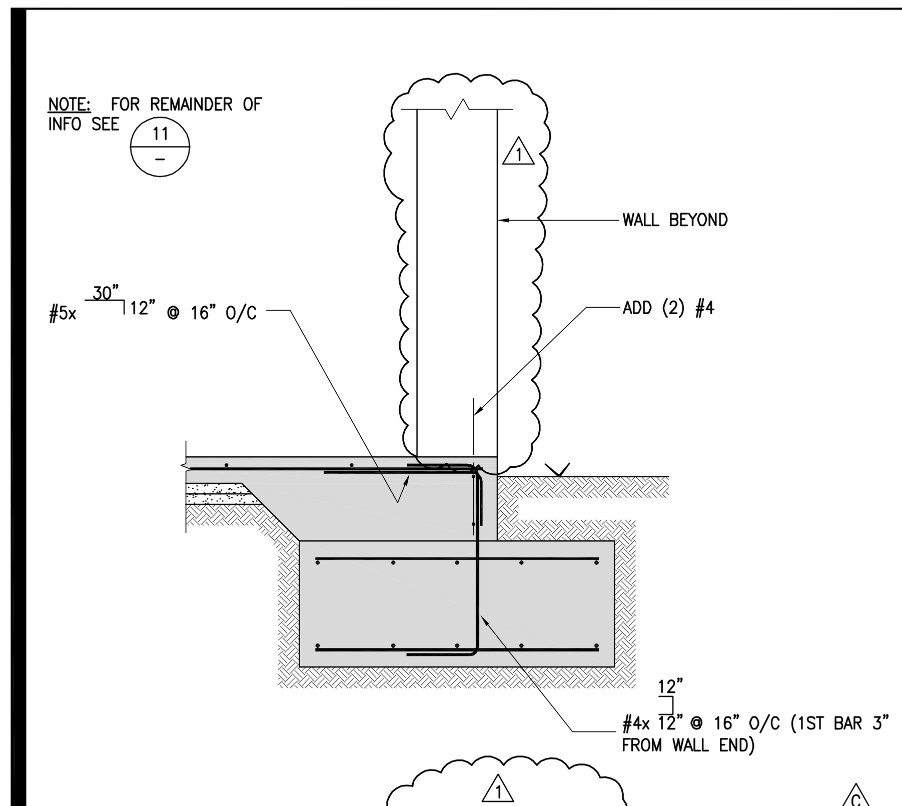

TYPICAL OPENING IN 16" CMU MASONRY WALL AT CONTINUOUS FTG. — 12

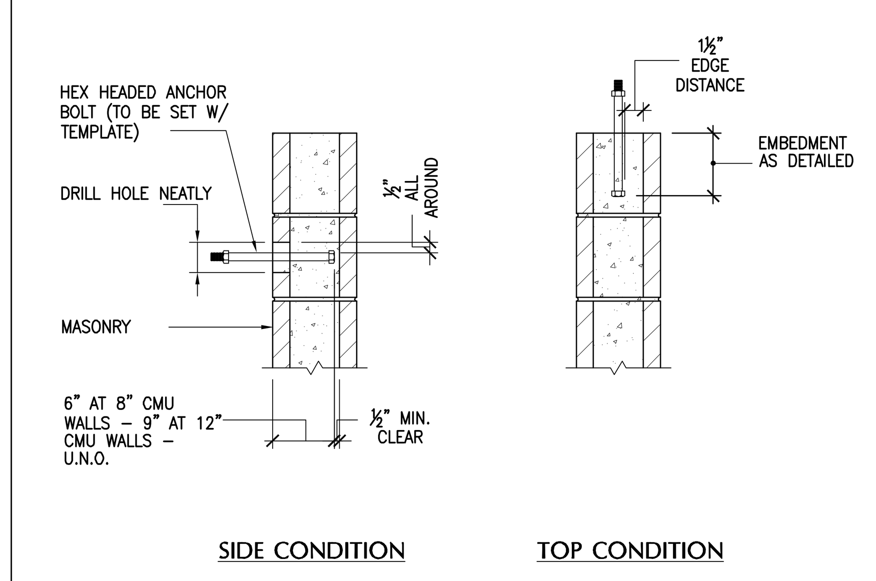

TYP. ANCHOR BOLT PENETRATIONS IN CMU WALLS — 9

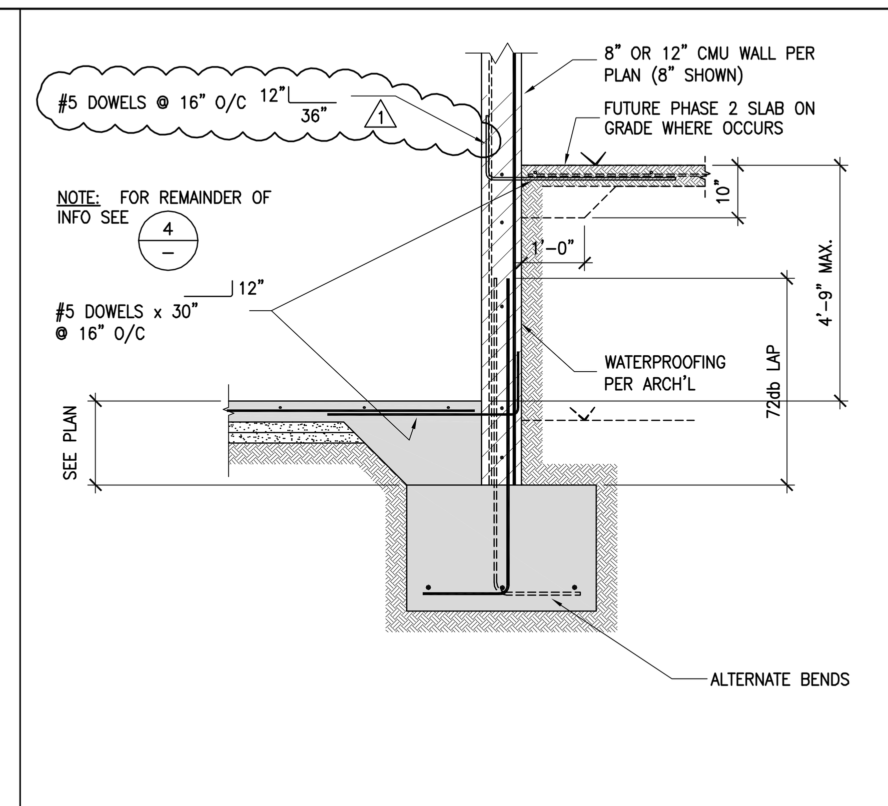

TYPICAL PERIMETER MASONRY WALL AT CONTINUOUS FOOTING — 5

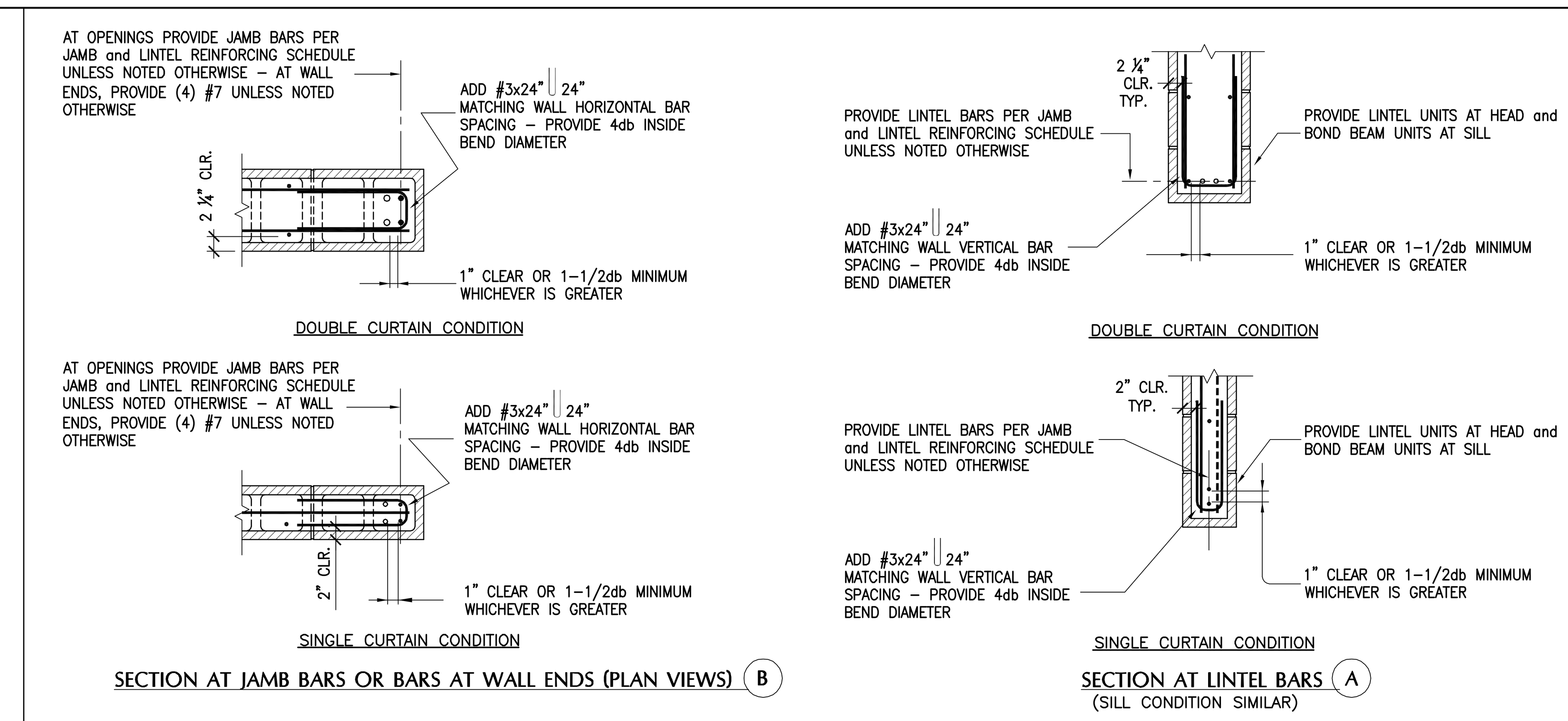

TYPICAL MASONRY CONSTRUCTION AT OPENINGS and WALL ENDS — 3

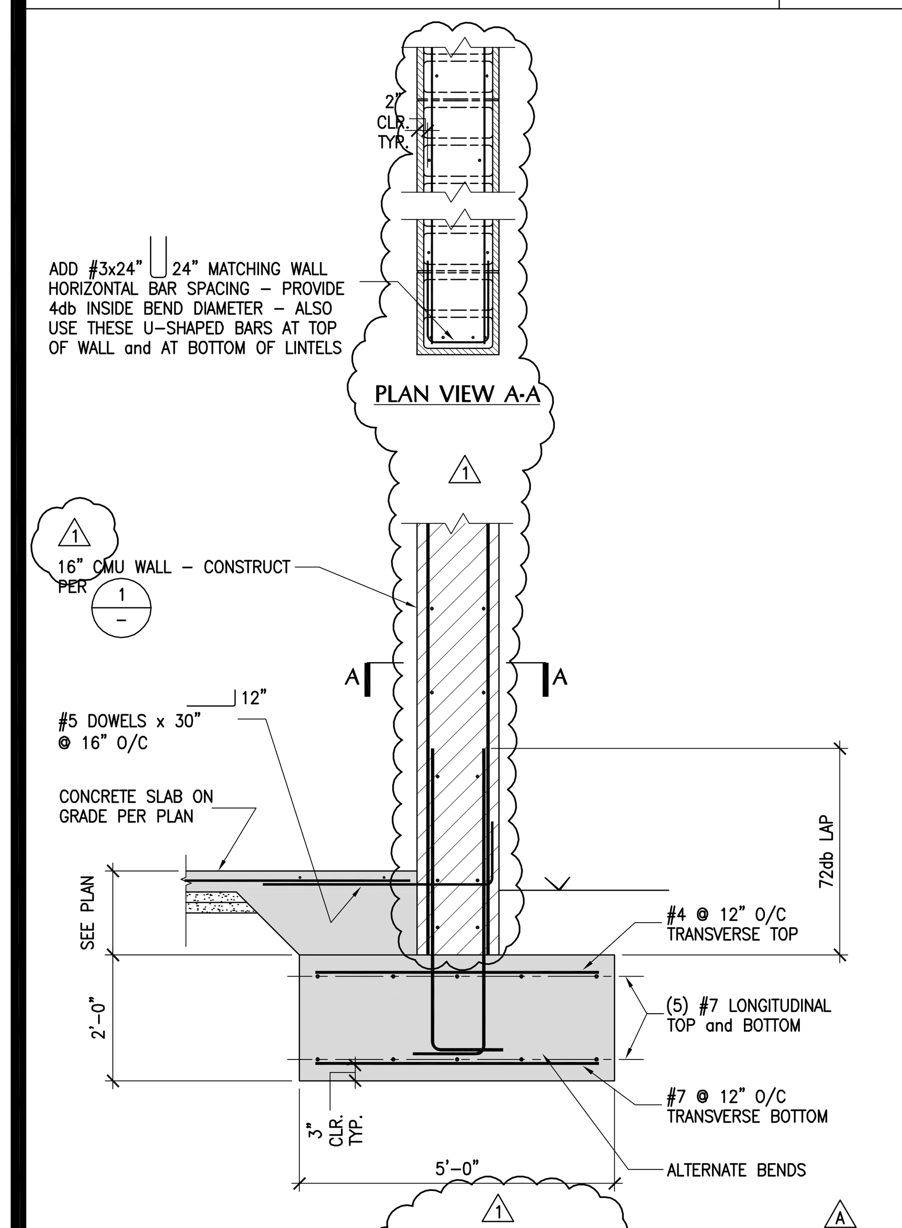

TYPICAL PERIMETER 16" CMU WALL AT CONTINUOUS FOOTING — 11

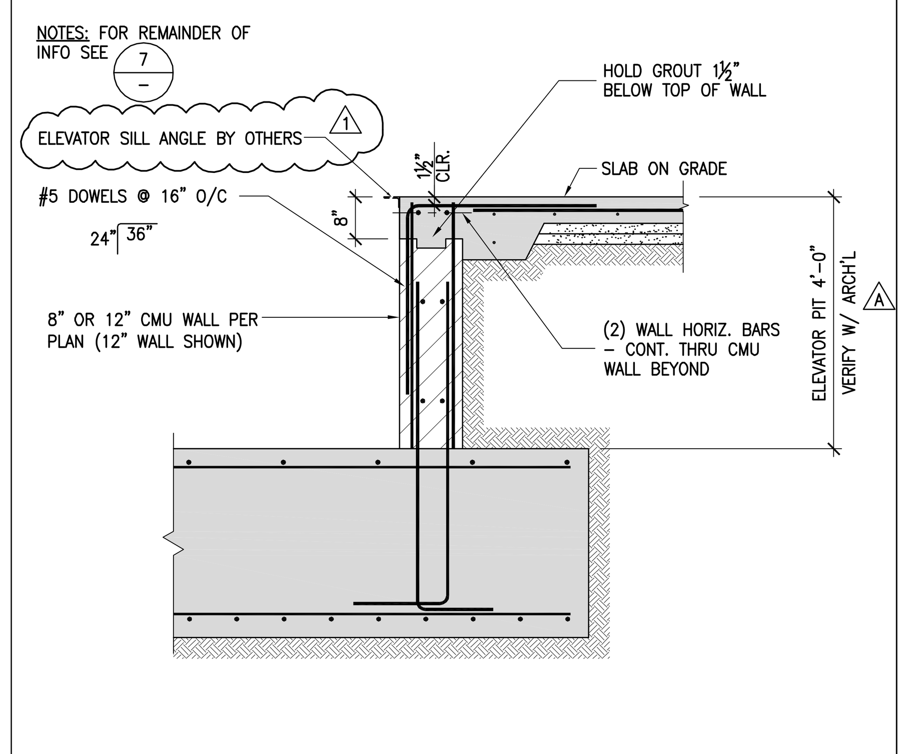

TYPICAL MASONRY WALL AT ELEVATOR DOOR — 8

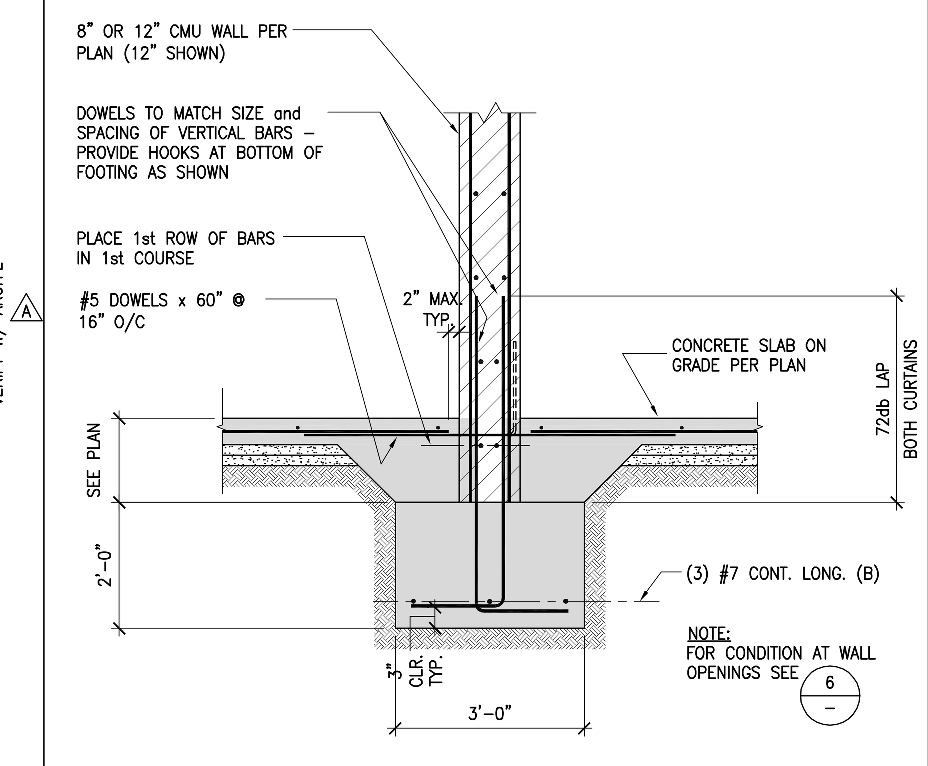

TYPICAL INTERIOR MASONRY WALL AT CONTINUOUS FOOTING — 4

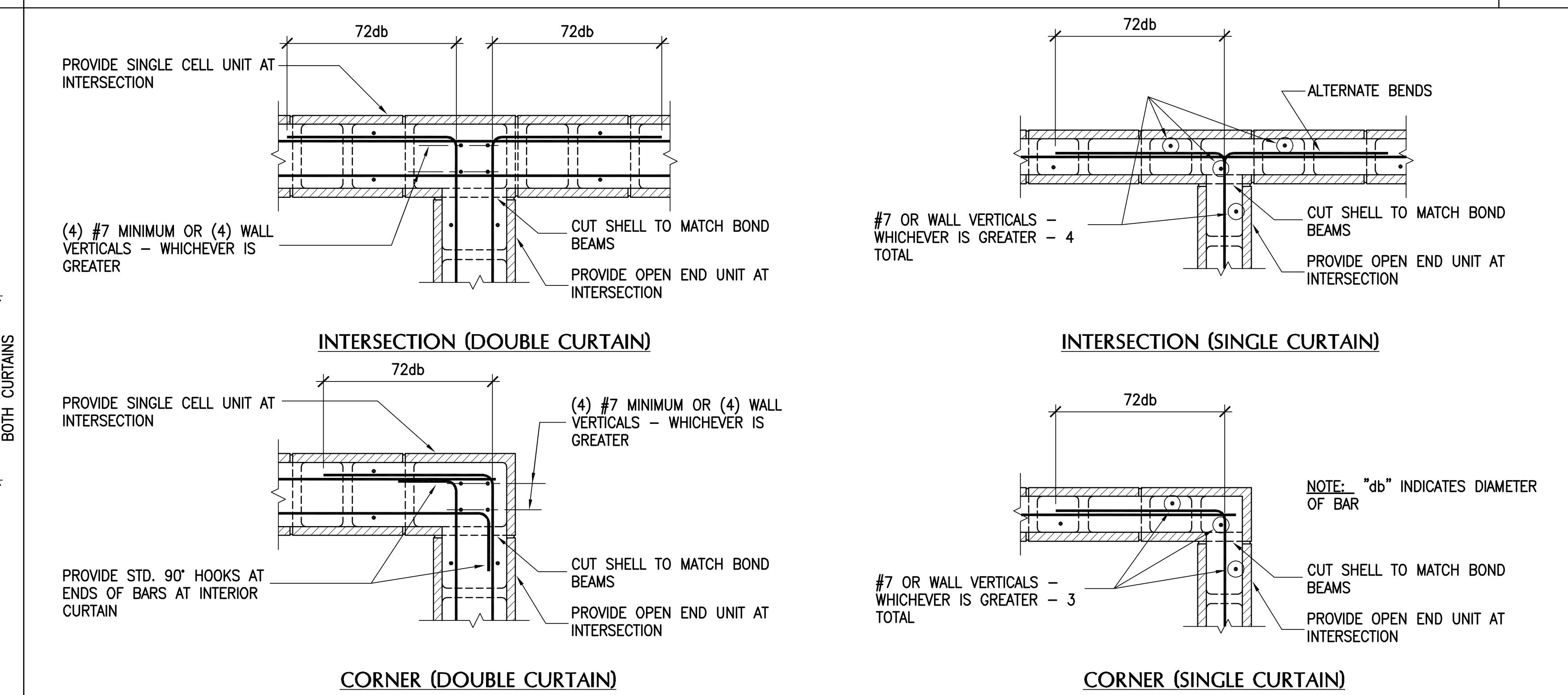

TYPICAL MASONRY CONSTRUCTION AT CORNERS and INTERSECTIONS (PLAN VIEW) — 2

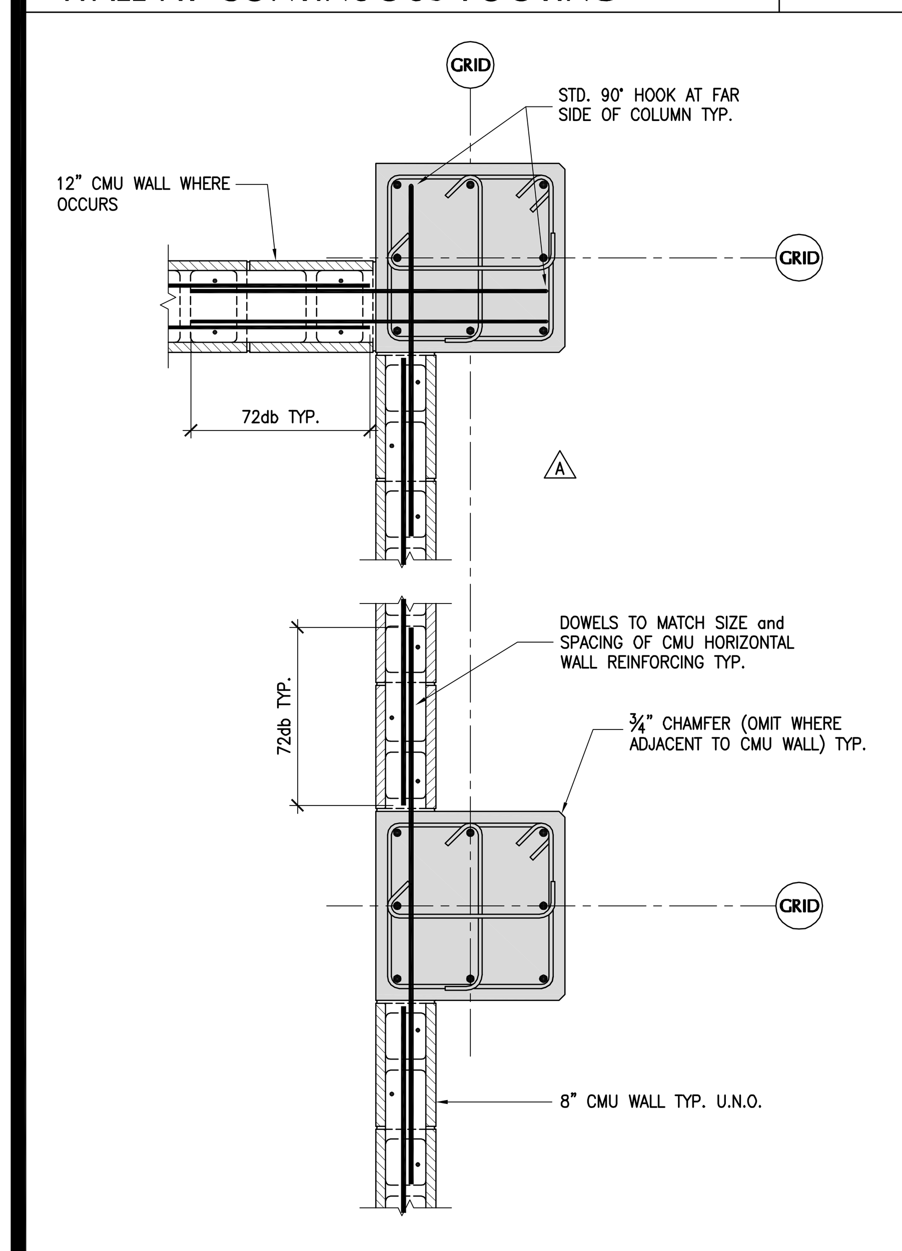

PLAN AT CMU WALL INTERRUPTED AT 24"x24" C.I.P. CONC. COLUMN (PLAN VIEW) — 10

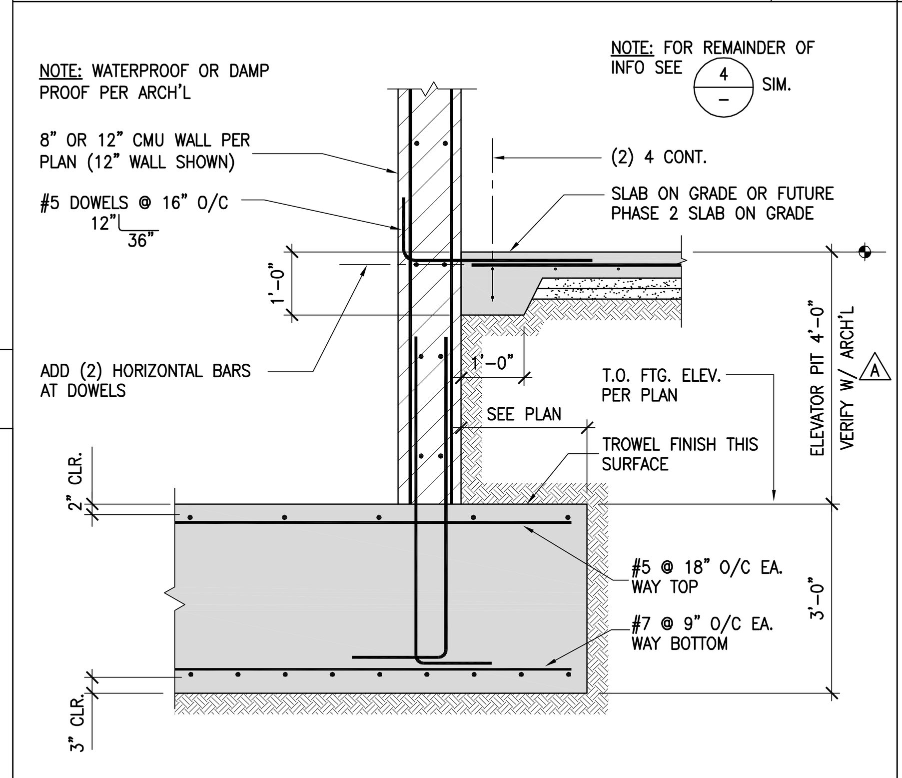

TYPICAL MASONRY WALL ADJ. TO ELEVATOR PIT — 7

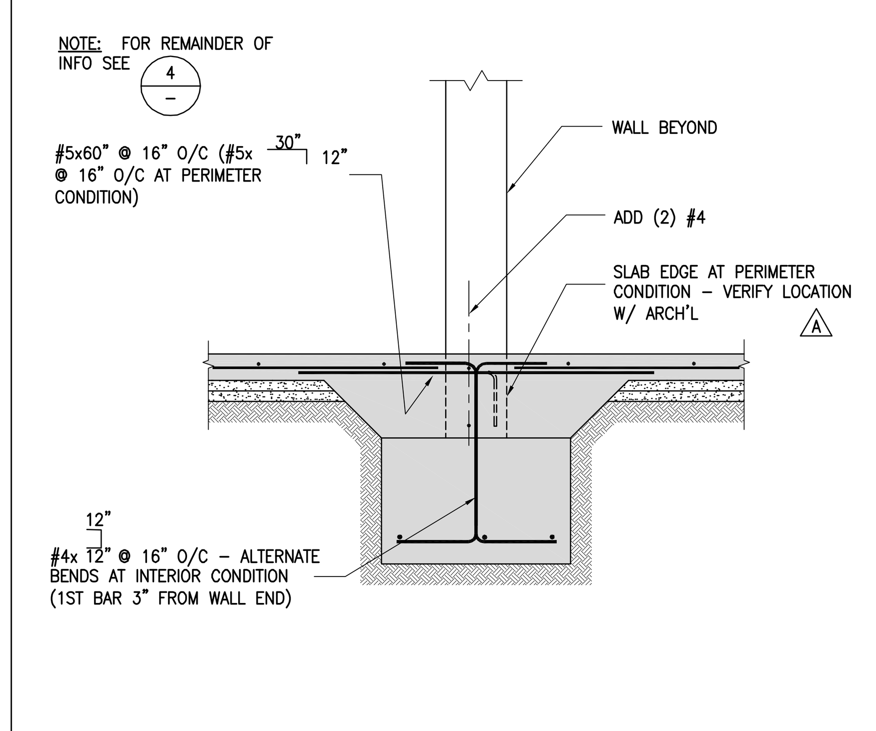

TYPICAL OPENING IN MASONRY WALL AT CONTINUOUS FOOTING — 6

KEY NOTES:

1. PROVIDE DOWELS AT BOTTOM OF WALL MATCHING SIZE and QUANTITY OF VERTICAL OR JAMB BARS INTO FOUNDATION W/ STD. 90° HOOKS AT BOTTOM OF FOOTING – LAP W/ VERTICAL OR JAMB BARS 72 BAR DIAMETERS (db)
2. TYPICAL HORIZONTAL WALL BARS PER WALL REINFORCING SCHEDULE UNLESS OTHERWISE INDICATED ON PLANS OR ELEVATIONS – PROVIDE STD. 90° HOOKS AT WALL ENDS and OPENINGS – LAP HORIZONTAL BARS 72 db AT WELL STAGGERED LOCATIONS – NO ATTEMPT IS MADE TO LOCATE HORIZONTAL BAR SPLICE LOCATIONS
3. TYPICAL VERTICAL WALL BARS PER WALL REINFORCING SCHEDULE UNLESS OTHERWISE INDICATED ON PLANS OR ELEVATIONS – LAP VERTICAL BARS AT ELEVATED LEVELS AS SHOWN 72 db – ADD DOWELS AT CONCRETE SLAB ON GRADE and ELEVATED CONCRETE LEVELS PER DETAILS INDICATED
4. TYPICAL JAMB BARS – SEE JAMB and LINTEL REINFORCING SCHEDULE UNLESS SPECIFIC BOUNDARY ELEMENT REINFORCING SHOWN ON PLANS OR ELEVATIONS – EXTEND JAMB BARS 72 db ABOVE and BELOW OPENINGS UNLESS SHOWN OTHERWISE (ADD BARS WITH STD. 90° HOOK AT TOP OF WALL WHERE WALLS TERMINATE ABOVE OPENING) – LAP JAMB BARS AT ELEVATED LEVELS WHERE SHOWN 72 BAR DIAMETERS – FOR TYPICAL SECTION AT JAMB BARS INCLUDING CONFINING TIES SEE 3B/– UNLESS NOTED OTHERWISE
5. TYPICAL LINTEL BARS – SEE JAMB and LINTEL REINFORCING SCHEDULE UNLESS OTHERWISE INDICATED ON PLANS OR ELEVATIONS – SPLICES NOT PERMITTED – EXTEND LINTEL BARS 72 db BEYOND OPENINGS UNLESS SHOWN OTHERWISE (PROVIDE STD. 90° HOOK AT WALL ENDS IF EXTENSION LENGTH BEYOND OPENING CANNOT BE ATTAINED) – FOR TYPICAL SECTION AT LINTEL BARS INCLUDING CONFINING TIES SEE 3A/– UNLESS NOTED OTHERWISE
6. ALIGNING JAMB BARS OKAY WHERE OPENING JAMBS ABOVE and BELOW MISALIGN BY LESS THAN 16"
7. DETERMINE LINTEL BARS BASED ON WIDTH OF LARGER OPENING ABOVE OR BELOW
8. PROVIDE (2) #7 VERTICAL BARS AT WALL ENDS – LAP VERTICAL BARS AT ELEVATED LEVELS AS SHOWN 72 BAR DIAMETERS
9. IF WALL HEIGHT IS NON-MODULAR OR TOP OF WALL SLOPES, EITHER SAW TOP COURSE OR (IF NOT EXPOSED) FORM TOP COURSE and GROUT SOLIDLY
10. EXTEND JAMB BARS DOWN TO TOP OF OPENING and PROVIDE STD. 90° HOOK
11. AT TOP OF WALL, PROVIDE (2) HORIZONTAL WALL BARS W/ STD. 90° HOOKS AT WALL ENDS

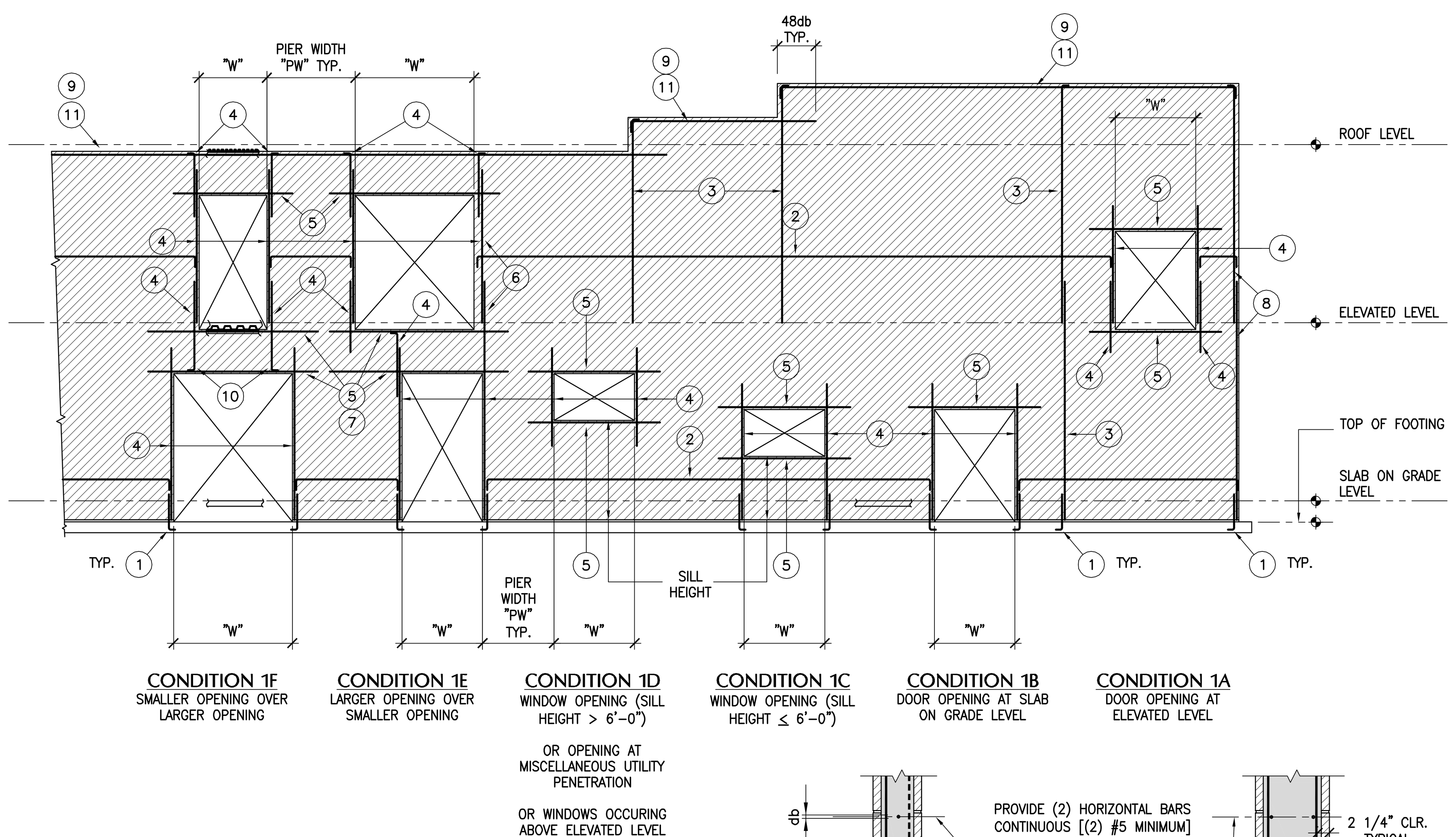

JAMB and LINTEL REINFORCING SCHEDULE
(UNLESS NOTED OTHERWISE ON PLANS OR WALL ELEVATIONS)

MAXIMUM OPENING WIDTH "W"	REINFORCING *	
	JAMB REINFORCING (VERTICAL)	LINTEL REINFORCING (HORIZONTAL)
2'-0"	(2) #5	(2) #5
4'-6"	(2) #7	(2) #6
6'-0"	(2) #7	(2) #7
8'-0"	(2) #7	(2) #7
10'-0"	(4) #7	(2) #7

* NOTE: AT 16" CMU WALL PROVIDE 2x BARS INDICATED IN SCHEDULE

WALL REINFORCING SCHEDULE
(UNLESS NOTED OTHERWISE – SEE PLANS OR WALL ELEVATIONS FOR WALL THICKNESS)

NOMINAL WALL THICKNESS	REINFORCING		REINFORCING PLACEMENT DETAIL
	VERTICAL REINFORCING	HORIZ. REINFORCING	
12"	#5 @ 16" EACH FACE	#4 @ 16" EACH FACE	1Y/–
8"	#5 @ 16"	#5 @ 16"	1Z/–
16"	#5 @ 16" O/C EACH FACE	#5 @ 16" O/C EACH FACE	1Y/–

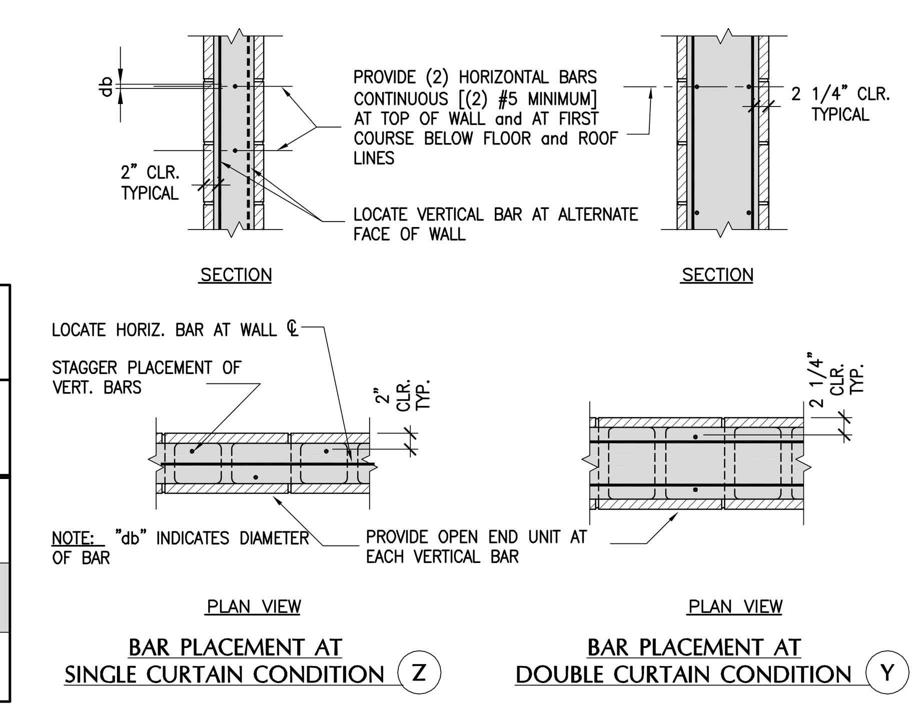

TYPICAL MASONRY WALL ELEVATION and REINFORCING SCHEDULES (APPLICABLE TO ALL MASONRY WALLS EXCEPT SITE RETAINING WALLS UNLESS NOTED OTHERWISE) — NO SCALE TYPICAL U.N.O. — 1

BAYLEY CONSTRUCTION
Bayley Construction
3730 S. Susan St.
Suite 200
Santa Ana, CA. 92704
CA. License 734880
Tel 714-540-8863
Fax 714-556-8863

Bayley Construction
8005 S.E. 28th St.
P.O. Box 9004
Mercer Island, WA. 98040
WA. License
BAYLEC034JC
Tel 206-621-8884
Fax 206-343-7728

Pacific Parking DESIGN
6 Venture, Suite 275 949.341.0066 t
Irvine, California 92618 949.341.0099 f

DLR Group WWCOT
Architecture Engineering Planning Interiors
4280 Latham Street, Suite H
Riverside, California 92501
T 951.682.0470
F 951.682.1801
wwcot.com
dlrgroup.com
Santa Monica
Sacramento
Riverside
Palm Springs
Modesto
Shanghai, China

Copyright © 2010, DLR Group Inc. of California
DBA DLR Group WWCOT, All Rights Reserved

REGISTERED PROFESSIONAL ENGINEER SUZANNE DOW NAKAKI SE 3119 EXP. 12/31/11 STRUCTURAL STATE OF CALIFORNIA

Public Agency Submittal:
Issued for Bidding:
Issued for Construction:

Revisions:

A	04-08-2011	City Comments
C	05-12-2011	Bldg. Dept. Re-Submittal
1	09-19-2011	Bulletin 1

Phase I
FOX ENTERTAINMENT PLAZA
3605 Market Street
Riverside, CA 92501

City of Riverside
CITY OF RIVERSIDE
3900 Main Street, Riverside, CA 92522

Phase: CD
Revised : 2-10-11
DLR Group Project No.75-10603-00

Typical CMU Wall Details

Issued Date: Feb. 10, 2011
Drawn By: JT/MT/CG
Checked By: SDN

A-S021
Sheet №

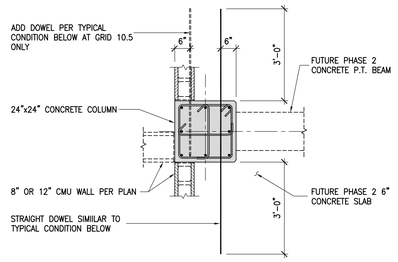

PLAN VIEW AT ADDED DOWELS AT 24"x24" COLUMNS

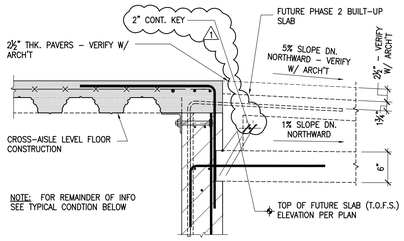

CONDITION ALONG GRID D' at ENTRY

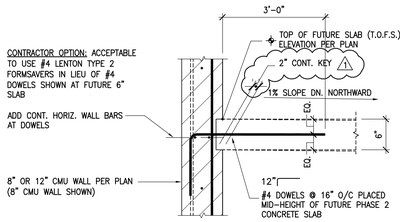

TYPICAL CONDITION

TYP. DOWELS FOR PHASE 2 SECOND LEVEL ELEVATED CONC. SLAB — 13

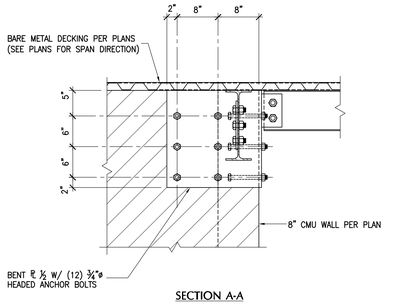

SECTION A-A

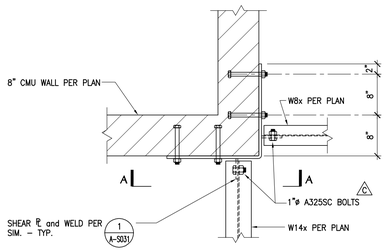

PLAN VIEW

NOTE: FOR REMAINDER OF INFO SEE 4

BEAM CONNECTION TO CMU WALL — 10

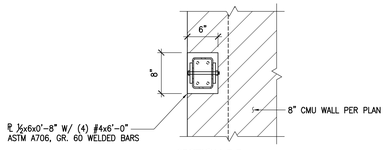

SECTION B-B

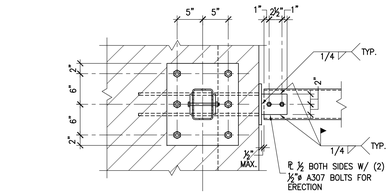

SECTION A-A

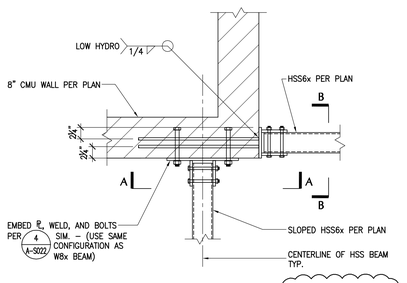

PLAN VIEW

NOTE: FOR REMAINDER OF INFO SEE 4

BEAM CONNECTION TO CMU WALL — 9

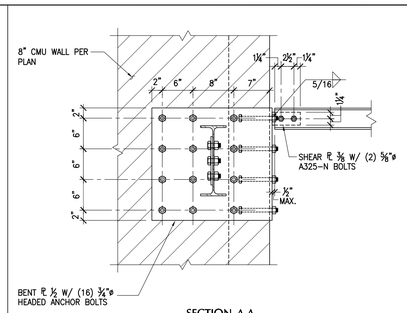

SECTION A-A

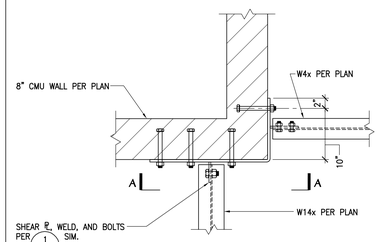

PLAN VIEW

NOTE: FOR REMAINDER OF INFO SEE 4

BEAM CONNECTION TO CMU WALL — 8

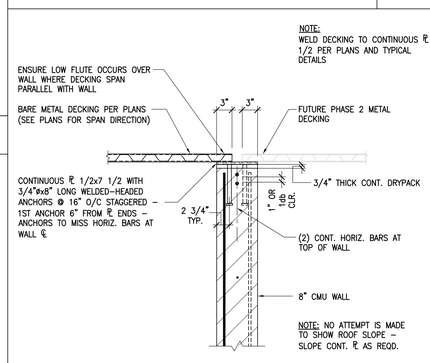

TYP. BARE METAL DECKING at INTERIOR CMU WALL (DISCONTINUOUS) — 7

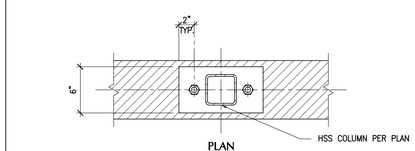

PLAN

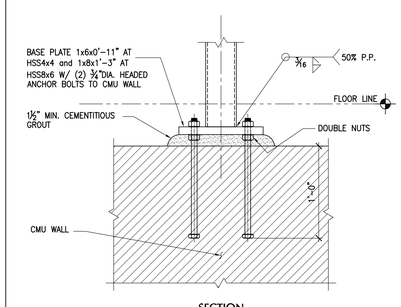

SECTION

TYPICAL HSS TO CMU WALL DETAIL — 6

ADDED BOLT SCHEDULE		
BEAM SIZE	ANCHOR BOLTS	
	ROWS	NO. OF BOLTS PER ROW
W8x, W10x, W12x	2	2
W14x	4	2

NOTE: ANCHOR BOLTS TO BE 3/4"ø A307 HEADED BOLTS.

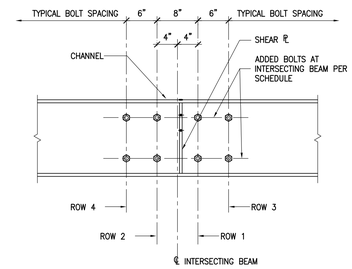

ELEVATION AT CHANNEL

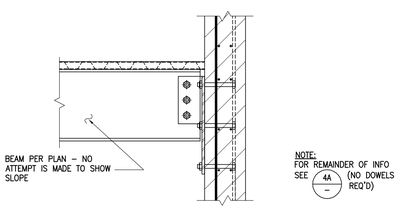

CONDITION AT BARE METAL DECKING (B)

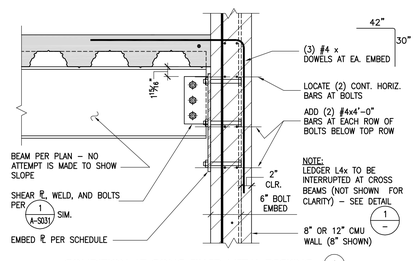

CONDITION AT CONC. FILLED METAL DECKING (A)

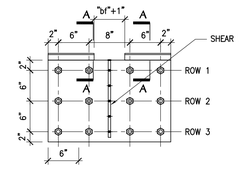

TYP. EMBED PLATE ELEV.

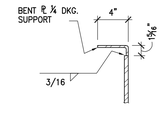

SECTION A-A

EMBED PLATE SCHED.				
BEAM SIZE	℞ SIZE	ANCHOR BOLTS		
	THK.	ROWS	NO. OF BOLTS PER ROW	
W8x, W10x	1/2	3	2	
MC 12x, W12x, and C12x	1/2	3	2	
W14x	3/4	4	4	
W16x	3/4	4	4	
MC18x	1/2	4	2	

NOTE: ANCHOR BOLTS TO BE 3/4"ø A307 HEADED BOLTS.

TYPICAL BEAM CONNECTION to CMU WALL — 4

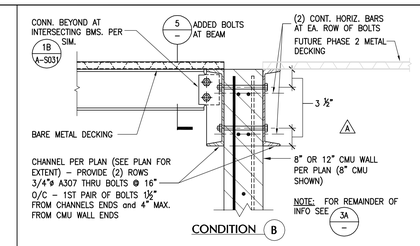

CONDITION (B)

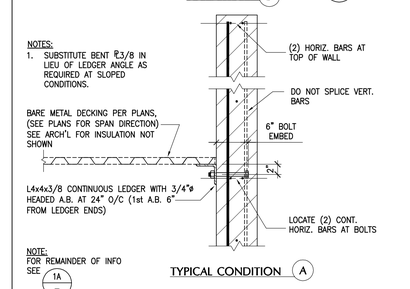

TYPICAL CONDITION (A)

PERIMETER CMU WALL at BARE METAL DECKING — 3

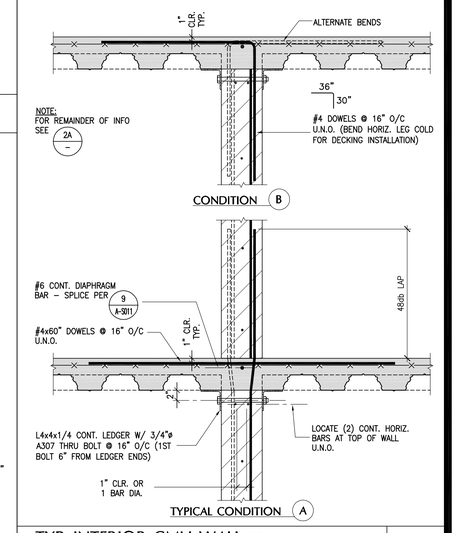

CONDITION (B)

TYPICAL CONDITION (A)

TYP. INTERIOR CMU WALL at CONCRETE FILLED METAL DECKING — 2

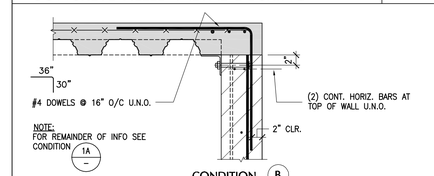

CONDITION (B)

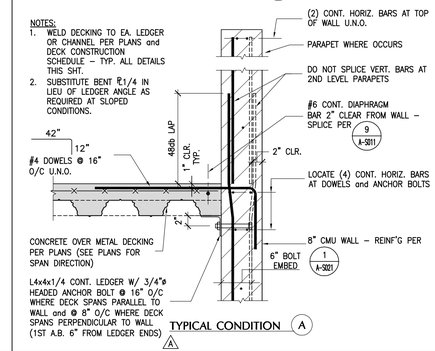

TYPICAL CONDITION (A)

TYP. PERIMETER CMU WALL at CONC. FILLED METAL DECKING — NO SCALE TYPICAL U.N.O. — 1

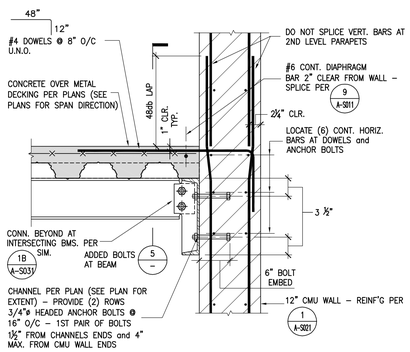

TYP. 8" CMU WALL TO UNDERSIDE AT CONCRETE FILLED DECKING AT BALCONY — 12

TYP. PERIMETER 12" CMU WALL at CONCRETE FILLED DECKING — 11

Bayley Construction
3730 S. Susan St.
Suite 200
Santa Ana, CA. 92704
CA. License 734880
Tel 714-540-8863
Fax 714-556-8863

Bayley Construction
8005 S.E. 28th St.
P.O. Box 9004
Mercer Island, WA. 98040
WA. License
BAYLEC034JC
Tel 206-621-8884
Fax 206-343-7728

Pacific Parking DESIGN
6 Venture, Suite 275 949.341.0066 t
Irvine, California 92618 949.341.0099 f

DLR Group WWCOT
Architecture Engineering Planning Interiors
4280 Latham Street, Suite H
Riverside, California 92501
T 951.682.0470
F 951.682.1801
wwcot.com
dlrgroup.com

Santa Monica
Sacramento
Riverside
Palm Springs
Modesto
Shanghai, China

Copyright © 2010, DLR Group Inc. of California DBA DLR Group WWCOT, All Rights Reserved

REGISTERED PROFESSIONAL ENGINEER SUJANEE DOW SE 31119 EXP. 12/31/11 STRUCTURAL STATE OF CALIFORNIA

Public Agency Submittal:
Issued for Bidding:
Issued for Construction:

Revisions:

#		
A	04-08-2011	City Comments
C	05-12-2011	Bldg. Dept. Re-Submittal
1	09-19-2011	Bulletin 1

Phase I
FOX ENTERTAINMENT PLAZA
3605 Market Street
Riverside, CA 92501

City of Riverside
3900 Main Street, Riverside, CA 92522

Phase: CD
Revised : 2-10-11
DLR Group Project No. 75-10603-00

Typical CMU Wall Details

Issued Date: Feb. 10, 2011
Drawn By: JT/MT/CG
Checked By: SDN

A-S022
Sheet №

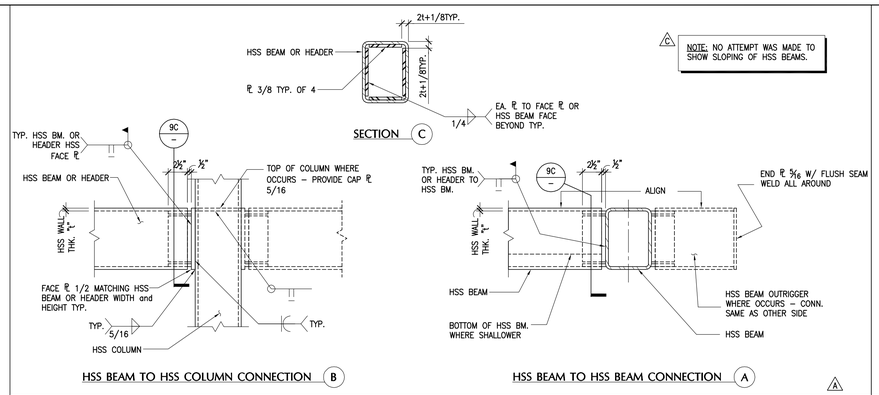

TYPICAL HSS BEAM TO HSS BEAM and HSS COLUMN CONNECTIONS | 9

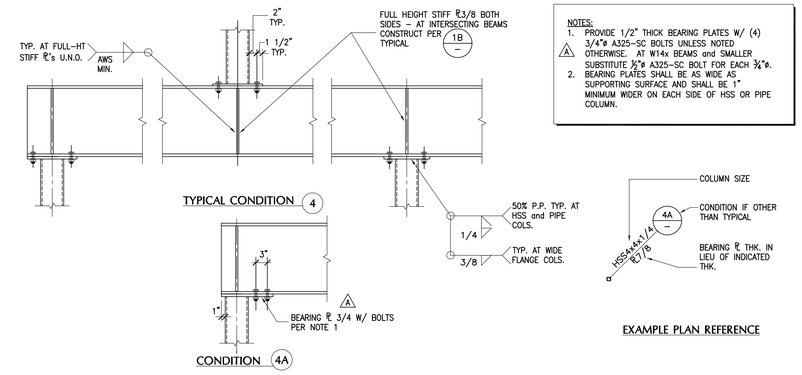

TYPICAL BEAM TO HSS OR PIPE COLUMN CONNECTIONS | 4

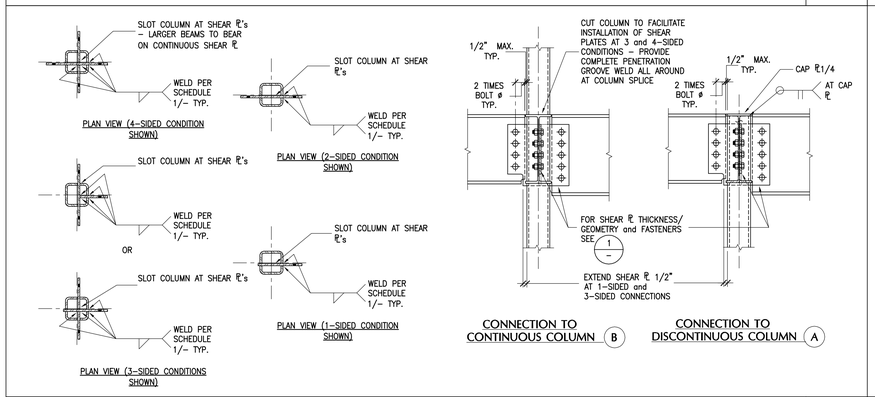

TYPICAL BEAM TO HSS OR PIPE COLUMN CONNECTIONS | 8

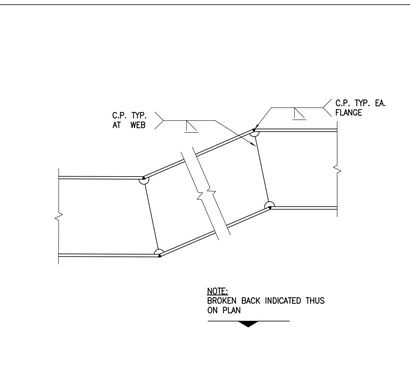

TYP. BROKEN BACK BEAM DETAIL | 5

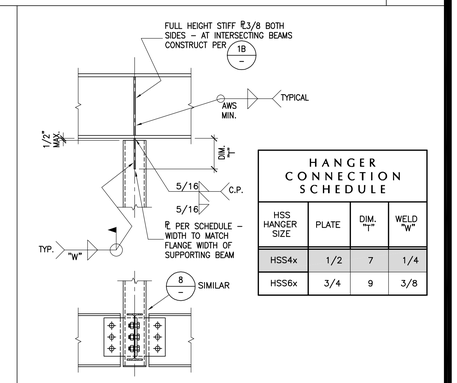

HANGER CONNECTION SCHEDULE

HSS HANGER SIZE	PLATE	DIM. "T"	WELD "W"
HSS4x	1/2	7	1/4
HSS6x	3/4	9	3/8

TYPICAL HSS HANGER DETAIL | 3

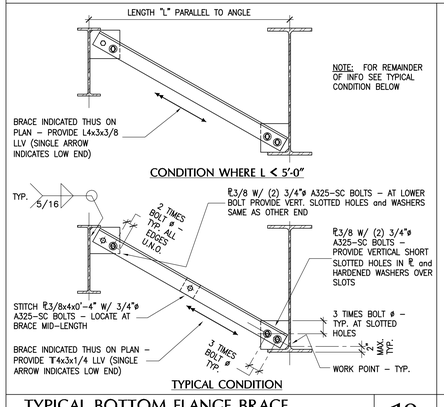

TYPICAL BOTTOM FLANGE BRACE (BRACE PERP. TO BOTH BEAMS) | 10

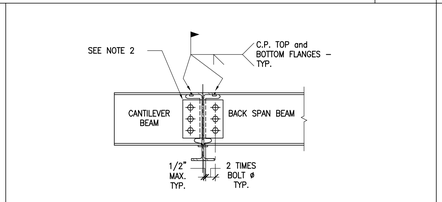

NOTES:
1. PROVIDE THESE NON-FRAME MOMENT CONNECTIONS WHERE DENOTED ON PLAN THUS
2. SEE DETAIL 1/– FOR SHEAR PLATE THICKNESS/ GEOMETRY, SHEAR PLATE WELDING and QUANTITY OF FASTENERS EXCEPT USE 1"ø A490-SC BOLTS IN LIEU OF BEARING TYPE BOLTS

TYPICAL BEAM TO GIRDER NON-FRAME MOMENT CONNECTION | 7

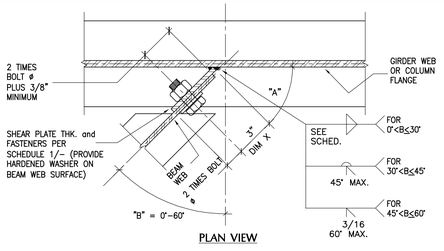

NOTES:
1. AT GROOVE WELDS, BEVEL END OF SHEAR PLATE TO MAINTAIN ANGLE "A" AT 45°. DO NOT INCREASE DIMENSION "X" WITHOUT WRITTEN ACCEPTANCE FROM ARCHITECT (STRUCTURAL ENGINEER).
2. PROVIDE AISC DEFINED HORIZONTAL SHORT SLOTTED HOLES IN BEAM WEB AT
3. CONNECTIONS TO COLUMNS.

SKEWED BEAM CONNECTION SCHEDULE

BEAM SIZE	SHEAR ℄ WELDS: WELD 0' < B ≤ 10'	WELD 10' < B ≤ 30'	WELD "S"
W6x,C6x	S S+1/16	S S+1/8	5/16
W8x, W10x C8x, C10x			5/16
W12x, C12x, MC12x, W14x			5/16
W16x, W18x			5/16
W21x			3/8
W24x		45°	3/8

TYPICAL SKEWED BEAM to SUPPORT CONNECTIONS | 2

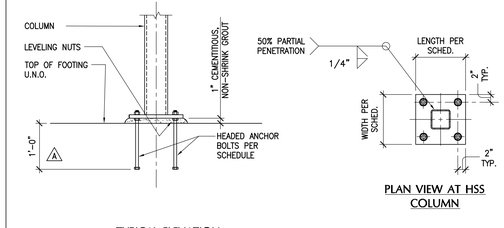

BASE PLATE SCHEDULE

COLUMN SIZE	BASE PLATE: THK.	WIDTH	LENGTH	ANCHOR BOLTS
HSS5x5x1/4	1"	15"	15"	(4) 1"ø
HSS8x6x3/8	1"	16"	18"	(4) 1"ø

TYPICAL HSS COLUMN BASE PLATE DETAIL | 6

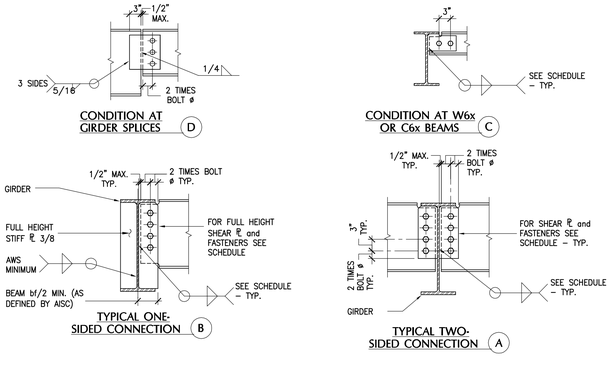

CONNECTION SCHEDULE

BEAM SIZE	A325-N H.S.B.	SHEAR PLATE THK.	WELD (BOTH SIDES)
W6x,C6x	(2) 7/8"ø	3/8	5/16
W8x, W10x C8x, C10x	(2) 7/8"ø	3/8	5/16
W12x, C12x, MC12x, W14x	(3) 7/8"ø	3/8	5/16
W16x, W18x	(4) 7/8"ø	3/8	5/16
W21x	(5) 7/8"ø	1/2	3/8
W24x	(6) 7/8"ø	1/2	3/8
W27x	(7) 7/8"ø	1/2	3/8
W30x	(8) 7/8"ø	1/2	3/8
W33x	(9) 1"ø	1/2	3/8
W36x	(9) 1"ø	1/2	3/8

TYP. BEAM TO GIRDER CONNECTIONS | NO SCALE TYPICAL U.N.O. | 1

Bayley Construction
3730 S. Susan St.
Suite 200
Santa Ana, CA. 92704
CA. License 734880
Tel 714-540-8863
Fax 714-556-8863

Bayley Construction
8005 S.E. 28th St.
P.O. Box 9004
Mercer Island, WA. 98040
WA. License
BAYLEC034JC
Tel 206-621-8884
Fax 206-343-7728

Pacific Parking DESIGN
6 Venture, Suite 275 949.341.0066 t
Irvine, California 92618 949.341.0099 f

DLR Group WWCOT
Architecture Engineering Planning Interiors
4280 Latham Street, Suite H
Riverside, California 92501
T 951.682.0470
F 951.682.1801
wwcot.com
dlrgroup.com
Santa Monica
Sacramento
Riverside
Palm Springs
Modesto
Shanghai, China

Copyright © 2010, DLR Group Inc. of California DBA DLR Group WWCOT, All Rights Reserved

Public Agency Submittal:
Issued for Bidding:
Issued for Construction:

Revisions:

#		
A	04-08-2011	City Comments
C	05-12-2011	Bldg. Dept. Re-Submittal
1	09-19-2011	Bulletin 1

Phase I
FOX ENTERTAINMENT PLAZA
3605 Market Street
Riverside, CA 92501

City of Riverside
3900 Main Street, Riverside, CA 92522

Phase: CD
Revised : 2-10-11
DLR Group Project No. 75-10603-00

Typical Structural Steel Details

Issued Date: Feb. 10, 2011
Drawn By: JT/MT/CG
Checked By: SDN

A-S031
Sheet №

TYPICAL OPENINGS IN FLOOR and ROOF DECKS UP TO 4'-0" WIDE — 5

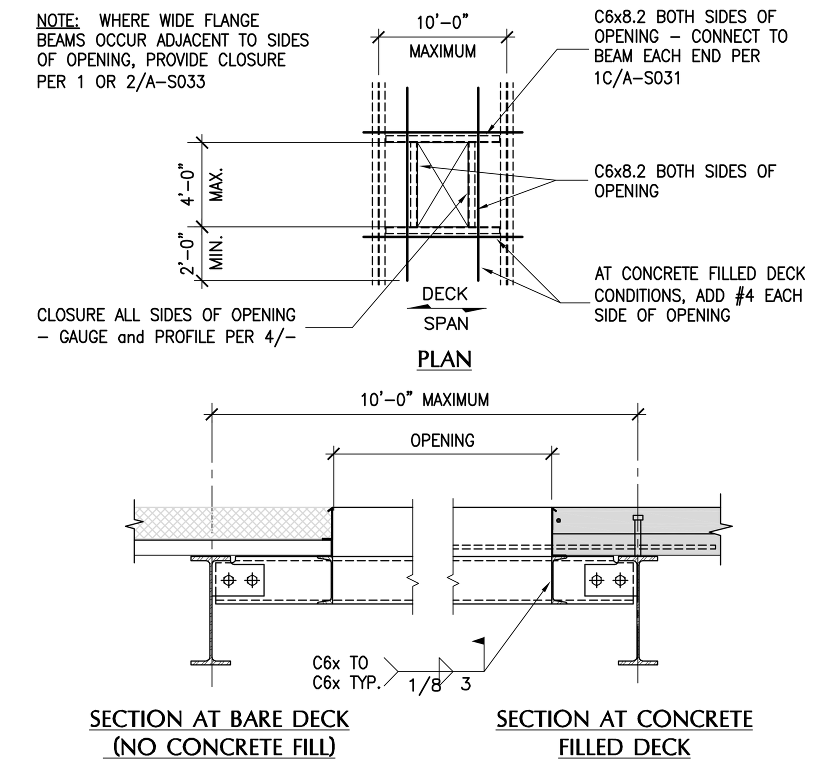

TYPICAL SHEARTRANZ II DETAIL — 3

NOTES:

1. PROVIDE SHEARTRANZ II ON BEAMS RUNNING PERPENDICULAR TO DECK SPANS.
2. PROVIDE SHEARTRANZ II AS MANUFACTURED BY VERCO MANUFACTURING CO. IN COMPLIANCE WITH ICC-ES EVALUATION REPORT #2078 and MANUFACTURER'S WRITTEN INSTRUCTIONS.

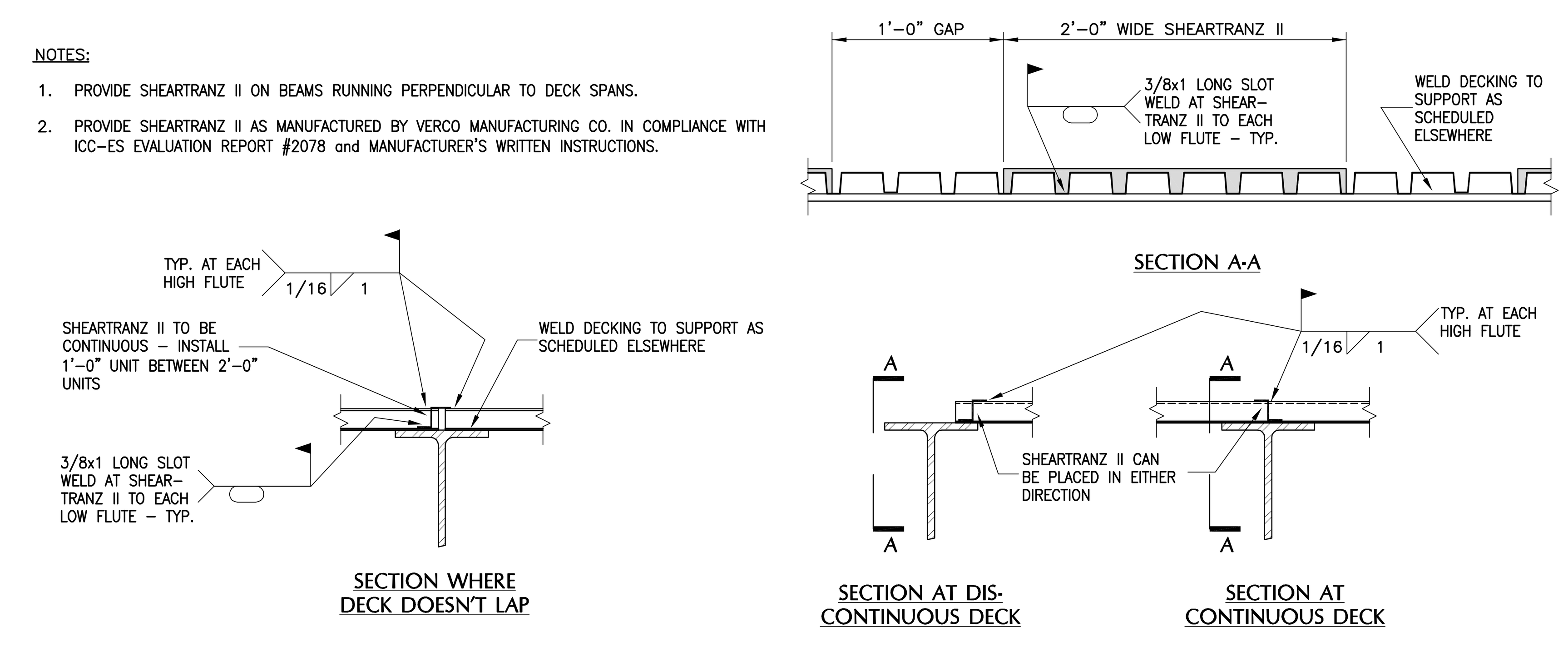

TYPICAL OPENINGS IN FLOOR and ROOF DECKS UP TO 2'-0" SQUARE — 4

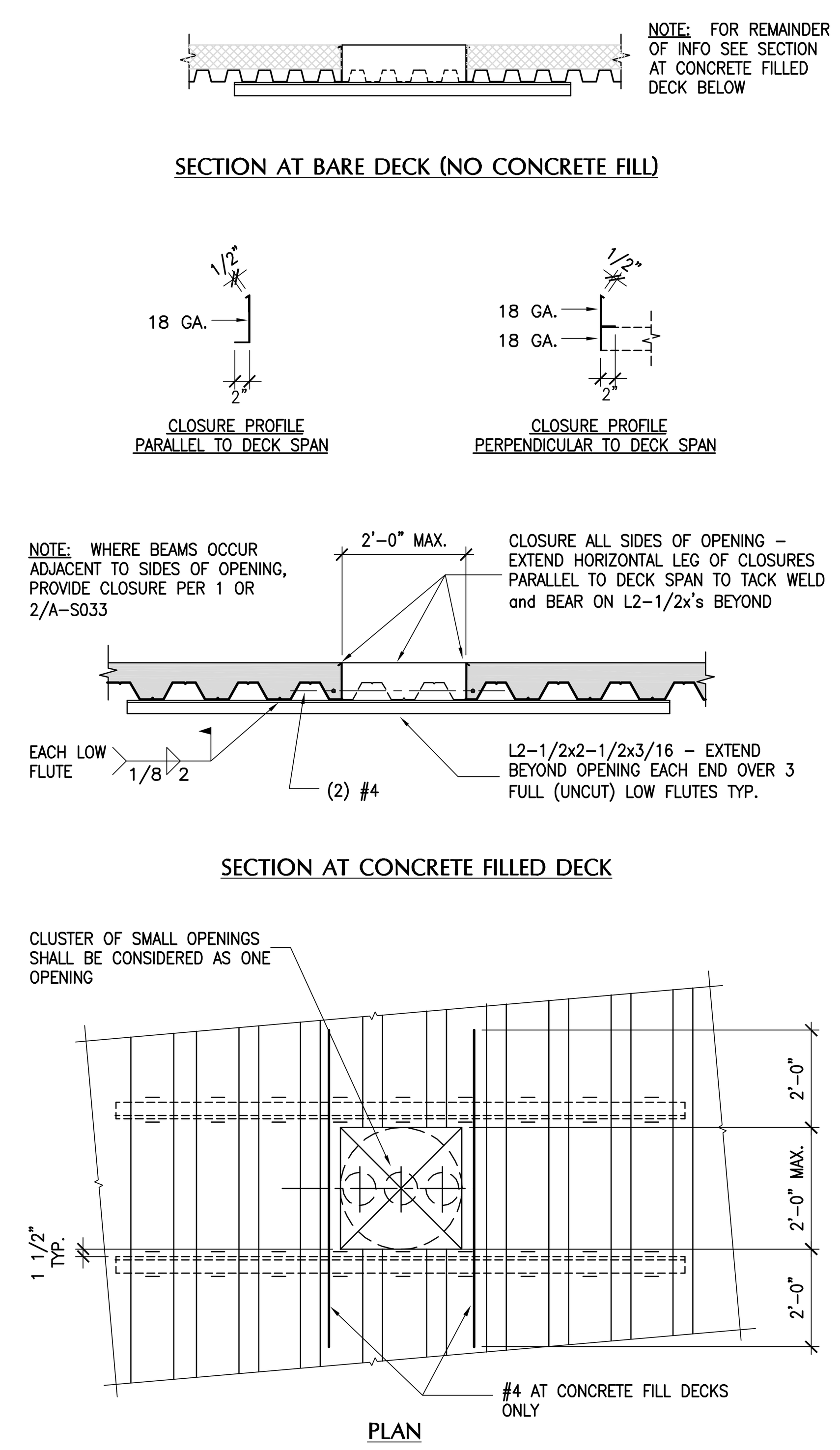

TYPICAL WELDED SHEAR STUD DETAILS — 2

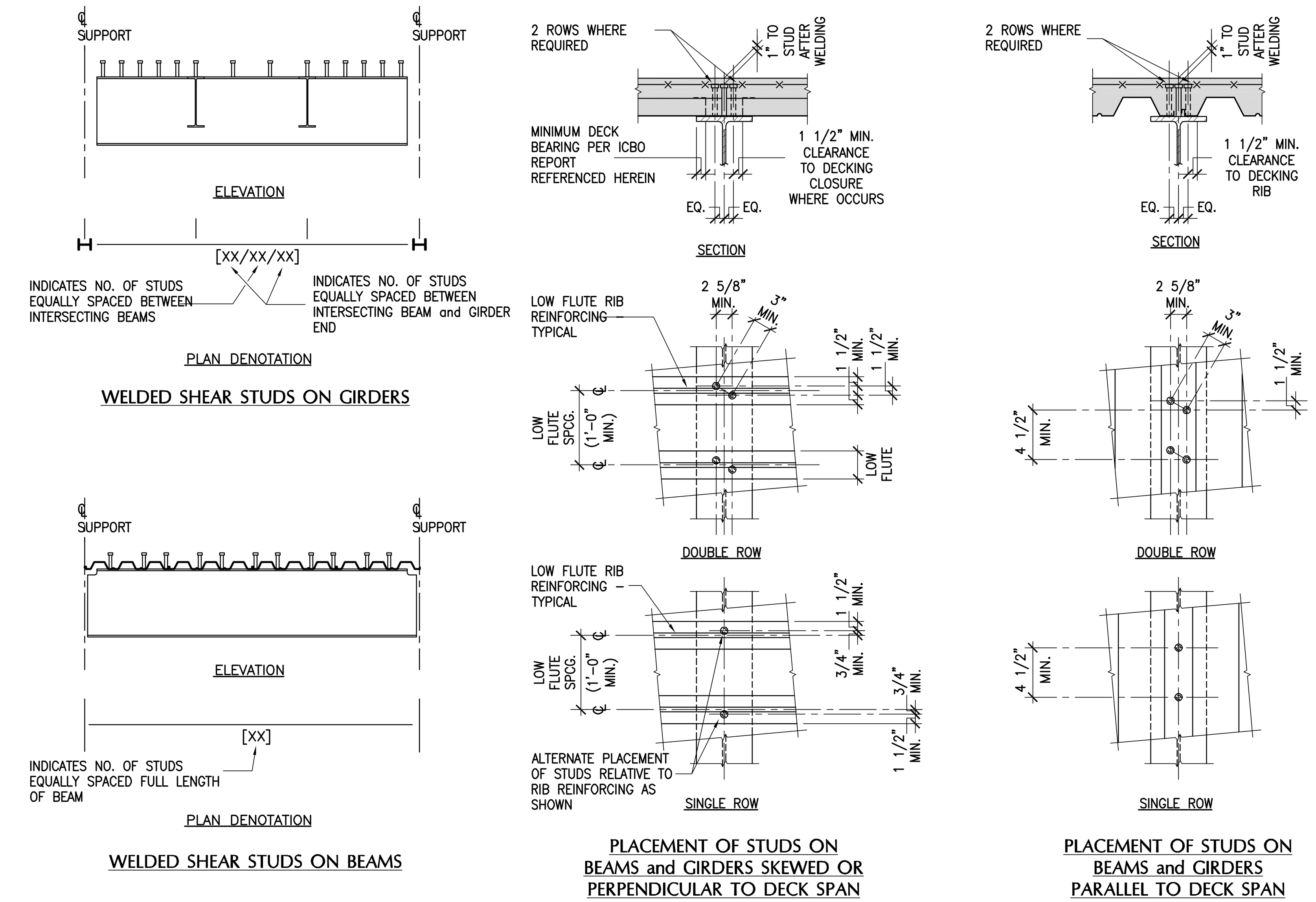

NOTES:

1. WHERE CONCRETE FILLED DECK OCCURS OVER STEEL FRAMING, PROVIDE 3/4" DIAMETER WELDED SHEAR STUDS ON ALL BEAMS and GIRDERS. SEE GENERAL NOTES FOR WELDED SHEAR STUD INFORMATION. STUD LENGTH INDICATED IS LENGTH REQUIRED AFTER INSTALLATION.
2. SEE PLANS FOR QUANTITY OF STUDS TO BE PLACED ON EACH BEAM and GIRDER. IF NO QUANTITY OF STUDS INDICATED ON PLANS, PROVIDE (2) STUDS EVERY 12" O/C.
3. WHERE BEAMS and GIRDERS RUN PARALLEL TO DECK SPAN DIRECTION, PLACE STUDS IN SINGLE ROW AT ℄ OF MEMBER AT EQUAL INCREMENTS AS DETAILED. LIMIT SPACING OF STUDS IN DIRECTION PARALLEL TO BEAM OR GIRDER TO 4-1/2" O/C. PROVIDE 2 ROWS OF STUDS WHERE NECESSARY. WHERE 1 1/2" CLEAR DISTANCE CANNOT BE MAINTAINED BETWEEN STUD ℄ and RIB OF DECKING, SPLIT DECKING SHEETS TO ACHIEVE MINIMUM CLEARANCES.
4. WHERE BEAM and GIRDERS RUN PERPENDICULAR OR SKEWED TO DECK SPAN DIRECTION, PLACE STUDS IN SINGLE ROW AT ℄ OF MEMBER AT APPROXIMATE EQUAL INCREMENTS AS DETAILED. LOCATE STUDS AT DECKING LOW FLUTES. LIMIT SPACING OF STUDS IN DIRECTION PARALLEL TO BEAM OR GIRDER TO LOW FLUTE SPACING BUT NEVER LESS THAN 4-1/2" O/C. PROVIDE 2 ROWS OF STUDS WHERE NECESSARY. WHEN UNBALANCED QUANTITIES OF STUDS ARE REQUIRED RELATIVE TO NUMBER OF LOW FLUTES, ADDED STUDS SHALL BE PLACED AT FLUTES NEAREST MIDSPAN and WORKING OUTWARD BOTH DIRECTIONS.
5. METAL DECKING ARC SPOT (PUDDLE) WELDS MAY BE OMITTED WHERE WELDED SHEAR STUDS OCCUR ON A ONE FOR ONE BASIS.

TYPICAL METAL DECKING WELDS TO BEAMS WHERE DECK SPAN PARALLEL TO BEAM — 6

NOTE: LOCATE LOW FLUTE OF DECKING CENTERED ON BEAM (AS SHOWN) - IF LOW FLUTE MISALIGNS W/ BEAM, PROVIDE DETAILS ON SHOP DWGS. SHOWING HOW PUDDLE WELDS TO BEAM WILL BE ACHIEVED

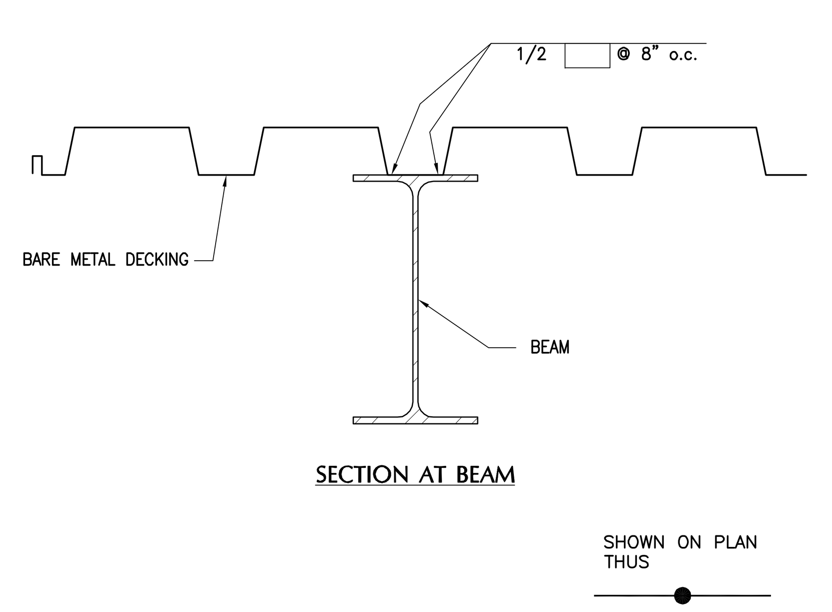

TYPICAL FLOOR and ROOF CONSTRUCTION SCHEDULE and DETAILS — 1

FLOOR and ROOF CONSTRUCTION SCHEDULE

MARK	METAL DECKING	TOTAL SLAB "T"	SLAB DESCRIPTION	WELDED SHEAR STUDS REQUIRED? IF YES, SEE DETAIL 2/–	SHEARTRANZ II REQUIRED? IF YES, SEE DETAIL 3/–	METAL DECKING WELDING OR FASTENING: ARC SPOT (PUDDLE) WELDS U.N.O. – SEE NOTE 3: PERPENDICULAR TO SUPPORTS	PARALLEL TO SUPPORTS	SEAMS	DECKING SECTION PROPERTIES: MOMENT OF INERTIA "I" (IN.⁴/FT.)	SECTION MODULUS "S" (IN.³/FT.)
FD1	3" VERCO W3 x 20 GAUGE FORMLOK DECK	5 1/2"	2 1/2" NORMAL WEIGHT CONCRETE W/ 6x6-W3.5xW3.5 W.W.F.	YES	NO	(4) PER 36" SHEET (3 PER 24" SHEET)	SPACE @ 12" O/C	BUTTON PUNCH @ 24" O/C	0.896	0.534
FD1A	3" VERCO W3 x 18 GAUGE FORMLOK DECK	5 1/2" MIN. 7" MAX.	2 1/2" (MIN.), 4" (MAX.) NORMAL WEIGHT CONCRETE W/ 6x6-W3.5xW3.5 W.W.F.	YES	NO	(4) PER 36" SHEET (3 PER 24" SHEET)	SPACE @ 12" O/C	BUTTON PUNCH @ 24" O/C	1.203	0.767
FD2	3" VERCO W3 x 16 GAUGE FORMLOK DECK	5 1/2"	2 1/2" NORMAL WEIGHT CONCRETE W/ 6x6-W3.5xW3.5 W.W.F.	N.A.	NO	(4) PER 36" SHEET (3 PER 24" SHEET)	SPACE @ 12" O/C	BUTTON PUNCH @ 24" O/C	1.509	0.960
RD1	1 1/2" VERCO HSB-36 x 16 GAUGE DECK	1 1/2" (DKG. ONLY)	RIGID INSULATION OF VARYING THICKNESS PER ARCHITECTURAL	NO	YES	(4) PER 36" SHEET (3 PER 24" SHEET)	SPACE @ 12" O/C	BUTTON PUNCH @ 24" O/C	0.377	0.411

NOTES:

1. PROVIDE VERCO METAL DECKING and ACCESSORIES IN CONFORMANCE WITH ICC-ES EVALUATION REPORT NO. 2078.
2. NO DUCTS, ELECTRICAL OR OTHERWISE, SHALL OCCUR IN FILL UNLESS NOTED OTHERWISE.
3. ARC SPOT (PUDDLE) WELDS SHALL HAVE AN EFFECTIVE FUSION AREA TO SUPPORTING MEMBER AT LEAST 1/2-INCH IN DIAMETER.

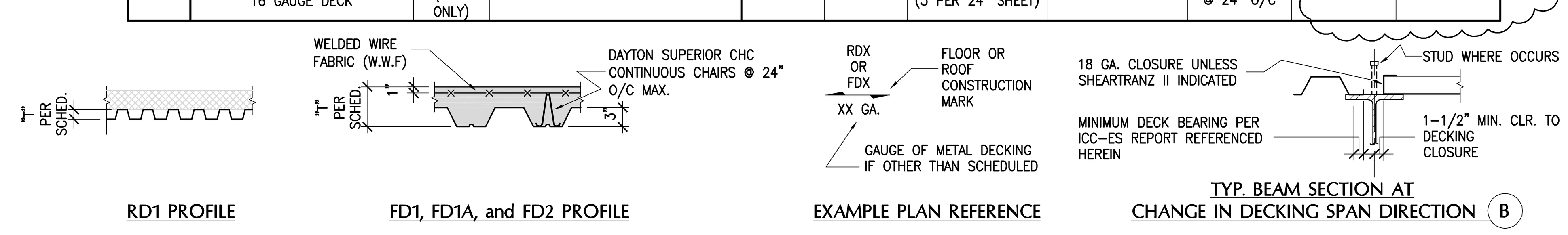

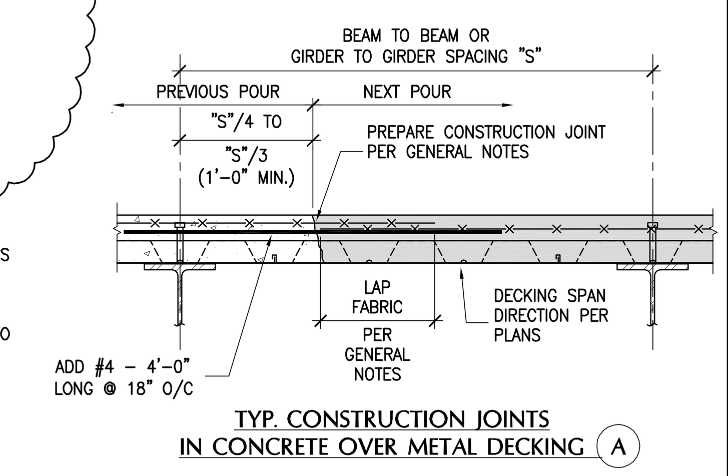

NO SCALE TYPICAL U.N.O.

Bayley Construction
3730 S. Susan St.
Suite 200
Santa Ana, CA. 92704
CA. License 734880
Tel 714-540-8863
Fax 714-556-8863

Bayley Construction
8005 S.E. 28th St.
P.O. Box 9004
Mercer Island, WA. 98040
WA. License BAYLEC034JC
Tel 206-621-8884
Fax 206-343-7728

BAYLEY CONSTRUCTION

Pacific Parking DESIGN
6 Venture, Suite 275
Irvine, California 92618
949.341.0066 t
949.341.0099 f

DLR Group WWCOT
Architecture Engineering Planning Interiors
4280 Latham Street, Suite H
Riverside, California 92501
T 951.682.0470
F 951.682.1801
wwcot.com
dlrgroup.com

Santa Monica
Sacramento
Riverside
Palm Springs
Modesto
Shanghai, China

Copyright © 2010, DLR Group Inc. of California DBA DLR Group WWCOT, All Rights Reserved

REGISTERED PROFESSIONAL ENGINEER SUZANNE DOW NAKAKI SE 3119 EXP. 12/31/11 STRUCTURAL STATE OF CALIFORNIA

Public Agency Submittal:
Issued for Bidding:
Issued for Construction:

Revisions:

A	04-08-2011	City Comments
C	05-12-2011	Bldg. Dept. Re-Submittal
1	09-19-2011	Bulletin 1

Phase I
FOX ENTERTAINMENT PLAZA
3605 Market Street
Riverside, CA 92501

City of Riverside
CITY OF RIVERSIDE
3900 Main Street, Riverside, CA 92522

Phase: CD
Revised : 2-10-11
DLR Group Project No. 75-10603-00

Typical Metal Decking Details

Issued Date: Feb. 10, 2011
Drawn By: JT/MT/CG
Checked By: SDN

A-S032
Sheet №

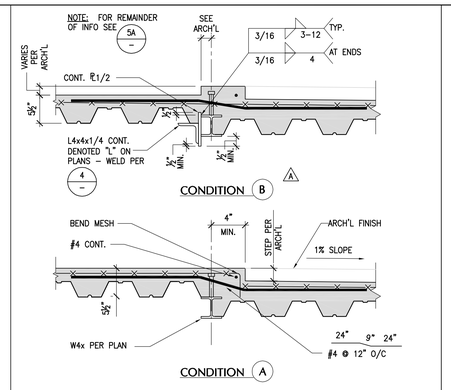

SECTION AT DOORS ON LEVEL 2 | 5

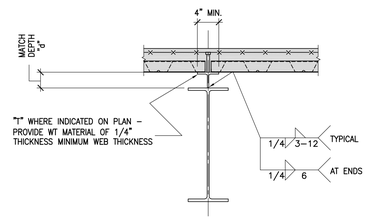

STRUCTURAL TEE CONDITION B

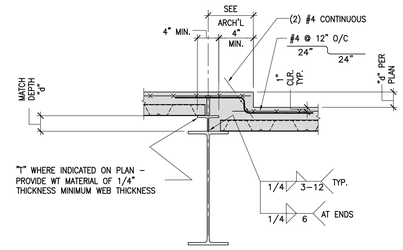

STRUCTURAL TEE CONDITION A

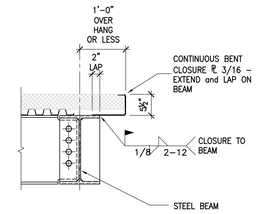

NOTE: AT INTERIOR DECK EDGES FOR DUCT SHAFT OPENINGS, 10 GAUGE BENT CLOSURE ℄ MAY BE SUBSTITUTED FOR 3/16 CLOSURE ℄

DECKING PARALLEL OR SKEWED TO DECK SPAN (1'-0" OVERHANG OR LESS) B

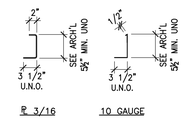

TYPICAL CLOSURE PLATE PROFILES

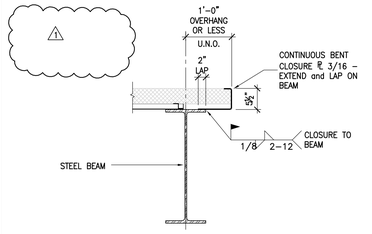

NOTE: AT INTERIOR DECK EDGES FOR DUCT SHAFT OPENINGS, 10 GAUGE BENT CLOSURE ℄ MAY BE SUBSTITUTED FOR 3/16 CLOSURE ℄

DECKING PERPENDICULAR TO DECK SPAN (1'-0" OVERHANG OR LESS) A

TYP. PERIMETER and INTERIOR DECK EDGES (BARE METAL DECKING CONDITION) | 2

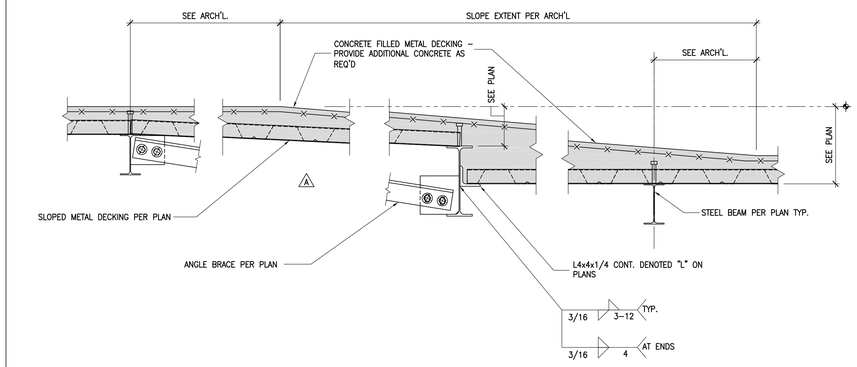

TYPICAL SECTION AT RAMP | 4

BUILT-UP BEAM DETAILS | 3

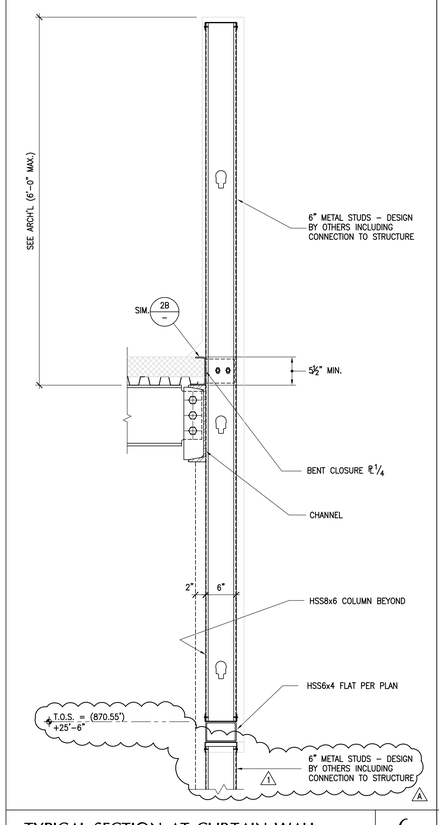

TYPICAL SECTION AT CURTAIN WALL | 6

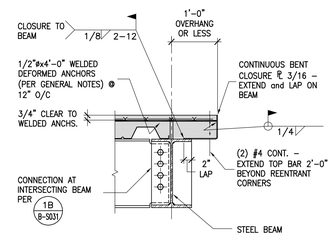

NOTE: AT INTERIOR DECK EDGES FOR DUCT SHAFT OPENINGS, 10 GAUGE BENT CLOSURE ℄ MAY BE SUBSTITUTED FOR 3/16 CLOSURE ℄ and DEFORMED ANCHORS MAY BE OMITTED

CONDITION AT 1'–0" OVERHANG OR LESS 1D

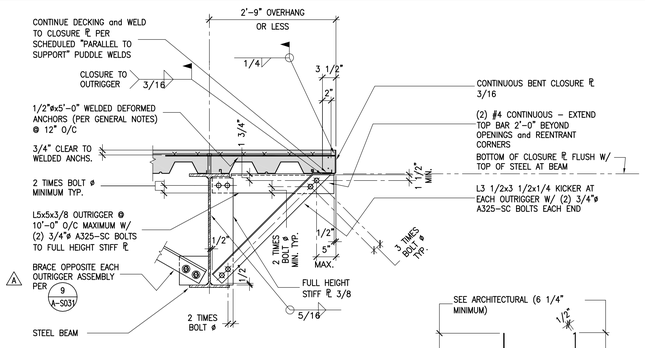

TYPICAL CONDITION 1C

DECKING PARALLEL OR SKEWED TO DECK EDGES

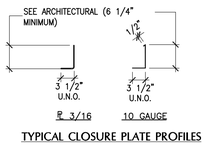

TYPICAL CLOSURE PLATE PROFILES

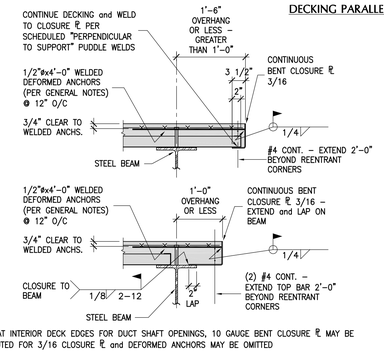

NOTE: AT INTERIOR DECK EDGES FOR DUCT SHAFT OPENINGS, 10 GAUGE BENT CLOSURE ℄ MAY BE SUBSTITUTED FOR 3/16 CLOSURE ℄ and DEFORMED ANCHORS MAY BE OMITTED

CONDITION AT 1'–6" OVERHANG OR LESS 1B

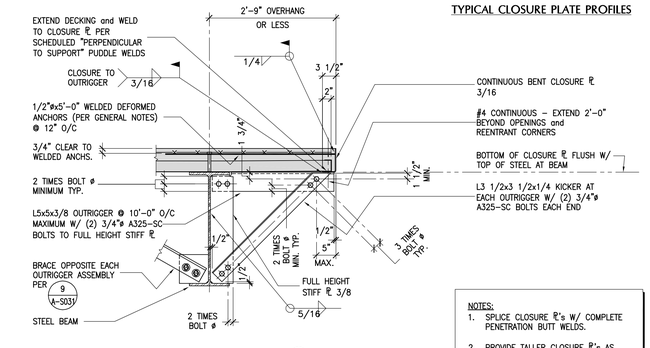

TYPICAL CONDITION 1A

DECKING PERPENDICULAR TO DECK EDGES

NOTES:
1. SPLICE CLOSURE ℄'s W/ COMPLETE PENETRATION BUTT WELDS.
2. PROVIDE TALLER CLOSURE ℄'s AS NECESSARY TO CONTAIN CONCRETE AT RAMPS.

TYPICAL PERIMETER and INTERIOR DECK EDGES (CONCRETE FILLED METAL DECKING CONDITION) | NO SCALE TYPICAL U.N.O. | 1

BAYLEY CONSTRUCTION

Bayley Construction
3730 S. Susan St.
Suite 200
Santa Ana, CA, 92704
CA. License 734880
Tel 714-540-8863
Fax 714-556-8863

Bayley Construction
8005 S.E. 28th St.
P.O. Box 9004
Mercer Island, WA. 98040
WA. License
BAYLEC034JC
Tel 206-621-8884
Fax 206-343-7728

Pacific Parking DESIGN

6 Venture, Suite 275 949.341.0066 t
Irvine, California 92618 949.341.0099 f

DLR Group WWCOT
Architecture Engineering Planning Interiors

4280 Latham Street, Suite H
Riverside, California 92501
T 951.682.0470
F 951.682.1801

wwcot.com
dlrgroup.com

Santa Monica
Sacramento
Riverside
Palm Springs
Modesto
Shanghai, China

Copyright © 2010, DLR Group Inc. of California
DBA DLR Group WWCOT, All Rights Reserved

REGISTERED PROFESSIONAL ENGINEER – CLARENCE DOW WALTERS – SE 3119 – EXP. 12/31/11 – STRUCTURAL – STATE OF CALIFORNIA

Public Agency Submittal:
Issued for Bidding:
Issued for Construction:

Revisions:

#		
A	04-08-2011	City Comments
C	05-12-2011	Bldg. Dept. Re-Submittal
1	09-19-2011	Bulletin 1

Phase I
FOX ENTERTAINMENT PLAZA
3605 Market Street
Riverside, CA 92501

City of Riverside

CITY OF RIVERSIDE

3900 Main Street, Riverside, CA 92522

Phase: CD
Revised : 2-10-11
DLR Group Project No. 75-10603-00

Typical Elevated Floor and Roof Deck Details

Issued Date: Feb. 10, 2011
Drawn By: JT/MT/CG
Checked By: SDN

A-S033
Sheet №

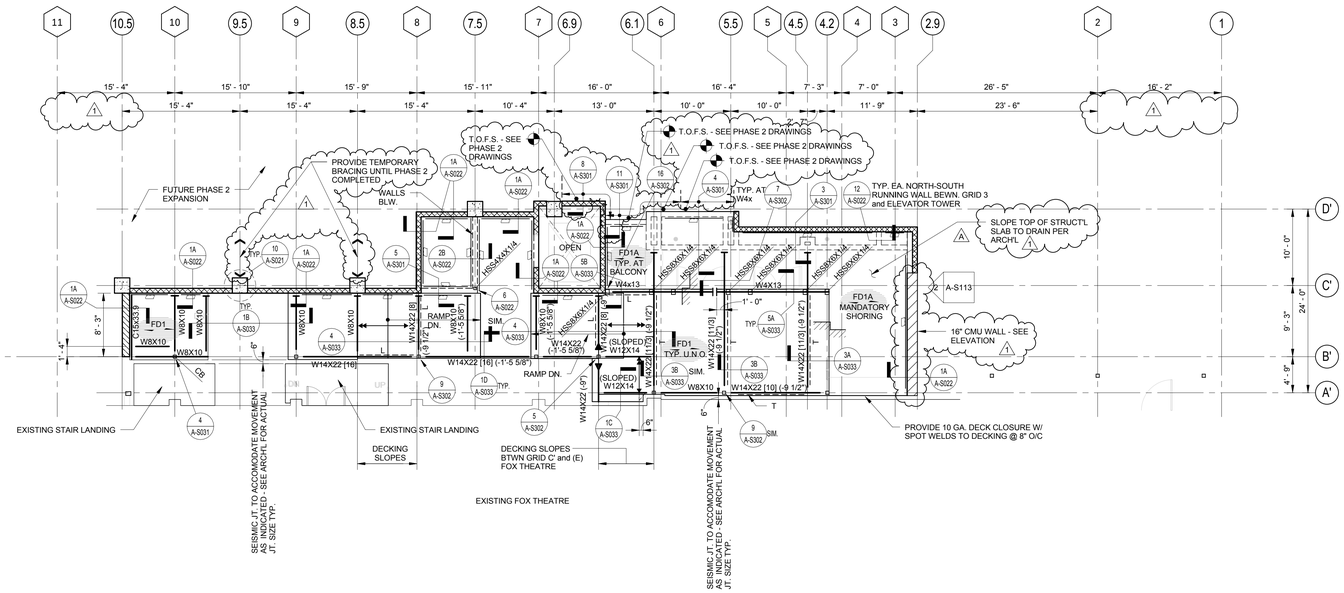

BALCONY LEVEL FRAMING PLAN

Scale 1/8" = 1'-0" 2

FRAMING PLAN NOTES

1. FOR GENERAL NOTES AND TYPICAL DETAILS SEE A-S0 SERIES SHEETS.
2. VERIFY ALL DIMENSIONS PRIOR TO START OF WORK. SEE ARCHITECTURAL DRAWINGS FOR REMAINDER OF DIMENSIONS NOT SHOWN ON THIS PLAN.
3. SEE ARCHITECTURAL DRAWINGS FOR TOP OF STRUCTURAL CONCRETE SLAB ELEVATIONS, DEPRESSIONS, SLOPES, CURBS, DRAINS, PADS, DECK EDGE LOCATIONS; WALL OVERALL DIMENSIONS; AND LOCATIONS OF OPENINGS IN WALLS AND SLABS NOT INDICATED ON STRUCTURAL DRAWINGS.
4. LEGEND:

- TOP OF STRUCTURAL CONCRETE SLAB ELEVATION - VERIFY W/ ARCH'L DWGS. - T.O.F.S. DENOTES TOP OF FUTURE STRUCT'L SLAB ELEVATION AS DEFINED ON 13/A-S022
- CB — INDICATES COLUMN BELOW - IF NO INDICATION, COLUMN CONTINUES TO LEVEL ABOVE - T.O.C. DENOTES TOP OF COLUMN ELEVATION
- HSSXxxXX — INDICATES COLUMN STARTING AT THIS LEVEL and EXTENDING UP TO ROOF ABOVE PER SCHEDULE 1/A-S311
- DENOTES 8" THK. CMU WALL - CONSTRUCT PER 1/A-S021
- DENOTES 12" THK. CMU WALL - CONSTRUCT PER 1/A-S021
- DENOTES 16" THK. CMU WALL - CONSTRUCT PER 1/A-S021
- FDX — INDICATES FLOOR CONSTRUCTION, SEE 1/A-S032
- WXxxX — INDICATES NON-FRAME STEEL BEAM - SEE 1/A-S031 FOR TYPICAL BEAM TO GIRDER CONNECTIONS and 8/A-S031 FOR BEAM TO HSS OR PIPE COLUMN CONNECTIONS UNLESS NOTED OTHERWISE.
- [XX] OR [X/Y/Z] — DENOTES COMPOSITE BEAM METAL DECK STUD REQUIRED ON COMPOSITE STEEL BEAMS PER 2/A-S032 - NO SHEAR STUDS REQUIRED ON W8x10 OR W4x13 BEAMS
- <X"> — DENOTES UPWARD CAMBER (IN INCHES) AT MIDSPAN OF BEAM (IF BEAM CANTILEVERS, HOLD CANTILEVERED PORTION LEVEL) - IF NO CAMBER INDICATED, NO CAMBER REQUIRED
- (-X") — DENOTES ELEVATION OF TOP OF STEEL (TOS) RELATIVE TO TOP OF STRUCTURAL CONCRETE SLAB (AT NON-DEPRESSED FLOORS) - IF NO ELEVATION INDICATED, LOCATE TOS BELOW TOP OF STRUCTURAL CONCRETE AS FOLLOWS:
  5 1/2" .....FD1 — 9 1/2".....FD1A
  0".....FD2
- INDICATES FULL HT. BEAM STIFFENER SHEAR PLATE PER 1B/A-S031
- DENOTES ANGLE BRACE PER 10/A-S031 - SINGLE TRANGLE DENOTES END BRACING BOTTOM FLANGE OF BEAM
- INDICATES NON-FRAME MOMENT CONN. - SEE DETAILS
- INDICATED
- INDICATES BEAM BROKEN BACK SEE 5/A-S031
- INDICATES BEAM SPLICE CONN. - SEE 1D/A-S031 U.N.O.
- T — DENOTES STRUCTURAL TEE - SEE 3/A-S033
- L — DENOTES LEDGER ANGLE - SEE 4/A-S033 and 5/A-S033
- DENOTES BEAM TO EMBED PLATE CONN. IN CMU WALL - CONSTRUCT PER 4/A-S022 U.N.O.
- DENOTES DEPRESSION IN SLAB.

5. ALL EXPOSED STEEL AND CONNECTIONS SHALL BE GALVANIZED OR PAINTED PER ARCH'L REQUIREMENTS.

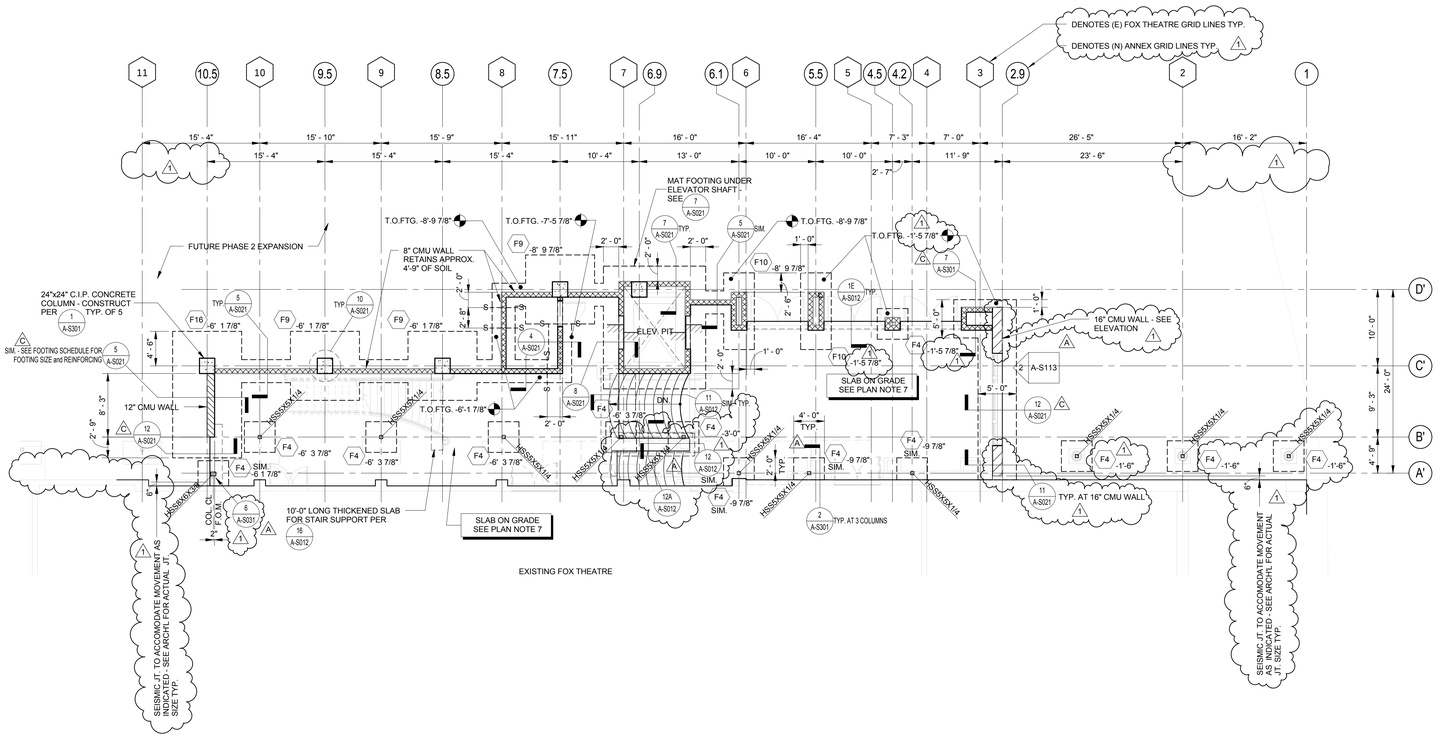

MAIN / ORCHESTRA LEVEL FOUNDATION PLAN

Scale 1/8" = 1'-0" 1

MAIN/ORCHESTRA LEVEL FOUNDATION PLAN NOTES

1. FOR GENERAL NOTES AND TYPICAL DETAILS SEE A-S0 SERIES SHEETS.
2. VERIFY ALL DIMENSIONS PRIOR TO START OF WORK. SEE ARCHITECTURAL DRAWING FOR REMAINDER OF DIMENSIONS NOT SHOWN ON THIS PLAN.
3. SEE ARCHITECTURAL FOR FLOOR ELEVATIONS, DEPRESSIONS, SLOPES, OPENINGS, CURBS, DRAINS, EDGE OF SLAB LOCATIONS, ETC., AND FOR WALL OVERALL DIMENSIONS, LOCATIONS OF OPENINGS, ETC., NOT INDICATED ON STRUCTURAL DRAWINGS.
4. LEGEND:

- TOP OF STRUCTURAL CONCRETE SLAB ELEVATION - VERIFY W/ ARCH'L DWGS.
- HSSXxxXX — DENOTES COLUMN ABOVE - PROVIDE BASE PLATE PER 6/A-S031.
- DENOTES SPREAD FOOTING MARK PER 9/A-S012
- FX X'-X" — DENOTES TOP OF FOOTING ELEVATION RELATIVE TO TOP OF LOWEST CONCRETE SLAB ELEVATION OR LOWEST ADJACENT GRADE ELEVATION (WHICHEVER IS LOWEST) ANYWHERE OVER FOOTING - SEE ARCHITECTURAL DRAWINGS FOR TOP OF CONCRETE SLAB ELEVATIONS - WHERE NO INDICATION ON PLAN, TOP OF FOOTING ELEVATION SHALL BE -1'-0" RELATIVE TO TOP OF LOWEST CONCRETE SLAB ELEVATION OR LOWEST ADJACENT GRADE ELEVATION (WHICHEVER IS LOWER) ANYWHERE OVER FOOTING, U.N.O.
- T.O.FTG. — DENOTES TOP OF FOOTING ELEVATION RELATIVE TO ELEVATION +0'-0"
- DENOTES 8" THK. CMU WALL - CONSTRUCT PER 1/A-S021
- DENOTES 12" THK. CMU WALL - CONSTRUCT PER 1/A-S021
- DENOTES 16" THK. CMU WALL - CONSTRUCT PER 1/A-S021
- S — S — INDICATES STEPPED FOOTING SYMBOL LOCATING STEP AT TOP OF FOOTING - SEE DETAIL 16/A-S011
- DENOTES DEPRESSED SLAB - SEE 1D/A-S012 OR 12/A-S012

5. CENTER COLUMNS ON GRID LINES UNLESS SHOWN OTHERWISE. CENTER SPREAD FOOTINGS ON COLUMNS UNLESS SHOWN OTHERWISE. CENTER CONTINUOUS FOOTINGS UNDER WALLS UNLESS SHOWN OTHERWISE.
6. PROVIDE CONSTRUCTION JOINTS AND WEAKENED PLANE JOINTS (INDICATED AS C.J. AND W.P., RESPECTIVELY) IN SLAB ON GRADE AS SHOWN ON DETAIL 1/A-S012.
7. TYPICAL SLAB ON GRADE CONSTRUCTION SHALL BE AS FOLLOWS: 5" THICK W/ #3 @ 18" o.c. EACH WAY (PLACED AT SLAB MID-HEIGHT) OVER 2" MOIST-CLEAN SAND OVER 10 MIL VISQUEEN VAPOR BARRIER (OVERLAP 24" AND SEAL WITH TAPE) OVER 2" SAND OVER ENGINEERED FILL.
8. PROVIDE 4" MIN. CONC. COVER OVER STRUCTURAL STEEL COLUMNS, BASE PLATES , and ANCHOR BOLTS WHERE ADJACENT TO EARTH.
9. ALL EXPOSED STEEL AND CONNECTIONS SHALL BE GALVANIZED OR PAINTED PER ARCH'L REQUIREMENTS.

Bayley Construction
3730 S. Susan St.
Suite 200
Santa Ana, CA. 92704
CA. License 734880
Tel 714-540-8863
Fax 714-556-8863

Bayley Construction
8005 S.E. 28th St.
P.O. Box 9004
Mercer Island, WA. 98040
WA. License
BAYLEC034JC
Tel 206-621-8884
Fax 206-343-7728

Pacific Parking DESIGN
PPD 10-101

6 Venture, Suite 275 — 949.341.0066 tel
Irvine, California 92618 — 949.341.0099 fax

DLR Group WWCOT
Architecture Engineering Planning Interiors

4280 Latham Street, Suite H
Riverside, California 92501
T 951.682.0470
F 951.682.1801

wwcot.com
dlrgroup.com

Santa Monica
Sacramento
Riverside
Palm Springs
Modesto
Shanghai, China

Copyright © 2010, DLR Group Inc. of California
DBA DLR Group WWCOT, All Rights Reserved

REGISTERED PROFESSIONAL ENGINEER — SUZANNE DOW NAKAMURA — SE 3119 — EXP. 12/31/11 — STRUCTURAL — STATE OF CALIFORNIA

Public Agency Submittal:
Issued for Bidding:
Issued for Construction:

Revisions:

#		
A	04-08-2011	City Comments
C	05-12-2011	Bldg. Dept. Re-Submittal
1	09-19-2011	Bulletin 1

Phase 1
FOX ENTERTAINMENT PLAZA
3605 Market Street
Riverside, CA 92501

City of Riverside

CITY OF RIVERSIDE

DLR Group Project No.75-10603-00

MAIN/ORCHESTRA LEVEL FOUNDATION and BALCONY LEVEL FRAMING PLANS

Issued Date: 2-10-11
Drawn By: JT/MT
Checked By: SN

A-S111
Sheet №

File Path & Name: T:\gsd-cad\revit-local-files\75-10603-00 Fox-Theater-Lobby-Phase-1-Central_Drafter3.rvt
© WWCOT 2009 -- Plotted 9/19/2011 4:05:09 PM

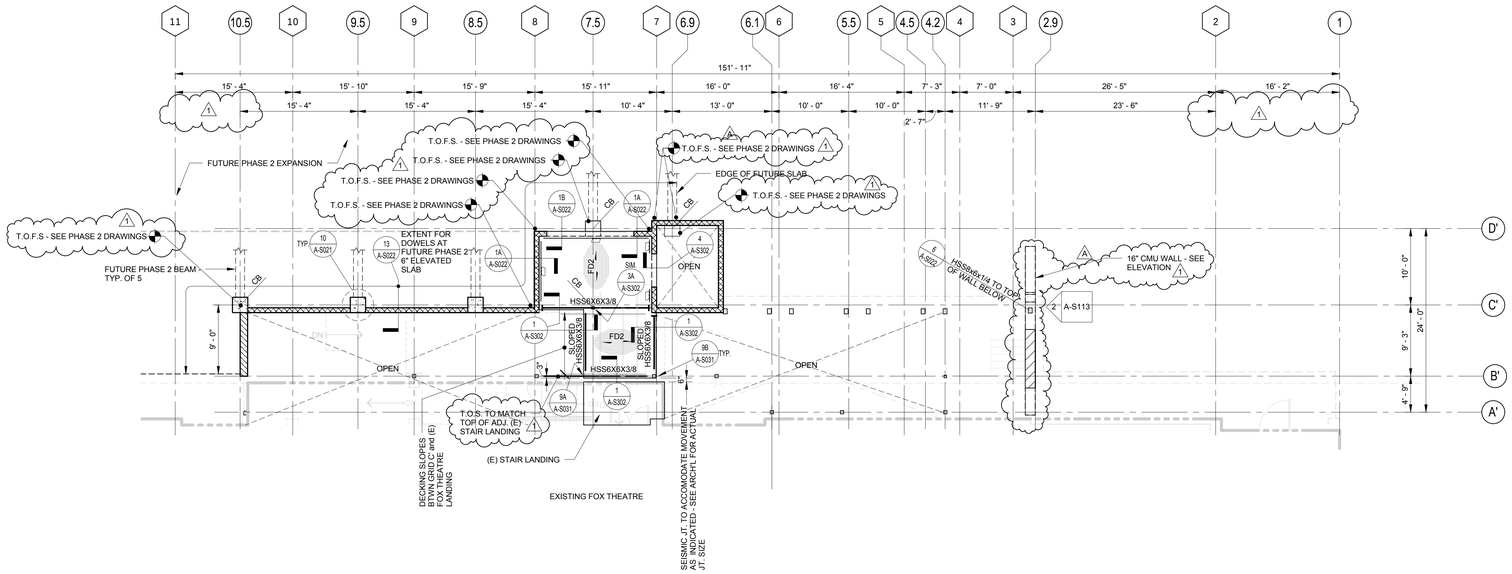

CROSS-AISLE LEVEL FRAMING PLAN

Scale 1/8" = 1'-0" 2

FRAMING PLAN NOTES

1. FOR GENERAL NOTES AND TYPICAL DETAILS SEE A-S0 SERIES SHEETS.
2. VERIFY ALL DIMENSIONS PRIOR TO START OF WORK. SEE ARCHITECTURAL DRAWINGS FOR REMAINDER OF DIMENSIONS NOT SHOWN ON THIS PLAN.
3. SEE ARCHITECTURAL DRAWINGS FOR TOP OF STRUCTURAL CONCRETE SLAB ELEVATIONS, DEPRESSIONS, SLOPES, CURBS, DRAINS, PADS, DECK EDGE LOCATIONS; WALL OVERALL DIMENSIONS; AND LOCATIONS OF OPENINGS IN WALLS AND SLABS NOT INDICATED ON STRUCTURAL DRAWINGS.
4. LEGEND:
   - TOP OF STRUCTURAL CONCRETE SLAB ELEVATION - VERIFY W/ ARCH'L DWGS. - T.O.F.S. DENOTES TOP OF FUTURE STRUCT'L SLAB ELEVATION AS DEFINED ON 13/A-S022
   - CB — INDICATES COLUMN BELOW - IF NO INDICATION, COLUMN CONTINUES TO LEVEL ABOVE - T.O.C. DENOTES TOP OF COLUMN ELEVATION
   - HSSXXXX — INDICATES COLUMN STARTING AT THIS LEVEL and EXTENDING UP TO ROOF ABOVE PER SCHEDULE 1/A-S311
   - DENOTES 8" THK. CMU WALL - CONSTRUCT PER 1/A-S021
   - DENOTES 12" THK. CMU WALL - CONSTRUCT PER 1/A-S021
   - DENOTES 16" THK. CMU WALL - CONSTRUCT PER 1/A-S021
   - FDX — INDICATES FLOOR CONSTRUCTION, SEE 1/A-S032
   - WXxXX — INDICATES NON-FRAME STEEL BEAM - SEE 1/A-S031 FOR TYPICAL BEAM TO GIRDER CONNECTIONS and 8/A-S031 FOR BEAM TO HSS OR PIPE COLUMN CONNECTIONS UNLESS NOTED OTHERWISE.
   - [XX] OR [X/Y/Z] — DENOTES COMPOSITE BEAM METAL DECK STUD REQUIRED ON COMPOSITE STEEL BEAMS PER 2/A-S032 - NO SHEAR STUDS REQUIRED ON W8x10 OR W4x13 BEAMS
   - <X"> — DENOTES UPWARD CAMBER (IN INCHES) AT MIDSPAN OF BEAM (IF BEAM CANTILEVERS, HOLD CANTILEVERED PORTION LEVEL) - IF NO CAMBER INDICATED, NO CAMBER REQUIRED
   - (-X") — DENOTES ELEVATION OF TOP OF STEEL (TOS) RELATIVE TO TOP OF STRUCTURAL CONCRETE SLAB (AT NON-DEPRESSED FLOORS) - IF NO ELEVATION INDICATED, LOCATE TOS BELOW TOP OF STRUCTURAL CONCRETE AS FOLLOWS: 5 1/2" .....FD1 9 1/2".....FD1A 0".....FD2
   - INDICATES FULL HT. BEAM STIFFENER SHEAR PLATE PER 1B/A-S031
   - DENOTES ANGLE BRACE PER 10/A-S031 - SINGLE TRANGLE DENOTES END BRACING BOTTOM FLANGE OF BEAM
   - INDICATES NON-FRAME MOMENT CONN. - SEE DETAILS A INDICATED
   - INDICATES BEAM BROKEN BACK SEE 5/A-S031
   - INDICATES BEAM SPLICE CONN. - SEE 1D/A-S031 U.N.O. A
   - T — DENOTES STRUCTURAL TEE - SEE 3/A-S033
   - L — DENOTES LEDGER ANGLE - SEE 4/A-S033 and 5/A-S033 A
   - DENOTES BEAM TO EMBED PLATE CONN. IN CMU WALL - CONSTRUCT PER 4/A-S022 U.N.O.
   - DENOTES DEPRESSION IN SLAB.
5. ALL EXPOSED STEEL AND CONNECTIONS SHALL BE GALVANIZED OR PAINTED PER ARCH'L REQUIREMENTS.

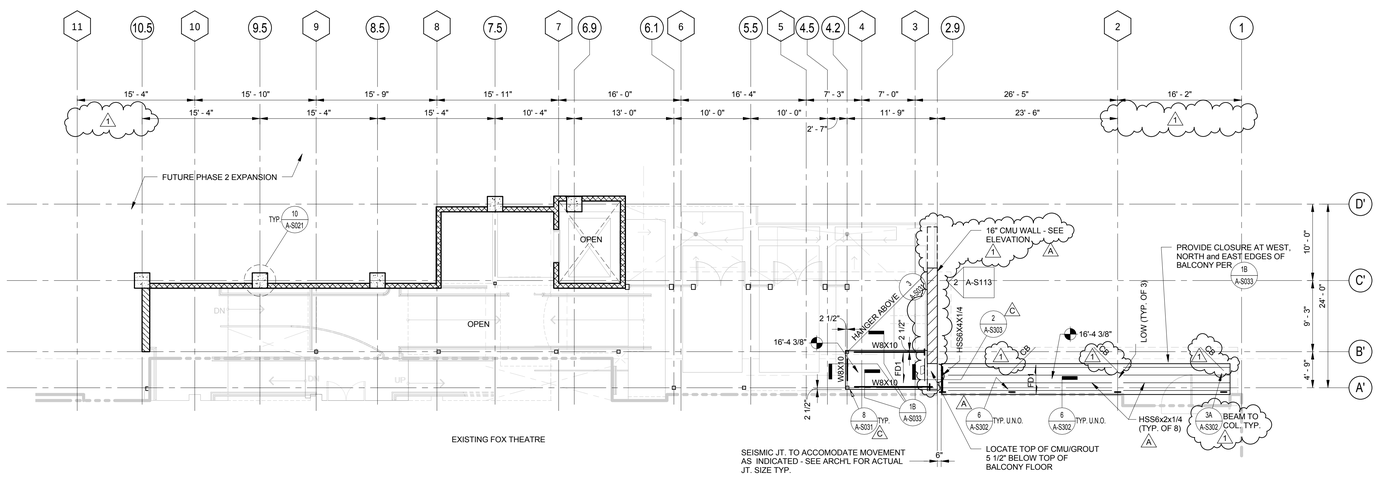

UPPER BALCONY LEVEL FRAMING PLAN

Scale 1/8" = 1'-0" 1

FRAMING PLAN NOTES

1. FOR GENERAL NOTES AND TYPICAL DETAILS SEE A-S0 SERIES SHEETS.
2. VERIFY ALL DIMENSIONS PRIOR TO START OF WORK. SEE ARCHITECTURAL DRAWINGS FOR REMAINDER OF DIMENSIONS NOT SHOWN ON THIS PLAN.
3. SEE ARCHITECTURAL DRAWINGS FOR TOP OF STRUCTURAL CONCRETE SLAB ELEVATIONS, DEPRESSIONS, SLOPES, CURBS, DRAINS, PADS, DECK EDGE LOCATIONS; WALL OVERALL DIMENSIONS; AND LOCATIONS OF OPENINGS IN WALLS AND SLABS NOT INDICATED ON STRUCTURAL DRAWINGS.
4. LEGEND:
   - TOP OF STRUCTURAL CONCRETE SLAB ELEVATION - VERIFY W/ ARCH'L DWGS. - T.O.F.S. DENOTES TOP OF FUTURE STRUCT'L SLAB ELEVATION AS DEFINED ON 13/A-S022
   - CB — INDICATES COLUMN BELOW - IF NO INDICATION, COLUMN CONTINUES TO LEVEL ABOVE
   - HSSXXXX — INDICATES COLUMN STARTING AT THIS LEVEL and EXTENDING UP TO ROOF ABOVE PER SCHEDULE 1/A-S311
   - DENOTES 8" THK. CMU WALL - CONSTRUCT PER 1/A-S021
   - DENOTES 12" THK. CMU WALL - CONSTRUCT PER 1/A-S021
   - DENOTES 16" THK. CMU WALL - CONSTRUCT PER 1/A-S021
   - FDX — INDICATES FLOOR CONSTRUCTION, SEE 1/A-S032
   - WXxXX — INDICATES NON-FRAME STEEL BEAM - SEE 1/A-S031 FOR TYPICAL BEAM TO GIRDER CONNECTIONS and 8/A-S031 FOR BEAM TO HSS OR PIPE COLUMN CONNECTIONS UNLESS NOTED OTHERWISE.
   - [XX] OR [X/Y/Z] — DENOTES COMPOSITE BEAM METAL DECK STUD REQUIRED ON COMPOSITE STEEL BEAMS PER 2/A-S032 - NO SHEAR STUDS REQUIRED ON W8x10 OR W4x13 BEAMS
   - <X"> — DENOTES UPWARD CAMBER (IN INCHES) AT MIDSPAN OF BEAM (IF BEAM CANTILEVERS, HOLD CANTILEVERED PORTION LEVEL) - IF NO CAMBER INDICATED, NO CAMBER REQUIRED
   - (-X") — DENOTES ELEVATION OF TOP OF STEEL (TOS) RELATIVE TO TOP OF STRUCTURAL CONCRETE SLAB (AT NON-DEPRESSED FLOORS) - IF NO ELEVATION INDICATED, LOCATE TOS BELOW TOP OF STRUCTURAL CONCRETE AS FOLLOWS: 5 1/2" .....FD1 9 1/2".....FD1A 0".....FD2
   - INDICATES FULL HT. BEAM STIFFENER SHEAR PLATE PER 1B/A-S031
   - DENOTES ANGLE BRACE PER 10/A-S031 - SINGLE TRANGLE DENOTES END BRACING BOTTOM FLANGE OF BEAM
   - INDICATES NON-FRAME MOMENT CONN. - SEE DETAILS A INDICATED
   - INDICATES BEAM BROKEN BACK SEE 5/A-S031
   - INDICATES BEAM SPLICE CONN. - SEE 1D/A-S031 U.N.O. A
   - T — DENOTES STRUCTURAL TEE - SEE 3/A-S033
   - L — DENOTES LEDGER ANGLE - SEE 4/A-S033 and 5/A-S033 A
   - DENOTES BEAM TO EMBED PLATE CONN. IN CMU WALL - CONSTRUCT PER 4/A-S022 U.N.O.
   - DENOTES DEPRESSION IN SLAB.
5. ALL EXPOSED STEEL AND CONNECTIONS SHALL BE GALVANIZED OR PAINTED PER ARCH'L REQUIREMENTS.

Bayley Construction
3730 S. Susan St.
Suite 200
Santa Ana, CA. 92704
CA. License 734880
Tel 714-540-8863
Fax 714-556-8863

Bayley Construction
8005 S.E. 28th St.
P.O. Box 9004
Mercer Island, WA. 98040
WA. License
BAYLEC034JC
Tel 206-621-8884
Fax 206-343-7728

Pacific Parking DESIGN
PPD 10-101
6 Venture, Suite 275 949.341.0066 tel
Irvine, California 92618 949.341.0099 fax

DLR Group WWCOT
Architecture Engineering Planning Interiors
4280 Latham Street, Suite H
Riverside, California 92501
T 951.682.0470
F 951.682.1801
wwcot.com
dlrgroup.com

Santa Monica
Sacramento
Riverside
Palm Springs
Modesto
Shanghai, China

Copyright © 2010, DLR Group Inc. of California
DBA DLR Group WWCOT, All Rights Reserved

REGISTERED PROFESSIONAL ENGINEER — SUZANNE DOW — SE 3119 — EXP. 12/31/11 — STRUCTURAL — STATE OF CALIFORNIA

Public Agency Submittal:
Issued for Bidding:
Issued for Construction:

Revisions:

#		
A	04-08-2011	City Comments
C	05-12-2011	Bldg. Dept. Re-Submittal
1	09-19-2011	Bulletin 1

Phase 1
FOX ENTERTAINMENT PLAZA
3605 Market Street
Riverside, CA 92501

City of Riverside

DLR Group Project No.75-10603-00

UPPER BALCONY LEVEL FRAMING and CROSS-AISLE LEVEL FRAMING PLANS

Issued Date: 2-10-11
Drawn By: Author
Checked By: Checker

A-S112
Sheet №

File Path & Name: T:\gsd-cad\revit-local-files\75-10603-00 Fox-Theater-Lobby-Phase-1-Central_Drafter3.rvt
© WWCOT 2009 -- Plotted 9/19/2011 4:06:47 PM

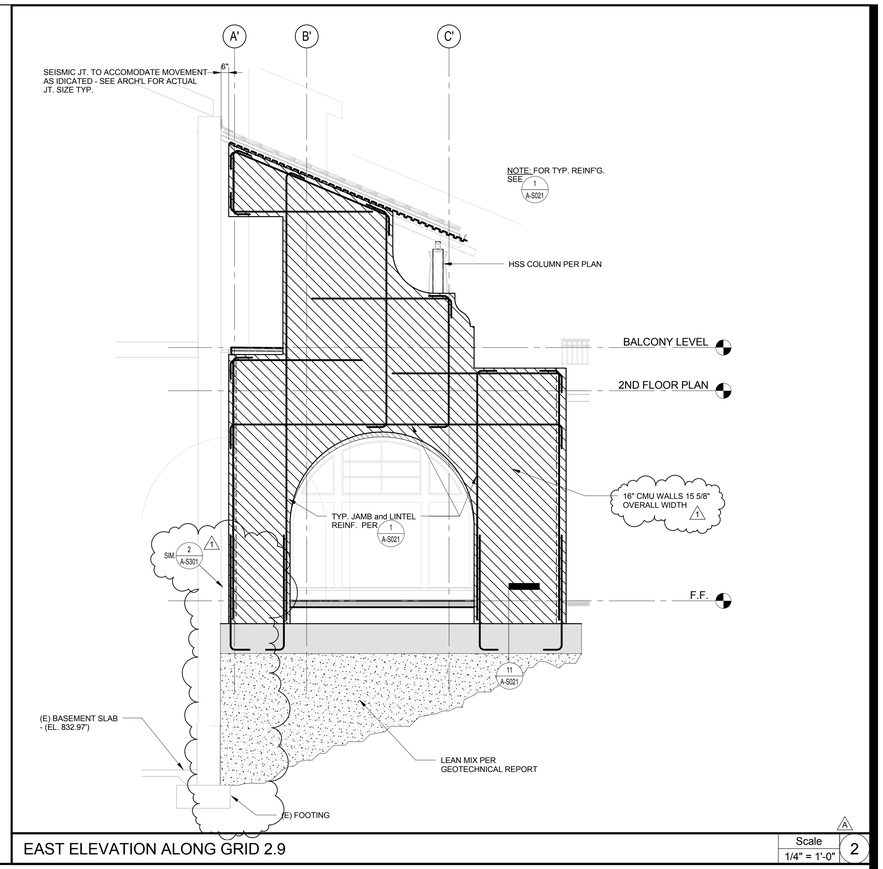

EAST ELEVATION ALONG GRID 2.9

Scale 1/4" = 1'-0" 2

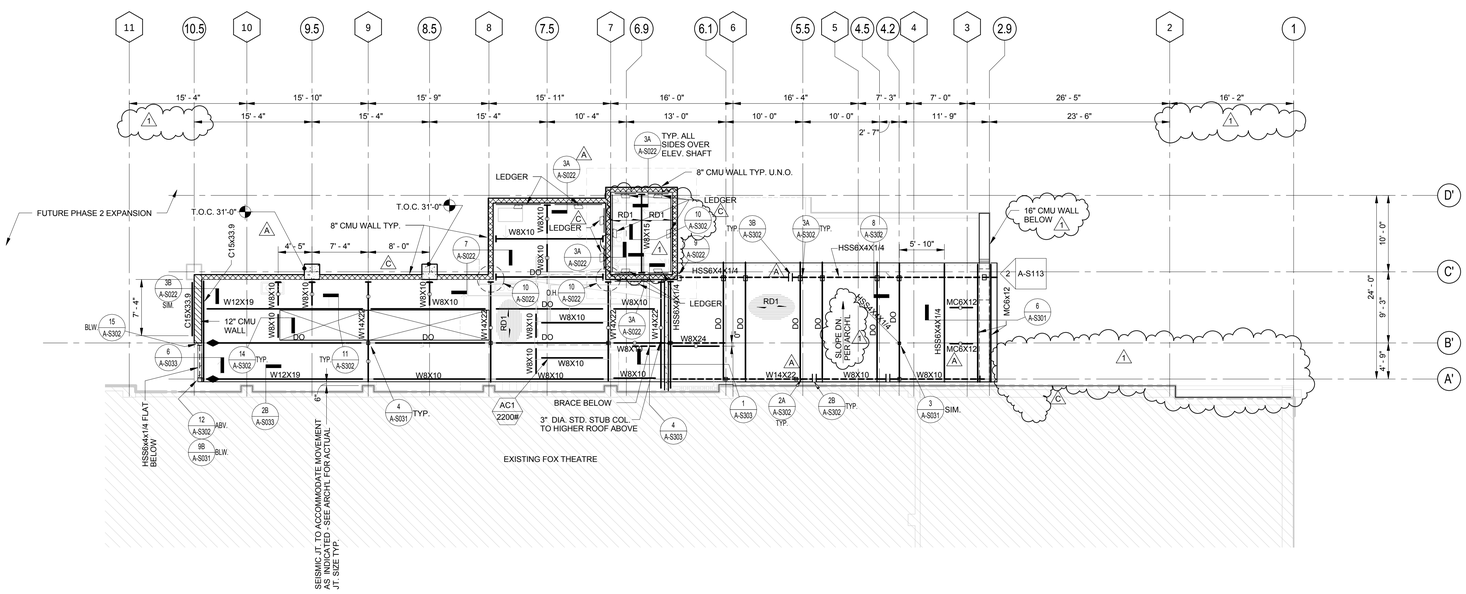

ROOF PLAN

Scale 1/8" = 1'-0" 1

ROOF FRAMING PLAN NOTES

1. FOR GENERAL NOTES AND TYPICAL DETAILS SEE A-S0 SERIES SHEETS.
2. VERIFY ALL DIMENSIONS PRIOR TO START OF WORK. SEE ARCHITECTURAL DRAWINGS FOR REMAINDER OF DIMENSIONS NOT SHOWN ON THIS PLAN.
3. SEE ARCHITECTURAL DRAWINGS FOR TOP OF ROOF and PARAPET ELEVATIONS; ROOF DEPRESSIONS, SLOPES, CURBS, DRAINS, PADS, DECK EDGE LOCATIONS; DIMENSIONS and LOCATIONS OF OPENINGS NOT INDICATED ON STRUCTURAL DRAWINGS.
   - A. SLOPE ROOF DECK/SLAB TO FOLLOW PROFILE OF ROOF SLOPES INDICATED ON ARCHITECTURAL DRAWINGS.
   - B. SLOPE STRUCTURAL STEEL FRAMING TO ACCOMODATE ROOF SLOPES. TYPICAL SLOPING PATTERNS FOR STRUCTURAL STEEL FRAMING MEMBERS ARE INDICATED ON THESE PLANS. SEE ARCHITECTURAL DRAWINGS FOR A COMPREHENSIVE PLAN FOR ROOF DRAINAGE. PATTERN AND COORDINATE ACCORDINGLY.
   - C. THERE SHALL BE NO STEPS OR ELEVATION OFFSETS AT BOTTOM OF STRUCTURAL DECK UNLESS SPECIFICALLY DETAILED ON STRUCTURAL DRAWINGS OR APPROVED BY STRUCTURAL ENGINEER PRIOR TO FABRICATION. STRUCTURAL STEEL FRAMING ELEVATION SHALL PROVIDE FOR CONTINUITY OF ROOF DECK AT ALL CONDITIONS.
4. LEGEND:
   - INDICATES COLUMN BELOW
   - DENOTES 8" THK. CMU WALL - CONSTRUCT PER 1/A-S021
   - DENOTES 12" THK. CMU WALL - CONSTRUCT PER 1/A-S021
   - RDX — INDICATES FLOOR OR ROOF CONSTRUCTION, SEE 1/A-S032
   - WXXXX — INDICATES NON-FRAME STEEL BEAM - SEE 1/A-S031 FOR TYPICAL BEAM TO GIRDER CONNECTIONS and 4/A-S031 FOR BEAM TO HSS OR PIPE COLUMN CONNECTIONS UNLESS NOTED OTHERWISE.
   - <X"> — DENOTES UPWARD CAMBER (IN INCHES) AT MIDSPAN OF BEAM (IF BEAM CANTILEVERS, HOLD CANTILEVERED PORTION LEVEL) - IF NO CAMBER INDICATED, NO CAMBER REQUIRED
   - DENOTES FULL HT. BEAM STIFFENER SHEAR PLATE PER 1B/A-S031
   - DENOTES ANGLE BRACE PER 10/A-S031 - SINGLE TRIANGLE DENOTES END BRACING BOTTOM FLANGE OF BEAM
   - INDICATES NON-FRAME MOMENT CONN. - SEE 7/A-S031
   - INDICATES BEAM BROKEN BACK SEE 5/A-S031
   - INDICATES BEAM SPLICE CONN. - SEE 1D/A-S031
   - DENOTES SUPPLEMENTAL WELDING OF MTL. DECKING TO BEAM - SEE 6/A-S032
   - DENOTES BEAM TO EMBED PLATE CONN. IN CMU WALL - CONSTRUCT PER 4/A-S022 U.N.O.
   - XX-X — INDICATES MECHANICAL UNIT TYPE
   - XXX — INDICATES MECHANICAL UNIT OPERATING WT. IN LBS.
5. FOR FRAMING AT AC UNITS SEE X/SXX and PLATFORMS AT CONDENSING UNITS and MOUNTED EXHAUST FANS SEE X/A-SXX. FOR FRAMING AT ROOF OPENINGS SEE 4 and 5/A-S032. SEE ARCH'L and MECH'L DRAWINGS FOR EXTENT OF OPENINGS. FRAMING FOR SMALL OPENINGS NOT SHOWN FOR CLARITY.
6. ALL EXPOSED STEEL AND CONNECTIONS SHALL BE GALVANIZED OR PAINTED PER ARCH'L REQUIREMENTS.

Bayley Construction
3730 S. Susan St.
Suite 200
Santa Ana, CA. 92704
CA. License 734880
Tel 714-540-8863
Fax 714-556-8863

Bayley Construction
8005 S.E. 28th St.
P.O. Box 9004
Mercer Island, WA. 98040
WA. License
BAYLEC034JC
Tel 206-621-8884
Fax 206-343-7728

BAYLEY CONSTRUCTION

Pacific Parking DESIGN
PPD 10-101
6 Venture, Suite 275 949.341.0066 tel
Irvine, California 92618 949.341.0099 fax

DLR Group WWCOT
Architecture Engineering Planning Interiors
4280 Latham Street, Suite H
Riverside, California 92501
T 951.682.0470
F 951.682.1801
wwcot.com
dlrgroup.com

Santa Monica
Sacramento
Riverside
Palm Springs
Modesto
Shanghai, China

Copyright © 2010, DLR Group Inc. of California
DBA DLR Group WWCOT, All Rights Reserved

REGISTERED PROFESSIONAL ENGINEER
SUZANNE DOW TAMANER
SE 3119
EXP. 12/31/11
STRUCTURAL
STATE OF CALIFORNIA

Public Agency Submittal:
Issued for Bidding:
Issued for Construction:

Revisions:

#		
A	04-08-2011	City Comments
C	05-12-2011	Bldg. Dept. Re-Submittal
1	09-19-2011	Bulletin 1

Phase 1
FOX ENTERTAINMENT PLAZA
3605 Market Street
Riverside, CA 92501

City of Riverside

DLR Group Project No.75-10603-00

ROOF FRAMING PLAN

Issued Date: 2-10-11
Drawn By: Author
Checked By: Checker

A-S113
Sheet №

File Path & Name: T:\gsd-cad\revit-local-files\75-10603-00 Fox-Theater-Lobby-Phase-1-Central_Drafter3.rvt
© WWCOT 2009 -- Plotted: 9/19/2011 10:47:43 AM

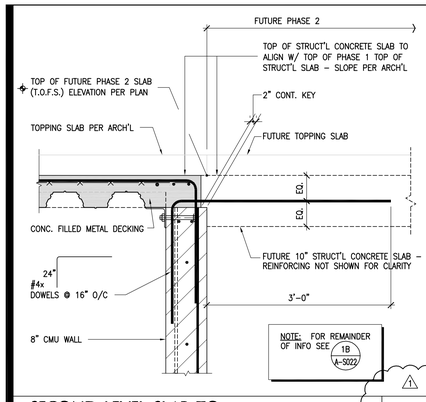

SECOND LEVEL SLAB TO PHASE 2 STRUCTURAL SLAB | 11

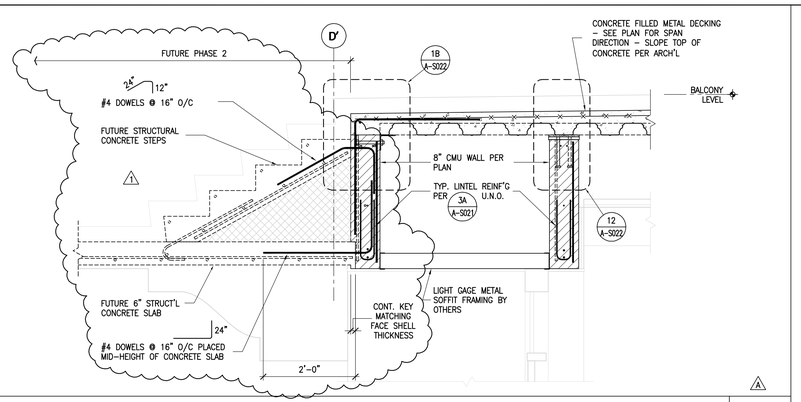

SLAB CONNECTION TO FUTURE CONCRETE STEPS | 4

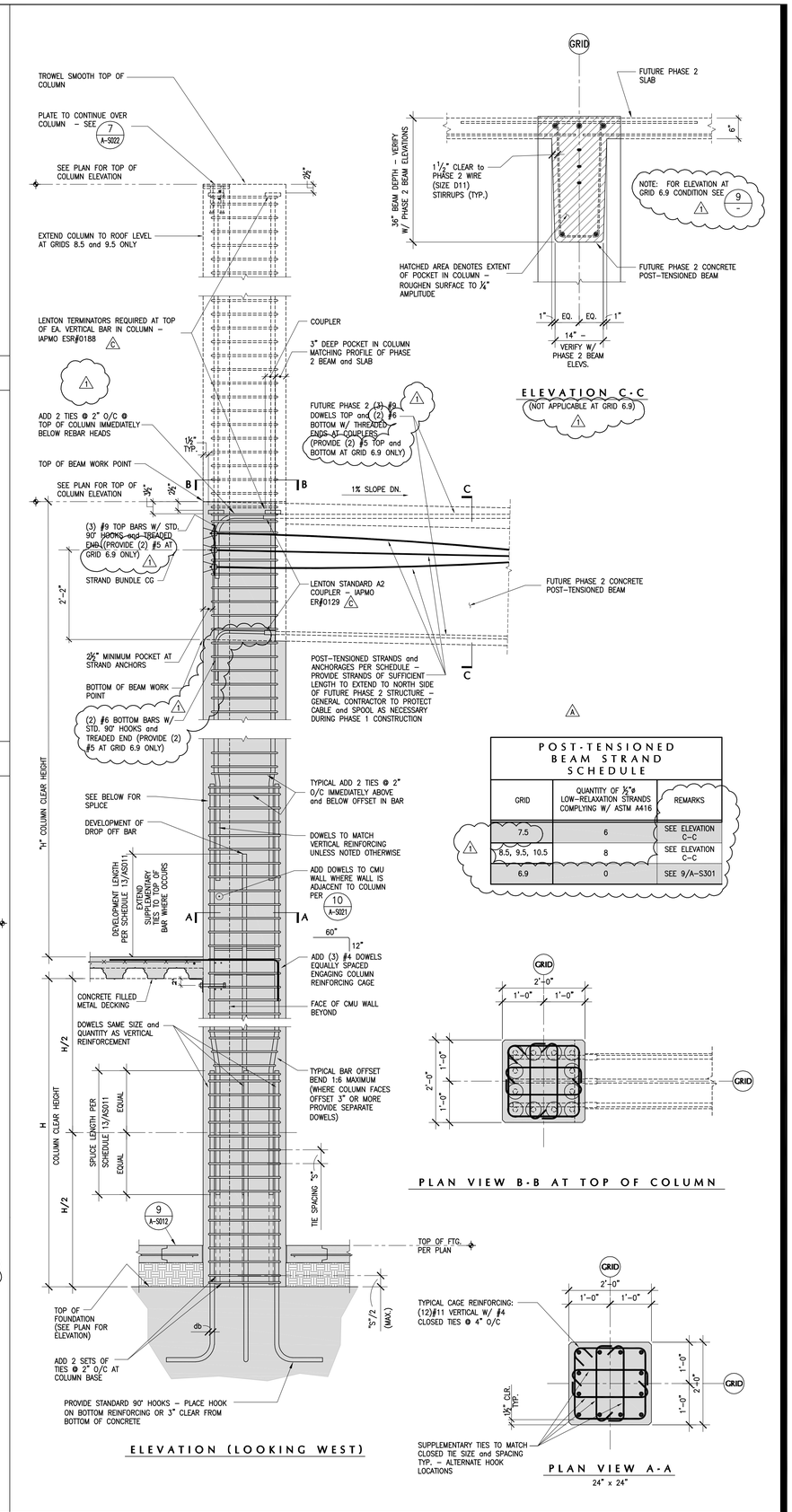

POST-TENSIONED BEAM STRAND SCHEDULE

GRID	QUANTITY OF ½"ø LOW-RELAXATION STRANDS COMPLYING W/ ASTM A416	REMARKS
7.5	6	SEE ELEVATION C-C
8.5, 9.5, 10.5	8	SEE ELEVATION C-C
6.9	0	SEE 9/A-S301

24"x24" CONCRETE COLUMN DETAIL | NO SCALE TYPICAL U.N.O. | 1

NOT USED

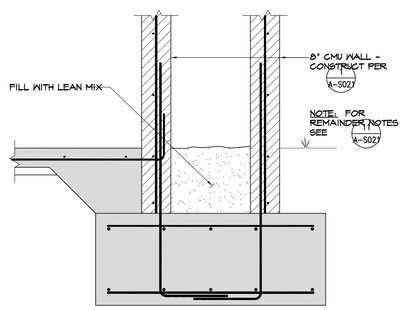

SECTION | 7

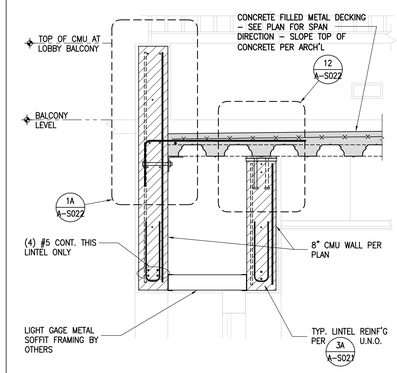

SECTION | 3

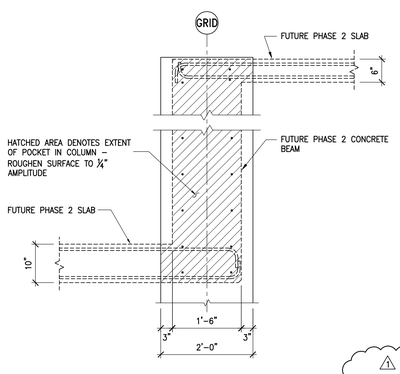

ELEVATION AT COLUMN (GRID 6.9 ONLY) | 9

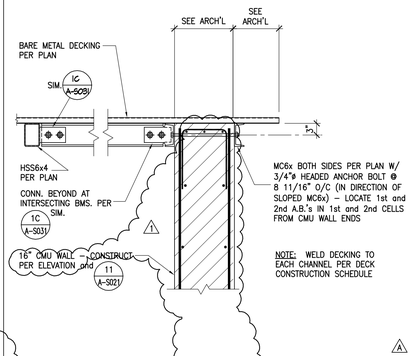

SECTION AT TOP OF 16" CMU WALL | 6

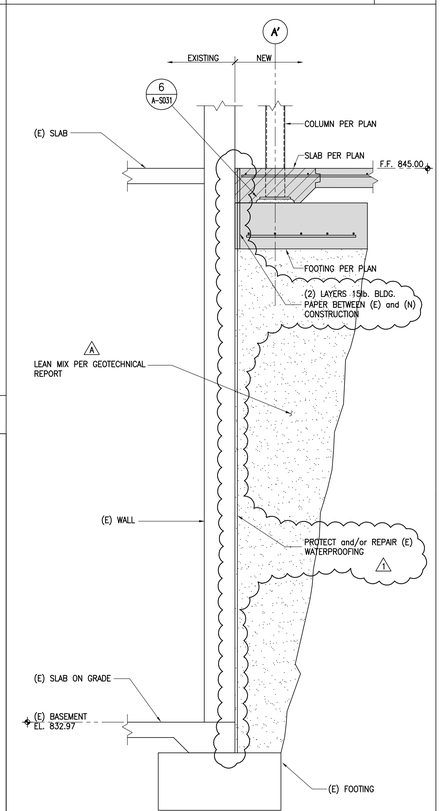

(N) CONC. FOOTING INTO (E) WALL | 2

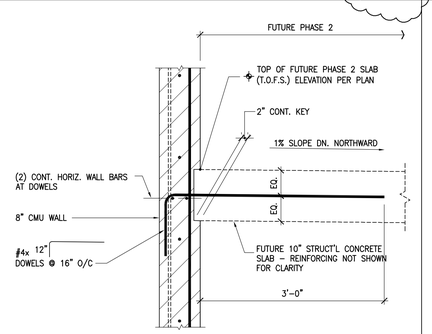

8" CMU WALL TO PHASE 2 STRUCTURAL SLAB | 8

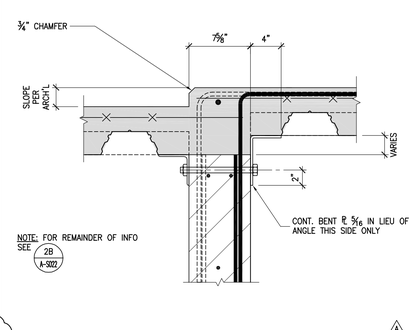

INTERIOR CMU WALL AT RAMP | 5

Bayley Construction
3730 S. Susan St.
Suite 200
Santa Ana, CA, 92704
CA. License 734880
Tel 714-540-8863
Fax 714-556-8863

Bayley Construction
8005 S.E. 28th St.
P.O. Box 9004
Mercer Island, WA. 98040
WA. License
BAYLEC034JC
Tel 206-621-8884
Fax 206-343-7728

Pacific Parking DESIGN
6 Venture, Suite 275 949.341.0066 t
Irvine, California 92618 949.341.0099 f

DLR Group WWCOT
Architecture Engineering Planning Interiors
4280 Latham Street, Suite H
Riverside, California 92501
T 951.682.0470
F 951.682.1801
wwcot.com
dlrgroup.com

Santa Monica
Sacramento
Riverside
Palm Springs
Modesto
Shanghai, China

Copyright © 2010, DLR Group Inc. of California DBA DLR Group WWCOT, All Rights Reserved

REGISTERED PROFESSIONAL ENGINEER – SUNDEEP DOW – SE 31119 – EXP. 12/31/11 – STRUCTURAL – STATE OF CALIFORNIA

Public Agency Submittal:
Issued for Bidding:
Issued for Construction:

Revisions:

#		
A	04-08-2011	City Comments
C	05-12-2011	Bldg. Dept. Re-Submittal
1	09-19-2011	Bulletin 1

Phase I
FOX ENTERTAINMENT PLAZA
3605 Market Street
Riverside, CA 92501

City of Riverside
CITY OF RIVERSIDE
3900 Main Street, Riverside, CA 92522

Phase: CD
Revised : 2-10-11
DLR Group Project No. 75-10603-00

Miscellaneous Details

Issued Date: Feb. 10, 2011
Drawn By: JT/MT/CG
Checked By: SDN

A-S301
Sheet №

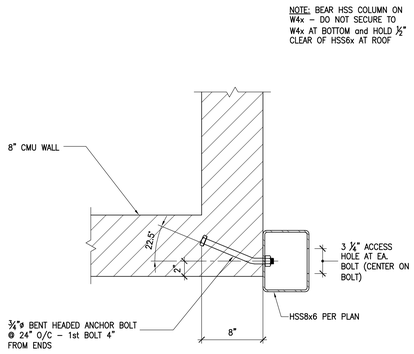

PLAN VIEW AT HSS6x4 ADJ. TO 8" CMU WALL | 16

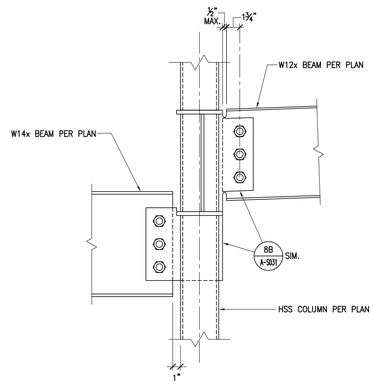

BEAM TO HSS COLUMN CONNECTION | 13

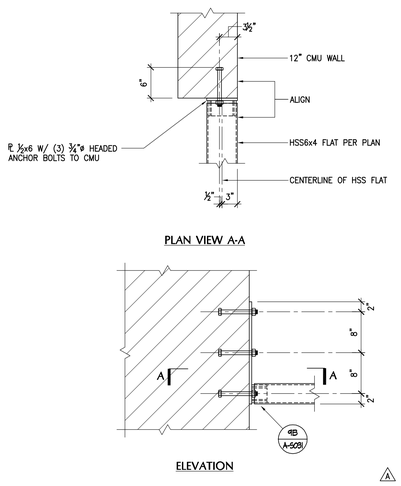

HSS 6x4 FLAT TO CMU WALL | 15

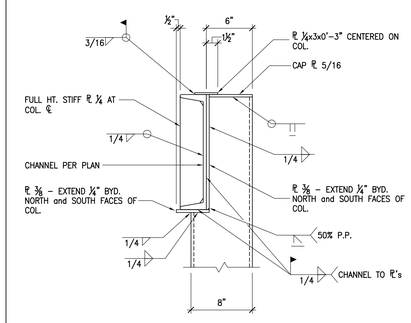

CHANNEL TO OFFSET HSS COLUMN CONN. | 12

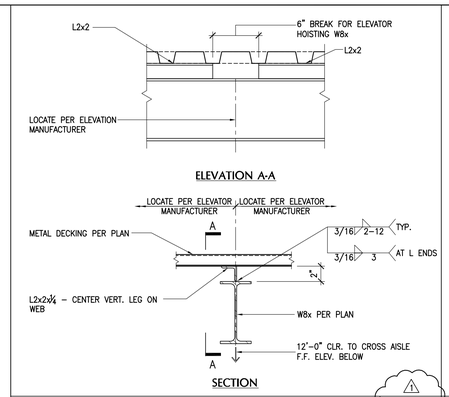

SECTION AT ELEVATOR HOIST BEAM | 10

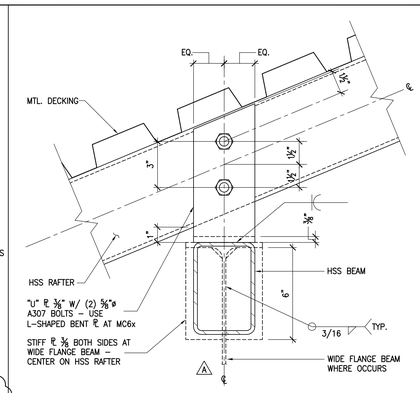

RAFTER TO HSS BEAM SECTION | 8

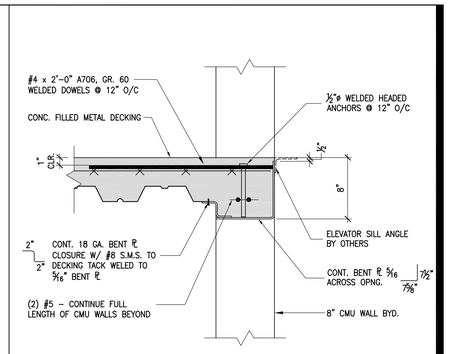

SECTION AT CROSS-AISLE ELEVATOR SILL | 4

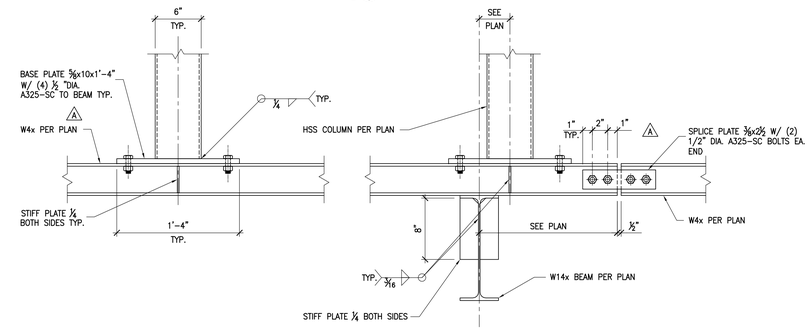

HSS CONNECTION TO W4x BEAM | 7

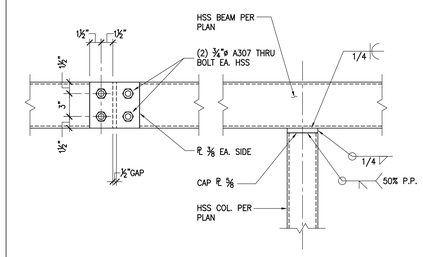

HSS CONN. TO HSS COLUMN | 3

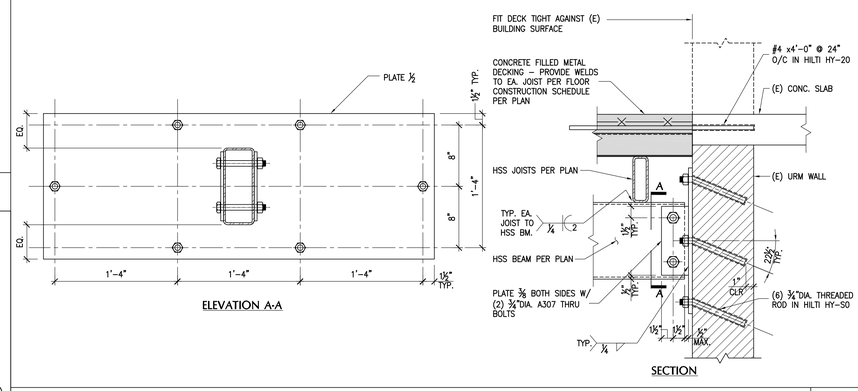

FLOOR TO (E) WALL CONNECTION | 6

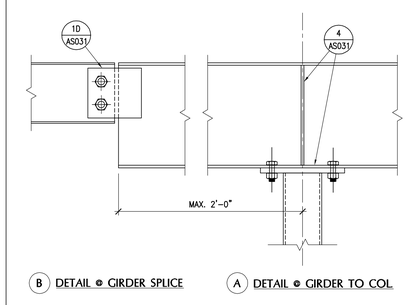

Wx BEAM CONN. TO HSS COLUMN | 2

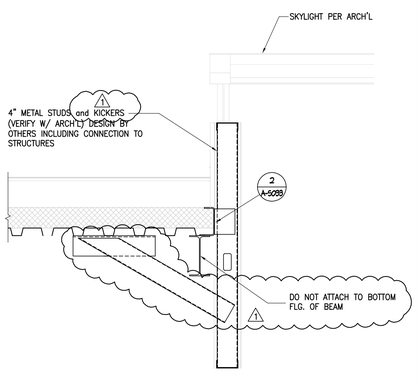

SKYLIGHT ROOF SECTION | 14

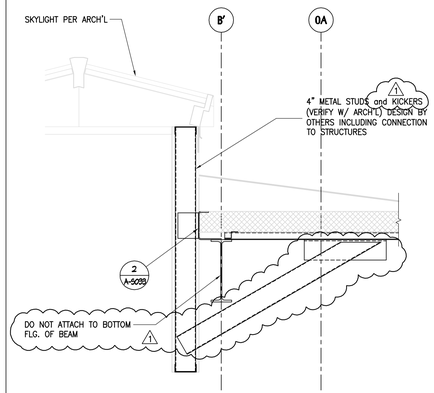

SKYLIGHT ROOF SECTION | 11

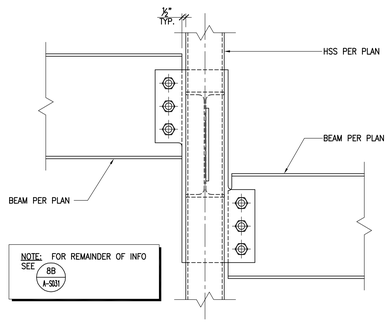

OFFSETTING Wx BEAMS TO HSS COLUMN CONNECTION | 9

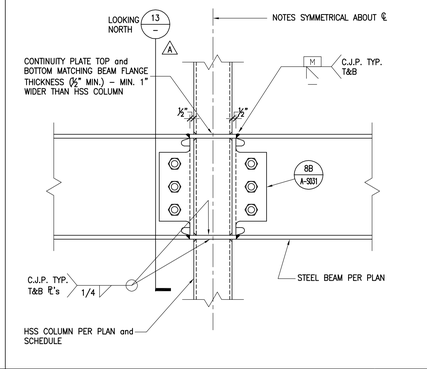

MOMENT CONN. TO HSS COLUMN LOOKING WEST | 5

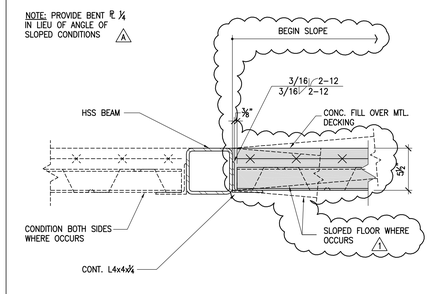

CROSS AISLE FLOOR DETAIL | NO SCALE TYPICAL U.N.O. | 1

Bayley Construction
3730 S. Susan St.
Suite 200
Santa Ana, CA, 92704
CA. License 734880
Tel 714-540-8863
Fax 714-556-8863

Bayley Construction
8005 S.E. 28th St.
P.O. Box 9004
Mercer Island, WA. 98040
WA. License
BAYLEC034JC
Tel 206-621-8884
Fax 206-343-7728

Pacific Parking DESIGN
6 Venture, Suite 275 949.341.0066 t
Irvine, California 92618 949.341.0099 f

DLR Group WWCOT
Architecture Engineering Planning Interiors
4280 Latham Street, Suite H
Riverside, California 92501
T 951.682.0470
F 951.682.1801
wwcot.com
dlrgroup.com

Santa Monica
Sacramento
Riverside
Palm Springs
Modesto
Shanghai, China

Copyright © 2010, DLR Group Inc. of California DBA DLR Group WWCOT, All Rights Reserved

REGISTERED PROFESSIONAL ENGINEER SUNANDEE DOW NALK SE 31119 EXP. 12/31/11 STRUCTURAL STATE OF CALIFORNIA

Public Agency Submittal:
Issued for Bidding:
Issued for Construction:

Revisions:

#		
A	04-08-2011	City Comments
C	05-12-2011	Bldg. Dept. Re-Submittal
1	09-19-2011	Bulletin 1

Phase I
FOX ENTERTAINMENT PLAZA
3605 Market Street
Riverside, CA 92501

City of Riverside
3900 Main Street, Riverside, CA 92522

Phase: CD
Revised : 2-10-11
DLR Group Project No. 75-10603-00

Miscellaneous Details

Issued Date: Feb. 10, 2011
Drawn By: JT/MT/CG
Checked By: SDN

A-S302
Sheet №

NOT USED

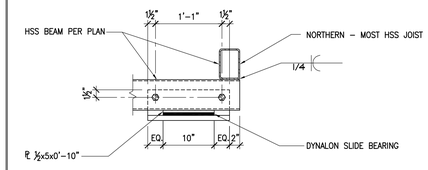

SECTION A-A

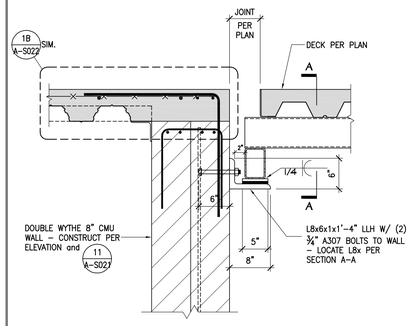

ELEVATION

HSS SLIP CONNECTION TO CMU WALL | 2

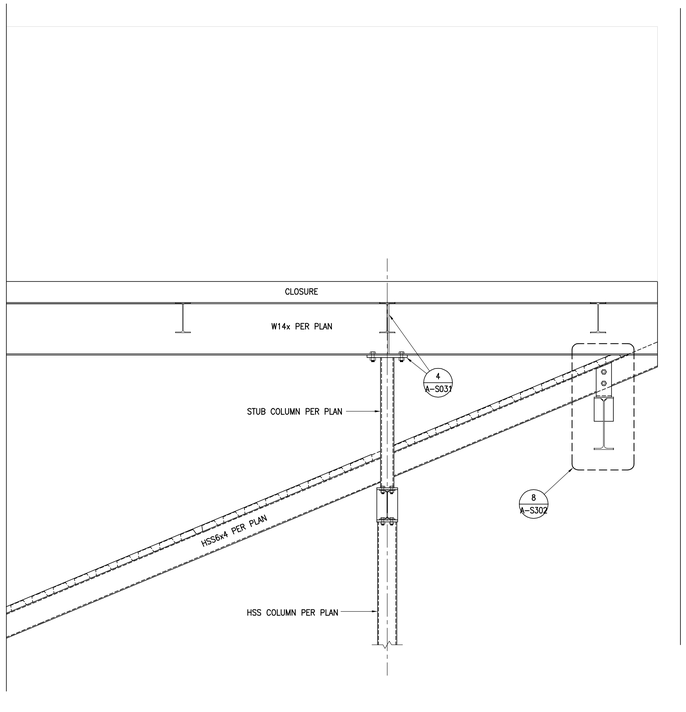

ELEVATION AT PARAPET SEPARATING FLAT and SLOPED ROOFS | 4

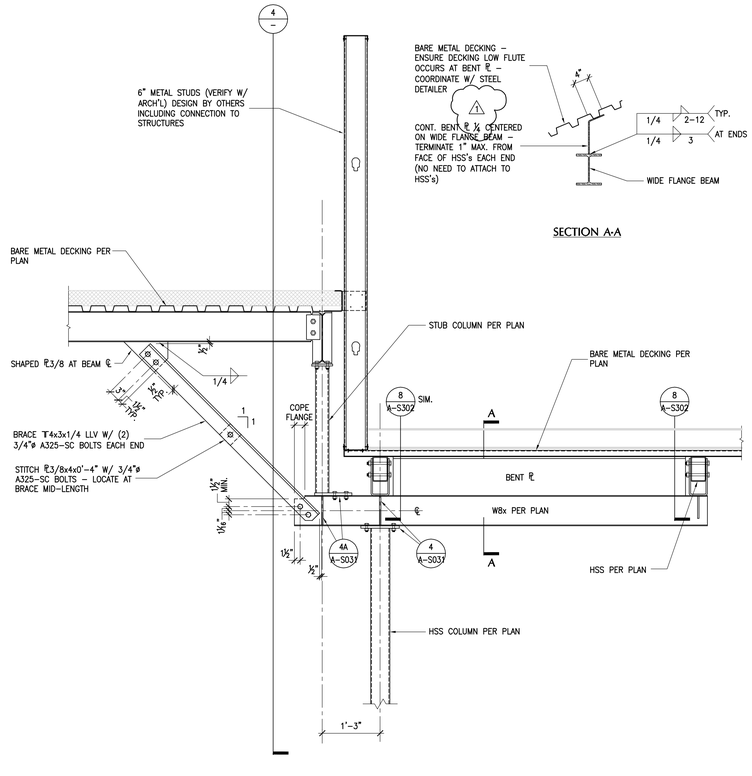

SECTION AT PARAPET SEPARATING FLAT and SLOPED ROOFS | NO SCALE TYPICAL U.N.O. | 1

BAYLEY CONSTRUCTION

Bayley Construction
3730 S. Susan St.
Suite 200
Santa Ana, CA. 92704
CA. License 734880
Tel 714-540-8863
Fax 714-556-8863

Bayley Construction
8005 S.E. 28th St.
P.O. Box 9004
Mercer Island, WA. 98040
WA. License
BAYLEC034JC
Tel 206-621-8884
Fax 206-343-7728

Pacific Parking DESIGN

6 Venture, Suite 275 949.341.0066 t
Irvine, California 92618 949.341.0099 f

DLR Group WWCOT
Architecture Engineering Planning Interiors

4280 Latham Street, Suite H
Riverside, California 92501
T 951.682.0470
F 951.682.1801

wwcot.com
dlrgroup.com

Santa Monica
Sacramento
Riverside
Palm Springs
Modesto
Shanghai, China

Copyright © 2010, DLR Group Inc. of California
DBA DLR Group WWCOT, All Rights Reserved

REGISTERED PROFESSIONAL ENGINEER – SLAWNEE DOW – SE 31119 – EXP. 12/31/11 – STRUCTURAL – STATE OF CALIFORNIA

Public Agency Submittal:
Issued for Bidding:
Issued for Construction:

Revisions:

#		
A	04-08-2011	City Comments
C	05-12-2011	Bldg. Dept. Re-Submittal
1	09-19-2011	Bulletin 1

Phase I
FOX ENTERTAINMENT PLAZA
3605 Market Street
Riverside, CA 92501

City of Riverside

CITY OF RIVERSIDE

3900 Main Street, Riverside, CA 92522

Phase: CD
Revised : 2-10-11
DLR Group Project No. 75-10603-00

Miscellaneous Details

Issued Date: Feb. 10, 2011
Drawn By: JT/MT/CG
Checked By: SDN

A-S303

Sheet №

LOBBY ANNEX SPECIFICATIONS

SECTION 00 01 10

TABLE OF CONTENTS

DIVISION 00

(Not a Part of this Contract)

DIVISION 01

Section 01 11 00 Summary of Work

Section 01 31 00 Project Coordination

Section 01 31 13 Coordination

Section 01 31 19 Project Meetings

Section 01 33 00 Submittal Procedures

Section 01 41 00 Regulatory Requirements

Section 01 42 00 References

Section 01 42 13 Abbreviations

Section 01 42 16 Definitions

Section 01 45 00 Quality Control

Section 01 50 00 Temporary Facilities and Controls

Section 01 60 00 Product Requirements

Section 01 63 00 Product Substitution Procedures

Section 01 70 00 Project Close-Out

Section 01 71 00 Examination

Section 01 72 00 Field Engineering

Section 01 73 29 Cutting and Patching

Section 01 74 00 Cleaning

Section 01 78 13 Warranties and Guarantees

Section 01 79 00 Demonstration and Training

DIVISION 02

(Not a Part of this Contract)

DIVISION 03

Section 03 01 30.61 Polished Concrete Floor System

Section 03 10 00 Concrete Formwork

Section 03 20 00 Concrete Reinforcement
Section 03 30 00 Cast-in-Place Concrete
Section 03 53 00 Concrete Topping

DIVISION 04

Section 04 20 00 Unit Masonry

DIVISION 05

Section 05 12 00 Structural Steel
Section 05 30 00 Metal Decking
Section 05 50 00 Metal Fabrications
Section 05 51 00 Metal Stairs
Section 05 52 13 Pipe and Tube Railing

DIVISION 06

Section 06 41 00 Architectural Wood Casework

DIVISION 07

Section 07 14 00 Fluid-Applied Waterproofing
Section 07 18 00 Traffic Coatings
Section 07 21 00 Thermal Insulation
Section 07 25 00 Weather Barriers
Section 07 32 13 Clay Roof Tiles
Section 07 57 00 Coated Foamed Roofing
Section 07 60 00 Flashing and Sheet Metal
Section 07 72 33 Roof Hatches
Section 07 90 05 Joint Sealers
Expansion Joints

DIVISION 08

Section 08 11 13 Hollow Metal Doors and Frames
Section 08 11 17 Prefinished Steel Door Frames
Section 08 14 16 Flush Wood Doors
Section 08 43 13 Aluminum Framed Storefront

Section 08 51 13 Aluminum Windows
Section 08 71 00 Door Hardware
Section 08 81 00 Glazing
Overhead Coiling Doors

DIVISION 09

Section 09 21 16 Gypsum Board Assemblies
Section 09 22 16 Non-Structural Metal Framing
Section 09 24 23 Portland Cement Stucco
Section 09 30 13 Ceramic Tiling
Section 09 51 00 Acoustical Ceilings and Suspension System
Section 09 55 00 Wood Stage Floor System (EH/BB)
Section 09 90 00 Painting

DIVISION 10

Section 10 21 13 Solid Phenolic Toilet Compartments
Section 10 44 13 Fire Extinguishers and Cabinets
Section 10 51 00 Metal Lockers
Louvers

DIVISION 11

(Not a Part of this Contract)

DIVISION 12

Section 12 36 00 Solid Surfacing

DIVISION 14

(Not a Part of this Contract)

DIVISION 21

(Not a Part of this Contract)

DIVISION 22

Section 22 05 00 Basic Material and Methods

Section 22 05 01 Plumbing
Section 22 07 00 Plumbing Insulation
Section 22 11 23 Plumbing Equipment
Section 22 21 13 Plumbing Piping
Section 22 21 23 Pumps and Specialties
Section 22 40 00 Plumbing Fixtures

DIVISION 23

Section 23 05 00 Basic Material and Methods
Section 23 05 93 Testing, Adjusting and Balancing
Section 23 07 00 HVAC Insulation
Section 23 23 00 Refrigerant Piping Systems
Section 23 31 13 Air Distribution
Section 23 74 13 Packaged HVAC Units
Section 23 81 25 Mini-Split Air Conditioning Units

DIVISION 26

Section 26 00 00 Electrical

DIVISION 27

(Not a Part of this Contract)

DIVISION 28

(Not a Part of this Contract)

DIVISION 31

(Not a Part of this Contract)

DIVISION 32

(Not a Part of this Contract)

DIVISION 33

(Not a Part of this Contract)

END OF SECTION

SECTION 01 57 23

TEMPORARY STORM WATER POLLUTION CONTROL

PART 1 GENERAL

1.01 SECTION INCLUDES

A. The Work of this Section includes all labor, materials, equipment and services necessary to for temporary storm water pollution control.

1.02 DESCRIPTION AND SCOPE

A. The State Water Resources Control Board (SWRCB) has promulgated a General Construction Activity Stormwater Permit (Permit No. 2009-0009-DWQ) hereafter referred to as the General Permit. The General Permit authorizes the discharge of stormwater associated with construction activity from construction sites. The Contractor is required to obtain coverage under this permit. Under the permit requirements, the Contractor shall develop a Storm Water Pollution Prevention Plan (SWPPP) that addresses all of the required elements as stated in the General Permit. In order to obtain coverage under the General Permit, the Contractor shall submit all required documentation and fees to the SWRCB.

B. The General Permit authorizes the discharge of storm water to surface waters from construction activities that result in the disturbance of one or more acres of land. It prohibits the discharge of materials other than storm water and authorized non-storm water discharges and all discharges which contain a hazardous substance in excess of reportable quantities established at 40 Code of Federal Regulations (CFR) 117.3 or 40 CFR 302.4 unless a separate NPDES Permit has been issued to regulate those discharges. In addition, the General Permit contains provisions that uphold discharge prohibitions contained in water quality control plans, as implemented through the nine Regional Water Quality Control Boards (RWQCB).

C. Storm Water Pollution Prevention Plan (SWPPP) Requirements: The Construction General Permit requires the development and implementation of a Storm Water Pollution Prevention Plan (SWPPP), The SWPPP should contain a site map(s) which shows the construction site perimeter, existing and proposed buildings, lost, roadways, stormwater collection and discharge points, general topography both before and after construction, and drainage patterns across the project. The SWPPP must list Best Management Practices (BMPs) the discharger will use to protect storm water runoff and the placement of BMPs.

1.03 REFERENCES

A. State Water Resources Control Board General Construction Storm Water Permit at: http://www.swrcb.ca.gov/water_issues/programs/stormwater/

B. California Stormwater Quality Association (CASQA) Stormwater Best Management Practice (BMP) Handbooks at: http://www.cabmphandbooks.com/

1.04 SUBMITTALS

A. The Contractor is required to submit for approval a Storm Water Pollution Prevention Plan (SWPPP). A copy of the SWPPP must be submitted to the SWRCB prior to conducting any Construction Activity.

PART 2 PRODUCTS

2.01 MATERIALS

A. Contractor shall provide all materials, labor, and testing required to implement the SWPPP.

PART 3 EXECUTION

3.01 IMPLEMENTAION

A. Contractor shall comply will all provisions and requirements of the General Permit and project SWPPP.

B. If a governmental agency or a local governmental authority finds a violation of the above noted requirements, or that the BMP are incomplete, or that the SWPPP is incomplete or that the implementation of the SWPPP is not being performed correctly or completely, full responsibility is borne by the Contractor to make all corrections.

END OF SECTION

SECTION 01 70 00

PROJECT CLOSE-OUT

PART 1 - GENERAL

1.01 RELATED DOCUMENTS

A. Contract General Conditions.

1.02 SUMMARY

A. This Section specifies administrative and procedural requirements for project close-out, including but not limited to:

1. Final inspection procedures.
2. Operating and maintenance manual submittal
3. HVAC balance report
4. Spare parts/materials
5. Keys/keying
6. Submittal of warranties
7. Training
8. Record drawings and specifications
9. Fire Marshal inspection
10. Elevator inspection
11. Other regulatory inspections
12. Removal of temporary facilities
13. Final cleaning
14. Commissioning/equipment startup

1.03 PUNCH-LIST INSPECTION

A. When each building/phase is, in the opinion of the Contractor, complete in all respects, the Contractor shall call for a punch-list inspection.

B. Inspection Procedures: On receipt of a request for inspection, the Riverside County Representative will schedule the Inspection. The Architect will then perform a preliminary walk-through. If, in the judgment of the Riverside County Representative and the Architect, the project is not sufficiently complete in all respects, the Riverside County Representative will so advise the Contractor and discontinue the inspection.

1. The Riverside County Representative and Architect will repeat inspection when requested and assured that the work has been completed.

2. Results of the completed inspection will form the basis of requirements for final acceptance punch-list.

1.04 RECORD DOCUMENT SUBMITTAL

A. General: Do not use record documents set as a working drawing set for construction purposes. Protect from deterioration and loss in a secure, fire-resistive location. Provide access to record documents for The Trustees' and the Architect's reference during normal working hours throughout the course of the Project.

B. Record Drawings: Maintain a clean, undamaged set of blue or black line prints of

Contract Drawings and Shop Drawings. Mark the set to show the actual installation where the installation varies from the Work as originally shown or specified. Mark whichever drawing is most capable of showing conditions fully and accurately; where Shop Drawings are used, record a cross-reference at the corresponding location on the Contract Drawings. Give particular attention to concealed elements that would be difficult to measure and record at a later date.

1. Mark record sets with red erasable pencil; use other colors to distinguish between variations in separate categories of the work.

2. Mark new information that is important to Riverside County, but was not shown on Contract Drawings or Shop Drawings. Show all utilities, obstructions, etc. not previously noted in the Contract Documents, but discovered through completion of the work.

3. Note related Change Order, Field Instruction and RFI numbers where applicable.

4. Update Record Drawings at a minimum of once per week throughout the course of the Project.

5. Organize record drawing sheets into manageable sets, bind with durable paper cover sheets, and print suitable titles, dates and other identification on the cover of each set.

6. Upon completion of the work, submit Record Drawings to the Riverside County Representative for further processing.

C. Record Specifications: Maintain one complete copy of the Project Specifications, including addenda, and one copy of other written construction documents such as Change Orders, Field Instructions, RFI's and modifications issued in printed form during construction. Mark these documents to show substantial variations in actual work performed in comparison with the text of the Specifications and modifications. Give particular attention to substitutions, selection of options and similar information on elements that are concealed or cannot otherwise be readily discerned later by direct observation. Note related record drawing information and Product Data.

1. Upon completion of the work, submit record Specifications to the Architect for Riverside County's records.

D. Operating and Maintenance Manuals: Submit three (3) sets to the Architect for review and approval.

1.05 CLOSE-OUT PROCEDURES: Close-out Meeting

A. The Riverside County Representative will call for a Project close-out meeting approximately four to six weeks prior to the anticipated completion date.

1. At this meeting a completion Action List will be prepared listing all major items required to be completed prior to the issuance of the Notice of Completion.

2. The action-list shall assign a responsibility and a projected completion date to each item.

3. The contractor shall be solely responsible for the timely completion of all required close-out items.

1.06 FINAL CLEANING

A. General Cleaning: General cleaning during the construction period is required by the General Conditions and included in Section 01 50 00 "Temporary Facilities".

B. Cleaning Standards: Employ experienced workers or professional cleaners for final cleaning. Clean each surface or unit to the condition expected in a normal, commercial building cleaning and maintenance program. Comply with manufacturer's instructions.

1. Complete the following cleaning operations before requesting inspection for Certification of Completion.

a. Remove labels that are not permanent labels. Remove temporary protective coverings from finish hardware, toilet accessories and other items.

b. Clean transparent materials, including mirrors and glass in doors and windows (inside and outside). Remove glazing compound and other substances that are noticeable vision-obscuring materials. Replace chipped or broken glass and other damaged transparent materials.

c. Clean exposed exterior and interior hard-surfaced finishes to a dust-free condition, free of stains, films and similar foreign substances. Restore reflective surfaces to their original reflective condition.

d. Leave concrete floors broom clean. Thoroughly clean all finish flooring materials in accordance with manufacturer recommendations to as-new condition. Remove any stains, films, or foreign materials. Thoroughly vacuum all carpets and shampoo if necessary.

e. Wipe surfaces of mechanical and electrical equipment. Remove excess lubrication and other substances. Clean and polish plumbing fixtures to a sanitary condition. Clean light fixtures, lamps and lenses.

f. Clean the site, including landscape development areas, of rubbish, litter and foreign substances. Sweep paved areas broom clean; remove stains, spills and other foreign deposits.

C. Pest Control: Engage an experienced licensed exterminator to make a final inspection, and rid the project of rodents, insects and other pests.

D. Removal of Protection: Remove temporary protection and facilities installed for protection of the work during construction and repair site to previous conditions.

E. Compliance: Comply with regulations of authorities having jurisdiction and safety standards for cleaning. Do not burn waste materials. Do not bury debris or excess materials on the Owner's property. Do not discharge volatile, harmful or dangerous materials into drainage systems. Remove waste materials from the site and dispose of in a lawful manner. Where extra materials of value remaining after completion of associated work have become the Riverside County’s property, arrange for disposition of these materials as directed.

1.07 FINAL ACCEPTANCE

A. Preliminary Procedures: Before requesting final inspection for certification of Riverside

County and Architect's final acceptance, complete the following:

1. Submit a certified copy of the Architect's final inspection list of items to be completed or corrected, stating that each item has been completed or otherwise resolved for acceptance, and the list has been endorsed and dated by the Architect and the Riverside County Representative.

B. Re-inspection Procedure: The Trustees and Architect will re-inspect the work upon receipt of notice that the work, including inspection list items from earlier inspections, has been completed, except items whose completion has been delayed because of circumstances acceptable to the Trustees.

1. Upon completion of re-inspection, the Architect will prepare and submit to The Trustees, a certificate of final acceptance, or advise the Contractor of work that is incomplete or of obligations that have not been fulfilled but are required for final acceptance.

2. Upon final acceptance by the Trustees and the Architect, the Riverside County Representative will then prepare a letter to the Trustees stating that the project has been constructed in accordance with the contract documents and is complete in all respects.

C. Completion Schedule: All punchlist corrections shall be completed by Contractor within 30 days after Substantial Completion or the contract completion date, whichever is earlier. The Trustees reserve the right to complete any outstanding punchlist work remaining after the thirty day period at Contractor's expense.

D. Additional Inspections: Should additional re-inspections be required, Contractor shall reimburse Trustees for Riverside County Representative's and Architect's account for time spent in conducting additional re-inspections at a rate of 2.5 times rate of Direct Personnel Expense (DPE). Direct Personnel Expense is defined as direct salaries of Riverside County Representative's and Architect's personnel engaged on Project and portion of costs of mandatory and customary contributions and benefits related thereto, including employment taxes and other statutory benefits, insurance, sick leave, holidays, vacations, pensions, and similar contributions and benefits.

END OF SECTION

SECTION 03 01 30.61

POLISHED CONCRETE FLOOR SYSTEM

PART - GENERAL

1.01 SUMMARY

A. Polished concrete floor system.

1.02 RELATED SECTIONS

A. Section 03 30 00 Cast-in-Place Concrete.

1.03 REFERENCES

A. ASTM C 1028 – Standard Test Method for Determining the Static Coefficient of Friction of Ceramic Tile and Other Like Surfaces by the Horizontal Dynamometer Pull-Meter Method.

B. ASTM D 523 – Standard Test Method for Specular Gloss.

C. ASTM E 1155 – Standard Test Method for Determining F_F Floor Flatness and F_L Floor Levelness Numbers.

1.04 SYSTEM DESCRIPTION

A. Installation of polished concrete floor system for new interior concrete floors by dry grinding and polishing with various size grit metal-bonded and resin-bonded diamonds and application of concrete densifier.

B. Performance Requirements: Improve performance of floor by installation of polished concrete floor system as measured by the following criteria:
   1. Static Coefficient of Friction, ASTM C 1028:
      a. Dry Surface: 0.60 .
      b. Wet Surface: 0.60
   2. Specular Gloss/Reflectance, ASTM D 523:
      a. 20 Degrees: 70 degrees.
      b. 60 Degrees: 40 degrees.
      c. 85 Degrees: 10 degrees.
   3. Floor Surface Profile, ASTM E 1155:
      a. Floor Flatness Number (F_F): 50.
      b. Floor Levelness Number (F_L): 35.

1.05 SUBMITTALS

A. Comply with Section 01 33 00– Submittal Procedures.

B. Product Data: Submit installer's product data, including surface preparation and installation instructions.

C. Samples: Submit installer's samples of penetrating dye colors. Provide 36" X 36" area for mock-up of each color prior to installation.

D. Installer's Certification: Application to be performed by manufacturer's employed personnel or trained apprentices.

E. Installer's Project References: Submit installer's list of successfully completed polished concrete floor system projects, including project name and location, name of architect, and type and quantity of polished concrete floor system installed. Provide five references minimum.

F. Maintenance Manual: Submit installer's maintenance manual, including maintenance and cleaning instructions for polished concrete floor system.

1.06 QUALITY ASSURANCE

A. Installer's Qualifications:
1. Installer shall prove a minimum 10 years experience with the application of the specified polished concrete system.

B. Mock-Ups
1. Provide 60"X60" mock-up to demonstrate surface finish, color variations and to determine the level of workmanship.
2. Prior to proceeding ensure that mock-up meets all requirements of the architect and the owner's representative.
3. Maintain mock-up during construction in an undisturbed condition as a standard for judging the work.

C. Pre-installation Meeting:
1. Convene pre-installation meeting a minimum of seven days before start of installation of polished concrete floor system.
2. Require attendance of parties directly affecting work of this section, including Owner, Contractor, Architect, and installer.
3. Review examination, surface preparation, installation, field quality control, protection, and coordination with other work.
4. Contractor to record and issue minutes of the meeting

D. No satisfactory chemical or cleaning procedure is available to remove petroleum stains from concrete, therefore prevention is essential. Following precautions to be taken:
1. All hydraulic powered equipment must be diapered to avoid staining of the concrete.
2. Avoid parking vehicles on the interior slab. If necessary to complete the scope of work, drop cloths will be placed under vehicles at all times.
3. Avoid using pipe-cutting machines on the interior floor slab.
4. Avoid rust stains from placing or storing steel on interior slab.

1.07 DELIVERY, STORAGE, AND HANDLING

A. Delivery: Deliver materials to site in manufacturer's original, unopened containers and packaging, with labels clearly identifying product name and manufacturer.

B. Storage:
1. Store materials in clean, dry area indoors in accordance with manufacturer's instructions.
2. Keep materials from freezing.

C. Handling: Protect materials during handling and application to prevent contamination or damage.

PART 2 - PRODUCTS

2.01 MANUFACTURER

A. Basis of Design: Floor Seal Technology, Inc. MirrorCrete Polished Concrete System. Contact: Joshua Reed 800-572-2344 www.floorseal.com

B. Approved Equals
1. International Polished Concrete Institute, PO Box 1174, Norris, Tennessee 37828. Toll Free (866) 421-9550. Phone (865) 494-7881. Fax (865) 494-0872. Website www.ipcionline.org. E-mail info@ipcionline.org.
2. Perfect Polish www.perfectpolishonline.com 1-800-91-SHIN

2.02 EQUIPMENT TO BE USED FOR INSTALLATION

A. Floor Grinder:
1. Equipment to be used for grinding/polishing shall possess at least 500 pounds of head pressure.

B. Vacuum System:
1. Walk-behind auto-scrubber or equivalent with a head pressure of 150 pounds.

C. Diamond Tooling for Coating Removal, Initial Grinding, and Preparing Floor for Polishing:
1. Diamond segments available shall be: 6 Grit through 220 Grit and as applicable.

D. Diamond Tooling for Polishing Concrete:
1. Diamond Polishing Pads available shall be: 30 Grit resin through 400, 800, 1200 or 3000 Grit as applicable.

2.03 MATERIALS

A. Concrete Densifier:

1. Lithium silicate based concrete chemical hardener, sealer and densifier designed to penetrate and react chemically with the surface of the concrete and meeting the following characteristics and properties:
   a. Chemical reaction shall form an insoluble bond with the free lime forming strong tri-calclium silicate compounds that bind together microparticles.
   b. Permanent sealing, densifying and hardening compound for concrete.
   c. Odorless.
   d. VOC: 0
   e. Minimum 16% solids.

B. Concrete Sealer:

1. Micro-film forming hybrid inorganic/organic lithium surface treatment concrete sealer containing lithium chemistry to form an insoluble bond with concrete surfaces meeting the following characteristics and properties:
   a. Lithium microfilm-forming treatment offering increased stain and abrasion resistance.
   b. Minimum 23% solids, containing less than 50 gms/L of VOC content.
   c. Penetrating between 2-8 mm into concrete surface and offering excellent abrasion resistance.

C. Penetrating Dye:

1. Type: Polished Concrete Dye: Solvent-based dye formulated using extremely fine molecules designed to penetrate and color concrete surfaces.

PART 3 - EXECUTION

3.01 EXAMINATION

A. Examine floor to receive polished concrete floor system.

B. Notify Architect of conditions that would adversely affect installation or subsequent use.

C. Do not begin surface preparation or installation until unacceptable conditions are corrected. Start of polishing means acceptance of floor to receive polished concrete floor system.

D. Verify the Following for New Concrete Floors:

1. Floor Finish:
   a. Slabs and flatwork shall be placed and finished monolithically.
   b. Strike off and laser screed slabs to true, plane surfaces at required elevations.
   c. Thoroughly compact concrete with vibrators, floats, and tampers to force coarse aggregate below the surface.
   d. Power trowel with no hand finishing.
   e. Pan float.
   f. Steel finish.
   g. Surface should not be burned due to excessive troweling.
   h. Imprints are not acceptable (i.e. boots, foreign objects dropped into concrete).

2. Floor and Joints:
   a. Free of debris and excessive dirt, dust, clay, and mud.
   b. Dry.
   c. Joints shall be as shown on the drawings.
3. Concrete Compressive Strength: 5,000 psi.
4. Lightweight Concrete: Not allowed if aggregate exposure is required.
5. Concrete Curing: Minimum 8 days water cured or dissipating curing compound applied.
6. Concrete Adjacent to Floor Penetrations: Troweled flat and level with surrounding concrete.
7. Concrete mix design shall contain less than 20% of fly ash or slag replacement.

3.02 SURFACE PREPARATION

A. Protection: Protect surrounding areas and adjacent surfaces from the following:
   1. Minimal accumulation of dust from grinding and polishing.
   2. Contact with overspray of concrete densifier.
   3. Contact with overspray of concrete sealer.

B. Surface Preparation: Prepare surfaces in accordance with installer's instructions.

C. Clean Surfaces: Remove dirt, dust, debris, oil, grease, curing agents, bond breakers, paint, coatings, and other surface contaminants which could adversely affect installation of polished concrete floor system.

3.03 INSTALLATION

A. Install polished concrete floor system in accordance with installer's instructions at locations indicated on the Drawings.
   1. Contractor to arrange for manufacturer's representative to be on site to observe system installation.

B. Aggregate Exposure:

   1. Small aggregate: Mottled salt-and-pepper aggregate exposure.

C. Polished Concrete Floor System: ASTM D523, 400 grit finish.

   1. Preparation Step:
      a. Remove existing floor coatings by grinding with 16-grit metal-bonded diamonds.
      b. Remove existing floor coatings and level floor by grinding with 40-grit metal-bonded diamonds.
      c. Open-up concrete to accept concrete densifier by grinding with 80-grit metal-bonded diamonds.
   2. Apply concrete densifier to deeply saturate floor.
   3. Remove residue of concrete densifier dried on floor surface by grinding with 150-grit metal-bonded diamonds.
   4. Floor Closure Polishing:
      a. Remove 150-grit metal-bonded diamond scratches by grinding with 100-grit resin-bonded diamonds.
      b. Remove 150-grit metal-bonded and 100-grit resin-bonded diamond scratches by grinding with 200-grit resin-bonded diamonds.
   5. Achieve low-sheen finish by grinding with 400-grit resin-bonded diamonds
   6. Apply concrete sealer. Apply additional coats to increase level of sheen.
   7. Burnish each coat with the use of a high-speed propane burnisher and a 3M purple diamond pad.

D. Penetrating Dye:

   1. Mix dye in accordance with installer's instructions.
   2. Apply penetrating dye as last step before applying concrete sealer in accordance with installer's instructions.
   3. Apply penetrating dye at 400-grit resin-bonded diamond-grinding step in accordance with installer's instructions.
   4. Thoroughly wipe surface clean of excess dye residue with acetone in accordance with installer's instructions.
   5. Repeat application of penetrating dye if due to porosity of floor or darker color is desired.

3.04 FIELD QUALITY CONTROL

A. Inspect completed polished concrete floor system with Owner, Contractor, Architect, and Installer.

B. Review procedures with Architect to correct unacceptable areas of completed polished concrete floor system.

C. Testing: Test the following from completed polished concrete floor system:

1. Static Coefficient of Friction, ASTM C 1028:
   a. Dry surface: .60
   b. Wet surface: .60
2. Specular Gloss/Reflectance, ASTM D 523:
   a. 20 Degrees: 70 degrees.
   b. 60 Degrees: 40 degrees.
   c. 85 Degrees: 10 degrees.
3. Floor Surface Profiles, ASTM E 1155:
   a. Floor Flatness Number (F_F). :50
   b. Floor Levelness Number (F_L). :35

D. Test Results:
1. Report test results in writing to Owner, Contractor, and Architect within 24 hours after tests.
2. Compare test results from tests performed before and after installation of polished concrete floor system.
3. Contractor is responsible for remediation work if test results yield unsatisfactory results or non-compliance with project requirements, at no cost to the city.
4. Contractor is responsible for costs of all tests & inspections after the first test/inspection, at no cost to owner.

3.05 PROTECTION

A. Protect completed polished concrete floor system from damage until final occupancy.
1. Do not allow vehicle and pedestrian traffic on unprotected floor.
2. Do not allow construction materials, equipment, and tools on unprotected floor.

B. Immediately remove mortar splatter, spilled liquids, oil, grease, paint, coatings, and other surface contaminants which could adversely affect completed polished concrete floor system.

C. Repair damaged areas of completed polished concrete floor system to satisfaction of Architect.

END OF SECTION

SECTION 03 10 00

CONCRETE FORMWORK

PART 1 GENERAL

1.01 SUMMARY:

A. Section Includes: Furnishing, installing, and removing of forms for cast-in-place concrete.

B. Related Documents: The Conditions of the Contract and Division 1 apply to this section as fully as if repeated herein.

1.02 REFERENCES:

The editions of the specifications and standards reference herein, published by the following organizations, apply to the formwork only to the extent specified by the reference.

American Concrete Institute (ACI)
Corps of Engineers
U.S. Department of Commerce Product Standard (PS)
Western Wood Products Association (WWPA)
West Coast Lumber Inspection Bureau (WCLIB)

1.03 REGULATORY REQUIREMENTS:

Except as modified by the requirements specified herein or the details on the drawings, formwork shall conform to the California Building Code (CBC), Chapter 19.

PART 2 PRODUCTS

2.01 MATERIALS:

A. Forms for Unexposed Concrete: Form concrete surfaces which will not be exposed in the finished structure with plywood, lumber, metal or other acceptable material.

1. Lumber: Standard or better grade Douglas fir, meeting the requirements of WCLIB "Standard Grading Rules #16, 1984 Edition or WWPA "Western Lumber Grading Rules 88". Use boards which are surfaced on at least 2 edges and one side for a tight fit.

2. Plywood: B-B Plyform, Class I, Exterior grade meeting the requirements of PS 1-83, 5/8 inch minimum thickness for 12 inch stud spacing and 3/4 inch minimum thickness for 16 inch stud spacing.

B. Forms for Exposed Finish Concrete: Construct formwork for exposed concrete surfaces with plywood, metal, metal-framed plywood faced or other acceptable panel-type materials, to provide continuous, straight, smooth, exposed surfaces. Furnish in largest practical sizes to minimize number of joints. Provide form material with sufficient thickness to withstand pressure of newly placed concrete without bow or deflection.

1. Where an as cast surface finish is indicated, provide High Density Overlay Plyform Class I Exterior plywood meeting the requirements of PS 1-95.

2. Where sacked, rubbed or sandblasted surface finish is indicated, provide B-B Plyform Class I Exterior plywood meeting the requirements of PS 1-95.

C. Framing, Studding and Bracing: "Standard" or "Construction" grade Douglas fir, rough or S4S, meeting the requirements of the WCLIB "Standard Grading Rules No. 16" or WWPA "Western Lumber Grading Rules 88".

D. Form Ties and Spreaders: Standard metal form clamp assembly, of type acting as spreaders and leaving no metal within 1 inch of concrete face. Inner tie rod shall be left in concrete when forms are removed. Wire ties or wood spreaders will not be permitted.

E. Form Coating: Nongrain raising and nonstaining type that will not leave residual matter on surface of concrete or adversely affect proper bonding of subsequent application of other material applied to concrete surface. Coatings containing mineral oils or other nondrying ingredients will not be permitted. Form coating for use with form liners shall be of type recommended by form liner manufacturer.

F. Nails: Common wire, steel.

PART 3 EXECUTION

3.01 DESIGN OF FORMWORK:

A. Carry out the engineering and construction of all formwork, shoring and bracing, by and under the direction of the Contractor. The Contractor shall be held responsible for the engineering, construction, maintenance, and safety of all formwork during the entire construction period.

B. The formwork shall be designed for the loads and lateral pressures outlined in Part 3, Section 102, of ACI 347, and lateral forces as specified by the CBC.

3.02 CONSTRUCTION:

A. Earth Forms: Earth forms may be used for footings only where the soil is firm and stable and the concrete will not be exposed to view. Where earth forms are to be used, excavations shall be cut neat and accurately to size for placing of concrete directly against the excavation. Except for bottom of footings, allow for one inch additional concrete beyond the dimensions or profiles shown on the drawings. Construct wood edge strips at each side of trench at top to secure reinforcing and prevent trench from sloughing. Form sides of footings where earth sloughs more than six inches. Earth forms shall be tamped firm and cleaned of all debris and loose material before depositing concrete.

B. Wood forms: Construct forms of sound material to the correct shape and dimensions, mortar tight, and of sufficient strength, and so braced and tied together that the movement of men, equipment, materials, or placing and vibrating the concrete will not throw them out of exact shape under imposed loads. They shall be so constructed that they may be easily removed without damage to the concrete. Before concrete is placed in forms, carefully verify the horizontal and vertical position of the form and correct inaccuracies. Complete wedging and bracing in advance of placing of concrete.

C. Form Liners: Position liners on the forms so that grooves and joints are aligned with tie slots. Attach form liners to plywood forms with staples and to metal forms with sheet metal screws or pop rivets. Space fasteners not to exceed 4 inches on centers around the perimeter of each

sheet. Place staples perpendicular to the edges. Install staples using a power staple with pressure regulated so that staple heads are driven flush with the surface. Seal joints between liners and joints at top and bottoms of liners with foam tape placed on the back side of liners.

D. Framing bracing, supporting members, and centering shall be of ample size and strength to safely carry, without deflection, dead and live loads to which forms may be subjected, and shall be spaced sufficiently close to prevent bulging or sagging of forms. Concrete out of line, level, or plumb will be cause for rejection of the whole construction affected.

E. Tolerances: Formwork shall be constructed so as to ensure that the concrete surfaces will conform to the tolerances of Section 203.1, ACI 347. Camber formwork where necessary to compensate for anticipated deflections due to fresh concrete and construction loads.

F. Chamfered Corners: Chamfer exposed corners 3/4 inch, unless otherwise indicated. Provide molding in forms for all chamfering required.

G. Form Ties: Use ties of sufficient strength and in sufficient quantities to prevent spreading of the forms. Place ties at least 1 inch away from the finished surface of the concrete.

H. Arrangement: Arrange formwork to allow proper erection sequence and to permit form removal without damage to concrete.

I. Joints: Install construction joints, isolation joints, shrinkage control joints and expansion joints as approved. Coordinate location of construction joints, particularly those exposed to view to walls and columns, in advance of concrete placement.

J. Embedded Piping and Rough Hardware:

1. Coordinate with other trades who are required to fasten materials to formwork, or who are required to insert piping, boxes, bolts, anchors, inserts, or other rough hardware, within the forms.

2. Locate conduits or pipes so as not to reduce the strength of the construction, and in no case place in a slab less than 4 inches thick except for local offsets. Do not bury conduit in a concrete slab with an outside diameter greater than 30 percent of the thickness of the slab, and do not place conduit under slab reinforcing steel, except for slab mesh.

K. Frame openings in slabs for floor hinges where indicated or scheduled. Accurately frame openings to template furnished by floor hinge manufacturer for type of floor hinge specified. Chipping of concrete floors for installation of floor hinges will not be permitted.

L. Waterstops: Install waterstops to form a continuous diaphragm at each joint. Make provisions to support and protect exposed waterstops during progress of construction. Fabricate field joints in waterstops in accordance with manufacturer's printed instructions.

M. Coating of Forms: Thoroughly clean forms and coat with specified form coating before each use. Do not reuse forms for exposed construction which cannot be reconditioned to “like new” condition. Apply form coating to forms in accordance with the manufacturer’s specifications. Apply form coating to forms before placing reinforcing steel.

N. Inspection: Before placing of concrete, and after placement of reinforcing steel in the forms, provide notification so that proper inspection can be made. Make such notification at least 2 working days in advance of placing concrete.

O. Rejection of Defective Work: Any movement or bellying of forms during construction or variations in excess of the tolerances specified will be considered just cause for the removal of such forms and, in addition, the concrete construction so affected. Reconstruct forms, place new concrete and required reinforcing steel at no additional cost to the Owner.

3.03 REMOVAL OF FORMS:

A. Formwork for walls, sides of beams, and other parts not supporting the weight of the concrete may be removed as soon as the concrete has hardened sufficiently to resist damage from removal operations, particularly when form ties will be bent by the removal operations, but not sooner than 24 hours after placing concrete. Comply with Section 1906, CBC and ACI 318, Section 6.2.

B. Whenever the formwork is removed during the curing period, cure the exposed concrete by one of the methods specified in Section 03 3000.

END OF SECTION

SECTION 03 10 00

CONCRETE FORMWORK

PART 1 GENERAL

1.01 SUMMARY:

A. Section Includes: Furnishing, installing, and removing of forms for cast-in-place concrete.

B. Related Documents: The Conditions of the Contract and Division 1 apply to this section as fully as if repeated herein.

1.02 REFERENCES:

The editions of the specifications and standards reference herein, published by the following organizations, apply to the formwork only to the extent specified by the reference.

American Concrete Institute (ACI)
Corps of Engineers
U.S. Department of Commerce Product Standard (PS)
Western Wood Products Association (WWPA)
West Coast Lumber Inspection Bureau (WCLIB)

1.03 REGULATORY REQUIREMENTS:

Except as modified by the requirements specified herein or the details on the drawings, formwork shall conform to the California Building Code (CBC), Chapter 19.

PART 2 PRODUCTS

2.01 MATERIALS:

A. Forms for Unexposed Concrete: Form concrete surfaces which will not be exposed in the finished structure with plywood, lumber, metal or other acceptable material.

1. Lumber: Standard or better grade Douglas fir, meeting the requirements of WCLIB "Standard Grading Rules #16, 1984 Edition or WWPA "Western Lumber Grading Rules 88". Use boards which are surfaced on at least 2 edges and one side for a tight fit.

2. Plywood: B-B Plyform, Class I, Exterior grade meeting the requirements of PS 1-83, 5/8 inch minimum thickness for 12 inch stud spacing and 3/4 inch minimum thickness for 16 inch stud spacing.

B. Forms for Exposed Finish Concrete: Construct formwork for exposed concrete surfaces with plywood, metal, metal-framed plywood faced or other acceptable panel-type materials, to provide continuous, straight, smooth, exposed surfaces. Furnish in largest practical sizes to minimize number of joints. Provide form material with sufficient thickness to withstand pressure of newly placed concrete without bow or deflection.

1. Where an as cast surface finish is indicated, provide High Density Overlay Plyform Class I Exterior plywood meeting the requirements of PS 1-95.

2. Where sacked, rubbed or sandblasted surface finish is indicated, provide B-B Plyform Class I Exterior plywood meeting the requirements of PS 1-95.

C. Framing, Studding and Bracing: "Standard" or "Construction" grade Douglas fir, rough or S4S, meeting the requirements of the WCLIB "Standard Grading Rules No. 16" or WWPA "Western Lumber Grading Rules 88".

D. Form Ties and Spreaders: Standard metal form clamp assembly, of type acting as spreaders and leaving no metal within 1 inch of concrete face. Inner tie rod shall be left in concrete when forms are removed. Wire ties or wood spreaders will not be permitted.

E. Form Coating: Nongrain raising and nonstaining type that will not leave residual matter on surface of concrete or adversely affect proper bonding of subsequent application of other material applied to concrete surface. Coatings containing mineral oils or other nondrying ingredients will not be permitted. Form coating for use with form liners shall be of type recommended by form liner manufacturer.

F. Nails: Common wire, steel.

PART 3 EXECUTION

3.01 DESIGN OF FORMWORK:

A. Carry out the engineering and construction of all formwork, shoring and bracing, by and under the direction of the Contractor. The Contractor shall be held responsible for the engineering, construction, maintenance, and safety of all formwork during the entire construction period.

B. The formwork shall be designed for the loads and lateral pressures outlined in Part 3, Section 102, of ACI 347, and lateral forces as specified by the CBC.

3.02 CONSTRUCTION:

A. Earth Forms: Earth forms may be used for footings only where the soil is firm and stable and the concrete will not be exposed to view. Where earth forms are to be used, excavations shall be cut neat and accurately to size for placing of concrete directly against the excavation. Except for bottom of footings, allow for one inch additional concrete beyond the dimensions or profiles shown on the drawings. Construct wood edge strips at each side of trench at top to secure reinforcing and prevent trench from sloughing. Form sides of footings where earth sloughs more than six inches. Earth forms shall be tamped firm and cleaned of all debris and loose material before depositing concrete.

B. Wood forms: Construct forms of sound material to the correct shape and dimensions, mortar tight, and of sufficient strength, and so braced and tied together that the movement of men, equipment, materials, or placing and vibrating the concrete will not throw them out of exact shape under imposed loads. They shall be so constructed that they may be easily removed without damage to the concrete. Before concrete is placed in forms, carefully verify the horizontal and vertical position of the form and correct inaccuracies. Complete wedging and bracing in advance of placing of concrete.

C. Form Liners: Position liners on the forms so that grooves and joints are aligned with tie slots. Attach form liners to plywood forms with staples and to metal forms with sheet metal screws or pop rivets. Space fasteners not to exceed 4 inches on centers around the perimeter of each

sheet. Place staples perpendicular to the edges. Install staples using a power staple with pressure regulated so that staple heads are driven flush with the surface. Seal joints between liners and joints at top and bottoms of liners with foam tape placed on the back side of liners.

D. Framing bracing, supporting members, and centering shall be of ample size and strength to safely carry, without deflection, dead and live loads to which forms may be subjected, and shall be spaced sufficiently close to prevent bulging or sagging of forms. Concrete out of line, level, or plumb will be cause for rejection of the whole construction affected.

E. Tolerances: Formwork shall be constructed so as to ensure that the concrete surfaces will conform to the tolerances of Section 203.1, ACI 347. Camber formwork where necessary to compensate for anticipated deflections due to fresh concrete and construction loads.

F. Chamfered Corners: Chamfer exposed corners 3/4 inch, unless otherwise indicated. Provide molding in forms for all chamfering required.

G. Form Ties: Use ties of sufficient strength and in sufficient quantities to prevent spreading of the forms. Place ties at least 1 inch away from the finished surface of the concrete.

H. Arrangement: Arrange formwork to allow proper erection sequence and to permit form removal without damage to concrete.

I. Joints: Install construction joints, isolation joints, shrinkage control joints and expansion joints as approved. Coordinate location of construction joints, particularly those exposed to view to walls and columns, in advance of concrete placement.

J. Embedded Piping and Rough Hardware:

1. Coordinate with other trades who are required to fasten materials to formwork, or who are required to insert piping, boxes, bolts, anchors, inserts, or other rough hardware, within the forms.

2. Locate conduits or pipes so as not to reduce the strength of the construction, and in no case place in a slab less than 4 inches thick except for local offsets. Do not bury conduit in a concrete slab with an outside diameter greater than 30 percent of the thickness of the slab, and do not place conduit under slab reinforcing steel, except for slab mesh.

K. Frame openings in slabs for floor hinges where indicated or scheduled. Accurately frame openings to template furnished by floor hinge manufacturer for type of floor hinge specified. Chipping of concrete floors for installation of floor hinges will not be permitted.

L. Waterstops: Install waterstops to form a continuous diaphragm at each joint. Make provisions to support and protect exposed waterstops during progress of construction. Fabricate field joints in waterstops in accordance with manufacturer's printed instructions.

M. Coating of Forms: Thoroughly clean forms and coat with specified form coating before each use. Do not reuse forms for exposed construction which cannot be reconditioned to “like new” condition. Apply form coating to forms in accordance with the manufacturer’s specifications. Apply form coating to forms before placing reinforcing steel.

N. Inspection: Before placing of concrete, and after placement of reinforcing steel in the forms, provide notification so that proper inspection can be made. Make such notification at least 2 working days in advance of placing concrete.

O. Rejection of Defective Work: Any movement or bellying of forms during construction or variations in excess of the tolerances specified will be considered just cause for the removal of such forms and, in addition, the concrete construction so affected. Reconstruct forms, place new concrete and required reinforcing steel at no additional cost to the Owner.

3.03 REMOVAL OF FORMS:

A. Formwork for walls, sides of beams, and other parts not supporting the weight of the concrete may be removed as soon as the concrete has hardened sufficiently to resist damage from removal operations, particularly when form ties will be bent by the removal operations, but not sooner than 24 hours after placing concrete. Comply with Section 1906, CBC and ACI 318, Section 6.2.

B. Whenever the formwork is removed during the curing period, cure the exposed concrete by one of the methods specified in Section 03 3000.

END OF SECTION

SECTION 03 20 00

CONCRETE REINFORCEMENT

PART 1 GENERAL

1.01 SUMMARY:

A. This section includes the furnishing and installing of reinforcing steel for cast-in-place concrete as indicated and specified. The Conditions of the Contract and Division 1 apply to this section as fully as if repeated herein.

1.02 REFERENCES:

A. The editions of the specifications and standards referenced herein, published by the following organizations, apply to the concrete reinforcement only to the extent specified by the reference.

American Concrete Institute (ACI)
American Society for Testing and Materials (ASTM)
Concrete Reinforcing Steel Institute (CRSI)
American Welding Society (AWS)

1.03 SUBMITTALS:

A. Product Data: Submit mill affidavits, stating the grades and physical and chemical properties of the reinforcing steel, and conformance with ASTM Specifications, before delivery of the steel to the project site.

B. Shop Drawings:

1. Placement drawings shall show the size, locations, and spacing of reinforcing in the various parts of the structure. Placement drawings shall be complete so that placement of the reinforcing may proceed without reference to the design drawings.

2. Review shall not act to relieve the Contractor from responsibility for accuracy of the fabrication details and placing diagrams. Dimensions and locations shall be verified before the preparation of shop drawings.

3. No construction shall be done except from reviewed drawings which shall be kept at all project site.

1.04 REGULATORY REQUIREMENTS:

A. Except as modified by the requirements specified herein or the details indicated, concrete reinforcing shall conform to the California Building Code, Chapter 19.

1.05 DELIVERY, STORAGE, AND HANDLING:

A. Delivery: Deliver reinforcement bundled and tagged to identify placement and certify testing.

B. Reinforcing steel shall be transported to the construction site, stored and covered in a manner which will insure that no damage occurs to it from moisture, dirt, grease, or other cause that might impair bond to concrete. Store a sufficient supply of approved reinforcing steel on the

construction site at all times to insure that there will be no delay of the construction. Maintain identification of steel after bundles are broken.

1.06 COORDINATION:

A. Review architectural, structural, mechanical, and electrical drawings for anchor bolt schedules and locations, anchors, inserts, conduits, sleeves, and other items which are required to be cast in concrete, and make necessary provisions as required so that reinforcing steel will not interfere with the placement of such embedded items.

PART 2 PRODUCTS

2.01 MATERIALS:

A. Reinforcing Bars: New, deformed, billet steel bars, meeting the requirements of ASTM A 615, Grade 40 for No. 3, Grade 60 for all others. Welded reinforcing shall comply with ASTM A706. Deliver bars new and free from rust and mill scale in original bundles with mill tags intact. The carbon equivalent (C.E.) of reinforcing bars or splice material shall be calculated from the chemical composition as shown in the mill report by the following formula:

$$C.E. = \%C + \%Mn/6 + \%Cu/40 + \%Ni/20 + \%Cr/10 - \%Mo/50 - \%V/10$$

If mill test reports are not available, chemical analysis shall be made of bars representative of the bars to be welded. ASTM A 706 bars may be assumed to have a C.E. = 0.55. No welds should be made at bends in reinforcing bars.

B. Welded Wire Fabric: New welded steel wire fabric, meeting the requirements of ASTM A 185. Gage and center-to-center spacing shall be as indicated.

C. Accessories: Reinforcement accessories, consisting of spacers, chairs, ties, and similar items shall be provided as required for spacing, assembling, and supporting reinforcement in place. Accessories shall be galvanized steel or approved plastic accessories, conforming to the applicable requirements of the CRSI "Manual of Standard Practice".

D. Tie Wire: Tie wire for reinforcement shall be 16 gage or heavier, where indicated or specified, black or galvanized steel wire, meeting the requirements of ASTM A 82.

E. Welding Electrodes: AWS A5.1, Grade E70XX for welding A706 bars. Weld only A706 bars.

PART 3 EXECUTION

3.01 FABRICATION:

A. Fabrication of steel reinforcement shall be in accordance with the details indicated. Where specific details are not indicated or noted, comply with the applicable requirements of CBC and ACI 315.

B. Bars shall be accurately bent, cut, and placed as indicated. Bars shall be bent cold; heating of bars will not be permitted. Bars shall not be bent or straightened in any manner that will injure the material.

3.02 PLACING:

A. General: Reinforcing steel shall be placed in accordance with the drawings and the applicable of the latest edition of the CRSI "Manual of Standard Practice". Install reinforcement accurately and secure against movement, particularly under the weight of workmen and placement of concrete.

B. Reinforcing Supports: Bars and welded wire fabric larger than 8 gage shall be supported by metal chairs or spacers on metal hangers, accurately placed and securely fastened to steel reinforcement in place. Support legs of accessories in forms without embedding in form surface. Spacing chairs and accessories in conformance with CRSI's "Recommended Practice for Placing Bar Supports". No wood will be permitted inside forms. Precast concrete cubes may be used to support footings and slabs on grade reinforcing.

C. Placing and Tying: Reinforcing shall be set in place, spaced, and securely tied or wired with 16 gage steel tie wire at splices and at crossing points and intersections in the position indicated, or as directed. Point ends of wire away from forms.

D. Spacing: Bars shall be spaced as indicated. Where not indicated, the clear spacing for main longitudinal column reinforcement shall be not less than 1.5 times the nominal bar diameter, or 1½ inches, or 1-1/3 times the maximum size aggregate, whichever is greater. For other parallel bars, where spacing is not indicated, the minimum clear spacing shall not be less than the nominal bar diameter, or one inch, or 1-1/3 times the maximum size aggregate, whichever is less. The clear distance limitations above also apply between the bars being spliced at a contact lap splice and adjacent bars.

E. Splices: Except for temperature bars in slabs and horizontal wall reinforcing no splicing will be allowed for reinforcing bars unless detailed locations are indicated, or approval is given. Stagger lapped splices for horizontal wall reinforcing and slab temperature bars by the required minimum lap splice length. Wherever possible, stagger splices of adjacent bars.

F. Welded Wire Fabric: Wire fabric shall be in as long lengths as practical and shall be wired at laps and splices. Laps shall be one full spacing of the cross wires plus 2 inches at splices. Supply welded wire fabric in flat sheets.

G. Dowels: Dowels shall be tied securely in place before concrete is deposited. In the event there are no bars in position to which dowels may be tied, No. 3 minimum shall be added to provide proper support and anchorage. Bending of dowels after placement of concrete will not be permitted unless approval is obtained. Dowels extended for future construction shall be protected from weather exposure as indicted. Compliance with safety law requirements for extended dowel is required.

H. Cleaning: Reinforcement, at time of pour, shall be free of coatings that would impair bond to concrete.

I. Welding: Welding of reinforcing steel shall comply with CBC Edition 2007 chapter 17 and 19, AWS D12.1. Weld only reinforcing steel which conforms to ASTM A706. The carbon equivalent shall not exceed 0.55.

3.03 FIELD QUALITY CONTROL:

A. Provide notification at least 2 working days ahead of each concrete pour. No concrete shall be placed until all reinforcing steel has been installed and reviewed. All reinforcing shall be complete in every way by the end of the working day before concrete placing. Testing and inspections are specified in Section 01 45 00.

3.04 DEFECTIVE WORK:

A. The following reinforcing steel construction will be considered defective and shall be removed and replaced at no additional cost to the Owner.

Bars with kinks or bends not indicated.

Bars damaged by bending or straightening.

Bars heated for bending.

Reinforcement not placed in accordance with the drawings or specifications.

END OF SECTION

SECTION 03 30 00

CAST-IN-PLACE CONCRETE

PART 1 GENERAL

1.01 SUMMARY:

A. Section Includes: Cast-in-place concrete for the following:

1. Foundations and footings
2. Grade beams
3. Building slabs-on-grade
4. Fill for steel deck
5. Floor and roof slabs
6. Equipment pads and bases
7. Fill for steel pan stairs

B. Related Documents

1. Section 01 3515: LEED Certification Procedures

2. Section 32 1313: Concrete for sidewalks, and other exterior concrete paving work.

3. Section 03 1000: Concrete formwork including waterstops and expansion joint fillers.

4. Section 03 2000: Concrete reinforcement

1.02 REFERENCES:

A. Refer also to Structural drawings.

ACI 318 - Building Code Requirements for Reinforced Concrete

ASTM C 33 - Concrete Aggregates

ASTM C 94 - Ready-Mixed Concrete

ASTM C 114 - Chemical Analysis of Hydraulic Cement

ASTM C 156 - Water Retention by Concrete Curing Materials

ASTM C 171 - Sheet Materials for Curing Concrete

ASTM C 227 - Potential Alkali Reactivity of Cement-Aggregate Combinations (Mortar-Bar Method)

ASTM C 260 - Air-Entraining Admixtures for Concrete

ASTM C 309 - Liquid Membrane-Forming Compounds for Curing Concrete

ASTM C 330 - Lightweight Aggregates for Structural Concrete

ASTM C 494 - Chemical Admixtures for Concrete

ASTM C 567 - Unit Weight of Structural Concrete

ASTM C 618 - Fly Ash and Raw or Calcined Natural Pozzolan for Use as a Mineral Admixture in Portland Cement Concrete

ASTM C 1017-92 - Chemical Admixtures for Use in Producing Flowing Concrete

ASTM C 1107 - Packaged Dry, Hydraulic-Cement Grout (Nonshrink)

ASTM C 1116 - Fiber-Reinforced Concrete and Shotcrete

ASTM D 1751 - Preformed Expansion Joint Filler for Concrete Paving and Structural Construction (Nonextruding and Resilient Bituminous Types)

ASTM D 4397 - Polyethylene Sheeting for Construction, Industrial, and Agricultural Applications

1.03 SUBMITTALS:

A. Product Data:

1. Submit certificates of compliance for portland cement.

2. Submit manufacturers technical literature for admixtures, curing compounds, expansion joint filler, sealer and chemical hardener.

B. LEED Report: Submit report documenting percentage of recycled content replacing Portland cement.

1.04 QUALITY ASSURANCE:

A. Regulatory Requirements: Except as modified by the requirements specified herein or the details indicated, concrete construction shall conform to California Building Code, Chapter 19.

PART 2 PRODUCTS

2.01 MATERIALS:

A. Portland Cement:

1. Cement shall conform to ASTM C150, Type II. The cement used in the work shall correspond to that on which the selection of concrete proportions was based.

2. Where aggregates contain reactive substances, low alkali cement shall be used in all concrete. Low alkali cement shall not contain more than 0.6 percent total alkali when calculated as sodium oxide as determined by the method given in ASTM C 114.

B. Pozzolan: ASTM C 618, Type F or C. Limit use of pozzolan to not more than 15 percent of cement content by weight.

C. Regular Weight Concrete Aggregates: ASTM C33. Use ASTM C 227 to determine alkali reactivity of the aggregates as specified therein, the alkali reactivity shall be "innocuous" as determined by ASTM C 289.

1. Fine Aggregate: Washed clean, uniformly screen graded, and containing not more than 2 percent by weight of deleterious materials such as shale, schist, alkali, clay lumps, earth, loam, mica or similar materials. Uniformly grade fine aggregate from fine to coarse.

2. Coarse Aggregate: Clean, hard, crushed rock or washed gravel, free from organic materials or soft or friable materials, containing not more than 2 percent by weight of shale or cherty material and not more than 15 percent by weight of elongated fragments.

D. Lightweight Concrete Aggregates: ASTM C 330.

E. Admixtures: Type that increases workability and reduces water demand of concrete, but will not increase shrinkage. Admixture shall be subject to acceptance by the Architect and Division of the State Architect as to type and amount used. Admixtures shall contain not more than one percent chloride ions.

1. Water Reducing Admixture: ASTM C 494, Type A. Acceptable products include, but are not limited to, the following:

   Cormix, Inc.; PSI N
   Euclid Chemical Co.; Eucon WR 75
   W.R. Grace & Co.; WRDA
   Master Builders, Inc.; Pozzolith Normal
   Sika Corp.; Plastocrete 161

2. Air-Entraining Agent: ASTM C 260. Acceptable products include, but are not limited to, the following:

   Cormix, Inc.; Air-Tite
   Euclid Chemical Co.; Air-Mix
   W.R. Grace & Co.; Darex AEA
   Master Builders, Inc.; MB-VR
   Sika Corp.; AER

F. Water Used in Mixing Concrete: Potable, clean and free from deleterious amounts of acid, alkalis, organic or other materials.

G. Curing Membrane: Nonstaining paper meeting the requirements of ASTM C 171, or 6 mil thick polyethylene film.

H. Curing Compound: Types as follows subject to the limitations specified elsewhere in this Section:

1. Non-film Forming Type: Clear, water-based solution that penetrates below the concrete surface to react with free lime to seal, harden and dust proof concrete surfaces. When tested in accordance with ASTM C 156, compound shall restrict the loss of water to not more than 0.55 kg per square meter. Acceptable products include, but are not limited to, the following:

   Burke Corp.; Res-X Silicate
   Dayton-Superior; Day-Chem Sil-Cure (J13)
   Euclid Chemical Co.; Cure & Hard
   W. R. Meadows; Cure Hard
   Nox-Crete, Inc.; Bro-Cure
   Sonneborn Building Products; Sonosil

I. Vapor Barrier

1. 10 mil polyethylene meeting the requirements of ASTM D 4397.

2. Kraft paper, glass reinforming fibers and layers of polyethylene laminated under heat and pressure to form a single layer sheet complying with FS UU-B-790, Type I, Grade A, Style 4; or waterproof paper, regular, conforming to ASTM C 171, consisting of two sheets of kraft paper cemented together with bituminous material in which are embedded cords or strands of fiber running in both directions not more than 1- 1/4 inch apart. Acceptable product includes, but is not limited to, the following:

   Fortafiber Corp.; "Moistop"

3. Vapor barrier shall be a premolded seven ply membrane consisting of a reinforced core and carrier sheet with fortified bitumen layers, protective weathercoating, and plastic antistick sheet. Membrane shall have a water vapor transmission rate of 0.00 grains per sq. ft. per hour when tested in accordance with ASTM E 96, Method B. Vapor barrier shall be as follows or equal approved in accordance with Section 01 60 00:

   W. R. Meadows, Inc.; "Sealtight Vapor Seal with Plasmatic Core"

J. Sand for Use With Vapor Barrier Under Concrete: Washed fine aggregate meeting the requirements of ASTM C 33.

K. Abrasive Aggregate: Factory graded and packaged fused aluminum oxide grits or crushed emery containing not less than 40 percent aluminum oxide and not less than 25 percent ferric oxide. Material shall be rust-proof, nonglazing and unaffected by freezing, moisture and cleaning materials.

L. Leveling Compound: Cementitious, single component, non-shrink, self-leveling underlayment for concrete floors. Compound shall be as follows or equal approved in accordance with Section 01 60 00:

   Ardex; V-800
   Burke Corp.; Flo-Tru
   Dayton-Superior; LeveLayer II
   Euclid Chemical Co.; Flo-Top
   Symons Corp.; Floor Top
   Sonneborn Building Products; Sonoflow

M. Drilled Anchors: Anchors shall be as follows or equal approved in accordance with Section 01 6300:

Hilti Kwik-Bolt KB-TZ (ICC Report No. ESR-1917)

2.02 MIXES:

A. Concrete Proportions and Properties:

1. Minimum Concrete Strengths at 28 Days: As indicated, or 3000 psi, minimum, at 28 days where not indicated.

2. Maximum Slumps: 3-1/2 inches for toppings on metal deck, 4 inches for slabs, footings and other horizontal members, 5 inches for walls, columns and other vertical members.

3. Maximum Size Aggregate: In no case shall the maximum aggregate size used exceed one fifth of a member's thickness, one third of the depth of slabs, nor three fourths of the minimum clear spacing between individual reinforcing bars or bundles of bars. In columns and piers it shall not exceed 2/3 of the clear distance between reinforcement. In addition, it shall never exceed the size indicated for the following:

(a) Slabs 6" and less in thickness: 11/2 inch.

(b) Walls less than 8" in thickness: 1 inch.

(c) Toppings over Steel Pan Stair Systems, Precast Tees, and Metal Deck: 3/8 inch.

(d) Other members: 1-1/2 inch.

4. Lightweight Structural Concrete: Maximum air-dry density as indicated. Use lightweight coarse aggregates. When the density requirements can be attained by the full or partial use of natural fine aggregates, such fine aggregate shall be used. Limit shrinkage to 0.03 percent at 28 days.

5. Admixtures: Admixtures shall be added in accordance with the manufacturer's instruction.

(a) Use water reducing admixture in concrete mix for all concrete.

(b) Air entraining admixture may be used, at the Contractor's option, to improve workability of low slump concrete mixes.

(c) Integrally Colored Concrete: Add color admixture at rate required to achieve color selected, where integrally colored concrete is indicated or specified.

B. Mixing:

1. Use ready mixed concrete, mixed and transported in accordance with ASTM C 94.

2. Retempering: Mix concrete only in quantities for immediate use. Discard concrete which has set, do not retemper.

3. Indiscriminate addition of water to increase slump is prohibited. When concrete arrives at the project with slump below that suitable for placing, water may be added only if neither the maximum permissible water-cement ratio nor the maximum slump is exceeded. Incorporate the water by additional mixing equal to at least half of the total mixing required. Accompany addition of water above that permitted by the limitation of water-cement ratio by a quantity of cement sufficient to maintain the proper water-cement ratio. Obtain approval.

4. Integrally Colored Concrete: Before placing colored admixture in the mixer, clean the drum thoroughly, and add approximately 40 gallons of mix water and a portion of the aggregate.

5. In the event concrete is mixed at a central batching plant, the delivery shall be arranged so that intervals between batches are kept at a minimum, and in any event not more than 30 minutes. Trucks shall be in first class condition and kept in constant rotation during delivery. No water shall be added during transit or at the job without specific instructions from the civil engineer responsible for the mix design. Concrete shall be placed within 90 minutes after addition of water and admixtures.

2.03 SOURCE QUALITY CONTROL:

A. General: Submit mill tests and manufacturer's certification of compliance with ASTM Specifications to the Inspector in lieu of testing of cement and aggregate analysis.

B. Mix Designs:

1. Mix designs shall be made by the Testing Laboratory of record under the supervision of a California Registered Civil Engineer, who shall determine mix proportions to fulfill the specified requirements for strength, aggregate size and workability of concrete, and such designs shall be used in proportioning all structural concrete. Mix designs shall bear the signature and seal of the California Registered Engineer. Two copies of the mix designs shall be filed with the Architect for record purposes only, not for review or approval.

2. Make mix designs in accordance with ACI 318 and CBC Section 1905.3.

3. Cover and clear distances between reinforcing bars shown on the drawings shall be considered in determining the aggregate size for mix designs, which may result in an aggregate size smaller than the maximum aggregate size stipulated elsewhere in this specification.

4. A list specifying the intended usage of each mix design shall be clearly shown as part of the designs.

PART 3 EXECUTION

3.01 CONVEYING AND PLACING CONCRETE:

A. Notify the Inspector at least 5 working days in advance of the placing of any concrete.

B. Soil bottoms for footings and slabs shall be inspected by the Geotechnical Engineer before placing concrete.

C. Before placing concrete, forms shall be thoroughly inspected. Remove wood chips, dirt, etc; take out temporary bracing and cleats; box openings for pipes, etc; secure forms in their correct position and make tight; and secure reinforcement, anchors, and embedded items in their proper places. Anchor bolts, dowels, and inserts shall be secured in place at least 24 hours prior to placement of concrete. Concrete which may be on the forms or reinforcement, and which is set and dry, shall be cleaned off and the forms and steel washed off before proceeding. Remove water and all foreign matter from forms and excavations.

D. Subgrade Preparation: Before concrete floor slabs on grade are poured, place vapor barrier over prepared subgrade, lapping all joints not less than 4 inches. Seal all joints and punctures in vapor barriers with pressure sensitive tape. Cover vapor barrier with a 2 inch thick layer of sand.

E. Surface Preparation: Before new concrete is deposited against hardened concrete, and before masonry is placed on concrete, remove all incrustation and laitance from forms, reinforcing, and surface of hardened concrete. If the surface mortar and laitance of the first concrete pour has not been completely removed by water blasting, the hardened concrete surface shall receive a sandblast treatment exposing the coarse aggregate, to 1/4 inch amplitude. Surfaces which are to receive drypack shall also be prepared as herein specified.

F. Handling and Depositing:

1. Concreting, once started, shall be carried on as a continuous operation until the section of approved size and shape is completed.

2. Handle concrete as rapidly as practicable from the mixer to the place of final deposit by methods which prevent the separation or loss of ingredients. Deposit concrete as neatly as practicable, in its final position to avoid rehandling or flowing. Do not use vibrators to move concrete.

3. Concrete shall not be dropped freely where reinforcing will cause segregation, nor shall it be dropped freely more than 4 feet. Concrete shall be deposited to maintain a plastic surface approximately horizontal.

4. Do not deposit concrete that has partially hardened in the work. Concrete shall not be retempered nor used after having stood 15 minutes after leaving the truck or mixer.

G. Vibrating and Compacting:

1. Thoroughly consolidate all concrete and compact by suitable means during the operation of placing and depositing. Thoroughly work all concrete around reinforcement, embedded items, and into the corners of the forms. Concrete against forms shall be thoroughly vibrated. Use internal vibrators under experienced supervision and keep out of contact with reinforcement and wood forms.

2. Vibrate close to the forms but do not continue at one spot to the extent that large areas of grout are formed or the heavier aggregates are caused to settle. Take care not to disturb concrete which has taken its initial set.

H. Flatwork:

1. Set edge forms and intermediate screed strips accurately to produce the designed elevations and contours in the finished surface, and sufficiently strong to support vibrating bridge screeds or roller pipe screeds if the nature of the finish specified requires the use of such equipment. Align concrete surface to the contours of screed strips by the use of strike-off templates or approved compacting type screeds.

2. When the formwork is cambered, set screeds to a like camber to maintain the proper concrete thickness.

3. Locate and detail joints in slabs on grade as indicated.

4. Thoroughly consolidate concrete slabs. Use internal vibration along the bulkheads of slabs on grade. Obtain consolidation of slabs and floors with vibrating bridge screeds, roller pipe screeds, or other approved means. Concrete to be consolidated shall be as dry as practical and the surfaces thereof shall not be manipulated before the finishing operations.

3.02 CONSTRUCTION JOINTS:

A. Construction joints shall be made and located as indicated and detailed on the drawings.

3.03 TEMPERATURE REQUIREMENTS:

A. Cold Weather Requirements:

1. Concrete shall not be mixed or placed when the temperature is below 40 degrees F or when conditions indicate that the temperature will fall below 40 degrees F within 72 hours.

2. Concrete temperature shall be maintained, when deposited at not less than 50 degrees F. In cold weather, the reinforcement, forms, and ground which concrete will contact must be completely free of frost.

3. The concrete and formwork must be kept at a temperature of not less than 50 degrees F for not less than 72 hours after placing. Maintain concrete above 50 degrees F and in a moist condition for a minimum of 7 days after placing unless otherwise accepted by the S.E.

B. Hot Weather Requirements: The maximum placing temperature of the concrete, when deposited, shall not exceed 90 degrees F without the use of special procedures. If the weather causes the placing temperature to exceed 90 degrees F, the mix shall be cooled by wetting the aggregate or other appropriate method as directed by the Architect.

3.04 REPAIR OF SURFACE DEFECTS:

A. Any concrete which is not formed as shown on the drawings, or for any reason is out of alignment, or is not true, or is not plumb or level, or is not in plane, or shows a defective surface, or is otherwise not in true and continuous form or is structurally defective, shall be considered as not conforming with the intent of this specification.

B. Contractor shall remove such concrete from the job and replace with new concrete, at no extra cost to the District. Removal shall be accomplished by saw cutting around the defective area at the nearest construction joint.

C. Patching Appearance Defects:

1. Inspection: After removing entire formwork assemblies, inspect concrete surfaces and patch tie holes, pour joints, voids, stone pockets, and such other defective areas as are permitted by Architect to be patched.

2. Procedure: Where necessary, chip away defective areas to depth of not less than 1 inch with edges perpendicular to surface, with no feather edges. Wet area to be patched and a space at least 6 inches wide entirely surrounding it, to prevent absorption of water from patching mortar. Place grout of equal parts portland cement and sand with sufficient water to produce a brushing consistency. Brush well into surface, then follow immediately with patching mortar.

3. Use patching mortar of same material and of approximately same proportions as used for concrete, except omit coarse aggregate, and do not mix richer than 1 part cement to 3 parts sand. Use as little mixing water as is consistent with requirements of handling and placing.

4. Compact mortar into place and screed off so as to leave patch slightly higher than surrounding surface. Then leave patch undisturbed for a period of 1 to 2 hours to permit initial shrinkage before being finally finished. Finish the patch in such a manner as to match adjoining surface, after striking off the patch with a straightedge spanning the patch and held parallel to direction of form marks.

3.05 CONCRETE FINISHES FOR FORMED SURFACES:

A. Class A Finishes: Provide sacked, rubbed, and abrasive blasted finishes where specifically indicated on the Drawings.

1. Sack Rubbed Finish: Remove fins, rough spots, stains and hardened mortar by carefully rubbing with a fine abrasive stone to a smooth even surface. Remove excess form sealer by carefully scrubbing surface with 5 to 10 percent solution of muriatic acid. Fill holes or irregular surfaces. Apply a slurry proportioned one part cement to 1-1/2 parts sand, passing a No. 16 sieve, by damp loose volume, mixed with sufficient water to form a grout having the consistency of thick paint. Before applying slurry to surfaces, dampen concrete sufficiently to prevent water absorption. Spread slurry over surfaces with a clean sponge rubber float to completely fill holes and imperfections. Float surface vigorously, and while slurry is still plastic remove excess grout. Allow to dry then rub with burlap to completely remove dry grout so that no visible grout film remains. Complete the entire cleaning operation for any area the day it is started.

2. Smooth Rubbed Finish: Not later than one day after form removal, moisten concrete surfaces and rub with carborundum brick or other abrasive until a uniform color and texture is produced. Do not apply cement grout other than the cement paste drawn from the concrete by the rubbing process.

B. Class B Finish: Provide for exposed concrete surfaces where specifically indicated on the Drawings. Completely remove all fins and patch all tie holes and defects. Provide smooth form as-cast finish with texture as imparted by the form materials specified in Section 03 1000 for this class of finish. Surface irregularities in the finished concrete surface shall not exceed the limits specified for Class B finish in ACI 347R, Table 3.4.

C. Class C Finish: Provide for all exposed concrete surfaces except where Class A or B finish is indicated on the Drawings. Completely remove all fins and patch all tie holes and defects. Provide smooth form as-cast finish with texture as imparted by the form materials specified in Section 03 1000 for this class of finish. Irregularities in the finished concrete surface shall not exceed the limits specified for Class C finish in ACI 347R, Table 3.4.

D. Class D Finish: Provide for all concealed concrete surfaces. Chip or rub off fins exceeding 1/4 inch in height. Patch all tie holes and defects. Provide rough form as-cast finish as imparted by the form materials specified in Section 03 1000 for this class of finish. Irregularities in the finished concrete surface shall not exceed the limits specified for Class D finish in ACI 347R, Table 3.4.

3.06 FINISHES FOR FLATWORK:

A. Floated Finish: Provide floated finish for subfloors for ceramic and quarry tile. After concrete has been placed, struck off, consolidated and leveled, do not work concrete further until ready for floating. Begin floating when water sheen has disappeared, or when mix has stiffened sufficiently to permit proper operation of a power-driven float. Consolidate surface with power-driven floats of impact type. Hand float with wood or cork-faced floats in locations inaccessible to power-driven machine. Recheck trueness of surface at this stage with a 10 foot straight-edge applied at not less than two different angles. Cut down high spots and fill low spots during this procedure to produce planes checking true under the straightedge in all directions, with tolerances not exceeding 1/8 inch in 10 feet. Refloat slab immediately to a uniform, smooth, granular texture.

1. Tolerances for floors indicated to receive thin set ceramic tile applications shall not exceed 1/8 inch in 12 feet.

2. Tolerances for all other floors shall not exceed 1/4 inch in 12 feet.

3. Finish floors that do not meet specified tolerances shall be leveled to within the specified tolerances using a leveling compound.

B. Troweled Finish: Provide troweled finish for interior concrete finish floors and subfloors for resilient flooring and carpet. Finish surface with impact power floats, as specified above where applicable, then with power trowels, and finally with hand trowels. Perform first troweling after power floating with a power trowel to produce a smooth surface which is relatively free of defects but which may still contain some trowel marks. Perform additional trowelings by hand after surface has hardened sufficiently. Perform final troweling when a ringing sound is produced as trowel is moved over surface. Thoroughly consolidate surface by hand troweling operations. Finished surface shall be free of trowel marks and shall be uniform in texture and appearance. On surfaces intended to support floor covering, remove by grinding, defects of sufficient magnitude to show through floor covering. Particular care shall be taken to finish troweling around the edges of the slabs so finish surface edges shall be at same elevations as the rest of the top surface of the slab.

C. Edge and Joint Finish: Use standard tools to produce rounded edge corners and intermediate line scoring.

D. Concrete Sealer: All concrete floors not indicated in the schedule to receive other finish shall receive two coats of sealer specified herein. Spray apply in perpendicular directions. First coat shall be applied as a curing compound. Apply final coat just prior to occupation of buildings. Before applying final coat, remove dirt, dust, oil, grease, asphalt and other foreign matter.

E. Abrasive Aggregate Finish: Provide abrasive aggregate at stair treads, ramps, and elsewhere as indicated. Soak aggregate for 10 minutes in clean water, drain off surplus water, sprinkle uniformly by hand at rate of 0.9 pounds per square foot of concrete surface. Wood float, trowel-tamp or roll into concrete.

3.07 PROTECTION AND CURING:

A. General: Protect freshly deposited concrete from premature drying and excessively hot or cold temperatures, and maintain without drying at a relatively constant temperature for the period of time necessary for the hydration of the cement and proper hardening of the concrete.

B. Initial Curing: Initial curing shall immediately follow the finishing operation. Keep concrete continuously moist at least overnight. Use one of the following materials or methods:

1. Continuous sprinkling or fogging.

2. Absorptive mat or fabric kept continuously wet.

3. Sand kept continuously wet.

4. Curing Compounds: Apply compounds in accordance with the recommendations of the manufacturer.

(a) On floors indicated to receive sealer, apply curing sealer.

(b) Where possible, do not use curing compounds on surfaces indicated to receive ceramic tile, bonded terrazzo, cementitious floor toppings, liquid or trowel applied flooring, adhesively applied resilient flooring or carpet, paint, anti-graffiti coatings, or similar products required to be adhered to the concrete surface. Where necessary, apply non-film forming compound, or dissipating resin compound. If dissipating resin type compound is used, concrete surfaces shall be tested to ensure complete dissipation before application of bonded materials. If residual compound is found, the residual compound shall be removed by sandblasting, bead blasting, or chemical scrubbing.

(c) On Surfaces indicated to receive a Class A or B finish, use clear, non-yellowing compound.

(d) On integrally colored concrete and dry shake colored toppings use pigmented curing compound.

(e) On all other concrete surfaces, use dissipating resin compound.

C. Cure surfaces to receive resilient flooring and ceramic tile by covering with waterproof paper coverings.

D. Final Curing: Immediately following the initial curing and before the concrete has dried, accomplish additional curing by one of the following materials or methods:

1. Continuing the method used in initial curing.

2. Waterproof paper covering.

3. Other moisture-retaining coverings as approved.

E. Duration of Curing: Continue the final curing until the cumulative number of days or fractions thereof, not necessarily consecutive, during which temperature of the air in contact with the concrete is below 50 degrees F has totaled 7 days. If high early strength of concrete has been used, continue the final curing for a total of 3 days. Rapid drying at the end of the curing period shall be prevented.

F. Formed Surfaces: Keep steel forms heated by the sun and all wood forms in contact with the concrete during the final curing period wet. If forms are to be removed during the curing period, immediately employ one of the above curing materials or methods. Continue such curing for the remainder of the curing period.

G. Protection from Mechanical Injury: During the curing period, protect the concrete from damaging mechanical disturbances, particularly load stresses, heavy shock, and excessive vibration. Protect finished concrete surfaces from damage caused by construction equipment, materials, or methods, and by rain or running water. Self-supporting structures shall not be loaded in such a way as to overstress the concrete.

3.08 EXPANSION AND CONSTRUCTION JOINTS:

A. Expansion Joints: Tool adjacent concrete edges to a 1/8 inch radius. After a minimum of 28 days after slabs have been placed and finished, fill tops of expansion joints with backer rod and sealant Type B as specified in Section 07 9005. Finish sealant to 1/8 inch below surface of slabs. No traffic shall be permitted to travel over sealed joints until sealer is thoroughly dry.
B. Construction Joints: When construction joints are necessary they shall be made and located as indicated.

3.09 DEFECTIVE WORK:

A. Defective concrete work shall be removed and replaced at Contractor's expense.

3.10 FIELD QUIALITY CONTROL

A. Level of floors: Continuously monitor concrete placing to maintain level floor by use of an instrument level, transit, or laser.
B. Special inspection: Construction structural concrete exceeding 2,000 psi compressive strength under continuous inspection of special inspector. Obtain inspection and approval of forms and reinforcing by Building Department as required and by the special inspector before placing structural concrete.
C. Testing of Concrete: Conform to CBC 2007, Section 1905. Testing Laboratory shall perform following tests. Samples for testing shall be obtained in accordance with ASTM C172, and shall be taken from as close to point of placement as possible.
   1. Compressive Strength Tests: Cast one set of three or more cylinders from each day's placing and each 50 cubic yards, or fraction thereof, or not less than once for each 2,000 square feet of surface area for slabs and walls, of each strength of structural concrete. Date cylinders, assign record number, and tag showing the location from which sample was taken. Also record slump test result of sample. Do not make more than two series of tests from any one location or batch of concrete.

2. Test Cylinders: Samples will be made in accordance with ASTM C172. Cast cylinders according to ASTM C31; 24 hours later, store cylinders under moist curing condition at about 70 degrees Fahrenheit. Test according to ASTM C39 at 7 and 28 day ages. The remaining cylinder shall be kept in reserve in case tests are unsatisfactory.
3. Control Test Cylinders: Cast a set of two or more cylinders for each day's placing of concrete for slabs supported on shoring. Place test cylinders on slabs represented by cylinders and cure the same as slabs. Test cylinders to determine proper times for removal of shores and reshoring. A strength test shall be the average of the compressive strengths of 2 cylinders made from the same sample of concrete and tested at 28 days.

D. Core Tests: If test show the compressive strength of any concrete falls below the required minimum, additional testing of concrete which unsatisfactory tests represent may be required. Make core tests according to ASTM C42. Fill core holes with drypack concrete of strength required for concrete. Contractor shall bear cost of tests for below-strength concrete even if such tests indicate concrete has attained required minimum compressive strength, and all costs for required corrections.

END OF SECTION

SECTION 03 53 00

CONCRETE TOPPING

PART 1 - GENERAL

1.1 RELATED DOCUMENTS

A. Drawings and general provisions of the Contract, including General Conditions, apply to this Section.

1.2 SUMMARY

A. Section Includes:

1. Concrete topping slab, curing materials and related materials

B. Related Sections:

1. Section 03 3000 Cast-in-Place Concrete
2. Section 07 1400 Fluid-applied Waterproofing.

1.3 ACTION SUBMITTALS

A. Product Data: For each type of product indicated.

1.4 INFORMATIONAL SUBMITTALS

A. Field quality-control test reports.

1.5 QUALITY ASSURANCE

A. Testing Agency Qualifications: An independent agency qualified according to ASTM C 1077 and ASTM E 329 for testing indicated.

B. Preinstallation Conference: Conduct conference at the project site.

1.6 DELIVERY, STORAGE, AND HANDLING

A. Deliver materials in original packages and containers, with seals unbroken, bearing manufacturer's labels indicating brand name and directions for storage, mixing with other components, and application.

B. Store materials to comply with manufacturer's written instructions to prevent deterioration from moisture or other detrimental effects.

1.7 PROJECT CONDITIONS

A. Environmental Limitations: Comply with manufacturer's written instructions for substrate temperature and moisture content, ambient temperature and humidity, ventilation, and other conditions affecting concrete floor topping performance.

1. Place concrete floor topping only when ambient temperature and temperature of base slabs are between 50 and 86 deg F (10 and 30 deg C).

B. Close areas to traffic during topping application and, after application, for time period recommended in writing by manufacturer.

PART 2 - PRODUCTS

2.1 CONCRETE TOPPING SLABS

A. Topping slab concrete shall have a minimum compressive strength at 28 days of 4,000 psi. Maximum size of aggregate shall be one inch, except that 3/8 inch maximum size aggregate shall be used for locations where conditions indicate a need for smaller aggregate. Minimum cement content per cubic yard of concrete shall be six and a half 94-pound sacks.

B. Mix design for topping-slab concrete shall include up to ten percent replacement of the cement content with fly ash (ASTM C618) along with a plasticizing admixture conforming with ASTM C1017, to provide a dense and plastic concrete mix which will trowel more easily with less surface bleeding of water.

2.2 CURING MATERIALS

A. Evaporation Retarder: Waterborne, monomolecular film forming; manufactured for application to fresh concrete.

B. Absorptive Cover: AASHTO M 182, Class 2, burlap cloth made from jute or kenaf, weighing approximately 9 oz./sq. yd. (305 g/sq. m) when dry.

C. Moisture-Retaining Cover: ASTM C 171, polyethylene film or white burlap-polyethylene sheet.

D. Water: Potable.

E. Clear, Waterborne, Membrane-Forming Curing Compound: ASTM C 309, Type 1, Class B, 25 percent solids content, minimum.

2.3 RELATED MATERIALS

A. Joint-Filler Strips: ASTM D 1751, asphalt-saturated cellulosic fiber or ASTM D 1752, cork or self-expanding cork.

B. Portland Cement: ASTM C 150, Type I or II.

C. Sand: ASTM C 404, fine aggregate passing No. 16 (1.18-mm) sieve.

D. Water: Potable.

E. Acrylic-Bonding Agent: ASTM C 1059, Type II, non-redispersible, acrylic emulsion or styrene butadiene.

PART 3 - EXECUTION

3.1 EXAMINATION

A. Examine substrates, with Installer present, for conditions affecting performance of concrete floor topping.

B. Verify that base concrete slabs comply with scratch finish requirements specified in Section 033000 "Cast-in-Place Concrete."

C. Verify that base slabs are visibly dry and free of moisture. Test for capillary moisture by the plastic sheet method according to ASTM D 4263.

D. Proceed with application only after unsatisfactory conditions have been corrected.

3.2 PREPARATION

A. Install joint-filler strips where topping abuts vertical surfaces, such as column pedestals, foundation walls, grade beams, and other locations, as indicated.

1. Extend joint-filler strips full width and depth of joint, terminating flush with topping surface, unless otherwise indicated.
2. Terminate full-width, joint-filler strips 1/2 inch (13 mm) below topping surface where joint sealants, specified in Section 079005 "Joint Sealants," are indicated.
3. Install joint-filler strips in lengths as long as practicable. Where more than one length is required, lace or clip sections together.

3.3 FLOOR TOPPING APPLICATION

A. Place concrete floor topping continuously in a single layer, tamping and consolidating to achieve tight contact with bonding surface. Do not permit cold joints or seams to develop within pour strip.

1. Screed surface with a straightedge and strike off to correct elevations.
2. Slope surfaces uniformly where indicated.
3. Begin initial floating using bull floats to form a uniform and open-textured surface plane free of humps or hollows.

B. Finishing: Consolidate surface with power-driven floats as soon as concrete floor topping can support equipment and operator. Restraighten, cut down high spots, and fill low spots. Repeat float passes and restraightening until concrete floor topping surface has a uniform, smooth, granular texture.

1. Hard Trowel Finish: After floating surface, apply first trowel finish and consolidate concrete floor topping by power-driven trowel without allowing blisters to develop. Continue troweling passes and restraighten until surface is smooth and uniform in texture.
   a. Finish and measure surface so gap at any point between surface and an unleveled freestanding 10-foot- (3-m-) long straightedge, resting on 2 high spots and placed anywhere on the surface, does not exceed 1/4 inch (6 mm).

C. Construction Joints: Construct joints true to line with faces perpendicular to surface plane of concrete floor topping, at locations indicated or as approved by Architect.

1. Coat face of construction joint with epoxy adhesive at locations where concrete floor topping is placed against hardened or partially hardened concrete floor topping.

D. Contraction Joints: Form weakened-plane contraction joints with power saws equipped with shatterproof abrasive or diamond-rimmed blades. Cut 1/8-inch- (3-mm-) wide joints into concrete floor topping when cutting action will not tear, abrade, or otherwise damage surface and before random contraction cracks develop.

1. Form joints in concrete floor topping over contraction joints in base slabs, unless otherwise indicated.
2. Construct contraction joints for a combined depth equal to topping thickness and not less than one-fourth of base-slab thickness.
3. Construct contraction joints for a depth equal to one-half of concrete floor topping thickness, but not less than 1/2 inch (13 mm) deep.

3.4 PROTECTING AND CURING

A. General: Protect freshly placed concrete floor topping from premature drying and excessive cold or hot temperatures.

B. Evaporation Retarder: Apply evaporation retarder to concrete floor topping surfaces in hot, dry, or windy conditions before and during finishing operations. Apply according to manufacturer's written instructions after placing, screeding, and bull floating or darbying floor topping, but before float finishing.

C. Begin curing immediately after finishing concrete floor topping. Cure by one or a combination of the following methods, according to concrete floor topping manufacturer's written instructions:
1. Moisture-Retaining-Cover Curing: Cover concrete surfaces with moisture-retaining cover for curing concrete, placed in widest practicable width, with sides and ends lapped at least 12 inches (300 mm), and sealed by waterproof tape or adhesive. Cure for not less than seven days. Immediately repair any holes or tears during curing period using cover material and waterproof tape.
2. Curing Compound: Apply uniformly in two coats in continuous operations by power spray or roller according to manufacturer's written instructions. Recoat areas subjected to heavy rainfall within three hours after initial application. Maintain continuity of coating and repair damage during curing period.

3.5 JOINT FILLING

A. Prepare and clean contraction joints and install semirigid joint filler, according to manufacturer's written instructions, once topping has fully cured.

B. Remove dirt, debris, saw cuttings, curing compounds, and sealers from joints; leave contact faces of joint clean and dry.

C. Install semirigid joint filler full depth of contraction joints. Overfill joint and trim semirigid joint filler flush with top of joint after hardening.

3.6 REPAIRS

A. Defective Topping: Repair and patch defective concrete floor topping areas, including areas that have not bonded to concrete substrate.

3.7 FIELD QUALITY CONTROL

A. Testing Agency: Owner will engage a qualified independent testing and inspecting agency to perform field tests and inspections and prepare test reports.

B. Remove and replace applications of concrete floor topping where test results indicate that it does not comply with specified requirements.

C. Additional testing and inspecting, at Contractor's expense, will be performed to determine compliance of replaced or additional work with specified requirements.

END OF SECTION

SECTION 04 20 00

UNIT MASONRY

PART 1 GENERAL

1.01 SECTION INCLUDES

A. Concrete Block.

B. Mortar and Grout.

C. Reinforcement and Anchorage.

D. Accessories.

1.02 RELATED REQUIREMENTS

A. Section 03 20 00 - Concrete Reinforcing: Reinforcing steel for grouted masonry.

B. Section 07 90 05 - Sealants two components Polyurethane, Non-Sag Backing rod and sealant at control and expansion joints.

1.03 REFERENCE STANDARDS

A. ACI 530/ASCE 5/TMS 402 - Building Code Requirements for Masonry Structures; American Concrete Institute International; 2005.

B. ACI 530.1/ASCE 6/TMS 602 - Specification For Masonry Structures; American Concrete Institute International; 2005.

C. ASTM A 153/A 153M - Standard Specification for Zinc Coating (Hot-Dip) on Iron and Steel Hardware; 2005.

D. ASTM C 90 - Standard Specification for Loadbearing Concrete Masonry Units; 2006b.

E. ASTM C 129 - Standard Specification for Nonloadbearing Concrete Masonry Units; 2006.

F. ASTM C 140 - Standard Test Methods of Sampling and Testing Concrete Masonry Units and Related Units; 2007a.

G. ASTM C 144 - Standard Specification for Aggregate for Masonry Mortar; 2004.

H. ASTM C 150 - Standard Specification for Portland Cement; 2007.

I. ASTM C 207 - Standard Specification for Hydrated Lime for Masonry Purposes; 2006.

J. ASTM C 270 - Standard Specification for Mortar for Unit Masonry; 2007a.

K. ASTM C 404 - Standard Specification for Aggregates for Masonry Grout; 2007.

L. ASTM C 476 - Standard Specification for Grout for Masonry; 2007.

M. ASTM C 780 - Standard Test Method for Preconstruction and Construction Evaluation of Mortars for Plain and Reinforced Unit Masonry; 2007a.

N. ASTM C 979 - Standard Specification for Pigments for Integrally Colored Concrete; 2005.

O. ASTM D 226 - Standard Specification for Asphalt-Saturated Organic Felt Used in Roofing and Waterproofing; 2006.

1.04 ADMINISTRATIVE REQUIREMENTS

A. Preinstallation Meeting: Convene a preinstallation meeting one week before starting work of this section; require attendance by all relevant installers.

1.05 SUBMITTALS

A. Product Data: Provide data for masonry units, mortar, and masonry accessories.

B. Manufacturer's Certificate: Certify that masonry units meet or exceed specified requirements.

1.06 QUALITY ASSURANCE

A. Comply with provisions of ACI 530/ASCE 5/TMS 402 and ACI 530.1/ASCE 6/TMS 602, except where exceeded by requirements of the contract documents.

1.07 DELIVERY, STORAGE, AND HANDLING

A. Deliver, handle, and store masonry units by means that will prevent mechanical damage and contamination by other materials.

PART 2 PRODUCTS

2.01 CONCRETE MASONRY UNITS

A. Concrete Block: Comply with referenced standards and as follows:
   1. Size: Standard units with nominal face dimensions of 16 x 8 inches (400 x 200 mm) and nominal depth of 8 inches (200 mm).
   2. Load-Bearing Units: ASTM C 90, medium weight.

2.02 MORTAR AND GROUT MATERIALS

A. Portland Cement: ASTM C 150, Type I; color as required to produce approved color sample.
   1. Not more than 0.60 percent alkali.

B. Hydrated Lime: ASTM C 207, Type S.

C. Mortar Aggregate: ASTM C 144.

D. Grout Aggregate: ASTM C 404.

E. Pigments for Colored Mortar: Pure, concentrated mineral pigments specifically intended for mixing into mortar and complying with ASTM C 979.
   1. Color(s): As selected by Architect from manufacturer's full range.

F. Water: Clean and potable.

2.03 REINFORCEMENT AND ANCHORAGE

A. Reinforcing Steel: Type specified in Section 03 20 00; size as indicated on drawings; galvanized finish.

B. Strap Anchors: Bent steel shapes configured as required for specific situations, 1-1/4 in (32 mm) width, 0.105 in (2.7 mm) thick, lengths as required to provide not more than 1 inch (25 mm) and not less than 1/2 inch (13 mm) of mortar coverage from masonry face, corrugated for embedment in masonry joint, hot dip galvanized to ASTM A 153/A 153M, Class B.

C. Flexible Anchors: 2-piece anchors that permit differential movement between masonry and building frame, sized to provide not more than 1 inch (25 mm) and not less than 1/2 inch (13 mm) of mortar coverage from masonry face.

2.04 FLASHINGS

2.05 ACCESSORIES

A. Preformed Control Joints: Rubber material. Provide with corner and tee accessories, fused joints.

B. Joint Filler: Closed cell polyvinyl chloride; oversized 50 percent to joint width; self expanding;

wide x by maximum lengths available.

C. Building Paper: ASTM D 226, Type I ("No.15") asphalt felt.

D. Cleaning Solution: Non-acidic, not harmful to masonry work or adjacent materials.

2.06 MORTAR AND GROUT MIXES

A. Mortar for Unit Masonry: ASTM C 270, using the Proportion Specification.
   1. Type S and conforming with CBC Section 2103.8 and attaining a minimum compressive strength of 1800 psi at 28 days.

B. Grout: ASTM C 476. Consistency required to fill completely volumes indicated for grouting; fine grout for spaces with smallest horizontal dimension of 2 inches (50 mm) or less; coarse grout for spaces with smallest horizontal dimension greater than 2 inches (50 mm).

C. Mixing: Use mechanical batch mixer and comply with referenced standards.

PART 3 EXECUTION: Refer also to notes on Structural drawings.

3.01 EXAMINATION

A. Verify that field conditions are acceptable and are ready to receive masonry.

B. Verify that related items provided under other sections are properly sized and located.

C. Verify that built-in items are in proper location, and ready for roughing into masonry work.

3.02 PREPARATION

A. Direct and coordinate placement of metal anchors supplied for installation under other sections.

B. Provide temporary bracing during installation of masonry work. Maintain in place until building structure provides permanent bracing.

3.03 COURSING

A. Establish lines, levels, and coursing indicated. Protect from displacement.

B. Maintain masonry courses to uniform dimension. Form vertical and horizontal joints of uniform thickness.

C. Concrete Masonry Units:
   1. Bond: Running.
   2. Coursing: One unit and one mortar joint to equal 8 inches (200 mm).
   3. Mortar Joints: Concave.

3.04 PLACING AND BONDING

A. Lay hollow masonry units with face shell bedding on head and bed joints.

B. Buttering corners of joints or excessive furrowing of mortar joints is not permitted.

C. Remove excess mortar and mortar smears as work progresses.

D. Interlock intersections and external corners, except for units laid in stack bond.

E. Do not shift or tap masonry units after mortar has achieved initial set. Where adjustment must be made, remove mortar and replace.

F. Perform job site cutting of masonry units with proper tools to provide straight, clean, unchipped edges. Prevent broken masonry unit corners or edges.

G. Isolate masonry partitions from vertical structural framing members with a control joint as

indicated.

3.05 CAVITY MORTAR CONTROL

A. Do not permit mortar to drop or accumulate into cavity air space or to plug weep/cavity vents.

3.06 REINFORCEMENT AND ANCHORAGE - GENERAL

A. Lap joint reinforcement ends per the Structural drawings.

B. Fasten anchors to structural framing and embed in masonry joints as masonry is laid. Unless otherwise indicated on drawings or closer spacing is indicated under specific wall type, space anchors at maximum of 36 inches (900 mm) horizontally and 24 inches (600 mm) vertically.

3.07 MASONRY FLASHINGS

A. Whether or not specifically indicated, install masonry flashing to divert water to exterior at all locations where downward flow of water will be interrupted.

3.08 GROUTED COMPONENTS

A. Lap splices minimum 72 bar diameters.

B. Support and secure reinforcing bars from displacement. Maintain position within 1/2 inch (13 mm) of dimensioned position.

C. Place and consolidate grout fill without displacing reinforcing.

3.09 CONTROL AND EXPANSION JOINTS

A. Install preformed control joint device in continuous lengths. Seal butt and corner joints in accordance with manufacturer's instructions.

B. Form expansion joint as detailed.

3.10 TOLERANCES

A. Maximum Variation from Alignment of Columns: 1/4 inch (6 mm).

B. Maximum Variation from Plane of Wall: 1/4 inch in 10 ft (6 mm/3 m) and 1/2 inch in 20 ft (13 mm/6 m) or more.

C. Maximum Variation from Plumb: 1/4 inch (6 mm) per story non-cumulative; 1/2 inch (13 mm) in two stories or more.

D. Maximum Variation from Level Coursing: 1/8 inch in 3 ft (3 mm/m) and 1/4 inch in 10 ft (6 mm/3 m); 1/2 inch in 30 ft (13 mm/9 m).

E. Maximum Variation of Joint Thickness: 1/8 inch in 3 ft (3 mm/m).

F. Maximum Variation from Cross Sectional Thickness of Walls: 1/4 inch (6 mm).

3.11 CUTTING AND FITTING

A. Cut and fit for chases, pipes, conduit, sleeves, and grounds. Coordinate with other sections of work to provide correct size, shape,and location.

3.12 PARGING

A. Dampen masonry walls prior to parging.

B. Parge masonry walls in two uniform coats of mortar to a total thickness of 3/4 inch (19 mm).

C. Steel trowel surface smooth and flat with a maximum surface variation of 1/8 inch per foot (1 mm/m).

3.13 FIELD QUALITY CONTROL

A. An independent testing agency will perform field quality control tests, as specified in Section 01 40 00.

B. Concrete Masonry Unit Tests: Test each variety of concrete unit masonry in accordance with ASTM C 140 for conformance to requirements of this specification.

C. Mortar Tests: Test each type of mortar in accordance with ASTM C 780, testing with same frequency as masonry samples.

3.14 CLEANING

A. Remove excess mortar and mortar droppings.

B. Replace defective mortar. Match adjacent work.

C. Clean soiled surfaces with cleaning solution.

3.15 PROTECTION

A. Without damaging completed work, provide protective boards at exposed external corners that are subject to damage by construction activities.

END OF SECTION

SECTION 05 12 00

STRUCTURAL STEEL

PART 1 GENERAL

1.01 SUMMARY

A. This section includes labor and materials which are required for the completion of structural steel construction as indicated and specified. The Conditions of the Contract apply to this section as fully as if repeated herein.

B. Miscellaneous steel fabrications not forming a part of the structural framing system are specified in Section 05 50 00.

1.02 REFERENCES:

A. The editions of specifications and standards referenced herein, published by the following organizations, apply to the construction only to the extent specified by the reference.

American Institute of Steel Construction (AISC).
American Society for Testing and Materials (ASTM).
American Welding Society (AWS).
Steel Structures Painting Council (SSPC).
Research Council on Riveted and Bolted Joints (RCRBJ).

1.03 SUBMITTALS:

A. Mill test certificates for mill order steel which can be identified by means of heat or melt numbers.

B. Shop Drawings: Submit shop and erection drawings for review. Review of drawings will cover only the general scheme, design, and character of the details, but not the checking of dimensions nor will such review relieve the Contractor from responsibility for executing the construction in accordance with the contract documents.

1. Field Measurements: Before starting construction or proceeding with shop and erection drawings, verify measurements, lines, grades, elevations, locations and details of existing field conditions and be responsible for correctness, conformity, accuracy and execution of structural steel construction to conform to actual conditions.

2. Detailing: Detail in conformance with AISC Manual "Structural Steel Detailing", except where otherwise indicated.

3. Field Connections: Clearly show field connections on the erection drawings with complete details as required so that the connections can be made without reference to the design drawings.

4. Provide setting drawings, templates, and directions for installation of anchor bolt and other anchorages to installed under other sections.

C. Submit shop drawings in the following form:

1. Two (2) sets of blue or black line prints, plus one (1) set of sepia of reproducibles. Drawings

in excess of those stated will be returned without comment. Upon receipt of reproducibles with review comments, contractor shall print and deliver two sets to the owner, in addition to any other sets he may print for distribution.

1.04 QUALITY ASSURANCE.

A. Qualification of Welding: Qualify welding procedures and welding operators in accordance with AWS D1.1. Provide certifications that welders to be employed have satisfactorily passed AWS qualification tests. If recertification of welders is required, retesting will be the Contractor's responsibility.

B. Regulatory Requirements: Except as modified by the requirements indicated or specified herein, structural steel construction shall conform to the California Building Code, Chapter 22, 2006 Edition.

1.05 DELIVERY, STORAGE, AND HANDLING:

A. Deliver material in time to insure uninterrupted progress of the construction. Store materials in a manner to preclude damage and permit ready access for inspection and identification of each shipment. Store steel materials, either plain or fabricated, above the ground upon platforms, pallets, skids, or other supports. Keep materials free from dirt, grease, and other foreign matter, and protect from corrosion. Material showing evidence of damage will be rejected and shall be immediately removed from the site.

PART 2 PRODUCTS

2.01 GENERAL:

A. Use only new and undamaged materials. Steel which in the opinion of the Inspector is badly corroded or physically damaged shall not be incorporated in the construction.

2.02 MATERIALS: Refer also to notes on Structural drawings

A. Structural Steel, Shapes, Bars and Plates: ASTM A 36. ASTM A 992 Grade 50 for W Sections.

B. HSS Structural Tubes, ASTM A 500, Grade B.

C. Structural Pipe Members: ASTM A 53, Type E or S, Grade B.

D. High Strength Bolts: ASTM A 325.

E. Common Bolts and Nuts: ASTM A 307. Provide either hexagonal or square heads and nuts except use only hexagonal units for exposed connections.

F. Filler Metal for Welding: Meet the requirements of AWS D1.1. Electrodes shall be as recommended by their manufacturers for the position and other conditions of actual use. Electrodes shall be E70 series.

G. Anchor Bolts, Pins and Rods: ASTM A 307 and ASTM A449 for Moment Frame Column.

H. Primer: Manufacturer's or fabricator's standard, fast curing, lead free, universal modified alkyd primer selected for good resistance to normal atmospheric corrosion, for compatibility with finish paint systems indicated and for capability to provide a sound foundation for field applied topcoats

despite prolonged exposure, complying with performance requirements of Fed. Spec. TT-P-645.

I. Galvanizing: ASTM A 123.

J. Galvanizing Repair Compound: High zinc dust content galvanizing repair paint conforming to Mil. Spec DOD-P-21035A or hot applied zinc rich material. Acceptable products or equal:

American Solder & Flux; Drygalv
Kenco Div.; Galvicon
Metalloy Products Co.; Galvaloy

K. Metallic, Nonshrink Grout: For grout in concealed locations use premixed factory packaged, ferrous aggregate, grouting compound meeting the requirements of Corps of Engineers Specification CRD-C-588. Acceptable products or equal:

Gifford-Hill & Co., Inc.; Supreme Plus
Master Builders; Embeco 636
Sonneborn Building Products; Ferrolity G-DS

L. Nonmetallic, Nonshrink Grout: For grout in exposed to view locations use premixed, nonmetallic, non-corrosive, non-staining grouting compound containing silica sands, portland cement, shrinkage compensating agents and water reducing agents, meeting the requirements of Corps of Engineers Specification CRD-C-621-81. Acceptable products or equal.

Gifford hill & Co., Inc.; Supreme
Master Builders; Masterflow 713
The Upco Company; Upcon Nonshrink

2.03 FABRICATION:

A. General: Fabricate and assemble materials in the shop to the greatest extent possible. Shearing, flame cutting, and chipping shall be done carefully and accurately. Coordinate connection details where steel attaches to concrete. Verify lines, levels, and dimensions, where possible, just before commencing fabrication of connection details. Correct construction that does not fit. Schedule and coordinate construction under this section with that specified elsewhere. When not otherwise indicated or specified, comply with applicable requirements of AISC "Specifications for Design, Fabrication and Erection of Structural Steel for Buildings".

B. Exposed Steel Work: Where steel surfaces are exposed to view in the finished construction, use only materials which are smooth and free of surface blemishes including pitting, seam marks, roller marks, rolled trade names and roughness. Remove such blemishes by grinding or by welding and grinding, before cleaning, treating and application of surface finishes.

C. Connections: Bolt or weld connections as indicated. One sided or other types of eccentric connections will not be permitted unless shown in detail on the shop Drawings.

1. Make welded connections in accordance with AWS D1.1. Assemble and weld built-up sections by methods which will produce true alignment of axes without warp.

2. Grind and dress smooth welds exposed to view in the finished construction, so that the shape and profile of the item welded is preserved.

D. Joints: Compression joints depending upon contact bearing shall have bearing surfaces truly milled perpendicular to their axis. Cut or dress other joints straight and true.

E. Holes: Cut, drill, or punch holes at right angles to the surface of the metal. Do not enlarge holes by burning, however holes may be enlarged by careful reaming. Holes in base or bearing plates shall be drilled. Holes shall be provided in members to permit connecting the construction of other trades.

F. Marking: Mark members for erection in accordance with shop drawings. Members weighing over 4 tons shall have the weight so marked on the member. Long members shall be loaded onto the trucks and so marked.

2.04 SHOP PAINTING:

A. General: Shop paint structural steel except galvanized members or those members or portions of members to be embedded in concrete or mortar. On embedded steel which is partially exposed, paint the exposed portion and the initial 2 inches of embedded areas only. Do not paint surfaces to be welded or high strength bolted with friction-type connections. Do not paint surfaces which are scheduled to receive sprayed-on fireproofing.

B. Surface Preparation: After inspection and before shipping, clean steelwork to be painted. Remove loose rust, loose mill scale and spatter, slag or flux deposits using power tool cleaning in accordance with SSPC SP-3.

C. Painting: Immediately after surface preparation, apply shop primer in accordance with manufacturer's instructions and at a rate to provide a dry film thickness of not less than 1.5 mils. Use painting methods which result in full coverage of joints, corners, edges and exposed surfaces.

2.05 GALVANIZING

A. General: All steel and ferrous metal items except these which are scheduled to receive special fireproofing, located on the exterior of the building, and otherwise specifically indicated to be galvanized, shall be galvanized by the hot-dip process, meeting the requirements of ASTM A 123. All required hot-dip galvanizing shall be done after fabrication, in the largest sections possible. Items too large for available dip tanks shall be sprayed, by approved methods, with molten zinc to coating thickness of 0.003 inch to 0.004 inch.

B. Coating Weight: Weight of the zinc coating per square foot of actual surface shall average not less than 2.0 ounces and no individual specimen shall show less than 1.8 ounces.

C. Repair of Coating: Restore shop galvanized metal necessitating field soldering or welding which in any manner removes original galvanizing, by using galvanizing repair compound in accordance with the manufacturer's instructions.

PART 3 EXECUTION

3.01 PREPARATION:

A. Field Measurements and Templates: Secure field measurements required for proper and adequate fabrication and installation. Furnish templates for exact location of items to be embedded in concrete and setting instructions required for installation.

B. Temporary Shoring and Bracing: In accordance with OSHA, design and provide temporary shoring and bracing members with connections of sufficient strength to bear imposed loads.

Remove temporary members and connections when permanent members are securely in place and final connections are made. Provide temporary guy lines to achieve proper alignment of structure as erection proceeds.

C. Temporary Planking: Provide temporary planking as required by OSHA and as necessary to effectively complete the construction.

3.02 ERECTION:

A. Setting Base and Bearing Plates: After the supported members have been plumbed, aligned and properly positioned, set base and bearing plates. Support plates on adjustable bolt supports or shims until grout has set. Pack grout solidly between bearing surfaces and bases or plates to ensure that no voids remain. Follow the grout manufacturer's instructions.

B. Framing: Except as specified herein, erect framing in accordance with AISC Code of Standard Practice. Plan and layout framing so that cutting will not be required. Erect the construction plumb, square, and true to line, level, and position indicated within tolerances established in the AISC Code of Standard Practice.

C. Holding and Protection: In assembling and during welding hold the component parts with sufficient clamps or other adequate means to keep parts straight and in close contact. In welding, take precautions to minimize "lock-up" stress and distortion due to heat. In wind, perform welding only after adequate wind protection is furnished and set up.

D. Connections: Bold field connections except where welding is indicated. Perform welding as specified for shop welding. Provide high strength bolted connections for principle bolted connections where indicated. Provide common bolted connections for secondary connections and other bolted connections not indicated otherwise. Install high strength bolts in accordance with AISC “Specifications for Structural Joints Using ASTM A325 or A490 Bolts”. Where galvanized members are to be welded, grind off galvanizing near the joint, weld and touch up with galvanizing repair compound.

E. Camber: Inspect beams and girders in the shop for camber and align so that they are fabricated and erected with their camber turned upwards. Camber shall not exceed the requirements of the governing documents unless approved by the Architect.

F. On exposed construction, remove erection bolts, temporary welds, run-off plates and backing strips. Fill holes from erection bolts with plug and grind smooth.

G. Erect structural steel by methods and techniques suitable and appropriate to satisfy the sequence and schedules established by the Contractor or Construction Manager. The existence of smooth or paved access roads into and through the site for delivery of derricks, cranes and/or adequate space are not available in close proximity to the erection point, provide and use whatever equipment which may be necessary to deliver and erect structural steel in a timely and efficient manner at any location on the project.

3.03 FIELD INSPECTION AND TESTING:

A. Inspection and testing per the standards of the City of Riverside.

3.04 AS ERECTED DRAWINGS:

A. After all steel has been erected, correct or revise the shop drawings and erection diagrams to correspond with the changes made in the field and submit to the Architect.

END OF SECTION

SECTION 05 30 00

METAL DECKING

PART 1 GENERAL

1.01 SUMMARY:

A. This section includes metal floor and roof deck and shear studs as indicated and specified. The Conditions of the Contract apply to this as fully as if repeated herein.

1.02 REFERENCES:

A. The editions of specifications and standards referenced herein, published by the following organizations, apply to the construction only to the extent specified by the reference.

American Institute of Steel Construction (AISC).
American Society for Testing and Materials (ASTM).
American Welding Society (AWS).
Steel Deck Institute (SDI).

1.03 SUBMITTALS:

A. Manufacturer's product data.

B. Shop Drawings: Submit shop, erection and placement drawings of and roof deck.

1. Field Measurements: Before starting shop and erection drawings, verify measurements, lines, grades, elevations, locations and details of field conditions and be responsible for correctness, conformance, accuracy and execution of construction to conform to actual conditions.

2. Detail the construction in conformance with the AISC Structural Steel Detailing, except where otherwise indicated.

3. Field Connections and placement Diagrams: Show field connections and placement diagrams on the erection drawings with complete details, layouts and dimensions as required so that the construction can proceed without reference to the design drawings.

C. LEED Report: Provide report related to Recycled Content and Regionally-sourced Materials.

1.04 QUALITY ASSURANCE:

A. Qualification of Welding: Qualify welding procedures and welding operators in accordance with AWS D1.1. Provide certifications that welders to be employed in the construction have satisfactorily passed AWS qualification tests. If recertification of welders is required, retesting will be the Contractor's responsibility.

B. Regulatory Requirements: Furnish and install metal deck in accordance with the manufacturer's current ICC Research Committee Report.

PART 2 PRODUCTS

2.01 MATERIALS:

A. Decking and Accessories: ASTM 1008-11, Grade Ck designed for unshored condition.

C. Small Rolled Steel Shapes and Bars Used for Reinforcing Openings and Holes: ASTM A 36.

D. Welding Rod: AWS A5.1, E70XX, Low Hydrogen.

E. Shear Studs: Heated stud type of cold finished carbon steel meeting the requirements of ASTM A 108, Grade 1015 or 1020, with dimensions meeting the requirements of AWS D1.1. Use ferrules suitable for use with galvanized metal deck where indicated. Acceptable manufacturers include, but are not limited to, the following:

Nelson Stud Welding Division

F. Galvanizing Repair Compound: High zinc dust content galvanizing repair paint meeting the requirements of Mil. Spec DOD-P-21035A or hot applied zinc rich material. Acceptable products include, but are not limited to, the following:

American Solder & Flux; Drygalv
Kenco Div.; Galvicon
Metalloy Products Co.; Galvalloy

G. Flexible Closure Strips: Manufacturer's standard vulcanized, closed-cell, synthetic rubber.

H. Concrete Topping: As indicated and as specified in Section 03 3000.

2.02 FLOOR AND ROOF DECK UNITS:

A. Design Requirements: Furnish decking in continuous sheets to span the entire run as indicated.

1. Minimum Base Metal Thicknesses: Not less than the gages (thicknesses) indicated.

2. Sections, shapes and properties, for floor and roof decking shall be equivalent to those of the decking types specified herein as verified by ICC Evaluation Services Reports. These shall include the following:

(a) Noncomposite flexural effective section modulli and moments of inertia.

(b) Composite vertical load capacities (considering the deck spans and concrete where indicated).

(c) Composite and noncomposite diaphragm capacities, as applicable, considering the concrete, where indicated, and considering the welding attachment indicated.

B. Decking Types:

1. Standard Roof Deck: Size and depth, galvanized steel with gage thickness as indicated on the Drawings. Acceptable products: Refer to schedule on Structural drawings.

2. Composite Floor Roof Deck: Open beam deck, 3 inches deep, galvanized steel with gage thickness as indicated on the Drawings. Fabricate decking with integral embossing or raised pattern to provide mechanical bonding with the concrete floor topping. Acceptable products:

Refer to schedule on Structural drawings.

2.03 ACCESSORIES:

A. Furnish accessories required to provide a complete installation including fillers for end panels, friction caps for closing shop fabricated access holes for welding, flashing at columns and closures for cell ends, roof and floor drain sumps, metal and neoprene partition closures, non-penetrating hanger tabs, and other accessories required.

PART 3 EXECUTION

3.01 ERECTION:

A. Adjust steel panel units in place before permanently fastening, and accurately align. Correct inaccuracies in alignment or level before steel panels are finally placed.

B. Where large predetermined openings for elevators, stairs, ducts and similar elements passing through the panel units occur, furnish prefabricated units to fit job conditions; where other holes or openings are required in decking after erection, reinforce such holes as indicated. Cantilever deck to the edge of slabs as indicated.

C. Provide proper bearing on supporting beams as indicated. Fasten steel panels to supporting beams by electric arc welding by certified welding operators. Weld seams as indicated. Provide all welding attachments as indicated.

D. Provide closures, end plates, profile plates and other accessories required for a complete installation. Weld in place.

E. Installation of Shear Studs: The studs shall be automotically end welded in accordance with the manufacturer's recommendations in such a manner as to provide complete fusion between the end of the stud and the plate. There should be no porosity or evidence of lack of fusion between the welded end of the stud and the plate. The stud shall decrease in length during welding approximately c" for e" and under, and $^{3}/_{16}$ for over e" diameter. Welding shall be done only by qualified welders approved by the welding inspector.

1. The studs shall be installed only by certified operators approved by the manufacturer and who are thoroughly familiar with the installation equipment. A copy of the operating instruction for the equipment shall be at the job site at all times.

2. Installation and qualification of weld base shall meet the requirements of AWS D1.1 except as specified herein.

3. Studs bent more than 15 degrees from the vertical by inspection and testing procedures shall be bent back to an acceptable angle and show no signs of failure if they are to be considered as part of the required studs. Otherwise they shall be replaced by additional studs.

4. Studs that show no signs of failure will be accepted as shear connectors provided they meet the dimensional limitations indicated, provided no portion is less than one inch from a proposed concrete surface and provided bends or out of plumbness does not exceed 15 degrees.

5. The studs shall have complete fusion to the steel beams underlying the decking. Where repairs are made by fillet welding, such welding shall be between stud and beam with removal or portions of the decking as required.

6. Where the decking is thick due to heavy gage sheets or double sheets at cellular panels, holes in one or more sheets shall be made before stud welding where required to ensure fusion of studs to beams. When such holes are not made, fusion shall be verified.

7. Ferrules shall be removed after completion.

F. Substitution of Puddle Welds by Shear Studs: When shear studs are installed through the metal deck without being installed through holes in single sheet units or holes through both sheets of cellular units, required puddle welds may be considered as being supplied by the studs on a one to one basis.

G. Support at Columns: Where, due to cutting of deck units at columns, bearing support is not provided for the end of a web, such web shall be welded to the column or structural steel material at the column or equivalent support shall be provided. The welding or equivalent support shall be sufficient for the support of the deck, the “wet” weight of concrete and other construction loads.

H. Touch Up of Welds: Upon cooling, touch-up all welds exposed to weather with galvanizing repair compound.

3.02 AS ERECTED DRAWINGS:

A. After all steel has been erected, correct or revise the shop drawings erection and placement diagrams to correspond with the changes made in the field.

3.03 FIELD QUALITY CONTROL:

A. Field testing and inspection are as required by the City of Riverside.

END OF SECTION

SECTION 05 50 00

METAL FABRICATIONS

PART 1 GENERAL

1.01 SECTION INCLUDES

A. Shop fabricated steel items.

1.02 RELATED REQUIREMENTS

A. Section 03 30 00 - Cast-in-Place Concrete: Placement of metal fabrications in concrete.

B. Section 05 51 00 - Metal Stairs.

C. Section 09 90 00 - Painting and Coating: Paint finish.

1.03 REFERENCE STANDARDS

A. ANSI A14.3 - American National Standard for Ladders -- Fixed -- Safety Requirements; 2002.

B. ASTM A 36/A 36M - Standard Specification for Carbon Structural Steel; 2005.

C. ASTM A 53/A 53M - Standard Specification for Pipe, Steel, Black and Hot-Dipped, Zinc-Coated, Welded and Seamless; 2007.

D. ASTM A 123/A 123M - Standard Specification for Zinc (Hot-Dip Galvanized) Coatings on Iron and Steel Products; 2002.

E. ASTM A 153/A 153M - Standard Specification for Zinc Coating (Hot-Dip) on Iron and Steel Hardware; 2005.

F. ASTM A 283/A 283M - Standard Specification for Low and Intermediate Tensile Strength Carbon Steel Plates; 2003 (Reapproved 2007).

G. ASTM A 307 - Standard Specification for Carbon Steel Bolts and Studs, 60,000 PSI Tensile Strength; 2007b.

H. ASTM A 325 - Standard Specification for Structural Bolts, Steel, Heat Treated, 120/105 ksi Minimum Tensile Strength; 2007a.

I. ASTM A 325M - Standard Specification for Structural Bolts, Steel, Heat Treated 830 MPa Tensile Strength (Metric); 2007.

J. ASTM A 500 - Standard Specification for Cold-Formed Welded and Seamless Carbon Steel Structural Tubing in Rounds and Shapes; 2007.

K. AWS A2.4 - Standard Symbols for Welding, Brazing, and Nondestructive Examination; American Welding Society; 2007.

L. AWS D1.1/D1.1M - Structural Welding Code - Steel; American Welding Society; 2006 and Errata.

M. SSPC-Paint 15 - Steel Joist Shop Primer; Society for Protective Coatings; 1999 (Ed. 2004).

N. SSPC-Paint 20 - Zinc-Rich Primers (Type I, "Inorganic," and Type II, "Organic"); Society for Protective Coatings; 2002 (Ed. 2004).

O. SSPC-SP 2 - Hand Tool Cleaning; Society for Protective Coatings; 1982 (Ed. 2004).

1.04 SUBMITTALS

A. See Section 01 33 00 - Submittal Requirements, for submittal procedures.

B. Shop Drawings: Indicate profiles, sizes, connection attachments, reinforcing, anchorage, size and type of fasteners, and accessories. Include erection drawings, elevations, and details where applicable.
   1. Indicate welded connections using standard AWS A2.4 welding symbols. Indicate net weld lengths.

C. Welders' Certificates: Submit certification for welders employed on the project, verifying AWS qualification within the previous 12 months.

1.05 QUALITY ASSURANCE

A. Design, fabricate and install metal fabrications in accordance with AISC guidelines.

PART 2 PRODUCTS

2.01 MATERIALS - STEEL

A. Steel Sections: ASTM A 36/A 36M.

B. Steel Tubing: ASTM A 500, Grade B cold-formed structural tubing.

C. Steel Tubing for decorative railings: ASTM A269, Grade A welded cold-rolled steel w/G90 zinc coating in accordance with ASTM A123.

D. Plates: ASTM A 283.

E. Pipe: ASTM A 53/A 53M, Grade B Schedule 40, black finish.

F. Bolts, Nuts, and Washers: ASTM A 325 (ASTM A 325M), Type 1, galvanized to ASTM A 153/A 153M where connecting galvanized components.

G. Welding Materials: AWS D1.1/D1.1M; type required for materials being welded.

H. Shop and Touch-Up Primer: SSPC-Paint 15, complying with VOC limitations of authorities having jurisdiction.

I. Touch-Up Primer for Galvanized Surfaces: SSPC-Paint 20, Type I - Inorganic, complying with VOC limitations of authorities having jurisdiction..

2.02 FABRICATION

A. Fit and shop assemble items in largest practical sections, for delivery to site.

B. Fabricate items with joints tightly fitted and secured.

C. Grind exposed joints flush and smooth with adjacent finish surface. Make exposed joints butt tight, flush, and hairline. Ease exposed edges to small uniform radius.

D. Exposed Mechanical Fastenings: Flush countersunk screws or bolts; unobtrusively located; consistent with design of component, except where specifically noted otherwise.

E. Supply components required for anchorage of fabrications. Fabricate anchors and related components of same material and finish as fabrication, except where specifically noted otherwise.

2.03 FABRICATED ITEMS

A. Ladders: Steel; in compliance with ANSI A14.3; with mounting brackets and attachments; prime paint finish.
   1. Side Rails: 3/8 x 2 inches (9 x 50 mm) members spaced at 20 inches (500 mm).
   2. Rungs: one inch (25 mm) diameter solid round bar spaced 12 inches (300 mm) on center.

3. Space rungs 7 inches (175 mm) from wall surface.

B. Ledge Angles, Shelf Angles, Channels, and Plates Not Attached to Structural Framing: For support of metal decking; prime paint finish.

C. Elevator Hoistway Divider Beams: Beam sections; prime paint finish.

2.04 FINISHES - STEEL

A. Prime paint all steel items.

B. Prepare surfaces to be primed in accordance with SSPC-SP2.

C. Clean surfaces of rust, scale, grease, and foreign matter prior to finishing.

D. Prime Painting: One coat.

E. Galvanizing of Structural Steel Members: Galvanize after fabrication to ASTM A 123/A 123M requirements.

F. Galvanizing of Non-structural Items: Galvanize after fabrication to ASTM A 123/A 123M requirements.

2.05 FABRICATION TOLERANCES

A. Squareness: 1/8 inch (3 mm) maximum difference in diagonal measurements.

B. Maximum Offset Between Faces: 1/16 inch (1.5 mm).

C. Maximum Misalignment of Adjacent Members: 1/16 inch (1.5 mm).

D. Maximum Bow: 1/8 inch (3 mm) in 48 inches (1.2 m).

E. Maximum Deviation From Plane: 1/16 inch (1.5 mm) in 48 inches (1.2 m).

PART 3 EXECUTION

3.01 EXAMINATION

A. Verify that field conditions are acceptable and are ready to receive work.

3.02 PREPARATION

A. Clean and strip primed steel items to bare metal where site welding is required.

B. Supply setting templates to the appropriate entities for steel items required to be cast into concrete or embedded in masonry.

3.03 INSTALLATION

A. Install items plumb and level, accurately fitted, free from distortion or defects.

B. Provide for erection loads, and for sufficient temporary bracing to maintain true alignment until completion of erection and installation of permanent attachments.

C. Perform field welding in accordance with AWS D1.1/D1.1M.

D. Obtain approval prior to site cutting or making adjustments not scheduled.

E. After erection, prime welds, abrasions, and surfaces not shop primed or galvanized, except surfaces to be in contact with concrete.

3.04 TOLERANCES

A. Maximum Variation From Plumb: 1/4 inch (6 mm) per story, non-cumulative.

B. Maximum Offset From True Alignment: 1/4 inch (6 mm).

C. Maximum Out-of-Position: 1/4 inch (6 mm).

END OF SECTION

SECTION 05 51 00

METAL STAIRS

PART 1 GENERAL

1.01 SECTION INCLUDES

A. Steel stairs with metal pan and concrete fill.

B. Structural steel stair framing and supports.

C. Handrails and guards.

1.02 RELATED REQUIREMENTS

A. Section 03 30 00 - Cast-in-Place Concrete: Concrete fill in stair pans and landings; mesh reinforcement for landings.

B. Section 03 30 00 - Cast-in-Place Concrete: Placement of metal anchors in concrete.

C. Section 05 50 00 - Metal Fabrications.

D. Section 09 90 00 - Painting and Coating: Paint finish.

1.03 REFERENCE STANDARDS

A. ASTM A 36/A 36M and ASTM A992 - Standard Specification for Carbon Structural Steel; 2005.

B. ASTM A 53/A 53M - Standard Specification for Pipe, Steel, Black and Hot-Dipped, Zinc-Coated, Welded and Seamless; 2007.

C. ASTM A 153/A 153M - Standard Specification for Zinc Coating (Hot-Dip) on Iron and Steel Hardware; 2005.

D. ASTM A 325 - Standard Specification for Structural Bolts, Steel, Heat Treated, 120/105 ksi Minimum Tensile Strength; 2007a.

E. ASTM A 325M - Standard Specification for Structural Bolts, Steel, Heat Treated 830 MPa Tensile Strength (Metric); 2007.

F. ASTM A 500 - Standard Specification for Cold-Formed Welded and Seamless Carbon Steel Structural Tubing in Rounds and Shapes; 2007.

G. ASTM A 501 - Standard Specification for Hot-Formed Welded and Seamless Carbon Steel Structural Tubing; 2007.

H. ASTM A 786/A 786M - Standard Specification for Hot-Rolled Carbon, Low-Alloy, High-Strength Low-Alloy, and Alloy Steel Floor Plates; 2005.

I. AWS A2.4 - Standard Symbols for Welding, Brazing, and Nondestructive Examination; American Welding Society; 2007.

J. AWS D1.1/D1.1M - Structural Welding Code - Steel; American Welding Society; 2006 and Errata.

K. SSPC-Paint 15 - Steel Joist Shop Primer; Society for Protective Coatings; 1999 (Ed. 2004).

L. SSPC-SP 2 - Hand Tool Cleaning; Society for Protective Coatings; 1982 (Ed. 2004).

1.04 SUBMITTALS

A. See Section 01 33 00 – Submittal Procedures.

B. Shop Drawings: Indicate profiles, sizes, connection attachments, reinforcing, anchorage, size and type of fasteners, and accessories.
   1. Indicate welded connections using standard AWS A2.4 welding symbols. Indicate net weld lengths.

C. Welders' Certificates.

1.05 QUALITY ASSURANCE

A. Welder Qualifications: Show certification of welders employed on the Work, verifying AWS qualification within the previous 12 months.

PART 2 PRODUCTS

2.01 METAL STAIRS - GENERAL

A. Metal Stairs: Provide stairs of the design specified, complete with landing platforms, vertical and horizontal supports, railings, and guards, fabricated accurately for anchorage to each other and to building structure.
   1. Regulatory Requirements: Provide stairs and railings complying with the most stringent requirements of local, state, and federal regulations; where requirements of the contract documents exceed those of regulations, comply with the contract documents.
   2. Dimensions: As indicated on drawings.
   3. Shop assemble components; disassemble into largest practical sections suitable for transport and access to site.
   4. No sharp or rough areas on exposed travel surfaces and surfaces accessible to touch.
   5. Separate dissimilar metals using paint or permanent tape.

B. Metal Jointing and Finish Quality Levels:
   1. Architectural: All joints as inconspicuous as possible, whether welded or mechanical.
      a. Welded Joints: Continuously welded and ground smooth and flush.
      b. Mechanical Joints: Butted tight, flush, and hairline; concealed fastenings only.
      c. Exposed Edges and Corners: Eased to small uniform radius.
      d. Metal Surfaces to be Painted: Sanded or ground smooth, suitable for highest quality gloss finish.

C. Fasteners: Same material or compatible with materials being fastened; type consistent with design and specified quality level.

D. Anchors and Related Components: Same material and finish as item to be anchored, except where specifically indicated otherwise; provide all anchors and fasteners required.

2.02 METAL PAN STAIRS WITH CONCRETE TREADS

A. Jointing and Finish Quality Level: Architectural, as defined above.

B. Risers: Closed.

C. Treads: Metal pan with field-installed concrete fill.
   1. Concrete Depth: 1-1/2 inches (38 mm), minimum.
   2. Tread Pan Material: Steel sheet.
   3. Tread Pan Thickness: As required by design; 10 gage, 0.075 inch (1.9 mm) minimum.
   4. Pan Anchorage to Stringers: Welded to carrier angles welded to stringers.
   5. Concrete Reinforcement: Welded wire mesh.
   6. Concrete Finish: Concrete finish.

D. Risers: Same material and thickness as tread pans.
   1. Riser/Nosing Profile: Vertical riser with underside of nosing sloped up from bottom of tread

pan at not less than 60 degrees from horizontal, with rounded top of nosing of minimum radius.
2. Nosing Depth: Not more than 1-1/2 inch (38 mm) overhang.
3. Nosing Return: Flush with top of concrete fill, not more than 1/2 inch (12 mm) wide.

E. Stringers: Rolled steel tube sections.
1. Stringer Depth: 12 inches.
2. End Closure: Sheet steel of same thickness as risers welded across ends.

F. Landings: Similar construction, using corrugated steel decking, supported and reinforced as required to achieve design load capacity. Note: refer also to drawings for other landings

G. Railings: Steel pipe railings.

H. Finish: Shop- or factory-prime painted.

I. Under Side of Stair: Exposed to view, to be finished same as specified for other exposed to view surfaces.

2.03 HANDRAILS AND GUARDS

A. Refer to architectural details and drawings.

2.04 MATERIALS

A. Steel Sections: ASTM A 36/A 36M and ASTM A992.

B. Steel Tubing: ASTM A 500 or ASTM A 501 structural tubing, round and shapes as indicated.

C. Pipe: ASTM A 53/A 53M, Grade B Schedule 40, black finish.

D. Ungalvanized Steel Sheet: Hot- or cold-rolled, except use cold-rolled where finished work will be exposed to view.
1. Cold-Rolled Steel Sheet: ASTM A 1008/A 1008M, Designation CS (commercial steel).

E. Checkered Plate: ASTM A 786/A 786M, rolled steel floor plate; pattern no. 2.

F. Concrete Fill: Portland cement Type I, 3000 psi (20 MPa) 28 day strength, 2 to 3 inch (50 to 75 mm) slump.

G. Concrete Reinforcement: Mesh type as detailed, galvanized.

H. Steel Bolts, Nuts, and Washers: ASTM A 325 (ASTM A 325M), Type 1, galvanized to ASTM A 153/A 153M where connecting galvanized components.

I. Welding Materials: AWS D1.1; type required for materials being welded.

J. Shop and Touch-Up Primer: SSPC-Paint 15, complying with VOC limitations of authorities having jurisdiction.

2.05 SHOP FINISHING

A. Clean surfaces of rust, scale, grease, and foreign matter prior to finishing.

B. Do not prime surfaces in direct contact with concrete or where field welding is required.

C. Prime Painting: Use specified shop- and touch-up primer.
1. Preparation of Steel: In accordance with SSPC-SP 2, Hand Tool Cleaning.
2. Number of Coats: One.

PART 3 EXECUTION

3.01 EXAMINATION

A. Verify that field conditions are acceptable and are ready to receive work.

3.02 PREPARATION

A. When field welding is required, clean and strip primed steel items to bare metal.

B. Supply items required to be cast into concrete with setting templates.

3.03 INSTALLATION

A. Install components plumb and level, accurately fitted, free from distortion or defects.

B. Provide anchors, plates and angles required for connecting stairs to structure.

C. Allow for erection loads, and for sufficient temporary bracing to maintain true alignment until completion of erection and installation of permanent attachments.

D. Provide welded field joints where specifically indicated on drawings. Perform field welding in accordance with AWS D1.1.

E. Other field joints may be either welded or bolted provided the result complies with the limitations specified for jointing quality levels.

F. Obtain approval prior to site cutting or creating adjustments not scheduled.

G. After erection, prime welds, abrasions, and surfaces not shop primed or galvanized, except surfaces to be in contact with concrete.

3.04 TOLERANCES

A. Maximum Offset From True Alignment: 1/4 inch (6 mm).

END OF SECTION

SECTION 05 52 13

PIPE AND TUBE RAILINGS

PART 1 GENERAL

1.01 SECTION INCLUDES

A. Wall mounted handrails.

B. Stair railings and guardrails.

C. Free-standing railings at steps.

D. Balcony railings and guardrails.

1.02 RELATED REQUIREMENTS

A. Section 03 30 00 - Cast-in-Place Concrete: Placement of anchors in concrete.

B. Section 05 51 00 - Metal Stairs: Attachment plates for handrails specified in this section.

C. Section 09 90 00 - Painting and Coating: Paint finish.

1.03 REFERENCE STANDARDS

A. ASTM A 53/A 53M - Standard Specification for Pipe, Steel, Black and Hot-Dipped, Zinc-Coated, Welded and Seamless; 2007.

B. ASTM A 123/A 123M - Standard Specification for Zinc (Hot-Dip Galvanized) Coatings on Iron and Steel Products; 2002.

C. ASTM A 500 - Standard Specification for Cold-Formed Welded and Seamless Carbon Steel Structural Tubing in Rounds and Shapes; 2007.

D. ASTM E 935 - Standard Test Methods for Performance of Permanent Metal Railing Systems and Rails for Buildings; 2000 (Reapproved 2006).

E. ASTM E 985 - Standard Specification for Permanent Metal Railing Systems and Rails for Buildings; 2000 (Reapproved 2006).

F. SSPC-Paint 15 - Steel Joist Shop Paint; The Society for Protective Coatings; 1999 (Ed. 2004).

G. SSPC-Paint 20 - Zinc-Rich Primers (Type I, "Inorganic," and Type II, "Organic"); The Society for Protective Coatings; 2002 (Ed. 2004).

1.04 SUBMITTALS

A. See Section 01 33 00 – Submittal Procedures.

B. Shop Drawings: Indicate profiles, sizes, connection attachments, anchorage, size and type of fasteners, and accessories.

PART 2 PRODUCTS

2.01 RAILINGS - GENERAL REQUIREMENTS

A. Design, fabricate, and test railing assemblies in accordance with the most stringent requirements of ASTM E 985 and applicable local code.

B. Design railing assembly, wall rails, and attachments to resist lateral force of 200 lbs at any point without damage or permanent set. Test in accordance with ASTM E 935.

C. Allow for expansion and contraction of members and building movement without damage to connections or members.

D. Dimensions: See drawings for configurations and heights.

E. Provide anchors and other components as required to attach to structure, made of same materials as railing components unless otherwise indicated; where exposed fasteners are unavoidable provide flush countersunk fasteners.

F. Provide welded connections as indicated on the drawings to join lengths, seal open ends, and conceal exposed mounting bolts and nuts, including but not limited to elbows, T-shapes, splice connectors, flanges, escutcheons, and wall brackets.

2.02 STEEL RAILING SYSTEM

A. Steel Tube: ASTM A 500, Grade B cold-formed structural tubing.

B. Steel Pipe: ASTM A 53/A 53M, Grade B Schedule 40, black finish.

C. Welding Fittings: Factory- or shop-welded from matching pipe or tube; seams continuously welded; joints and seams ground smooth.

D. Galvanizing: In accordance with requirements of ASTM A 123/A 123M.
   1. Touch-Up Primer for Galvanized Surfaces: SSPC-Paint 20, Type I - Inorganic.

E. Shop and Touch-Up Primer: SSPC-Paint 15, complying with VOC limitations of authorities having jurisdiction.

2.03 FABRICATION

A. Accurately form components to suit specific project conditions and for proper connection to building structure.

B. Fit and shop assemble components in largest practical sizes for delivery to site.

C. Fabricate components with joints tightly fitted and secured.

D. Welded Joints:
   1. Exterior Components: Continuously seal joined pieces by continuous welds. Drill condensate drainage holes at bottom of members at locations that will not encourage water intrusion.
   2. Interior Components: Continuously seal joined pieces by continuous welds.
   3. Grind exposed joints flush and smooth with adjacent finish surface. Make exposed joints butt tight, flush, and hairline. Ease exposed edges to small uniform radius.

PART 3 EXECUTION

3.01 EXAMINATION

A. Verify that field conditions are acceptable and are ready to receive work.

3.02 PREPARATION

A. Clean and strip primed steel items to bare metal where site welding is required.

B. Supply items required to be cast into concrete or embedded in masonry with setting templates, for installation as work of other sections.

3.03 INSTALLATION

A. Install in accordance with manufacturer's instructions.

B. Install components plumb and level, accurately fitted, free from distortion or defects, with tight joints.

C. Anchor railings securely to structure.

3.04 TOLERANCES

A. Maximum Variation From Plumb: 1/4 inch per floor level, non-cumulative.

B. Maximum Offset From True Alignment: 1/4 inch.

C. Maximum Out-of-Position: 1/4 inch.

END OF SECTION

SECTION 06 41 00
ARCHITECTURAL WOOD CASEWORK

PART 1 GENERAL

1.01 SECTION INCLUDES

A. Specially fabricated cabinet units.

B. Countertops.

C. Cabinet hardware.

1.02 RELATED REQUIREMENTS

A. Section 01 6116 - Volatile Organic Compound (VOC) Content Restrictions.

B. Section 12 36 00 – Solid Surfacing; Cast plastic-resin countertops.

1.03 REFERENCE STANDARDS

A. AWI (QCP) - Quality Certification Program, www.awiqcp.org; current edition at www.awiqcp.org.

B. AWI/AWMAC/WI (AWS) - Architectural Woodwork Standards; 2009.

C. BHMA A156.9 - American National Standard for Cabinet Hardware; Builders Hardware Manufacturers Association; 2010 (ANSI/BHMA A156.9).

1.04 SUBMITTALS

A. See Section 01 3000 - Administrative Requirements, for submittal procedures.

B. Shop Drawings: Indicate materials, component profiles, fastening methods, jointing details, and accessories.
   1. Minimum Scale of Detail Drawings: 1-1/2 inch to 1 foot.
   2. Provide the information required by AWI/AWMAC/WI Architectural Woodwork Standards.

C. Product Data: Provide data for hardware accessories.

D. Samples: Submit actual samples of architectural cabinet construction, minimum 12 inches square, illustrating proposed cabinet, countertop, and shelf unit substrate and finish.

E. Samples: Submit actual sample items of proposed pulls, hinges, shelf standards, and locksets, demonstrating hardware design, quality, and finish.

F. LEED Report: Submit for wood products made from sustainably harvested wood, salvaged and reused wood, wood fabricated from recovered timber, and locally-sourced wood, as specified in Section 01 3515.

1.05 QUALITY ASSURANCE

A. Fabricator Qualifications: Company specializing in fabricating the products specified in this section with minimum five years of documented experience.
   1. Accredited participant in the specified certification program prior to the commencement of fabrication and throughout the duration of the project.

B. Quality Certification: Provide AWI Quality Certification Program inspection report and quality certification of completed work.
   1. Provide labels or certificates indicating that the work complies with requirements of AWS Grade or Grades specified.
   2. Prior to delivery to the site provide shop drawings with certification labels.
   3. Provide labels on each product when required by certification program.
   4. Upon completion of installation provide certificate certifying that the installation and products meet the specified requirements.
   5. Arrange and pay for inspections required for certification.
   6. Replace, repair, or rework all work for which certification is refused.

1.06 MOCK-UP

A. Provide mock-up of typical base cabinet, wall cabinet, and countertop, including hardware, finishes, and plumbing accessories.

B. Locate where directed.

C. Mock-up may remain as part of the Work.

1.07 DELIVERY, STORAGE, AND HANDLING

A. Protect units from moisture damage.

1.08 FIELD CONDITIONS

A. During and after installation of custom cabinets, maintain temperature and humidity conditions in building spaces at same levels planned for occupancy.

PART 2 PRODUCTS

2.01 MANUFACTURERS

A. K&Z Cabinets

B. Dave Bertino Cabinets

C. Stolo Cabinets

D. Substitutions: See Section 01 6000 - Product Requirements.

2.02 CABINETS

A. Quality Grade: Unless otherwise indicated provide products of quality specified by AWI//AWMAC/WI Architectural Woodwork Standards for Premium Grade.

B. Cabinets at Box Office, Concession
   1. Finish - Exposed Exterior Surfaces: Wood.
   2. Finish - Exposed Interior Surfaces: Wood.
   3. Finish - Concealed Surfaces: Manufacturer's option.
   4. Door and Drawer Front Edge Profiles: Square edge with thin applied band.
   5. Door and Drawer Front Retention Profiles: Fixed panel.
   6. Casework Construction Type: Type A - Frameless.
   7. Interface Style for Cabinet and Door: Style 2 - Finish Inset; reveal overlay.
   8. Grained Face Layout for Cabinet and Door Fronts: Flush panel.
      a. Premium Grade:
         1) Provide well-matched doors, drawer fronts and false fronts across multiple cabinet faces in one elevation.
   9. Cabinet Design Series: As indicated on the Drawings.
   10. Adjustable Shelf Loading: 50 lbs. per sq. ft..
   11. Cabinet Doors and Drawer Fronts: As indicated.
   12. Drawer Side Construction: Multiple-dovetailed.
   13. Drawer Construction Technique: Dovetail joints.

2.03 WOOD-BASED COMPONENTS

A. Wood fabricated from old growth timber is not permitted.

B. Provide sustainably harvested wood, certified or labeled as specified in Section 01 6000.

C. Provide wood harvested within a 500 mile radius of the project site.

2.04 COUNTERTOPS

A. Solid Surfacing: Specified in Section 12 36 00.

2.05 ACCESSORIES

A. Adhesive: Type recommended by fabricator to suit application.

B. Plastic Edge Banding: Extruded PVC, convex shaped; smooth finish; self locking serrated tongue; of width to match component thickness.
   1. Color: As selected by Architect from manufacturer's standard range.

C. Fasteners: Size and type to suit application.

D. Bolts, Nuts, Washers, Lags, Pins, and Screws: Of size and type to suit application; galvanized or chrome-plated finish in concealed locations and stainless steel or chrome-plated finish in exposed locations.

E. Concealed Joint Fasteners: Threaded steel.

2.06 HARDWARE

A. Hardware: BHMA A156.9, types as recommended by fabricator for quality grade specified.

B. Adjustable Shelf Supports: Standard side-mounted system using recessed metal shelf standards or multiple holes for pin supports and coordinated self rests, polished chrome finish, for nominal 1 inch spacing adjustments.

C. Drawer and Door Pulls: "U" shaped wire pull, steel with chrome finish, 4 inch centers.

D. Cabinet Locks: Keyed cylinder, two keys per lock, master keyed, steel with chrome finish.

E. Catches: Magnetic.

F. Drawer Slides:
   1. Type: Standard extension.
   2. Static Load Capacity: Commercial grade.
   3. Mounting: Side mounted.
   4. Stops: Integral type.
   5. Features: Provide self closing/stay closed type.
   6. Manufacturers:
      a. Accuride International, Inc; www.accuride.com.
      b. Knape & Vogt Manufacturing Company; www.knapeandvogt.com.

G. Hinges: European style concealed self-closing type, BHMA No. A 156.1, Grade 1, steel with polished finish.

2.07 FABRICATION

A. Assembly: Shop assemble cabinets for delivery to site in units easily handled and to permit passage through building openings.

B. Edging: Fit shelves, doors, and exposed edges with specified edging. Do not use more than one piece for any single length.

C. Fitting: When necessary to cut and fit on site, provide materials with ample allowance for cutting. Provide matching trim for scribing and site cutting.

D. Matching Wood Grain: Comply with requirements of quality standard for specified Grade.

2.08 SHOP FINISHING

A. Sand work smooth and set exposed nails and screws.

B. Finish work in accordance with AWI/AWMAC/WI Architectural Woodwork Standards, Section 5 - Finishing for Grade specified and as follows:
   1. Transparent:
      a. System - 1, Lacquer, Nitrocellulose.
      b. Sheen: Semigloss.

PART 3 EXECUTION

3.01 EXAMINATION

A. Verify adequacy of backing and support framing.

B. Verify location and sizes of utility rough-in associated with work of this section.

3.02 INSTALLATION

A. Set and secure custom cabinets in place, assuring that they are rigid, plumb, and level.

B. Use concealed joint fasteners to align and secure adjoining cabinet units.

C. Carefully scribe casework abutting other components, with maximum gaps of 1/32 inch. Do not use additional overlay trim for this purpose.

D. Secure cabinets to floor using appropriate angles and anchorages.

E. Countersink anchorage devices at exposed locations. Conceal with solid wood plugs of species to match surrounding wood; finish flush with surrounding surfaces.

3.03 ADJUSTING

A. Adjust installed work.

3.04 CLEANING

A. Clean casework, counters, shelves, hardware, fittings, and fixtures.

END OF SECTION

SECTION 07 14 00

FLUID-APPLIED WATERPROOFING

PART 1 GENERAL

1.01 SECTION INCLUDES

A. Fluid applied membrane waterproofing for use at deck and below-grade wall conditions.

B. Cant strips and other accessories.

C. Drainage panels and protection boards.

1.02 RELATED REQUIREMENTS

A. Section 03 30 00: Concrete substrate.

1.03 REFERENCE STANDARDS

A. 40 CFR 59, Subpart D - National Volatile Organic Compound Emission Standards for Architectural Coatings; U.S. Environmental Protection Agency; current edition.

B. ASTM D 412 - Standard Test Methods for Vulcanized Rubber and Thermoplastic Elastomers-Tension; 2006a.

C. ASTM D 429 - Standard Test Methods for Rubber Property--Adhesion to Rigid Substrates; 2003.

D. ASTM D 471 - Standard Test Method for Rubber Property--Effect of Liquids; 2006.

E. ASTM D 624 - Standard Test Method For Tear Strength of Conventional Vulcanized Rubber and Thermoplastic Elastomers; 2000 (Reapproved 2007).

F. ASTM D 746 - Standard Test Method for Brittleness Temperature of Plastics and Elastomers by Impact; 2007.

G. ASTM D 2240 - Standard Test Method For Rubber Property--Durometer Hardness; 2005.

H. ASTM D 5385 - Standard Test Method for Hydrostatic Pressure Resistance of Waterproofing Membranes; 1993 (Reapproved 2006).

I. ASTM E 96/E 96M - Standard Test Methods For Water Vapor Transmission of Materials; 2005.

1.04 SUBMITTALS

A. Product Data: Provide data for membrane and protection board.

B. Shop Drawings: Indicate special joint or termination conditions and conditions of interface with other materials.

C. Certificate: Certify that products meet or exceed specified requirements.

D. Manufacturer's Installation Instructions: Indicate special procedures.

E. Warranty: Submit manufacturer warranty and ensure forms have been completed in District's name and registered with manufacturer.

1.05 QUALITY ASSURANCE

A. Membrane Manufacturer Qualifications: Company specializing in waterproofing sheet membranes with ten years experience.

B. Installer Qualifications: Company specializing in performing the work of this section with

minimum 5 years experience.

1.06 FIELD CONDITIONS

A. Maintain ambient temperatures above 50 degrees F for 24 hours before and during application and until cured.

1.07 WARRANTY

A. Contractor shall correct defective Work within a five year period after Date of Substantial Completion; remove and replace materials concealing waterproofing at no cost to Owner.

B. Provide five year manufacturer warranty for waterproofing failing to resist penetration of water, except where such failures are the result of structural failures of building. Hairline cracking of concrete due to temperature change or shrinkage is not considered a structural failure.

PART 2 PRODUCTS

2.01 MANUFACTURERS

A. GacoWestern; www.gaco.com.

B. Equal products will be considered.

2.02 MEMBRANE MATERIALS

A. Fluid-Applied Waterproofing - General: Urethane rubber fluid-applied membrane.
   1. Product: LM-60H manufactured by Gaco Western.
   2. Primer: GacoFlex Epoxy Concrete Primer E-5320
   3. Flashing and Joint Reinforcing Fabric: GacoFlex NF-621 neoprene sheet flashing.

2.03 ACCESSORIES

A. Primer: two component type, compatible with membrane compound; as recommended by membrane manufacturer.

B. Protection Board: 1/8 inch (3 mm) thick biodegradable hardboard; with integral drainage channels.

PART 3 EXECUTION

3.01 EXAMINATION

A. Verify existing conditions before starting work.

B. Verify substrate surfaces are free of frozen matter, dampness, loose particles, cracks, pits, projections, penetrations, or foreign matter detrimental to adhesion or application of waterproofing system.

C. Verify that substrate surfaces are smooth, free of honeycomb or pitting, and not detrimental to full contact bond of waterproofing materials.

3.02 PREPARATION

A. Protect adjacent surfaces not designated to receive waterproofing.

B. Clean and prepare surfaces to receive waterproofing in accordance with manufacturer's instructions. Vacuum substrate clean.

C. Do not apply waterproofing to surfaces unacceptable to manufacturer.

D. Seal cracks and joints with sealant using methods recommended by sealant manufacturer.

E. Install cant strips at inside corners.

3.03 INSTALLATION

A. Apply primer at a rate of 1/2 gal/100 sq ft. Protect primer from rain or frost until dry.

B. Apply waterproofing in accordance with manufacturer's instructions to specified minimum thickness.

C. Extend membrane over cants and up intersecting surfaces at membrane perimeter minimum 6 inches (150 mm) above horizontal surface for first ply, lay subsequent plies in shingle fashion and lap per manufacturer’s recommendation.

D. Extend waterproofing material and flexible flashing into drain clamp flange, apply adequate coating of liquid membrane to assure clamp ring seal. Coordinate with drain installation.

E. Seal membrane and flashings to adjoining surfaces. Install counterflashing over all exposed edges.

3.04 INSTALLATION - DRAINAGE PANEL and PROTECTION BOARD

A. Place protection board directly against cooled membrane; butt joints. Scribe and cut boards around projections, penetrations, and interruptions.

3.05 FIELD QUALITY CONTROL

A. On completion of horizontal membrane installation, dam installation area in preparation for flood testing.

B. Flood to minimum depth of 1 inch (25 mm) with clean water. After 48 hours, inspect for leaks.

C. If leaking is found, remove water, repair leaking areas with new waterproofing materials as directed by Architect; repeat flood test. Repair damage to building.

3.06 PROTECTION

A. Do not permit traffic over unprotected or uncovered membrane.

END OF SECTION

SECTION 07 18 00

TRAFFIC COATINGS

PART 1 GENERAL

1.01 SECTION INCLUDES

A. Fluid-applied membrane coating for waterproofing and traffic surface

1.02 REFERENCE STANDARDS

A. ASTM D 412 - Standard Test Methods for Vulcanized Rubber and Thermoplastic Elastomers-Tension; 2006a.

B. ASTM E 96/E 96M - Standard Test Methods for Water Vapor Transmission of Materials; 2005.

1.03 SUBMITTALS

A. See Section 01 33 00 – Submittal Procedures.

B. Product Data: Include product characteristics and limitations. Identify dissolving solvents, fuels, and potential destructive compounds.

C. Maintenance Data: Include procedures for stain removal, repairing surface, and cleaning.

D. Warranty: Submit manufacturer warranty and ensure that forms have been completed in Owner's name and registered with manufacturer.

1.04 QUALITY ASSURANCE

A. Manufacturer Qualifications: Company specializing in manufacturing products of the type specified in this section, with not less than ten years of documented experience.

B. Applicator Qualifications: Company specializing in performing installation of traffic membrane,with minimum 5 years of experience.

1.05 DELIVERY, STORAGE, AND HANDLING

A. Maintain storage area at minimum ambient temperature of 60 to 80 degrees F.

B. Keep away from fire or open flame.

1.06 FIELD CONDITIONS

A. Do not install materials when temperature is below 50 degrees F or above 90 degrees F.

B. Maintain this temperature range, 24 hours before, during and 72 hours after application.

C. Restrict traffic from area where materials are being installed or are curing.

1.07 WARRANTY

A. Correct defective Work within a five year period after final acceptance.

B. Provide five year manufacturer warranty for acrylic traffic coating.
   1. Include coverage for delamination of system from substrate.

PART 2 PRODUCTS

2.01 MANUFACTURERS

A. Gaco Western, www.gaco.com

B. Equal products and systems will be considered.

2.02 TRAFFIC COATING

A. Pedestrian Coating: Brush/Roller-applied water-based acrylic membrane with fabric reinforcement and high strength concrete topping
   1. Finished Coating Thickness: 50 mils (1.3 mm), minimum.
   2. Manufacturers:
      a. GacoWestern; Product GacoFlex A-38.
      b. Substitutions: See Section 01 60 00 - Product Requirements.

2.03 MATERIALS

A. Membrane: Fluid applied acrylic; waterproof; conforming to the following:
   1. Tensile Strength (ASTM D 412): 2500 min psi.
   2. Moisture Vapor Permeability (ASTM E 96/E 96M): 0.06 perm inches.
   3. Hardness (ASTM D-2240): 90 Shore A
   4. Tear resistance (ASTM D-624 DIE C): 300 lb/in min
   5. Color: From manufacturer's standards.

B. Surfacing: hard (90 Rockwell Scale) non-crushable, non-extractable organic granule. Size 40 on 60..

C. Filler and Primer: As recommended by membrane manufacturer.

D. Sealant: two-component epoxy concrete sealer by membrane manufacturer.

PART 3 EXECUTION

3.01 EXAMINATION

A. Verify that substrate is ready to receive work, surface is clean, dry and free of substances that could adversely affect bond.

B. Do not begin work until concrete substrate has cured at least 28 days and moisture content is 16 percent or less.

3.02 PREPARATION

A. Clean substrate surface free of foreign matter. Refer also to manufacturer's instructions.

B. Protect adjacent surfaces.

3.03 INSTALLATION

A. Apply system materials in accordance with manufacturer's instructions.

B. Apply primer to prepared substrate at a rate of one gallon per 250 s.f. Allow drying time as recommended by the manufacturer.

C. When primer is tack free, apply one base coat of membrane by roller over fabric reinforcement to a total minimum dry film thickness of 12 mils (3/4 gallon per 100 s.f.).

D. Apply second base coat by roller to a total minimum dry film thickness of 12 mils (3/4 gallon per 100 s.f.).

E. When base coat is tack free, apply 2 coats of top coating to a minimum dry film thickness of 12 mils.

F. Finish to smooth surface sloped to drains. Cove at vertical surfaces.

G. Apply surfacing to top coat before set.

H. Apply sealant to junction of horizontal and intersecting surfaces to achieve watertight seal.

3.04 PROTECTION

A. Do not permit traffic over unprotected surfaces.

END OF SECTION

SECTION 07 21 00

THERMAL INSULATION

PART 1 GENERAL

1.01 SECTION INCLUDES

A. Batt insulation and vapor retarder in exterior wall and ceiling construction.

B. Batt insulation for filling perimeter window and door shim spaces and crevices in exterior wall and roof.

C. Rigid board insulation on exterior walls and roofs.

1.02 RELATED REQUIREMENTS

A. Section 01 3515 – LEED Certification Procedures

B. Section 05 40 00 - Cold-Formed Metal Framing: Supporting construction for batt insulation.

C. Section 07 84 00 - Firestopping.

D. Section 09 21 16 - Gypsum Board Assemblies: Acoustic insulation.

E. Section 09 22 16 – Non-Structural Metal Framing: Supporting construction for batt insulation.

1.03 REFERENCE STANDARDS

A. ASTM C 665 - Standard Specification for Mineral-Fiber Blanket Thermal Insulation for Light Frame Construction and Manufactured Housing; 2006.

B. ASTM C1289 – Standard Specification for Faced Rigid Cellular Polyisocyanurate Thermal Insulation Board, Type I, Class 2

B. ASTM E 84 - Standard Test Method for Surface Burning Characteristics of Building Materials; 2010.

C. ASTM E 136 - Standard Test Method for Behavior of Materials in a Vertical Tube Furnace At 750 Degrees C; 2009.

1.04 SUBMITTALS

A. See Section 01 33 00 - Submittal Procedures.

B. Product Data: Provide data on product characteristics, performance criteria, and product limitations.

C. Manufacturer's Installation Instructions: Include information on special environmental conditions required for installation and installation techniques.

D. Manufacturer's Certificate: Certify that products meet or exceed specified requirements.

E. LEED Report: Submit to indicated insulation product regionally extracted and produced (within 500 miles of construction site). Indicate percentage of post-consumer recovered materials.

1.05 FIELD CONDITIONS

A. Do not install insulation adhesives when temperature or weather conditions are detrimental to successful installation.

PART 2 PRODUCTS

2.01 MANUFACTURERS

A. Batt Insulation:
   1. Ecobatt, Knauf Insulation
   2. Manville Corp.
   3. Certain Teed Corp.
   4. Substitutions: See Section 01 60 00 - Product Requirements.

B. Rigid Board Insulation
   1. Dow Chemical Company
   2. GAF
   3. Owens-Corning, Inc.

2.02 APPLICATIONS

A. Insulation in Metal Framed Walls: Batt insulation with integral vapor retarder.

B Rigid Board Insulation: Rigid polyisocyanurate board insulation on exterior walls and roofs.

2.03 BATT INSULATION MATERIALS

A. Batt Insulation: ASTM C 665; preformed batt; friction fit, conforming to the following:
   1. Material: Glass or mineral fiber.
   2. Flame Spread Index: 25 or less, when tested in accordance with ASTM E 84.
   3. Smoke Developed Index: 450 or less, when tested in accordance with ASTM E 84.
   4. Combustibility: Non-combustible, when tested in accordance with ASTM E 136, except for facing, if any.
   5. Formaldehyde Content: Zero.
   6. Thermal Resistance: R of 19 (61/4”).Exterior walls and ceilings where shown.
   7. R-11 (3 1/2") at acoustical walls
   8. Facing: Kraft facing.

2.04 RIGID BOARD INSULATION

A. Board Insulation: ASTM C1289; Glass-fiber reinforced polyisocyanurate faced with embossed acrylic-coated aluminum on both sides and conforming to the following:
   1. Thermal Resistance: ASTM C518; R-value 6.5/inch
   2. Compressive Strength: ASTM D1621 25 psi
   3. Flexural Strength: ASTM C203 55 psi
   4. Water Absorption: ASTM C209 less than 0.05% by volume
   5. Water Vapor Permanence: ASTM E96 less than 0.03 perms
   6. Maximum Use Temperture: 250 deg. F
   7. Surface Burning Characteristics ASTM E84: Flame spread: 25; Smoke developed: less than 450.

2.05 ACCESSORIES

A. Tape: Bright aluminum self-adhering type, mesh reinforced, 2 inch (50 mm) wide.

B. Nails or Staples: Steel wire; electroplated, or galvanized; type and size to suit application.

C Adhesive: Manufacturer’s applicable adhesive.

PART 3 EXECUTION

3.01 EXAMINATION

A. Verify that substrate, adjacent materials, and insulation materials are dry and that substrates are ready to receive insulation.

B. Verify substrate surfaces are flat, free of honeycomb, fins, irregularities, or materials or substances that may impede adhesive bond.

3.02 BATT INSTALLATION

A. Install insulation in accordance with manufacturer's instructions.

B. Install in exterior wall and ceiling spaces without gaps or voids. Do not compress insulation.

C. Trim insulation neatly to fit spaces. Insulate miscellaneous gaps and voids.

D. Fit insulation tightly in cavities and tightly to exterior side of mechanical and electrical services within the plane of the insulation.

E. Staple or nail facing flanges in place at maximum 6 inches (150 mm) on center.

F. Tape seal butt ends, lapped flanges, and tears or cuts in membrane.

G. At metal framing, place vapor retarder on warm side of insulation; lap and seal sheet retarder joints over member face.

H. Tape seal tears or cuts in vapor retarder.

I. Extend vapor retarder tightly to full perimeter of adjacent window and door frames and other items interrupting the plane of the membrane. Tape seal in place.

3.03 BOARD INSULATION

A. Apply adhesive to back of boards for installation on exterior walls.

B. Install horizontally on walls. Stagger vertical joints in a running bond.

C. Butt edges and ends tightly and seal joints per manufacturer’s recommendations. Extend boards over expansion joints.

3.03 PROTECTION

A. Do not permit installed insulation to be damaged prior to its concealment.

END OF SECTION

SECTION 07 25 00

WEATHER RESISTIVE BARRIERS

PART 1 - GENERAL

1.01 SECTION INCLUDES

A. Weather barrier membrane
B. Seam Tape
C. Flashing
D. Fasteners

1.02 REFERENCES

A. ASTM International
   1. ASTM C920; Standard Specification for Elastomeric Joint Sealants
   2. ASTM C1193; Standard Guide for Use of Joint Sealants
   3. ASTM D882; Test Method for Tensile Properties of Thin Plastic Sheeting
   4. ASTM D1117; Standard Guide for Evaluating Non-woven Fabrics
   5. ASTM E84; Test Method for Surface Burning Characteristics of Building Materials
   6. ASTM E96; Test Method for Water Vapor Transmission of Materials
   7. ASTM E1677; Specification for Air Retarder Material or System for Framed Building Walls
   8. ASTM E2178; Test Method for Air Permeance of Building Materials
B. AATCC – American Association of Textile Chemists and Colorists
   1. Test Method 127 Water Resistance: Hydrostatic Pressure Test
C. TAPPI
   1. Test Method T-410; Grams of Paper and Paperboard (Weight per Unit Area)
   2. Test Method T-460; Air Resistance (Gurley Hill Method)

1.3 SUBMITTALS

A. Refer to Section 01 33 00 Submittal Procedures.
B. Product Data: Submit manufacturer current technical literature for each component.
C. Samples: Weather Barrier Membrane, minimum 8-1/2 inches by 11 inch.
D. Quality Assurance Submittals
   1. Design Data, Test Reports: Provide manufacturer test reports indicating product compliance with indicated requirements.
   2. Manufacturer Instructions: Provide manufacturer's written installation instructions.
   3. Manufacturer's Field Service Reports: Provide site reports from authorized field service representative, indicating observation of weather barrier assembly installation.
E. Closeout Submittals
   1. Refer to Section 01 70 00 Project Closeout.
   2. Weather Barrier Warranty: Manufacturer's executed warranty form with authorized signatures and endorsements indicating date of Substantial Completion.

1.4 QUALITY ASSURANCE

A. Qualifications

1. Installer shall have experience with installation of commercial weather barrier assemblies under similar conditions.
2. Installation shall be in accordance with weather barrier manufacturer's installation guidelines and recommendations.
3. Source Limitations: Provide commercial weather barrier and accessory materials produced by single manufacturer.

B. Mock-up

1. Install mock-up using approved weather barrier assembly including fasteners, flashing, tape and related accessories per manufacturer's current printed instructions and recommendations.
   a. Mock-up size: 10 feet x 10 feet.
   b. Mock-up Substrate: Match wall assembly construction, including window opening.
   c. Mock-up may remain as part of the work.
2. Contact manufacturer's designated representative prior to weather barrier assembly installation, to perform required mock-up visual inspection and analysis as required for warranty.

C. Pre-installation Meeting

1. Hold a pre-installation conference, two weeks prior to start of weather barrier installation. Attendees shall include Contractor, Architect, Engineer, Installer, Owner's Representative, and Weather Barrier Manufacturer's Designated Representative.
2. Review all related project requirements and submittals, status of substrate work and preparation, areas of potential conflict and interface, availability of weather barrier assembly materials and components, installer's training requirements, equipment, facilities and scaffolding, and coordinate methods, procedures and sequencing requirements for full and proper installation, integration and protection.

1.5 DELIVERY, STORAGE AND HANDLING

A. Refer to Section 01 60 00 Product Requirements.

B. Deliver weather barrier materials and components in manufacturer's original, unopened, undamaged containers with identification labels intact.

C. Store weather barrier materials as recommended by weather barrier manufacturer.

1.6 SCHEDULING

A. Review requirements for sequencing of installation of weather barrier assembly with installation of windows, doors, louvers and flashings to provide a weather-tight barrier assembly.

B. Schedule installation of weather barrier materials and exterior cladding within nine months of weather barrier assembly installation.

1.7 WARRANTY

A. Refer to General Conditions.

B. Special Warranty

1. Special weather-barrier manufacturer's warranty for weather barrier assembly for a period of

ten (10) years from date of final weather barrier installation.

2. Approval by weather barrier manufacturer for warranty is required prior to assembly installation.

PART 2 - PRODUCTS

2.1 MANUFACTURERS

A. DuPont Building Innovations; Tyvek, Commercial Wrap
B. Dow Chemical Co., Weathermate
C. Or equal.

2.2 MATERIALS

A. Performance Characteristics:
   1. Air Penetration: 0.001 cfm/ft^2 at 75 Pa, when tested in accordance with ASTM E2178. Type I per ASTM E1677.
   2. Water Vapor Transmission: 28 perms, when tested in accordance with ASTM E96, Method B.
   3. Water Penetration Resistance: 280 cm when tested in accordance with AATCC Test Method 127.
   4. Basis Weight: 2.7 oz/yd^2, when tested in accordance with TAPPI Test Method T-410.
   5. Air Resistance: Air infiltration at >1500 seconds, when tested in accordance with TAPPI Test Method T-460.
   6. Tensile Strength: 38/35 lbs/in., when tested in accordance with ASTM D882, Method A.
   7. Tear Resistance: 12/10 lbs., when tested in accordance with ASTM D1117.
   8. Surface Burning Characteristics: Class A, when tested in accordance with ASTM E 84. Flame Spread: 10, Smoke Developed: 10.

2.3 ACCESSORIES

A. Seam Tape: 3 inch wide, manufacturer's tape for commercial applications.
B. Fasteners:
   1. Manufacturer's fasteners ASTM F 1667: 1-5/8 inch rust resistant screw with 2-inch diameter plastic cap or manufacturer approved 1-1/4" or 2" metal gasketed washer
C. Sealants
   1. Provide sealants that comply with ASTM C920, elastomeric polymer sealant to maintain watertight conditions. Refer also to Section 07 90 05 Sealants.
   2. Products:
      a. Tremco 830
      b. Tremco Butyl
      c. Sealants recommended by the weather barrier manufacturer.
D. Adhesives:
   1. Provide adhesive recommended by weather barrier manufacturer.
   2. Products:
      a. Liquid Nails® LN-109
      b. Polyglaze® SM 5700

c. Denso Butyl Liquid
d. 3M High Strength 90
e. SIA 655
f. Adhesives recommend by the weather barrier manufacturer.

E. Primers:
1. Provide flashing manufacturer recommended primer to assist in adhesion between substrate and flashing.
2. Products:
a. 3M High Strength 90
b. Denso Butyl Spray
c. SIA 655
d. Permagrip 105
e. ITW TACC Sta' Put SPH
f. Primers recommended by the flashing manufacturer

F. Flashing
1. Flexible flashing: flexible membrane flashing materials for window openings and penetrations.
2. Refer also to Section 07 60 00 Flashing and Sheet Metal and the drawing details.

PART 3 - EXECUTION

3.1 EXAMINATION

A. Verify substrate and surface conditions are in accordance with weather barrier manufacturer recommended tolerances prior to installation of weather barrier and accessories.

3.2 INSTALLATION – WEATHER BARRIER

A. Install weather barrier over exterior face of exterior wall substrate in accordance with manufacturer recommendations.
B. Install weather barrier prior to installation of windows and doors.
C. Start weather barrier installation at a building corner, leaving 6-12 inches of weather barrier extended beyond corner to overlap.
D. Install weather barrier in a horizontal manner starting at the lower portion of the wall surface with subsequent layers installed in a shingling manner to overlap lower layers. Maintain weather barrier plumb and level.
E. Sill Plate Interface: Extend lower edge of weather barrier over sill plate interface 3-6 inches. Secure to foundation with elastomeric sealant as recommended by weather barrier manufacturer.
F. Window and Door Openings: Extend weather barrier completely over openings.
G. Overlap weather barrier
1. Exterior corners: minimum 12 inches.
2. Seams: minimum 6 inches.
H. Weather Barrier Attachment:
1. Attach weather barrier to studs through exterior sheathing. Secure using weather barrier manufacturer recommended fasteners, space 12 -18 inches vertically on center along stud line, and 24 inch on center, maximum horizontally.

I. Apply 4 inch by 7 inch piece of flashing to weather barrier membrane prior to the installation cladding anchors.

3.3 SEAMING

A. Seal seams of weather barrier with seam tape at all vertical and horizontal overlapping seams.

B. Seal any tears or cuts as recommended by weather barrier manufacturer.

3.4 OPENING PREPARATION

A. Flush cut weather barrier at edge of sheathing around full perimeter of opening.

B. Cut a head flap at 45-degree angle in the weather barrier at window head to expose 8 inches of sheathing. Temporarily secure weather barrier flap away from sheathing with tape.

3.5 FLASHING (Refer also to Drawings)

A. Cut 12-inch wide flexible flashing a minimum of 12 inches longer than width of sill rough opening. Apply primer as required by manufacturer.

B. Cover horizontal sill by aligning flashing edge with inside edge of sill. Adhere to rough opening across sill and up jambs a minimum of 6 inches. Secure flashing tightly into corners by working in along the sill before adhering up the jambs.

C. Fan flashing at bottom corners onto face of wall. Firmly press in place. Mechanically fasten fanned edges.

D. Apply 9-inch wide strips of flashing at jambs. Align flashing with interior edge of jamb framing. Start at head of opening and lap sill flashing down to the sill.

E. Spray-apply primer to top 6 inches of jambs and exposed sheathing.

F. Install flexible flashing at opening head using same installation procedures used at sill. Overlap jamb flashing a minimum of 2 inches.

G. Coordinate flashing with window installation.

H. On exterior, install backer-rod in joint between window frame and flashed rough framing. Apply sealant at jambs and head, leaving sill unsealed. Apply sealants in accordance with sealant manufacturer's instructions and ASTM C 1193.

I. Position weather barrier head flap across head flashing. Adhere using 4-inch wide flashing over the 45-degree seams.

J. Tape top of window in accordance with manufacturer recommendations.

K. On interior, install backer rod in joint between frame of window and flashed rough framing. Apply sealant around entire window to create air seal. Apply sealant in accordance with sealant manufacturer's instructions.

3.6 PROTECTION

A. Protect installed weather barrier from damage.

END OF SECTION

SECTION 07 32 13

CLAY ROOF TILES

1. GENERAL

1.1 SECTION INCLUDES

A. Formed clay roofing tiles.

B. Underlayment, valley, and ridge protections, nailers.

C. Associated metal flashings.

D. Roof tile adhesive set system.

1.2 RELATED SECTIONS

A. Section 07 60 00 – Sheet Metal Flashing and Trim.

1.3 REFERENCES

A. ASTM D224 – Smooth-Surfaced Asphalt Roll Roofing (Organic Felt).

B. ASTM D226 – Asphalt-Saturated Organic Felt Used in Roofing and Waterproofing.

C. SMACNA – Architectural Sheet Metal Manual.

D. UL 580 – Tests for Wind Uplift Resistance of Roof Assemblies.

E. UL 790 – Tests for Fire Resistance of Roof Covering Materials and UBC 15-2.

F. UBC 15.5 – Roof Tile.

G. ICBO ER 5595 Two Component Polyurethane Foam Adhesive materials and installation for clay or concrete tile roof systems

1.4 SUBMITTALS FOR REVIEW

A. Product Data: Provide tile properties, configurations, special shapes, and securement methods.

B. Samples: Submit two tile units, each illustrating color, surface finish and texture, tile configuration.

Manufacturer's Instructions: Indicate installation techniques.

1.5 QUALITY ASSURANCE

A. Manufacturer: Company specializing in manufacturing the Products specified in this section with minimum ten years experience.

B. Installer: company specializing in performing the work of this section with minimum of five (5) years experience and approved by the tile manufacturer.

C. Tile shall conform to UBC Standard 15.5.

1.6 REGULATORY REQUIREMENTS

A. Conform to CAC 150 and UL 580 wind uplift and UL 790 and CAC 1505 fire resistance and Title 24, Part 2.

1.7 DELIVERY, STORAGE, AND PROTECTION

A. Accept tile on site in packaging. Inspect for damage.

B. Verify with Owner an approved location for on-site storage of material.

1.8 WARRANTY

A. Correct defective work within a five (5) year period after Substantial Completion.

2.0 PRODUCTS

2.1 MANUFACTURERS

A. Clay Tile Manufacturers: M.C.A. Tile, or approved equal.

B. Underlayment: GAF, under roof tile leak barrier membrane.
C. Adhesive: Polyfoam Products Inc., Polypro AH160

2.2 TILE MATERIALS

A. Clay Tile: Two piece Classic Tapered Mission by M.C.A. Tile, as manufactured special shapes to suit valley, booster, rake, eave, birdstop and other conditions. Color shall be Natural Red, Energy Star and Cool Roof rated.

1. Birdstops shall be plain with no imprinted design.

B. Clay Ridge Tile: Straight barrel mission, as manufactured by M.C.A. Color shall match with other tile.

C. Mortar: Portland cement, sand and water, natural color.

2.3 SHEET MATERIALS

A. Underlayment: GAF under roof tile leak barrier, one layer on slopes 3:12 or greater and two layers on slopes less than 3:12.
1. Fasteners: Manufacturer's annular ring shank roofing nails.

2.4 ADHESIVE

A. Two Component Polyurethane Roof Tile Adhesive: PolyPro AH160 polyurethane foam with the following properties:
1. Density conforming to ASTM D 1622
2. Compressive strength ASTM D 1621
3. Tensile Strength ASTM D 1623
4. Water Absorption ASTM D 2842
5. Dimensional Stability ASTM D 2126
6. Surface Burning Characteristics ASTM E 84

2.5 ACCESSORIES

A. Wood Nailers: Softwood lumber, Douglas Fir species, preservative treated.

2.6 FLASHING MATERIALS

A. Sheet Flashings: As specified in Section 07620.

3.0 EXECUTION

3.1 EXAMINATION

A. Verify deck substrate under provisions of Section 01039.

B. Verify that roof penetrations are in place and flashed to deck surface.

C. Verify roof openings are correctly framed prior to installing work of this section.

D. Verify that deck is of sufficient thickness to accept fasteners.

E. Verify deck surfaces are dry, unfrozen, free of ridges, warps, or voids.

F. Verify roof deck material is not damaged from water, rot or termites.

1. Report any observed damage to the Architect prior to installation.

3.2 PREPARATION

A. Broom clean deck surfaces.

B. Verify deck meets requirements of underlayment manufacturer.

3.3 INSTALLATION – UNDERLAYMENT

A. Place two plies of underlayment over full roof area, with ends and edges weather lapped minimum 6 inches. Stagger end laps of each consecutive layer. Nail in place.

B. Install underlayment perpendicular to slope of roof.

C. Install as per manufacturer's published requirements.

3.4 INSTALLATION – VALLEY PROTECTION

A. Place one layer of underlayment (full width), centered over valleys. Weather lap joints as required by manufacturer. Nail in place minimum 18 inches oc, 1 inch from edges.

3.5 INSTALLATION – METAL FLASHING

A. Install flashings in accordance with manufacturer's instructions and Section 07620.

B. Weather lap joints minimum of 4 inches and seal weather tight with plastic cement.

C. Secure in place with nails at 8 inches oc. Conceal fastenings.

D. Finish and seal work projecting through or mounted on roofing with plastic cement, weather tight.

3.6 TILE INSTALLATION

A. Tile Installation: PolyPro AH160 Two-component Polyurethane Roof Tile Adhesive:

1. Slopes up to and including 6:12: Eave course may be fastened for alignment purposes only (not required).

2. Two piece barrel tile with slopes up to and including 6:12: Eave course may be fastened for alignment purposes only (not required).

3. Apply Stormcheck Weather Block sealer by spray method, to uniform monolithic density without voids.

4. Apply using the paddy placement details in accordance with the system performance requirements specified in the compliance reports of the authorities having jurisdiction.

5. Place tile over freshly applied adhesive and prior to adhesive skinning.

6. Place tile square with building lines and parallel with roof slope. Place eave closure pieces as required.

7. Install hip and ridge tile in accordance with the system performance requirements specified in the compliance reports of the authorities having jurisdiction.

8. Coordinate installation of roof mounted components or work projecting through roof with weather tight placement of counter flashings.

9. Do not expose adhesive to UV rays. Cut away any exposed foam and cover with mortar or coat with a good quality acrylic paint suitable for application on polyurethane foam.

10. Complete installation as required to provide weather tight service

3.7 CLEANING

A. Remove all broken tile, debris and excess tile from roof.

B. Sweep cut tiles clean.

3.8 REPAIR AND REPLACEMENT

A. Damaged Tile:

1. Break out damaged roof tile.

2. Repair torn underlayment.

3. Remove fastener or drive fastener flush to underlayment surface.

4. Repair torn underlayment.

5. Apply Polypro AH160 or Polyset ONE on tile in course below replacement tile and onto underlayment as required in the adhesive manufacturers compliance report.

6. Immediately set replacement tile in position assuring proper contact.

B. Damaged Small Valley and Hip Cuts:

1. Apply a minimum of 3/8 inch (10 mm) by 2 inch (51 mm) bead of approved adhesive at head of cut tile.

2. Immediately set tile in course above in position assuring proper contact.

3.9 PROTECTION

A. Protect installed products until completion of project.

B. Touch-up, repair or replace damaged products before Substantial Completion.

END OF SECTION

SECTION 07 57 00
COATED FOAMED ROOFING

PART 1 GENERAL

1.01 SECTION INCLUDES

A. Foamed-in-place insulation.

B. Protective overcoat.

1.02 RELATED REQUIREMENTS

A. Section 05 31 00 - Steel Decking.

B. Section 06 10 00 - Rough Carpentry: Wood nailers and curbs.

C. Section 07 60 00 - Sheet Metal Flashing and Trim: Perimeter flashings; counter flashings to roof penetrations.

D. Section 07 90 05 - Joint Sealers.

1.03 REFERENCE STANDARDS

A. ASTM C 177 - Standard Test Method for Steady-State Heat Flux Measurements and Thermal Transmission Properties by Means of the Guarded-Hot-Plate Apparatus; 2004.

B. ASTM C 518 - Standard Test Method for Steady-State Thermal Transmission Properties by Means of the Heat Flow Meter Apparatus; 2004.

C. ASTM D 412 - Standard Test Methods for Vulcanized Rubber and Thermoplastic Elastomers--Tension; 2006a.

D. ASTM D 1621 - Standard Test Method for Compressive Properties Of Rigid Cellular Plastics; 2010.

E. ASTM D 1622 - Standard Test Method for Apparent Density of Rigid Cellular Plastics; 2008.

F. ASTM D 1623 - Standard Test Method for Tensile And Tensile Adhesion Properties of Rigid Cellular Plastics; 2009.

G. ASTM D 2126 - Standard Test Method for Response of Rigid Cellular Plastics to Thermal and Humid Aging; 2009.

H. ASTM D 2842 - Standard Test Method for Water Absorption of Rigid Cellular Plastics; 2006.

I. ASTM D 6226 - Standard Test Method for Open Cell Content of Rigid Cellular Plastics; 2005.

J. ASTM E 84 - Standard Test Method for Surface Burning Characteristics of Building Materials; 2010.

K. ASTM E 96/E 96M - Standard Test Methods for Water Vapor Transmission of Materials; 2005.

L. FM P7825 - Approval Guide; Factory Mutual Research Corporation; current edition.

M. UL 790 - Standard for Standard Test Methods for Fire Tests of Roof Coverings; Underwriters Laboratories Inc.; Current Edition, Including All Revisions.

1.04 ADMINISTRATIVE REQUIREMENTS

A. Preinstallation Meeting: Convene one week before starting work of this section.
   1. Review installation procedures and coordination required with related work.

1.05 SUBMITTALS

A. Product Data: Provide data on foam insulation and overcoat, physical and chemical properties, preparation of substrate required, product limitations, and cautionary requirements.

B. Samples: Submit two samples, 4x4 inch in size, illustrating illustrating color and texture.

C. Test Reports: Provide test reports indicating that specified requirements are achieved by the products being supplied.

D. Manufacturer's Instructions: Indicate installation requirements and procedures.

F. Manufacturer's Certificate: Certify that products meet or exceed specified requirements.

G. Warranty: Submit manufacturer warranty and ensure that forms have been completed in Owner's name and registered with manufacturer.

1.06 QUALITY ASSURANCE

A. Manufacturer Qualifications: Company specializing in manufacturing products specified in this section, with not less than three years of documented experience.

B. Installer Qualifications: Company specializing in performing the work of this section with minimum 5 years of experience.

C. Work of this section to conform to manufacturer's instructions.

1.07 REGULATORY REQUIREMENTS

A. Conform to applicable code for fire resistance ratings of overcoat.

B. UL 790: Class A Fire Hazard Classification.

1.08 DELIVERY, STORAGE, AND HANDLING

A. Protect stored products from ambient temperatures below 75 degrees F.

1.09 FIELD CONDITIONS

A. Do not install foam insulation under the following conditions:
   1. When ambient temperature is below 50 degrees F or above 110 degrees F.
   2. When relative humidity is above 80 percent.

B. Do not install overcoat under the following conditions:
   1. When ambient temperature is below 50 degrees F.
   2. When wind velocity is above 10 mph.
   3. During precipitation.

1.10 WARRANTY

A. Correct defective Work within a five year period after Date of Substantial Completion.

B. Provide coverage of roofing system for delamination of bond.

PART 2 PRODUCTS

2.01 MANUFACTURERS

A. Coated Foamed Roofing:

   1. Ari-thane Foam Products, Inc., www.arithane.com; Basis of Design: SWD 525b with SWD 1929F Kool Kote (Roof Coating).
   1. Henry Company; Product Permax: www.henry.com.
   2. Neogard Division of Jones-Blair Company; Product: Permathane II FR: www.neogard.com.
   3. Substitutions: Or equal

2.02 FOAM INSULATION MATERIALS

A. Foam Insulation: Polyurethane type, as follows:
   1. Thermal Conductivity: When tested in accordance with ASTM C 177.
   2. Compressive Strength: ASTM D 1621; 40 psi.
   3. Density: ASTM D 1622; 3 lb/cu ft.

4. Surface Burning Characteristics: Flame spread/Smoke developed index of 25/250, when tested in accordance with ASTM E 84.

B. Substrate Primer: As required by manufacturer.

2.03 OVERCOAT MATERIALS

A. Overcoat: Single component water-based acrylic, elastomeric coating, color as selected.

2.04 ACCESSORIES

A. Cant Strips: Wood, pressure preservative treated.

B. Sheet Vapor Retarder: Conform to UL 790 and NRCA requirements. Provide asphalt-saturated organic felt, ASTM D226, Type I or II.

PART 3 EXECUTION

3.01 EXAMINATION

A. Schedule work after all penetrations through roof are complete and perimeter conditions are ready to receive roof system.

B. Verify that deck surface is smooth and dry and deck joints do not exceed 1/16 inch.

C. Verify that concrete substrate is cured with moisture content not exceeding 12 percent.

3.02 PREPARATION - CONCRETE DECK

A. Fill surface honeycomb and variations with latex filler.

B. Remove materials or substances that will interfere with total adhesion of foam insulation to substrate.

C. Mask off adjacent surfaces that are not scheduled to receive foam.

3.03 INSULATION INSTALLATION

A. Apply primer and foam insulation in accordance with manufacturer's instructions.

B. Place insulation to a thickness to achieve an average thermal resistance R value of 30.

C. Extend foam 2 inches up vertical intersections, fillet insulation and feather out. Form a cant of foam at perpendicular interruptions.

D. Surface Flatness: 1/4 inch per 10 foot measured with a straight edge.

E. Apply foam to permit first coat of overcoat application on same day. If this time limit is exceeded, prepare foam skin surface in accordance with manufacturer's instructions.

3.04 FLASHINGS AND ACCESSORIES

A. Coordinate installation of control joints.

B. Seal flashings and flanges of items penetrating membrane.

3.05 OVERCOAT INSTALLATION

A. Install overcoat in accordance with manufacturer's instructions.

B. Prepare and seal penetrations through roof with sealant.

C. Apply overcoat in two coats with dissimilar colors for each coat to a total dry film thickness of 20 mils minimum.

3.06 FIELD QUALITY CONTROL

A. Testing will include verification of insulation properties, thickness, coverage of overcoat, number of coats, and color.

3.07 CLEANING

A. Remove excess insulation or overcoat from finished surfaces.

B. In areas where finished surfaces are soiled by work of this section, consult manufacturer of surfaces for cleaning advice and conform to their documented instructions.

3.08 PROTECTION

A. Ensure roof surface is free of traffic for minimum three days after overcoat application.

END OF SECTION

SECTION 07 60 00

FLASHING AND SHEET METAL

PART 1 - GENERAL

1.01 SUMMARY: Division 1 applies to this Section. Provide flashing and sheet metal items, complete.

A. Work Included:

1. Reglet and counterflashing assemblies.
2. Miscellaneous metal flashing and counterflashing as required, except where provided by mechanical and electrical trades.
3. Drip flashings.
4. Shop priming and field touch-up.
5. Caulking.

B. Related Work:

1. Sheet metal flashings in connection with plumbing, air conditioning, and electrical.
2. Metal accessories for drywall, lathing, and acoustical treatments.
3. Finish painting.
4. Sleeves for embedded items.
5. Steel decking.

1.02 SUBMITTALS: Submit Shop Drawings for fabricated sheet metal showing details, methods of joining, anchoring and fastening, thicknesses and gages of metals, concealed reinforcement, expansion joint details, sections, and profiles.

Submit manufacturer's information/data sheets or a letter from the manufacturer indicating the amount of recycled content, post consumer and post industrial in the product.

1.03 QUALITY ASSURANCE: Drawings and requirements specified govern. Conform to the current "Architectural Sheet Metal Manual" published by Sheet Metal and Air Conditioning Contractors National Association, Inc. (SMACNA) for conditions not indicated or specified and for general fabrication of sheet metal items.

PART 2 - PRODUCTS

2.01 BASIC MATERIALS:

Galvanized steel:	ASTM A525 with coating G90, mill phosphatized for paint adhesion, 24 gage unless otherwise shown or specified.
Aluminum extrusions: .	ASTM B221, 6063-T5 or T6.
Aluminum sheet:	ASTM B209, Alclad or 5052 alloy.
Stainless steel:	ASTM A167, Type 302 or 304, 18-8.
Solder:	ASTM B32, type required for welding conditions.
Solder flux:	Standard brand non-corrosive acid-base type.
Fasteners:	Zinc or cadmium coated steel or stainless steel.
Felt: .....….....	ASTM D226, 15-pound type.

Primer: ..... Galvanized metal primer approved for use under Section 09900 with manufacturer's pretreatment materials.
Sealant: ..... Conforming to Section 07920.

2.02 RELATED MATERIALS:

A. Reglets and Counterflashings: Fry Reglet Corp. flashing systems complete with unions and preformed corners of necessary types for particular locations, of 24 gage galvanized iron, or approved equals by Metco Metal Products Co., Pacific Loxtite Flashing Co., National Cornice Works, Redco, Lane-Air, or equal. Use a single manufacturer's products, equivalent to Type CO at concrete, Type MA at masonry, Type ST at plaster, or Type SM, as required by Drawings and details.

2.03 GENERAL FABRICATION REQUIREMENTS: Fabricate items to avoid distortion and overstressing of fastenings due to expansion and contraction. Provide expansion joints where necessary in continuous runs of sheet metal, constructed watertight and spaced 30-feet apart maximum. Lock and solder corners and blind hem exposed edges. Make joints with 4" lap and solder unless otherwise shown or specified. Fill single lock seams with sealant where soldering is infeasible. Run flanges 4" minimum onto roof and wall surfaces. Fabricate sheet metal items in nominal 8-foot lengths unless otherwise shown or specified.

A. Soldering: Do soldering slowly immediately after application of flux, all seams showing evenly flowed solder. Clean and neutralize finished soldering.

B. Shop Priming: Clean completed items, apply pretreatment, and prime all exposed surfaces with specified primer.

C. Joints In Sheet Aluminum: Lock all joints, rivet where required for strength, and fill joints with polymer sealant supplied or recommended by the parent metal manufacturer. Soldering is not permitted.

2.04 FABRICATED ITEMS: Of 24 gage galvanized iron unless otherwise indicated or specified.

A. Drip Flashings: Hemmed exposed edges, 1-piece lengths.

B. Roof Pipe Flashings: Provide welded seam 4 pound lead flashings. Field fabricated flashings shall also be welded.

C. Miscellaneous Flashing: Unless otherwise indicated, miscellaneous flashing shall be fabricated of galvanized iron. Exterior doors and windows, unless covered by overhangs shall be provided with 22 gage galvanized iron drip flashing as detailed.

PART 3 - EXECUTION

3.01 INSTALLATION REQUIREMENTS: Install sheet metal items as shown, according to approved submittals, and as required to complete the entire Work. Securely fasten and assemble, and make watertight and weathertight.

A. Coordination: Coordinate sheet metal items in connection with roofing for correct installation, and furnish in sufficient time to avoid delay in roofing construction. Install roofing sheet metal simultaneously with roofing.

B. Calking: Provide sealant calking as indicated and as required to seal and complete Work of this Section. Conform to Section 07 90 05.

C. Isolation: Isolate sheet metal from contact with concrete or masonry with one layer of roofing felt or, where shown, vinyl underlayment, except embedded items. Isolate all aluminum from dissimilar metals and materials other than non-magnetic stainless steel. At metals, apply a heavy coat of alkali-resistant bituminous paint; or coat both surfaces with a fluid-applied neoprene or urethane membrane material. Conceal all isolation in the finished Work.

3.02 COMPLETION: Examine installed sheet metal items, water test if necessary or directed, and correct damaged or defective items.

END OF SECTION

SECTION 07 72 33
ROOF ACCESSORIES

PART 1 GENERAL

1.01 SECTION INCLUDES

A. Roof hatches.

1.02 RELATED REQUIREMENTS

A. Section 07 57 13 - Sprayed Polyurethane Foam Roofing

1.03 REFERENCE STANDARDS

A. ASTM A 653/A 653M - Standard Specification for Steel Sheet, Zinc-Coated (Galvanized) or Zinc-Iron Alloy-Coated (Galvannealed) by the Hot-Dip Process; 2009a.

B. ASTM A 792/A 792M - Standard Specification for Steel Sheet, 55% Aluminum-Zinc Alloy-Coated by the Hot-Dip Process; 2009a.

C. FM P7825 - Approval Guide; Factory Mutual Research Corporation; current edition.

D. UL (BMD) - Building Materials Directory; current edition.

1.04 SUBMITTALS

A. See Section 01 3000 - Administrative Requirements, for submittal procedures.

B. Product Data: Manufacturer's data sheets on each product to be used.
   1. Preparation instructions and recommendations.
   2. Storage and handling requirements and recommendations.
   3. Installation methods.
   4. Maintenance requirements.

1.05 DELIVERY, STORAGE, AND HANDLING

A. Store products in manufacturer's unopened packaging until ready for installation.

B. Store products under cover and elevated above grade.

PART 2 PRODUCTS

2.01 ROOF HATCHES

A. Manufacturers - Roof Hatches:
   1. Bilco Company; Type S (ladder access, standard size, solid cover): www.bilco.com.
   2. Dur-Red Products: www.dur-red.com.
   3. Milcor by Commercial Products Group of Hart & Cooley, Inc: www.milcorinc.com.

B. Roof Hatches: Factory-assembled steel frame and cover, complete with operating and release hardware.
   1. Style: Provide flat metal covers unless otherwise indicated.
   2. Mounting: Provide frames and curbs suitable for mounting on flat roof deck.
   3. Size(s): As indicated on drawings; single-leaf style unless indicated as double-leaf.
   4. For Ladder Access: Single leaf; 30 by 36 inches.

C. Frames/Curbs: One-piece curb and frame with integral cap flashing to receive roof flashings; extended bottom flange to suit mounting.
   1. Material: Galvanized steel, 14 gage, 0.0747 inch thick.
   2. Finish: Factory prime paint.
   3. Insulation: 1 inch rigid glass fiber, located on outside face of curb.
   4. Curb Height: 12 inches from finished surface of roof, minimum.

D. Metal Covers: Flush, insulated, hollow metal construction.
   1. Capable of supporting 40 psf live load.

2. Material: Galvanized steel; outer cover 14 gage, 0.0747 inch thick, liner 22 gage, 0.03 inch thick.
3. Finish: Factory prime paint.
4. Insulation: 1 inch rigid glass fiber.
5. Gasket: Neoprene, continuous around cover perimeter.

.

F. Hardware: Steel, zinc coated and chromate sealed, unless otherwise indicated or required by manufacturer.
   1. Lifting Mechanisms: Compression or torsion spring operator with shock absorbers that automatically opens upon release of latch; capable of lifting covers despite 10 psf load.
   2. Hinges: Heavy duty pintle type.
   3. Hold open arm with vinyl-coated handle for manual release.
   4. Latch: Upon closing, engage latch automatically and reset manual release.
   5. Manual Release: Pull handle on interior.
   6. Locking: Padlock hasp on interior.

PART 3 EXECUTION

3.01 PREPARATION

A. Clean surfaces thoroughly prior to installation.

B. Prepare surfaces using the methods recommended by the manufacturer for achieving the best result for the substrate under the project conditions.

3.02 INSTALLATION

A. Install in accordance with manufacturer's instructions, in manner that maintains roofing weather integrity.

3.03 CLEANING

A. Clean installed work to like-new condition.

3.04 PROTECTION

A. Protect installed products until completion of project.

B. Touch-up, repair or replace damaged products before Substantial Completion.

END OF SECTION

SECTION 07 90 05

JOINT SEALERS

PART 1 GENERAL

1.01 SECTION INCLUDES

A. Sealants and joint backing.

B. Precompressed foam sealers.

1.02 RELATED REQUIREMENTS

A. Section 01 3515 – LEED Certification Procedures

B. Section 07 25 00 - Weather Barriers: Sealants required in conjunction with air barriers and vapor retarders.

C. Section 07 84 00 - Firestopping: Firestopping sealants.

D. Section 08 63 00 - Metal-Framed Skylights: Structural and weatherseal sealants and accessories.

E. Section 08 11 13 – Hollow Metal Doors and Frames

F. Section 08 43 13 – Aluminum Framed Storefront

G. Section 08 51 13 – Aluminum Windows

H. Section 08 80 00 - Glazing: Glazing sealants and accessories.

I. Section 09 21 16 - Gypsum Board Assemblies: Acoustic sealant.

J. Section 09 30 00 - Tiling: Sealant used as tile grout.

1.03 REFERENCE STANDARDS

A. ASTM C 834 - Standard Specification for Latex Sealants; 2005.

B. ASTM C 919 - Standard Practice for Use of Sealants in Acoustical Applications; 2002.

C. ASTM C 920 - Standard Specification for Elastomeric Joint Sealants; 2005.

D. ASTM C 1193 - Standard Guide for Use of Joint Sealants; 2005a.

E. ASTM D 1056 - Standard Specification for Flexible Cellular Materials--Sponge or Expanded Rubber; 2007.

F. SCAQMD 1168 - South Coast Air Quality Management District Rule No.1168; current edition; www.aqmd.gov.

1.04 ADMINISTRATIVE REQUIREMENTS

A. Coordinate the work with other sections referencing this section.

1.05 SUBMITTALS

A. See Section 01 33 00 - Submittal Procedures.

B. Product Data: Provide data indicating sealant chemical characteristics.

C. LEED Report: Submit VOC content documentation for all non-preformed sealants and primers.

1.06 QUALITY ASSURANCE

A. Manufacturer Qualifications: Company specializing in manufacturing the Products specified in this section with minimum three years documented experience.

B. Applicator Qualifications: Company specializing in performing the work of this section with minimum five years experience.

1.07 FIELD CONDITIONS

A. Maintain temperature and humidity recommended by the sealant manufacturer during and after installation.

1.08 WARRANTY

A. See Section 01 79 00 – Warranties, for additional warranty requirements.

B. Correct defective work within a five year period after Date of Substantial Completion.

C. Warranty: Include coverage for installed sealants and accessories which fail to achieve airtight seal, exhibit loss of adhesion or cohesion, or do not cure.

PART 2 PRODUCTS

2.01 MANUFACTURERS

A. Silicone Sealants:
   1. Bostik Inc; www.bostik-us.com.
   2. Pecora Corporation; www.pecora.com.
   3. Tremco;
   4. Substitutions: See Section 01 60 00 - Product Requirements.

B. Polyurethane Sealants:
   1. Bostik Inc; www.bostik-us.com.
   2. Pecora Corporation; www.pecora.com.
   3. Tremco;
   4. Substitutions: See Section 01 60 00 - Product Requirements.

C. Acrylic Sealants:
   1. Tremco Global Sealants; www.tremcosealants.com.
   2. Pecora Corp.
   3. Substitutions: See Section 01 60 00 - Product Requirements.

D. Butyl Sealants:
   1. Bostik Inc; www.bostik-us.com.
   2. Pecora Corporation; www.pecora.com.
   3. Tremco;
   4. Substitutions: See Section 01 60 00 - Product Requirements.

E. Acrylic Emulsion Latex Sealants:
   1. Bostik Inc; www.bostik-us.com.
   2. Pecora Corporation; www.pecora.com.
   3. Tremco;
   4. Substitutions: See Section 01 60 00 - Product Requirements.

F. Preformed Compressible Foam Sealers:
   1. Substitutions: See Section 01 60 00 - Product Requirements.

2.02 SEALANTS

A. Sealants and Primers - General: Provide only products having lower volatile organic compound (VOC) content than required by South Coast Air Quality Management District Rule No.1168.

B. Type B - General Purpose Exterior Sealant: Polyurethane; ASTM C 920, Grade NS, Class 25, Uses M, G, and A; multi- component.
   1. Color: Standard colors matching finished surfaces.
   2. Applications: Use for:
      a. Control, expansion, and soft joints in masonry.
      b. Joints between concrete and other materials.
      c. Joints between metal frames and other materials.
      d. Other exterior joints for which no other sealant is indicated.

C. Type E - General Purpose Interior Sealant: Acrylic emulsion latex; ASTM C 834, Type OP, Grade NS single component, paintable.
   1. Color: Standard colors matching finished surfaces.
   2. Applications: Use for:
      a. Interior wall and ceiling control joints.
      b. Joints between door and window frames and wall surfaces.
      c. Other interior joints for which no other type of sealant is indicated.

D. Type C - Plumbing Fixture/Tile Sealant: White silicone; ASTM C 920, Uses I, M and A; single component, mildew resistant.
   1. Applications: Use for:
      a. Joints between plumbing fixtures and floor and wall surfaces.
      b. Joints between toiletroom countertops and wall surfaces.

E. Type D - Acoustical Sealant: Butyl or acrylic sealant; ASTM C 920, Grade NS, Class 12-1/2, Uses M and A; single component, solvent release curing, non-skinning.
   1. Applications: Use for concealed locations only:
      a. Sealant bead between top stud runner and structure and between bottom stud track and floor.
      b. Junction boxes and gypsum board.
      c. Under thresholds

F. Type A - Silicone Sealant: ASTM C 920, Grade NS, Class 25, Uses NT, A, G, M, O; single component, non-acid curing, non-sagging, non-staining, fungus resistant, non-bleeding.
   1. Color: Standard colors matching finished surfaces.
   2. Applications: Use for:
      a. Exterior door, entrance and window frames.
      b. Vertical joints in concrete and masonry flashing.

2.03 ACCESSORIES

A. Primer: Non-staining type, recommended by sealant manufacturer to suit application.

B. Joint Cleaner: Non-corrosive and non-staining type, recommended by sealant manufacturer; compatible with joint forming materials.

C. Joint Backing: Round foam rod compatible with sealant; ASTM D 1667, closed cell PVC; oversized 30 to 50 percent larger than joint width;

D. Bond Breaker: Pressure sensitive tape recommended by sealant manufacturer to suit application.

PART 3 EXECUTION

3.01 EXAMINATION

A. Verify that substrate surfaces are ready to receive work.

B. Verify that joint backing and release tapes are compatible with sealant.

3.02 PREPARATION

A. Remove loose materials and foreign matter that could impair adhesion of sealant.

B. Clean and prime joints in accordance with manufacturer's instructions.

C. Perform preparation in accordance with manufacturer's instructions and ASTM C 1193.

D. Protect elements surrounding the work of this section from damage or disfigurement.

3.03 INSTALLATION

A. Perform work in accordance with sealant manufacturer's requirements for preparation of surfaces and material installation instructions.

B. Perform installation in accordance with ASTM C 1193.

C. Perform acoustical sealant application work in accordance with ASTM C 919.

D. Measure joint dimensions and size joint backers to achieve width-to-depth ratio, neck dimension, and surface bond area as recommended by manufacturer, except where specific dimensions are indicated.

E. Install bond breaker where joint backing is not used.

F. Install sealant free of air pockets, foreign embedded matter, ridges, and sags.

G. Apply sealant within recommended application temperature ranges. Consult manufacturer when sealant cannot be applied within these temperature ranges.

H. Tool joints concave.

3.04 PROTECTION

A. Protect sealants until cured.

END OF SECTION

SECTION 08 11 13

HOLLOW METAL DOORS AND FRAMES

PART 1 GENERAL

1.01 SECTION INCLUDES

A. Non-fire-rated steel doors and frames.

B. Steel frames for wood doors.

C. Fire-rated steel doors and frames.

D. Thermally insulated steel doors.

E. Sound-rated steel doors and frames.

1.02 RELATED REQUIREMENTS

A. Section 08 71 00 - Door Hardware

B. Section 09 90 00 - Painting and Coating: Field painting.

1.03 REFERENCE STANDARDS

A. ANSI/ICC A117.1 - American National Standard for Accessible and Usable Buildings and Facilities; International Code Council; 2003.

B. ANSI A250.8 - SDI-100 Recommended Specifications for Standard Steel Doors and Frames; 2003.

C. ANSI A250.10 - Test Procedure and Acceptance Criteria for Prime Painted Steel Surfaces for Steel Doors and Frames; 1998 (R2004).

D. ANSI A250.11 – Recommended Erection Standards for Steel Frames 2001.

E. ASTM A 653/A 653M - Standard Specification for Steel Sheet, Zinc-Coated (Galvanized) or Zinc-Iron Alloy-Coated (Galvannealed) by the Hot-Dip Process; 2007.

F. ASTM E 90 - Standard Test Method for Laboratory Measurement of Airborne Sound Transmission Loss of Building Partitions and Elements; 2009.

G. ASTM E 413 - Classification for Rating Sound Insulation; 2004.

H. BHMA A156.115 - Hardware Preparation in Steel Doors and Steel Frames; 2006.

I. NAAMM HMMA 840 - Guide Specifications for Installation and Storage of Hollow Metal Doors and Frames; The National Association of Architectural Metal Manufacturers; 2007.

J. NFPA 80 - Standard for Fire Doors and Fire Windows; National Fire Protection Association; 2007.

K. UL (BMD) - Building Materials Directory; Underwriters Laboratories Inc.; current edition.

L. UL 10C - Standard for Positive Pressure Fire Tests of Door Assemblies; 1998.

1.04 SUBMITTALS

A. See Section 01 33 00 - Submittal Procedures.

B. Product Data: Materials and details of design and construction, hardware locations, reinforcement type and locations, anchorage and fastening methods, and finishes; and one

copy of referenced grade standard.

C. Shop Drawings: Details of each opening, showing elevations, glazing, frame profiles, and identifying location of different finishes, if any.

D. Manufacturer's Certificate: Certification that products meet or exceed specified requirements.

1.05 QUALITY ASSURANCE

A. Manufacturer Qualifications: Company specializing in manufacturing the products specified in this section with minimum ten years documented experience.

B. Maintain at the project site a copy of all reference standards dealing with installation.

1.06 DELIVERY, STORAGE, AND HANDLING

A. Store in accordance with NAAMM HMMA 840.

B. Protect with resilient packaging; avoid humidity build-up under coverings; prevent corrosion.

PART 2 PRODUCTS

2.01 MANUFACTURERS

A. Steel Doors and Frames:
1. Assa Abloy Ceco, Curries, or Fleming: www.assaabloydss.com.
2. Windsor Republic Doors; www.republicdoor.com.
3. Steelcraft; www.steelcraft.com.
4. Substitutions: See Section 01 60 00 - Product Requirements.

2.02 DOORS AND FRAMES

A. Requirements for All Doors and Frames:
1. Accessibility: Comply with ANSI/ICC A117.1.
2. Door Top Closures: Flush with top of faces and edges.
3. Door Edge Profile: Beveled on both edges.
4. Door Texture: Smooth faces..
5. Hardware Preparation: In accordance with BHMA A156.115, with reinforcement welded in place, in addition to other requirements specified in door grade standard.
6. Galvanizing: All components hot-dipped zinc-iron alloy-coated (galvannealed), manufacturer's standard coating thickness.
7. Finish: Factory primed, for field finishing.

B. Combined Requirements: If a particular door and frame unit is indicated to comply with more than one type of requirement, comply with all the specified requirements for each type; for instance, an exterior door that is also indicated as being sound-rated must comply with the requirements specified for exterior doors and for sound-rated doors; where two requirements conflict, comply with the most stringent.

C. Sound Retardant Doors: Where indicated on the Door Schedule, provide core which will achieve STC-41 minimum.

2.03 STEEL DOORS

A. Exterior Doors and Interior Doors in Masonry Walls (Refer to schedule for types):
1. Grade: ANSI A250.8 Level 3, physical performance Level A, Model 2, seamless.
2. Core: Polystyrene or mineral core with 16-20 lb density (non-combustible).
3. Galvanizing: All components hot-dipped zinc-iron alloy-coated (galvannealed) in

accordance with ASTM A 653/A 653M, with manufacturer's standard coating thickness.

2.04 STEEL FRAMES

A. General:
   1. Comply with the requirements of grade specified for corresponding door, except:
      a. ANSI A250.8 Level 3 Doors: 14 gage frames.
      b. Frames for Wood Doors: Comply with frame requirements specified in ANSI A250.8 for Level 1, 16 gage
   2. Finish: Same as for door.

B. Exterior Door Frames and Interior Frames in Masonry Walls: Face welded, seamless with joints filled.
   1. Galvanizing: All components hot-dipped zinc-iron alloy-coated (galvannealed) in accordance with ASTM A 653/A 653M, with manufacturer's standard coating thickness.
   2. Weatherstripping: Separate, see Section 08 71 00.

2.05 ACCESSORY MATERIALS

A. Silencers: Resilient rubber, fitted into drilled hole; 3 on strike side of single door, 3 on center mullion of pairs, and 2 on head of pairs without center mullions.

B. Temporary Frame Spreaders: Provide for all factory- or shop-assembled frames.

2.06 FINISH MATERIALS

A. Primer: Rust-inhibiting, complying with ANSI A250.10, door manufacturer's standard.

B. Bituminous Coating: Asphalt emulsion or other high-build, water-resistant, resilient coating.

PART 3 EXECUTION

3.01 EXAMINATION

A. Verify existing conditions before starting work.

B. Verify that opening sizes and tolerances are acceptable.

3.02 INSTALLATION

A. Install in accordance with the requirements of the specified door grade standard and NAAMM HMMA 840..

B. Coordinate frame anchor placement with wall construction.

C. Coordinate installation of hardware.

3.03 TOLERANCES

A. Maximum Diagonal Distortion: 1/16 in measured with straight edge, corner to corner.

3.04 ADJUSTING

A. Adjust for smooth and balanced door movement.

B. Adjust sound control doors so that seals are fully engaged when door is closed.

END OF SECTION

SECTION 08 11 17
PRE-FINISHED STEEL DOOR FRAMES

PART 1 GENERAL

1.01 SUMMARY

A. Section Includes: This Section specifies knocked down, site assembled, prefinished metal, non-fire rated and fire-rated frames for:

1. Doors.
2. Transoms.

B. Related Requirements:

1. Section 04 22 00 Concrete Unit Masonry
2. Section 05 40 00 Cold-Formed Metal Framing
3. Section 08 14 16 Flush Wood Doors
4. Section 08 71 00, Door Hardware: Hardware.
5. Section 09 22 16 Non-Structural Metal Framing

1.02 REFERENCES

A. Reference Standards:

1. American Architectural Manufacturers Association (AAMA) - AAMA 611Voluntary Standards for Anodized Architectural Aluminum.
2. ASTM International (ASTM):
   a. ASTM A366 Standard Specification for Commercial Steel (CS) Sheet, Carbon (0.15 Maximum Percent) Cold-Rolled.
   b. ASTM A879 Standard Specification for Steel Sheet, Zinc Coated by the Electrolytic Process for Applications Requiring Designation of the Coating Mass on Each Surface
   c. ASTM B455 Standard Specification for Copper-Zinc-Lead Alloy (Leaded-Brass) Extruded Shapes.
3. National Fire Protection Association (NFPA):
   a. NFPA 80 Standard for Fire Doors and Other Opening Protectives.
   b. NFPA 252 Standard Methods of Fire Tests of Door Assemblies.
4. Underwriters Laboratories, Inc. (UL):
   a. UL 10B Fire Test of Door Assemblies.
   b. UL 10C Positive Pressure Fire Tests of Door Assemblies.

1.03 ADMINISTRATIVE REQUIREMENTS

A. Coordination: Coordinate work of this Section with work of other trades for proper time and sequence to avoid construction delays.

1.04 ACTION SUBMITTALS

A. General: Submit listed submittals in accordance with Contract Conditions and Section [01 33 00 - Submittal Procedures].

B. Product Data: Submit specified products as follows:

1. Manufacturer's product data.
2. Manufacturer’s installation instructions.
3. Catalog pages illustrating products to be incorporated into project.

4. Material Safety Data Sheets (MSDS).

C. Shop Drawings: Indicate information on shop drawings as follows:

1. Frame elevations.
2. Details of frame anchorage.
3. Details of reinforcements.
4. Rough opening requirements.
5. Finishes

D. Samples

1. Frame samples illustrating finish specified.

1.05 QUALITY ASSURANCE

Specifier Note: Retain the following Paragraph when certification related to sustainability submittals is a project requirement.

A. Sustainability Standards Certification: Provide certification for recycled content and regional use.

1.06 DELIVERY, STORAGE & HANDLING

A. Delivery and Acceptance Requirements:

1. Deliver materials in manufacturer=s original packaging with identification labels intact and in sizes to suit project.

B. Storage and Handling Requirements:

1. Store materials protected from exposure to harmful weather conditions and at temperature conditions recommended by manufacturer.

C. Packaging Waste Management:

1. Separate waste materials for recycling in accordance with Section 01 74 19 - Construction Waste Management and Disposal.

1.07 WARRANTY

A. Manufacturer's Warranty: Submit for Owner's acceptance manufacturer's standard warranty document executed by authorized company official. Manufacturer's warranty is in addition to, and does not limit, other rights Owner may have under other Contract Documents.

PART 2 PRODUCTS

2.01 MANUFACTURER:

A. Timely Industries, www.timelyframes.com.

B. Door Components, Inc., www.doorcomponents.com

C. Equal substitution

2.02 FRAMES:

A. Frame Material:

1. Electro-galvanized, cold-rolled steel to ASTM A879.

B. Frame Throat Opening: As indicated on drawings.

C. Size: As indicated on drawings.

D. Frame Profile:

1. "S" Series: Standard 0.9 mm (20 gauge) thick.

E. Regulatory Requirements:

a. Fire-rated Frame Construction: Conform to ASTM E152, NFPA 252 and UL 10B and 10C.

b. Installed Frame Assembly: Conform to NFPA 80.

F. Fabrication:

1. Cut, notch and fabricate frames at manufacturer's facility. For fire-rated and exterior openings, provide kerf at stop for installation of smoke gasket or weatherstrip.
2. Provide minimum 14 gauge hinge reinforcement plate, tapped for machine screws supplied with hinges. Mechanically attach hinge plate to hinge emboss on frame.
3. Casing Clips: Fabricate frames with factory applied, heat treated clips to prevent deflection in the clip upon application or removal of casing. Attachment clips may not be of same material as frame.
4. Provide notches and tabs or stops (or both) for positive alignment of frame parts at all corners.
5. Prepare frames for ASA 4 7/8 inch (124 mm) strikes, where required. Provide minimum 1/4 inch (6.35 mm) depth of threads in factory tapped screw holes.
6. Provide corner alignment clips.

G. Finishes:

1. Steel, Colonial Steel and Galvanized Steel: [Polyurethane-based, 3-coat paint system] [Electrostatically-applied water-based paint system].
   a. Standard Color(s): As selected by Architect.

2.03 ACCESSORIES

A. Frame Reinforcements for Site Installation: Manufacturer's standard reinforcements for hardware as indicated in Section 08 71 00, Door Hardware.

B. Adjustable strikes: Emboss frames for TA-1 strike for cylindrical lock. Provide TA-1 strike in finish compatible with hardware finish.

PART 3 EXECUTION

3.01 EXAMINATION

A. Verification of Conditions: Verify that conditions of substrates previously installed under other sections or contracts are acceptable for product installation in accordance with manufacturer′s instructions prior to door frame installation.

1. Inform Architect of unacceptable conditions immediately upon discovery.
2. Proceed with installation only after unacceptable conditions have been remedied.

3.02 INSTALLATION

A. Coordinate frame work with work of other trades for proper time and sequence to avoid construction delays.

B. Install frame in accordance with manufacturer's instructions.

C. Install frame plumb and level.

D. Accurately fit, align, securely fasten and install free from distortion or defects.

3.03 CLEANING

A. Upon completion, remove surplus materials, rubbish, tools and equipment in accordance with Division 1 specification.

B. Waste Management:

1. Collect recyclable waste and dispose of or recycle field-generated construction waste created during demolition, construction or final cleaning.
2. Remove recycling containers and bins from site.

3.04 PROTECTION

A. Protect installed product from damage during construction.

B. Repair damage to adjacent materials caused by door frame installation.

END OF SECTION

SECTION 08 14 16

FLUSH WOOD DOORS

PART 1 GENERAL

1.01 SECTION INCLUDES

A. Flush wood doors; flush configuration; fire rated, non-rated, and acoustical.

1.02 RELATED REQUIREMENTS

A. Section 08 11 13 - Hollow Metal Doors and Frames.

B. Section 08 71 00 - Door Hardware.

C. Section 09 90 00 - Painting and Coating: Site finishing of doors.

1.03 REFERENCE STANDARDS

A. AWI/AWMAC (QSI) - Architectural Woodwork Quality Standards Illustrated; Architectural Woodwork Institute and Architectural Woodwork Manufacturers Association of Canada; 2005, 8th Ed., Version 2.0.

B. ICC (IBC) - International Building Code; 2010.

C. ITS (DIR) - Directory of Listed Products; Intertek Testing Services NA, Inc.; current edition.

D. NFPA 80 – Standard for Fire Doors and Fire Windows; National Fire Protection Association 2007

E. UL (BMD) - Building Materials Directory; Underwriters Laboratories Inc.; current edition.

F.. WDMA I.S.1-A - Architectural Wood Flush Doors; Window and Door Manufacturers Association; 2004.

1.04 SUBMITTALS

A. See Section 01 33 00 -Submittal Procedures.

B. Product Data: Indicate door core materials and construction; veneer species, type and characteristics.

C. Specimen warranty.

D. Shop Drawings: Illustrate door opening criteria, elevations, sizes, types, swings, undercuts required, special beveling, special blocking for hardware, factory machining criteria, factory finishing criteria, identify cutouts for glazing.

E. Samples: Submit two samples of door veneer, 4 x 4 inch in size illustrating wood grain, stain color, and sheen.

1.05 QUALITY ASSURANCE

A. Manufacturer Qualifications: Company specializing in manufacturing the products specified in this section with minimum ten years of documented experience.

B. Installed Fire Rated Door Assembly: Conform to NFPA 80 for fire rated class as indicated.

1.06 DELIVERY, STORAGE, AND HANDLING

A. Package, deliver and store doors in accordance with specified quality standard.

B. Accept doors on site in manufacturer's packaging. Inspect for damage.

C. Protect doors with resilient packaging sealed with heat shrunk plastic. Do not store in damp or wet areas; or in areas where sunlight might bleach veneer. Seal top and bottom edges with tinted sealer if stored more than one week. Break seal on site to permit ventilation.

1.07 WARRANTY

A. Interior Doors: Provide manufacturer's warranty for the life of the installation.

B. Include coverage for delamination of veneer, warping beyond specified installation tolerances, defective materials, and telegraphing core construction.

PART 2 PRODUCTS

2.01 MANUFACTURERS

A. Wood Veneer Faced Doors:

1. Columbus Door Company: www.columbusdoors.com
2. Graham Wood Doors: www.grahamdoors.com.
3. Eggers Industries: www.eggersindustries.com.

2.02 DOORS AND PANELS

A. All Doors: See drawings for locations and additional requirements.
1. Quality Level: Premium Grade, in accordance with AWI/AWMAC Architectural Woodwork Quality Standards Illustrated, Section 1300.
2. Wood Veneer Faced Doors: 5-ply unless otherwise indicated.

B. Interior Doors: 1-3/4 inches thick unless otherwise indicated; flush construction.
1. Provide solid core doors at all locations.
2. Wood veneer facing with factory transparent finish where indicated on drawings.
3. Fire Rated Doors: Tested to ratings indicated on drawings in accordance with International Building Code (“positive pressure”); UL or WH (ITS) labeled without any visible seals when door is open.

2.03 DOOR AND PANEL CORES

A. Non-Rated Solid Core: Type particleboard core (PC), plies and faces as indicated above.

B. Sound Retardant Doors: Equivalent to Type PC construction with core as required to achieve STC-41; plies and faces as indicated above. Refer to door schedule for location of Sound Retardant Doors.

C. Fire Rated Doors: Mineral core, Type FD, plies and faces as indicated above; with core blocking as required to provide adequate anchorage of hardware without through-bolting.

2.04 DOOR FACINGS

A. Wood Veneer Facing for Transparent Finish: Species as specified above, veneer grade as specified by quality standard, plain sliced, book veneer match, running assembly match; unless otherwise indicated.
1. Vertical Edges: Same species as face veneer.
2. Pairs: Pair match each pair; set match pairs within 10 feet of each other when doors are closed.

B. Facing Adhesive: Type I - waterproof.

2.05 ACCESSORIES

A. Perimeter Door Gaskets (at Sound Retardant Doors): Provide gasketing at head and jambs; Pemko S88 or equal.

B. Automatic Door Bottom: Provide Pemko 217 or equal.

2.06 DOOR CONSTRUCTION

A. Fabricate doors in accordance with door quality standard specified.

B. Cores Constructed with Stiles and Rails:
   1. Provide solid blocks at lock edge for hardware reinforcement.

C. Factory machine doors for hardware other than surface-mounted hardware, in accordance with hardware requirements and dimensions.

D. Factory fit doors for frame opening dimensions identified on shop drawings, with edge clearances in accordance with specified quality standard.
   1. Exception: Doors to be field finished.

E. Provide edge clearances in accordance with AWI Quality Standards Illustrated Section 1700.

2.07 FACTORY FINISHING - WOOD VENEER DOORS

A. Factory finish doors in accordance with specified quality standard:
   1. Transparent Finish: Transparent catalyzed polyurethane, Premium quality, matte sheen.

B. Factory finish doors in accordance with approved sample.

PART 3 EXECUTION

3.01 EXAMINATION

A. Verify existing conditions before starting work.

B. Verify that opening sizes and tolerances are acceptable.

C. Do not install doors in frame openings that are not plumb or are out-of-tolerance for size or alignment.

3.02 INSTALLATION

A. Install doors in accordance with manufacturer's instructions and specified quality standard.
   1. Install fire-rated doors in accordance with NFPA 80 requirements.

B. Factory-Finished Doors: Do not field cut or trim; if fit or clearance is not correct, replace door.

C. Use machine tools to cut or drill for hardware.

D. Coordinate installation of doors with installation of frames and hardware.

E. Coordinate installation of glazing.

3.03 TOLERANCES

A. Conform to specified quality standard for fit and clearance tolerances.

B. Conform to specified quality standard for maximum diagonal distortion.

3.04 ADJUSTING

A. Adjust doors for smooth and balanced door movement.

B. Adjust closers for full closure.

3.05 SCHEDULE - See Drawings

END OF SECTION

SECTION 08 43 13

ALUMINUM-FRAMED STOREFRONTS

PART 1 GENERAL

1.01 SECTION INCLUDES

A. Aluminum-framed storefront, with vision glass.

B. Aluminum doors and frames.

C. Weatherstripping.

D. Perimeter sealant.

1.02 RELATED REQUIREMENTS

A. Section 07 90 05 - Joint Sealers: Perimeter sealant and back-up materials.

B. Section 08 71 00 - Door Hardware

C. Section 08 81 00 - Glazing: Glass and glazing accessories.

1.03 REFERENCE STANDARDS

A. AAMA CW-10 - Care and Handling of Architectural Aluminum From Shop to Site; American Architectural Manufacturers Association; 2004.

B. AAMA 501.2 - Field Check of Metal Storefronts, Curtain Walls, and Sloped Glazing Systems for Water Leakage; American Architectural Manufacturers Association; 2003 (part of AAMA 501).

C. AAMA 611 - Voluntary Specification for Anodized Architectural Aluminum; American Architectural Manufacturers Association; 1998.

D. AAMA 1503.1 - Voluntary Test Method for Thermal Transmittance and Condensation Resistance of Windows, Doors and Glazed Wall Sections; American Architectural Manufacturers Association; 2009.

E. ASTM B 209 - Standard Specification for Aluminum and Aluminum-Alloy Sheet and Plate; 2007.

F. ASTM B 221 - Standard Specification for Aluminum and Aluminum-Alloy Extruded Bars, Rods, Wire, Profiles, and Tubes; 2008.

G. ASTM E 283 - Standard Test Method for Determining the Rate of Air Leakage Through Exterior Windows, Curtain Walls, and Doors Under Specified Pressure Differences Across the Specimen; 2004.

H. ASTM E 330 - Standard Test Method for Structural Performance of Exterior Windows, Doors, Skylights and Curtain Walls by Uniform Static Air Pressure Difference; 2002.

I. ASTM E 331 - Standard Test Method for Water Penetration of Exterior Windows, Skylights, Doors, and Curtain Walls by Uniform Static Air Pressure Difference; 2000.

1.04 ADMINISTRATIVE REQUIREMENTS

A. Coordinate with installation of other components that comprise the exterior enclosure.

B. Preinstallation Meeting: Conduct a preinstallation meeting one week before starting work of this section; require attendance by all affected installers.

1.05 SUBMITTALS

A. See Section 01 33 00 - Submittal Procedures.

B. Product Data: Provide component dimensions, describe components within assembly, anchorage and fasteners, glass and infill, internal drainage details.

C. Shop Drawings: Indicate system dimensions, framed opening requirements and tolerances, affected related Work, expansion and contraction joint location and details, and field welding required.

D. Design Data: Provide framing member structural and physical characteristics, engineering calculations, dimensional limitations.

E. Samples: Submit two samples 2 x 2 inches in size illustrating finished aluminum surface, glass, infill panels, glazing materials.

1.06 QUALITY ASSURANCE

A. Manufacturer and Installer Qualifications: Company specializing in manufacturing aluminum glazing systems with minimum three years of documented experience.

B. Test reports from AAMA certifying performance as required by ASTM standards cited above in article 1.03.

1.07 DELIVERY, STORAGE, AND HANDLING

A. Handle products of this section in accordance with AAMA CW-10.

B. Protect finished aluminum surfaces with wrapping. Do not use adhesive papers or sprayed coatings that bond to aluminum when exposed to sunlight or weather.

1.08 FIELD CONDITIONS

A. Do not install sealants when ambient temperature is less than 40 degrees F. Maintain this minimum temperature during and 48 hours after installation.

1.09 WARRANTY

A. See Section 01 79 00 for additional warranty requirements.

B. Correct defective Work within a five year period after Date of Substantial Completion.

C. Provide five year manufacturer warranty against failure of glass seal on insulating glass units, including interpane dusting or misting. Include provision for replacement of failed units.

PART 2 PRODUCTS

2.01 MANUFACTURERS

A. Basis of Design: Efco Corporation; Series 401; Glazed Screw Spline; www.efcocorp.com

B. Other Acceptable Manufacturers:

1. Arcadia, Inc. www.arcadiainc.com
2. United States Aluminum Corp; Product: Series 451: www.usalum.com.
3. Substitutions: See Section 01340 for Substitution Request.

2.02 STOREFRONT

A. Aluminum-Framed Storefront: Screw spline assembly. Factory fabricated, factory finished aluminum framing members with infill, and related flashings, anchorage and attachment devices.
1. Glazing Rabbet: For 1 inch insulating glazing.
2. Glazing Position: Center.

3. Vertical Mullion Dimensions: 2 inches wide by 4-1/2 inches deep.
4. Design Wind Load: 20 lbf/sq ft, positive and negative.
5. Water Leakage Test Pressure Differential: 8 lbf/sq ft.
6. Air Infiltration Test Pressure Differential: 6.24 psf.
7. Finish: Class I natural anodized.

B. Performance Requirements:
1. Design and size components to withstand the specified load requirements without damage or permanent set, when tested in accordance with ASTM E 330, using loads 1.5 times the design wind loads and 10 second duration of maximum load.
   a. Member Deflection: Limit member deflection to 1/175 in any direction, with full recovery of glazing materials.
2. Movement: Accommodate movement between storefront and perimeter framing and deflection of lintel, without damage to components or deterioration of seals.
3. Air Infiltration: Limit air infiltration through assembly to 0.06 cu ft/min/sq ft of wall area, measured at specified differential pressure across assembly in accordance with ASTM E 283.
4. System Internal Drainage: Drain to the exterior by means of a weep drainage network any water entering joints, condensation occurring in glazing channel, and migrating moisture occurring within system.
5. Expansion/Contraction: Provide for expansion and contraction within system components caused by cycling temperature range of 170 degrees F over a 12 hour period without causing detrimental effect to system components, anchorages, and other building elements.

2.03 COMPONENTS

A. Aluminum Framing Members: Extruded 6063-T6 alloy aluminum sections, thermally broken with interior section insulated from exterior, drainage holes and internal weep drainage system.
1. Glazing stops: Applied.
2. Structurally Reinforced Members: Extruded aluminum with internal reinforcement of structural steel member.

B. Doors: Glazed aluminum.
1. Thickness: 1-3/4 inches.
2. Top Rail: 4 inches wide.
3. Vertical Stiles: 4-1/2 inches wide.
4. Bottom Rail: 6 inches wide.
5. Finish: Same as storefront.

2.04 MATERIALS

A. Extruded Aluminum: ASTM B 221 (ASTM B 221M).

B. Fasteners: Stainless steel.

C. Perimeter Sealant: Type B (Two-part Polyurethane) specified in Section 07 90 05.

D. Glass: As specified in Section 08 81 00.

E. Glazing Gaskets: Type to suit application to achieve weather, moisture, and air infiltration requirements.

2.05 FINISHES

A. Class I Natural Anodized Finish: AAMA 611 AA-M12C22A41 Clear anodic coating not less than 0.7 mils thick.

2.06 HARDWARE

A. Door Hardware: As specified in Section 08 71 00.

B. Weatherstripping: Wool pile, continuous and replaceable; provide on all doors.

C. Sill Sweep Strips: Resilient seal type, retracting, of neoprene; provide on all doors.

2.07 FABRICATION

A. Fabricate components with minimum clearances and shim spacing around perimeter of assembly, yet enabling installation and dynamic movement of perimeter seal.

B. Accurately fit and secure joints and corners. Make joints flush, hairline, and weatherproof.

C. Prepare components to receive anchor devices. Fabricate anchors.

D. Coat concealed metal surfaces that will be in contact with cementitious materials or dissimilar metals with bituminous paint.

E. Arrange fasteners and attachments to conceal from view.

F. Reinforce components internally for door hardware.

G. Reinforce framing members for imposed loads.

H. Finishing: Apply factory finish to all surfaces that will be exposed in completed assemblies.
   1. Touch-up surfaces cut during fabrication so that no natural aluminum is visible in completed assemblies, including joint edges.

PART 3 EXECUTION

3.01 EXAMINATION

A. Verify dimensions, tolerances, and method of attachment with other work.

B. Verify that wall openings and adjoining air and vapor seal materials are ready to receive work of this section.

3.02 INSTALLATION

A. Install wall system in accordance with manufacturer's instructions.

B. Attach to structure to permit sufficient adjustment to accommodate construction tolerances and other irregularities.

C. Provide alignment attachments and shims to permanently fasten system to building structure.

D. Align assembly plumb and level, free of warp or twist. Maintain assembly dimensional tolerances.

E. Provide thermal isolation where components penetrate or disrupt building insulation.

F. Install sill flashings. Turn up ends and edges; seal to adjacent work to form water tight dam.

G. Where fasteners penetrate sill flashings, make watertight by seating and sealing fastener heads to sill flashing.

H. Coordinate attachment and seal of perimeter air and vapor barrier materials.

I. Pack fibrous insulation in shim spaces at perimeter of assembly to maintain continuity of thermal barrier.

J. Install operating sash.

K. Set thresholds in bed of mastic and secure.

L. Install glass and infill panels in accordance with Section 08 81 00, using glazing method required to achieve performance criteria.

M. Install perimeter sealant in accordance with Section 07 90 05.

N. Touch-up minor damage to factory applied finish; replace components that cannot be satisfactorily repaired.

3.03 TOLERANCES

A. Maximum Variation from Plumb: 0.06 inches every 3 ft non-cumulative or 1/16 inches per 10 ft, whichever is less.

B. Maximum Misalignment of Two Adjoining Members Abutting in Plane: 1/32 inch.

3.04 FIELD QUALITY CONTROL

A. See Section 01 45 00 – Quality Control, for independent testing and inspection requirements. Inspection will monitor quality of installation and glazing.

B. Test installed storefront for water leakage in accordance with AAMA 501.2.

3.05 ADJUSTING

A. Adjust operating hardware and sash for smooth operation.

3.06 CLEANING

A. Remove protective material from pre-finished aluminum surfaces.

B. Wash down surfaces with a solution of mild detergent in warm water, applied with soft, clean wiping cloths. Take care to remove dirt from corners. Wipe surfaces clean.

C. Remove excess sealant by method acceptable to sealant manufacturer.

END OF SECTION

SECTION 08 44 33

SLOPED GLAZING ASSEMBLIES

PART 1 - GENERAL

1.01 Summary

A. Section Includes: Architectural Aluminum Sloped Glazing Systems, including perimeter trims, accessories, shims and anchors, and perimeter sealing of sloped glazed framing.

1. Aluminum Sloped Glazing to be based on Kawneer 1600 Storefront System:

a. 1600 S.G. (Sloped Glazing) – 2-1/2" x 6”, outside glazed pressure plate system.

B. Related Sections:

1. Division 08 43 13 "Aluminum-Framed Storefronts"
2. Division 08 81 00 "Glazing"

1.02 References (Industry Standards)

A. Refer to references in Section 08 43 13.

1.03 System Description

A. Sloped Glazing system performance requirements:

1. Wind loads: Provide Sloped Glazing system; include anchorage, capable of withstanding wind load design pressures of 20 lbs./sq. ft. inward and 20 lbs./sq. ft. outward. The design pressures are based on the California Building Code; 2010 Edition
2. Air Infiltration: The test specimen shall be tested in accordance with ASTM E 283. Air infiltration rate shall not exceed 0.06 cfm/ft2 (.0003 m^3/s-m^2) at a static air pressure differential of 6.24 PSF (300 Pa).
3. Water Resistance, (static): The test specimen shall be tested in accordance with ASTM E 331. There shall be no leakage at a static air pressure differential of 12 PSF (575 Pa) as defined in AAMA 501.
4. Water Resistance, (dynamic): The test specimen shall be tested in accordance with AAMA 501.1. There shall be no leakage at an air pressure differential of 12 PSF (575 Pa) as defined in AAMA 501.
5. Uniform Load: A static air design load of 20 PSF (958 Pa) shall be applied in the positive and negative direction in accordance with ASTM E 330. There shall be no deflection in excess of L/175 of the span of any framing member at design load. At structural test load equal to 1.5 times the specified design load, no glass breakage or permanent set in the framing members in excess of 0.2% of their clear spans shall occur.

1.04 Submittals

A. General: Prepare, review, approve, and submit specified submittals in accordance with "Conditions of the Contract" and Submittals Sections. Product data, shop drawings, samples, and similar submittals are defined in "Conditions of the Contract."

B. Quality Assurance/Control Submittals:

1. Test Reports: Submit certified test reports showing compliance with specified performance characteristics.

1.05 Warranty

A. Manufacturer's Product Warranty: Submit, for Owner's acceptance, manufacturer's warranty for entrance system as follows:

1. Warranty Period: Two (2) years from Date of Substantial Completion of the project provided however that the Limited Warranty shall begin in no event later than six months from date of shipment by Kawneer.

1.06 Quality Assurance

A. Qualifications:

1. Installer Qualifications: Installer experienced (as determined by contractor) to perform work of this section who has specialized in the installation of work similar to that required for this project and who is acceptable to product manufacturer.
2. Manufacturer Qualifications: Manufacturer capable of providing structural calculations, applicable independent product test reports, installation instructions, a review of the application method, customer approval and periodic field service representation during construction.

B. Pre-Installation Meetings: Conduct pre-installation meeting to verify project requirements, substrate conditions, manufacturer's installation instructions, and manufacturer's warranty requirements.

1.07 Delivery, Storage, and Handling

A. Ordering: Comply with manufacturer's ordering instructions and lead-time requirements to avoid construction delays.
B. Packing, Shipping, Handling and Unloading: Deliver materials in manufacturer's original, unopened, undamaged containers with identification labels intact.
C. Storage and Protection: Store materials protected from exposure to harmful weather conditions. Handle sloped glazing material and components to avoid damage. Protect curtain wall material against damage from elements, construction activities, and other hazards before, during and after sloped glazing installation.

PART 2 - PRODUCTS

2.01 Manufacturers:

A. Acceptable Manufacturers:
   1. Kawneer Company, Inc. (Basis of Design)
   2..Efco Corportion
   3. Arcadia, Inc.
   4. Substitutions per Division 1 requirements

B. Products

   1. Kawneer Aluminum Sloped Glazing
   2. Series: 1600 S.G. (Sloped Glazing)
   3.. Framing Member Profile: 2-1/2" x 4-3/4", outside glazed pressure plate system.
      a. Finish/Color: Natural Anodized

2.02 Materials

A. Aluminum (Sloped Glazing and Components):
   1. Material Standard: ASTM B 221; 6063-T6 alloy and temper
   2. Member Wall Thickness: Each framing member shall provide structural strength to meet specified performance requirements.
   3. Tolerances: Reference to tolerances for wall thickness and other cross-sectional dimensions of curtain wall members are nominal and in compliance with AA Aluminum Standards and Data.

2.03 Accessories

A. Fasteners: Where exposed, shall be Stainless Steel.
B. Gaskets: Glazing gaskets shall comply with ASTM C 864 and be extruded of a silicone compatible EPDM, TPV or equal rubber that provides for silicone adhesion.
C. Perimeter Anchors: Aluminum. When steel anchors are used, provide insulation between steel material and aluminum material to prevent galvanic action.
D. Thermal Barrier: Thermal separator shall be extruded of a silicone compatible PVC (Poly Vinyl Chloride) that provides for silicone adhesion.

2.04 Related Materials

A. Sealants: Refer to Joint Treatment (Sealants) Section.
B. Glass: Refer to Glass and Glazing Section.

2.05 Fabrication

A. General:
   1. Fabricate components per manufacturer's installation instructions and with minimum clearances and shim spacing around perimeter of assembly, yet enabling installation and dynamic movement of perimeter seal.
   2. Accurately fit and secure joints and corners. Make joints flush, hairline and weatherproof.
   3. Prepare components to receive anchor devices. Fabricate anchors.
   4. Arrange fasteners and attachments to conceal from view.

2.06 Finishes
A. Factory Finishing:
   1. Architectural Class I Clear Anodic Coating AAMA 611.

PART 3 - EXECUTION

3.01 Examination
A. Site Verification of Conditions: Verify substrate conditions (which have been previously installed under other sections) are acceptable for product installation in accordance with manufacturer's instructions. Verify openings are sized to receive curtain wall system and sill plate is level in accordance with manufacturer's acceptable tolerances.
   1. Field Measurements: Verify actual measurements/openings by field measurements before fabrication; show recorded measurements on shop drawings. Coordinate field measurements, fabrication schedule with construction progress to avoid construction delays.

3.02 Installation
A. General: Install sloped glazing systems plumb, level, and true to line, without warp or rack of frames with manufacturer’s prescribed tolerances and installation instructions. Provide support and anchor in place.
   1. Dissimilar Materials: Provide separation of aluminum materials from sources of corrosion or electrolytic action contact points.
   2. Glazing: Glass shall be outside glazed and held in place with extruded aluminum pressure plates anchored to the rafters using stainless steel fasteners.
   3. Water Drainage: Water shall be typically diverted to the rafters and exit to the exterior of the building through weeps in the baffle and gutter. Typical horizontal covers and pressure plates will not require weep holes.
   4. All curb construction to support sloped glazing is to be designed by the architect and building engineer to be rigid with negligible deflection (either horizontally or vertically) under design loads.
B. Related Products Installation Requirements:
   1. Sealants (Perimeter): Refer to Specification Section 07 90 05, Joint Sealers.
   2. Glass: Refer to Specification Section 08 81 00, Glazing.
      a. Reference: ANSI Z97.1, CPSC 16 CFR 1201 and GANA Glazing Manual.

3.03 Field Quality Control
A. Field Tests: Architect shall select sloped glazing units to be tested as soon as a representative portion of the project has been installed, glazed, perimeter caulked and cured. Conduct tests for air infiltration and water penetration with manufacturer’s representative present. Tests not meeting specified performance requirements and units having deficiencies shall be corrected as part of the contract amount.
   1. Testing: Testing shall be performed per AAMA 503 by a qualified independent testing agency. Refer to Testing Section for payment of testing and testing requirements.
      a. Air Infiltration Tests: Conduct tests in accordance with ASTM E 783. Allowable air infiltration shall not exceed 1.5 times the amount indicated in the performance requirements or 0.09 cfm/ft2, which ever is greater.
      b. Water Infiltration Tests: Conduct tests in accordance with ASTM E 1105. No uncontrolled water leakage is permitted when tested at a static test pressure of two-thirds the specified water penetration pressure but not less than 8 PSF (383 Pa).
B. Manufacturer’s Field Services: Upon Owner’s written request, provide periodic site visit by manufacturer’s field service representative.

3.04 Protection and Cleaning

A. Protection: Protect installed product's finish surfaces from damage during construction. Protect aluminum sloped glazing system from damage from grinding and polishing compounds, plaster, lime, acid, cement, or other harmful contaminants.

B. Cleaning: Repair or replace damaged installed products. Clean installed products in accordance with manufacturer's instructions prior to owner's acceptance. Remove construction debris from project site and legally dispose of debris.

END OF SECTION 08 44 33

SECTION 08 51 13
ALUMINUM WINDOWS

PART 1 GENERAL

1.01 SECTION INCLUDES

A. Extruded aluminum windows with fixed sash.

B. Factory glazing.

1.02 RELATED REQUIREMENTS

A. Section 07 9005 - Joint Sealers: Perimeter sealant and back-up materials.

B. Section 08 8000 - Glazing.

1.03 REFERENCE STANDARDS.

A. AAMA 611 - Voluntary Specification for Anodized Architectural Aluminum; American Architectural Manufacturers Association; 1998.

B. AAMA 1503 - Voluntary Test Method for Thermal Transmittance and Condensation Resistance of Windows, Doors and Glazed Wall Sections; American Architectural Manufacturers Association; 2009.

C. AAMA 2603 - Voluntary Specification, Performance Requirements and Test Procedures for Pigmented Organic Coatings on Aluminum Extrusions and Panels; 2002.

D. AAMA CW-10 - Care and Handling of Architectural Aluminum From Shop to Site; American Architectural Manufacturers Association; 2004.

E. ASCE 7 - Minimum Design Loads for Buildings and Other Structures; American Society of Civil Engineers; 2010.

F. ASTM A 123/A 123M - Standard Specification for Zinc (Hot-Dip Galvanized) Coatings on Iron and Steel Products; 2009.

G. ASTM B 221 - Standard Specification for Aluminum and Aluminum-Alloy Extruded Bars, Rods, Wire, Profiles, and Tubes; 2008.

H. ASTM E 283 - Standard Test Method for Determining the Rate of Air Leakage Through Exterior Windows, Curtain Walls, and Doors Under Specified Pressure Differences Across the Specimen; 2004.

I. ASTM E 330 - Standard Test Method for Structural Performance of Exterior Windows, Doors, Skylights and Curtain Walls by Uniform Static Air Pressure Difference; 2002 (Reapproved 2010).

J. ASTM E 331 - Standard Test Method for Water Penetration of Exterior Windows, Skylights, Doors, and Curtain Walls by Uniform Static Air Pressure Difference; 2000 (Reapproved 2009).

K. SSPC-Paint 20 - Zinc-Rich Primers (Type I, "Inorganic," and Type II, "Organic"); Society for Protective Coatings; 2002 (Ed. 2004).

1.04 ADMINISTRATIVE REQUIREMENTS

A. Preinstallation Meeting: Convene one week before starting work of this section.

1.05 SUBMITTALS

A. See Section 01 3000 - Administrative Requirements, for submittal procedures.

B. Product Data: Provide component dimensions and internal drainage details.

C. Shop Drawings: Indicate opening dimensions, elevations of different types, framed opening tolerances, method for achieving air and vapor barrier seal to adjacent construction, anchorage locations and installation requirements.

D. Samples: Submit two samples, 12 x 12 inch in size illustrating typical corner construction, accessories, and finishes.

E. Manufacturer's Installation Instructions: Include complete preparation, installation, and cleaning requirements.

1.06 QUALITY ASSURANCE

A. Manufacturer and Installer Qualifications: Company specializing in fabrication of commercial aluminum windows of types required, with not fewer than three years of experience.

1.07 DELIVERY, STORAGE, AND HANDLING

A. Comply with requirements of AAMA CW-10.

B. Protect finished surfaces with wrapping paper or strippable coating during installation. Do not use adhesive papers or sprayed coatings that bond to substrate when exposed to sunlight or weather.

1.08 FIELD CONDITIONS

A. Do not install sealants when ambient temperature is less than 40 degrees F.

B. Maintain this minimum temperature during and 24 hours after installation of sealants.

1.09 WARRANTY

A. See Section 01 7800 - Closeout Submittals, for additional warranty requirements.

B. Provide five year manufacturer warranty against excessive degradation of exterior finish. Include provision for replacement of units with excessive fading, chalking, or flaking.

PART 2 PRODUCTS

2.01 MANUFACTURERS

A. Basis of Design: See below under description of products.

B. Aluminum Windows:
   1. Fleetwood Windows & Doors: www.fleetwoodusa.com.
   2. Peerless Products, Inc; www.peerlessproducts.com.
   3. Substitutions: See Section 01 6000 - Product Requirements.

2.02 WINDOWS

A. Windows: Tubular aluminum sections, factory fabricated, factory finished,thermally broken, vision glass, related flashings, anchorage and attachment devices.
   1. Frame Depth: 4".
   2. Air Infiltration: Limit air infiltration through assembly to 0.06 cu ft/min/sq ft of wall area, measured at a specified differential pressure across assembly in accordance with ASTM E 283.
   3. Thermal Movement: Resists thermal movement caused by 180 degrees F surface temperature without buckling stress on glass, joint seal failure, damaging loads on structural elements, damaging loads on fasteners, reduction in performance or other detrimental effects.
   4. Overall U-value, Including Glazing: 0.45, maximum.

B. Performance Requirements:
   1. Grade: AAMA/WDMA/CSA 101/I.S.2/A440 AW100.
   2. Movement: Accommodate movement between window and perimeter framing and deflection of lintel, without damage to components or deterioration of seals.
   3. Air Infiltration Test Pressure Differential: 6.24 pounds per square inch.
   4. Condensation Resistance Factor: Measured in accordance with AAMA 1503.
   5. Water Leakage: None, when measured in accordance with ASTM E 331 and E 547.

6. System Internal Drainage: Drain to the exterior by means of a weep drainage network any water entering joints, condensation occurring in glazing channel, or migrating moisture occurring within system.

C. Fixed, Non-Operable Type:
1. Construction: Thermally broken.
2. Glazing: Single; clear; transparent.
3. Exterior Finish: Class I natural anodized.
4. Interior Finish: Class I natural anodized.

2.03 COMPONENTS

A. Frames: 2 inch wide x 4 inch deep profile, of 0.04 inch thick section; thermally broken with interior portion of frame insulated from exterior portion; flush glass stops of snap-on type.

B. Sills: 4 inch thick, extruded aluminum; sloped for positive wash; fit under sash leg to 1/2 inch beyond wall face; one piece full width of opening jamb angles to terminate sill end.

2.04 MATERIALS

A. Extruded Aluminum: ASTM B 221 (ASTM B 221M), 6063 alloy, T6 temper.

B. Concealed Steel Items: Profiled to suit mullion sections; galvanized in accordance with ASTM A 123/A 123M.

2.05 FABRICATION

A. Fabricate components with smallest possible clearances and shim spacing around perimeter of assembly that will enable window installation and dynamic movement of perimeter seal.

B. Accurately fit and secure joints and corners. Make joints flush, hairline, and weatherproof.

C. Prepare components to receive anchor devices.

D. Arrange fasteners and attachments to ensure concealment from view.

E. Prepare components with internal reinforcement for operating hardware.

F. Provide internal drainage of glazing spaces to exterior through weep holes.

G. Factory glaze window units.

2.06 FINISHES

A. Class I Natural Finish or Anodized Plus Natural Anodized 2-step Finish:
1. Class I Natural Anodized Finish: AAMA 611 AA-M12C22A41 Clear anodic coating not less than 0.7 mils thick.

B. Touch-Up Primer for Galvanized Steel Surfaces: SSPC-Paint 20, zinc rich.

PART 3 EXECUTION

3.01 EXAMINATION

A. Verify that wall openings and adjoining air and vapor seal materials are ready to receive aluminum windows.

3.02 INSTALLATION

A. Install windows in accordance with manufacturer's instructions.

B. Attach window frame and shims to perimeter opening to accommodate construction tolerances and other irregularities.

C. Align window plumb and level, free of warp or twist. Maintain dimensional tolerances and alignment with adjacent work.

D. Install sill and sill end angles.

E. Provide thermal isolation where components penetrate or disrupt building insulation. Pack fibrous insulation in shim spaces at perimeter of assembly to maintain continuity of thermal barrier.

F. Coordinate attachment and seal of perimeter air barrier and vapor retarder materials.

3.03 TOLERANCES

A. Maximum Variation from Level or Plumb: 1/16 inches every 3 ft non-cumulative or 1/8 inches per 10 ft, whichever is less.

3.04 FIELD QUALITY CONTROL

A. Test installed windows for compliance with performance requirements for water penetration, in accordance with ASTM E 1105 using uniform pressure and the same pressure difference as specified for laboratory testing.
   1. If any window fails, test additional windows at Contractor's expense.

B. Replace windows that have failed field testing and retest until performance is satisfactory.

END OF SECTION

SECTION 08 71 00

DOOR HARDWARE

PART 1 - GENERAL

1.1 SUMMARY

A. Section Includes:

1. Door Hardware, including electric hardware.
2. Storefront and entrance door hardware.
3. Hold-open closers with fire-alarm interface.
4. Wall or floor-mounted electromagnetic hold-open devices.
5. Power supplies for electric hardware.
6. Low energy door operators plus sensors and actuators.
7. Cylinders for doors fabricated with locking hardware.
8. Wiring diagrams for electric hardware.
9. Key cabinets.

B. Related Sections:

1. Section 06200 - Finish Carpentry: Finish Hardware Installation
2. Section 07900 - Joint Sealers – exterior thresholds
3. Section 08100 - Metal Doors and Frames
4. Section 08200 - Wood Doors
5. Section 08240 - Integrated Security Systems
6. Section 08300 - Special Doors
7. Section 08400 - Entrances and Storefronts
8. Section 08900 - Glazed Curtain Walls
9. Section 10650 - Operable Partitions
10. Section 16200 - Electrical Power
11. Section 16722 - Fire/Life-Safety System
12. Section 16724 - Security Access Systems

C. Specific Omissions: Hardware for the following is specified or indicated elsewhere.

1. Access control system, card readers, controllers, software.
2. Windows.
3. Cabinets, including open wall shelving and locks.
4. Signs, except where scheduled.
5. Toilet accessories, including grab bars.

6. Installation.
7. Rough hardware.
8. Conduit, junction boxes & wiring.
9. Folding partitions, except cylinders where detailed.
10. Sliding aluminum doors, except cylinders where detailed.
11. Access doors and panels, except cylinders where detailed.
12. Corner Guards.
13. Wrought Iron railing gates and supports.

1.2 REFERENCES:

Use date of standard in effect as of Bid date.

A. American National Standards Institute – ANSI 156.18 – Materials and Finishes.

B. BHMA – Builders Hardware Manufacturers Association

C. DHI – Door and Hardware Institute

D. NFPA – National Fire Protection Association

1. NFPA 80 – Fire Doors and Windows
2. NFPA 105 – Smoke and Draft Control Door Assemblies
3. NFPA 252 – Fire Tests of Door Assemblies

E. UL – Underwriters Laboratories

1. UL10C – Positive Pressure Fire Tests of Door Assemblies.
2. UL 305 – Panic Hardware

F. WHI – Warnock Hersey Incorporated

G. 2007 State of California Building Code

H. Local applicable codes

I. SDI – Steel Door Institute

J. WI – Woodwork Institute

K. AWI – Architectural Woodwork Institute

L. NAAMM – National Association of Architectural Metal Manufacturers

1.3 SUBMITTALS & SUBSTITUTIONS

A. SUBMITTALS: Submit six copies of schedule per Section 01330. Only submittals printed one sided will be accepted and reviewed. Organize vertically formatted schedule into “Hardware Sets” with index of doors and headings, indicating complete designations of every item required for each door or opening. Include following information:

1. Type, style, function, size, quantity and finish of hardware items.

2. Use BHMA Finish codes per ANSI A156.18.
3. Name, part number and manufacturer of each item.
4. Fastenings and other pertinent information.
5. Description of door location using space names and numbers as published in the drawings.
6. Explanation of abbreviations, symbols, and codes contained in schedule.
7. Mounting locations for hardware.
8. Door and frame sizes, handing, materials, fire-rating and degrees of swing.
9. List of manufacturers used and their nearest representative with address and phone number.
10. Catalog cuts.
11. Wiring Diagrams.
12. Manufacturer's technical data and installation instructions for electronic hardware.

B. Bid and submit manufacturer's updated/improved item if scheduled item is discontinued.

C. Deviations: Highlight, encircle or otherwise identify deviations from "Schedule of Finish Hardware" on submittal with notations clearly designating those portions as deviating from this section.

D. If discrepancy between drawings and scheduled material in this section, bid the more expensive of the two choices, note the discrepancy in the submittal and request direction from Architect for resolution.

E. Substitutions per Division 1. Include product data and indicate benefit to the Project. Furnish operating samples on request.

F. Furnish as-built/as-installed schedule with closeout documents, including keying schedule, wiring diagrams, manufacturers' installation, adjustment and maintenance information, and supplier's final inspection report.

1.4 QUALITY ASSURANCE:

A. Qualifications:

1. Hardware supplier: direct factory contract supplier who employs a certified architectural hardware consultant (AHC), available at reasonable times during course of work for project hardware consultation to Owner, Architect and Contractor.

   a) Responsible for detailing, scheduling and ordering of finish hardware. Detailing implies that the submitted schedule of hardware is correct and complete for the intended function and performance of the openings.

B. Hardware: Free of defects, blemishes and excessive play. Obtain each kind of hardware (latch and locksets, exit devices, hinges and closers) from one manufacturer.

C. Exit Doors: Operable from inside with single motion without the use of a key or special knowledge or effort.

D. Fire-Rated Openings: NFPA 80 compliant. Hardware UL10C / California State Fire Marshal Standard 12-7-4 (positive pressure) compliant for given type/size opening and degree of label. Provide proper latching hardware, non-flaming door closers, approved-bearing hinges, and resilient seals. Coordinate with wood door section for required intumescent seals. Furnish openings complete.

1. Note: scheduled resilient seals may exceed selected door manufacturer's requirements.

2. See 2.6.E for added information regarding resilient and intumescent seals.

E. Furnish hardware items required to complete the work in accordance with specified performance level and design intent, complying with manufacturers' instructions.

F. Pre-Installation Meetings: Initiate and conduct with supplier, installer and related trades, coordinate materials and techniques, and sequence complex hardware items and systems installation. Include manufacturers' representatives of locks, panic hardware and door closers in the meetings. Convene prior to commencement of related work.

1.5 DELIVERY, STORAGE AND HANDLING:

A. Delivery: coordinate delivery to appropriate locations (shop or field).

1. Permanent keys and cores: secured delivery direct to Owner's representative.

B. Acceptance at Site: Items individually packaged in manufacturers' original containers, complete with proper fasteners and related pieces. Clearly mark packages to indicate contents, locations in hardware schedule and door numbers.

C. Storage: Provide securely locked storage area for hardware, protect from moisture, sunlight, paint, chemicals, dust, excessive heat and cold, etc.

1.6 PROJECT CONDITIONS AND COORDINATION:

A. Where exact types of hardware specified are not adaptable to finished shape or size of members requiring hardware, provide suitable types having as nearly as practical the same operation and quality as type specified, subject to Architect's approval.

B. Coordination: Coordinate hardware with other work. Furnish hardware items of proper design for use on doors and frames of the thickness, profile, swing, security and similar requirements indicated, as necessary for proper installation and function, regardless of omissions or conflicts in the information on the Contract Documents. Furnish related trades with the following information:

1. Location of embedded and attached items to concrete.

2. Location of wall-mounted hardware, including wall stops.

3. Location of finish floor materials and floor-mounted hardware.

4. Locations for conduit and raceways as needed for electrical, electronic and electro-pneumatic hardware items. Fire/life-safety system interfacing. Point-to-point wiring diagrams plus riser diagrams to related trades.

5. Manufacturer templates to door and frame fabricators.

C. Check Shop Drawings for doors and entrances to confirm that adequate provisions will be made for proper hardware installation. Do not order hardware until the submittal has been reviewed by the frame and door suppliers for compatibility with their products.

1.7 WARRANTY:

A. Part of respective manufacturers' regular terms of sale. Provide manufacturers' written warranties:

1.	Locksets:	Three years
2.	Extra Heavy Duty Cylindrical Lock:	Seven Years
3.	Exit Devices:	Three years mechanical One year electrical
4.	Closers:	Ten years mechanical Two years electrical
5.	Hinges:	One year
6.	Other Hardware	Two years

1.8 COMMISSIONING:

A. Conduct these tests prior to request for certificate of substantial completion:

1. With installer present, test door hardware operation with climate control system and stairwell pressurization system both at rest and while in full operation.

2. With installer, access control contractor and electrical contractor present, test electrical, electronic and electro-pneumatic hardware systems for satisfactory operation.

3. With installer and electrical contractor present, test hardware interfaced with fire/life-safety system for proper operation and release.

1.9 REGULATORY REQUIREMENTS:

A. Locate latching hardware between 34 inches to 44 inches above the finished floor, per California Building Code, Section 1008.1.9.2 and 1133B.2.5.2.

B. Locate panic hardware between 36 inches to 44 inches above the finished floor.

C. Handles, pull, latches, locks, other operating devices: readily openable from egress side without tight grasping, tight pinching, or twisting of the wrist to operate. California Building Code 1133B.2.5.2.

D. Adjust doors to open with not more than 5.0-pounds pressure to open at exterior doors and 5.0-pounds at interior doors. As allowed per California Building Code, Section 1133B.2.5 and 1008.1.3, local authority may increase the allowable pressure for fire doors to achieve positive latching, but not to exceed 15-pounds.

E. Door latch shall release when subjected to a 15-pound force.

F. Door shall be set in motion when subjected to a 30-pound force.

G. Door shall swing to a full-open position when subjected to a 15-pound force.

H. Adjust door closer sweep periods so that from an open position of 70 degrees, the door will take at least 3 seconds to move to a point 3 inches from the latch, measured to the landing side of the door, per California Building Code Section 1133B.2.5.1.

I. Smooth surfaces at bottom 10 inches of push sides of doors, facilitating push-open with wheelchair footrests, per California Building Code Section 1133B.2.6.

J. Door opening clear width no less than 32 inches, measured from face of frame stop, or edge of inactive leaf of pair of doors, to door face with door opened to 90 degrees. Hardware projection not a factor in clear width if located above 30 inches and the hardware projects no more than 4 inches. California Building Code Section 1133B.2.2, 1133B.2.3, and 1008.1.1.

K. Exception: doors not requiring full passage through the opening, that is, to spaces less than 24 inches in depth, may have the clear opening width reduced to 20 inches. Example: shallow closets.

L. Door opening clear height no less than 80 inches measured from top of sill to bottom of frame header stop. Projections into clear opening height not to exceed 4 inches. California Building Code Section 1133B.2.2 and 1008.1.1.

M. Thresholds: floor or landing no more than 0.50 inches below the top of the threshold of the doorway. Change in level between 0.25 inches and 0.50 inches: beveled to slope no greater than 1:2 (50 percent slope). California Building Code Section 1133B.2.4.1.

N. Existing conditions, where DSA determines unreasonable hardship, may be mitigated with a maximum 0.75 inches threshold with slope no greater than 1:2 (50 percent slope). DSA Policy #8.22.a.

O. Floor stops: Do not locate in path of travel. Locate no more than 4 inches from walls, per DSA Policy #99-08 (Access).

P. Pairs of doors: limit swing of inactive leaf to 90 degrees to protect persons reading wall-mounted tactile signage.

Q. Meet California Building Code Sections 1133B.2.1, 1133B.2.5 and 1008.1.8.

R. Exit Devices:

S. Panic hardware shall comply with CBC Section 1008.1.9 (consider that if the device is mounted lower than 36 inches AFF, the clear opening may be restricted to less than the 32 inches required clear opening). Panic bar shall be mounted 36 inches to 44 inches above finished floor surface.

T. The unlatching force shall not exceed 15-pounds applied in the direction of travel.

PART 2PRODUCTS

2.1 MANUFACTURERS:

A. Listed acceptable alternate manufacturers: submit for review products with equivalent function and features of scheduled products.

ITEM:	MANUFACTURER:	ACCEPTABLE SUB:
Hinges	(IVE) Ives	Bommer
Continuous Hinges	(IVE) Ives	Zero
Key System	(C-R) Corbin-Russwin	(SCH) Schlage
Locks	(SCH) Schlage	
Exit Devices	(VON) Von Duprin	
Closers	(C-R) Corbin-Russwin	LCN
Auto Flush Bolts	(IVE) Ives	DCI
Coordinators	(IVE) Ives	DCI
Silencers	(IVE) Ives	Hiawatha
Push & Pull Plates	(IVE) Ives	Hiawatha
Kickplates	(IVE) Ives	Hiawatha
Stops & Holders	(IVE) Ives	Hiawatha
Overhead Stops	(GLY) Glynn-Johnson	None available
Thresholds	(NGP) NGP	Zero
Seals & Bottoms	(NGP) NGP	Zero
Key Cabinets	(LUN) Lund	TelKee
Aluminum Door Locks	(ADA) Adams Rite	None

A. Manufacturers and their abbreviations used in this schedule:

IVE	H. B. Ives
GLY	Glynn-Johnson Hardware
LCN	LCN Closers
NGP	National Guard Products
SCH	Schlage Lock Company
VON	Von Duprin
ADA	Adams Rite
C/R	Corbin Russwin
KEE	Keedex
LUN	Lund

2.2 HINGING METHODS:

A. Drawings typically depict doors at 90 degrees, doors will actually swing to maximum allowable. Use wide-throw conventional or continuous hinges as needed up to 8 inches in width to allow door to stand parallel to wall for true 180-degree opening. Advise architect if 8-inch width is insufficient.

B. Conform to manufacturer's published hinge selection standard for door dimensions, weight and frequency, and to hinge selection as scheduled. Where manufacturer's standard exceeds the scheduled product, furnish the heavier of the two choices, notify Architect of deviation from scheduled hardware.

C. Conventional Hinges: Steel or stainless steel pins and concealed bearings. Hinge open widths minimum, but of sufficient throw to permit maximum door swing.

1. Outswinging exterior doors: non-ferrous with non-removable (NRP) pins and security studs.

2. Non-ferrous material exteriors and at doors subject to corrosive atmospheric conditions.

D. Continuous Hinges:

1. Geared-type aluminum.

a) Use wide-throw units where needed for maximum degree of swing, advise architect if commonly available hinges are insufficient.

2. Pinned steel/stainless steel type: continuous stainless steel, 0.25-inch diameter stainless-steel hinge pin.

a) Use engineered application-specific wide-throw units as needed to provide maximum swing degree of swing, advise architect if required width exceeds 8 inches.

2.3 LOCKSETS, LATCHSETS, DEADBOLTS:

A. Mortise Locksets and Latchsets: as scheduled.

1. Chassis: cold-rolled steel, handing field-changeable without disassembly.

2. Latchbolts: 3/4 inch throw stainless steel anti-friction type.

3. Lever Trim: through-bolted, accessible design, cast lever or solid extruded bar type levers as scheduled. Filled hollow tube design unacceptable.

a) Spindles: security design independent breakaway. Breakage of outside lever does not allow access to inside lever's hubworks to gain wrongful entry.

4. Furnish solid cylinder collars with wave springs. Wall of collar to cover rim of mortise cylinder.

5. Thumbturns: accessible design not requiring pinching or twisting motions to operate.

6. Deadbolts: stainless steel 1-inch throw.

7. Electric operation: Manufacturer-installed continuous duty solenoid.

8. Strikes: 16 gage curved steel, bronze or brass with 1 inch deep box construction, lips of sufficient length to clear trim and protect clothing.

9. Scheduled Lock Series and Design: Schlage L series, 17A design.

10. Certifications:

a) ANSI A156.13, 1994, Grade 1 Operational, Grade 1 Security.

2.4 EXIT DEVICES / PANIC HARDWARE

A. General features:

1. Independent lab-tested 1,000,000 cycles.

2. Push-through push-pad design. No exposed push-pad fasteners, no exposed cavities when operated. Return stroke fluid dampeners and rubber bottoming dampeners, plus anti-rattle devices.

3. 0.75-inch throw deadlocking latchbolts.

4. End caps: impact-resistant, flush-mounted. No raised edges or lips to catch carts or other equipment.

5. No exposed screws to show through glass doors.

6. Non-handed basic device design with center case interchangeable with all functions, no extra parts required to effect change of function.

7. Releasable in normal operation with 15-lb. maximum operating force per California State Fire Marshal Standard 12-10-3, and with 32 lb. maximum pressure under 250-lb. load to the door.

8. Exterior doors scheduled with XP-series devices: Static load force resistance of at least 2000 pounds.

9. Where devices span over door lite frame and the face of the selected lite manufacturer's frame is raised from the face of the door, furnish panic hardware manufacturer's fitted shims or glass-bead kits at no additional cost to the project.

10. Comply with CBC Section 1003.3.1.9.

B. Specific features:

1. Non-Fire Rated Devices: cylinder dogging.

2. Lever Trim: breakaway type, forged brass or bronze escutcheon min .130" thickness, compression spring drive, match lockset lever design.

3. Rod and latch guards with sloped full-width kickplates for doors fitted with surface vertical rod devices with bottom latches.

4. Fire-Labeled Devices: UL label indicating "Fire Exit Hardware". Vertical rod devices less bottom rod (LBR) unless otherwise scheduled.

5. Electrically Operated Devices: Single manufacturer source for electric latch retraction devices, electrically controlled trim, power transfers, power supplies, monitoring switches and controls.

6. Removable Mullions: Removable with single turn of building key. Securely reinstalled without need for key. Furnish storage brackets for securely stowing the mullion away from the door when removed.

2.5 CLOSERS

A. Surface Closers: [4041]

1. Full rack-and-pinion type cylinder with removable non-ferrous cover and cast iron body. Double heat-treated pinion shaft, single piece forged piston, chrome-silicon steel spring.

2. ISO 2000 certified. Units stamped with date-of-manufacture code.

3. Independent lab-tested 10,000,000 cycles.

4. Non-sized, non-handed, and adjustable. Place closer inside building, stairs, and rooms.

5. Plates, brackets and special templating when needed for interface with particular header, door and wall conditions and neighboring hardware.

6. Adjustable to open with not more than 5.0lbs pressure to open at exterior doors and 5.0lbs at interior doors. As allowed per California Building Code, Section 1133B.2.5, local authority may increase the allowable pressure for fire doors to achieve positive latching, but not to exceed 15lbs.

7. Separate adjusting valves for closing speed, latching speed and backcheck, fourth valve for delayed action where scheduled.

8. Extra-duty arms (EDA) at exterior doors scheduled with parallel arm units.

9. Exterior door closers: tested to 100 hours of ASTM B117 salt spray test, furnish data on request.

10. Exterior doors: seasonal adjustments not required for temperatures from 120 degrees F to -30 degrees F, furnish checking fluid data on request.

11. Non-flaming fluid, will not fuel door or floor covering fires.

12. Pressure Relief Valves (PRV) not permitted.

13. Accepted substitutions: C-R 6200

B. LCN-Dor-O-Matic Senior Swing

C. Low-Energy Door Operators: Comply with ANSI/BHMA 156.19 Electric power-open, hydraulically checked spring power closing. Modular construction. Finished metal cover. Field-adjustable opening force, opening speed, time-open, closing and latching speeds. Door reopens and timing cycle restores if system reactuated during closing cycle. Breakaway clutch protection from forced closing. Door, frame, motor and drive train protected by attenuated initiation of opening cycle.

1. Self-contained low-voltage power supply, terminal strip and sequencing for incorporation of electric hardware with system operation.

2.6 OTHER HARDWARE

A. Automatic Flush Bolts: Low operating force design.

B. Overhead Stops: Non-plastic mechanisms and finished metal end caps. Field-changeable hold-open, friction and stop-only functions.

C. Kick Plates: Four beveled edges, .050 inches minimum thickness, height and width as scheduled. Sheet-metal screws of bronze or stainless steel to match other hardware.

D. Door Stops: Provide stops to protect walls, casework or other hardware.

1. Unless otherwise noted in Hardware Sets, provide floor type with appropriate fasteners. Where floor type cannot be used, provide wall type. If neither can be used, provide overhead type.

2. Locate overhead stops for maximum possible opening. Consult with Owner for furniture locations. Minimum: 90deg stop / 95deg deadstop. Note degree of opening in submittal.

E. Seals: Finished to match adjacent frame color. Resilient seal material: polyurethane, polypropylene, nylon brush, silicone rubber or solid high-grade neoprene as scheduled. Do not furnish vinyl seal material. UL label applied to seals on rated doors. Substitute products: certify that the products equal or exceed specified material's thickness and durability.

1. Proposed substitutions: submit for approval.

2. Solid neoprene: MIL Spec. R6855-CL III, Grade 40.

3. Non-corroding fasteners at in-swinging exterior doors.

4. Sound control openings: Use components tested as a system using nationally accepted standards by independent laboratories. Ensure that the door leafs have the necessary sealed-in-place STC ratings. Fasten applied seals over bead of sealant.

5. Fire-rated Doors, Resilient Seals: UL10C / UBC Standard 7-2 compliant. Coordinate with selected door manufacturers' and selected frame manufacturers' requirements. Where rigid housed resilient seals are scheduled in this section and the selected door manufacturer only requires an adhesive-mounted resilient seal, furnish rigid housed seal at minimum, or both the rigid housed seal plus the adhesive applied seal. Adhesive applied seals alone are deemed insufficient for this project where rigid housed seals are scheduled.

6. Fire-rated Doors, Intumescent Seals: Furnished by selected door manufacturer. Furnish fire-labeled opening assembly complete and in full compliance with UL10C / UBC Standard 7-2. Where required, intumescent seals vary in requirement by door type and door manufacture -- careful coordination required

F. Automatic door bottoms: low operating force units. Doors with automatic door bottoms plus head and jamb seals cannot require more than two pounds operating force to open when closer is disconnected.

G. Thresholds: As scheduled and per details. Comply with CBC Section 1133B.2.4.1. Substitute products: certify that the products equal or exceed specified material's thickness. Proposed substitutions: submit for approval.

1. Exteriors: Seal perimeter to exclude water and vermin. Use sealant complying with requirements in Division 7 "Thermal and Moisture Protection". Non-ferrous 1/4inch fasteners and lead expansion shield anchors, or Red-Head #SFS-1420 (or approved equivalent) Flat Head Sleeve Anchors (SS/FHSL).

2. Fire-rated openings, 90min or less duration: use thresholds to interrupt floor covering material under the door where that material has a critical radiant flux value less than 0.22 watts per square centimeter, per NFPA 253. Use threshold unit as scheduled. If none scheduled, request direction from Architect.

3. Fire-rated openings, 3hour duration: Thresholds, where scheduled, to extend full jamb depth.

4. Acoustic openings: Set units in full bed of Division-7-compliant, leave no air space between threshold and substrate.

5. Plastic plugs with wood or sheet metal screws are not an acceptable substitute for specified fastening methods.

6. Fasteners: Generally, exposed screws to be Phillips or Robertson drive. Pinned TORX drive at high security areas. Flat head sleeve anchors (FHSL) may be slotted drive. Sheet metal and wood screws: full-thread. Sleeve nuts: full length to prevent door compression.

H. Exposed Through-Bolts: Do not use SNB, grommet nuts, sleeve nuts or other such clamping type fasteners, intent is for minimal exposed hardware. Coordinate with wood doors; ensure provision of proper blocking to support wood screws for mounting panic hardware and door closers. Coordinate with metal doors and frames; ensure provision of proper reinforcement to support machine screws for mounting panic hardware and door closers.

I. Silencers: Interior hollow metal frames, 3 for single doors, 4 for pairs of doors. Omit where adhesive mounted seal occurs. Leave no unfilled/uncovered pre-punched silencer holes.

2.7 FINISH:

A. Generally BHMA 626 Satin Chromium.

1. Areas using BHMA 626 to have push-plates, pulls and protection plates of BHMA 630, Satin Stainless Steel, unless otherwise noted.

B. Door closers: factory powder coated to match other hardware, unless otherwise noted.

C. Aluminum items: match predominant adjacent material. Seals to coordinate with frame color.

2.8 KEYING REQUIREMENTS:

A. Key System: Schlage Everest utility-patented keyway, interchangeable core. Utility patent protection to extend at least until 2014 or Corbin-Ruswin as directed by the owner. Key blanks available only from factory-direct sources, not available from after-market key blank manufacturers. For estimate use factory GMK charge. Initiate and conduct meeting(s) with Owner to determine system keyway(s), keybow styles, structure and degree of geographic exclusivity. Furnish Owner's written approval of the system. Keys

1. Existing factory registered master key system.

2. Construction keying: furnish temporary keyed-alike cores. Remove at substantial completion and install permanent cylinders/cores in Owner's presence. Demonstrate that construction key no longer operates.

3. Furnish 10 construction keys.

4. Furnish 2 construction control keys.

B. Key Cylinders: furnish utility patented, 6-pin solid brass construction.

C. Cylinder cores: furnish keyed at factory of lock manufacturer where permanent records are maintained. Locks and cylinders same manufacturer.

D. Permanent keys: use secured shipment direct from point of origination to Owner.

1. For estimate: 3 keys per change combination, 5 master keys per group, 5 grand-master keys, 3 control keys.

2. For estimate: VKC stamping plus "Do Not Duplicate".

E. Bitting List: use secured shipment direct from point of origination to Owner upon completion.

PART 3 - EXECUTION

3.1 ACCEPTABLE INSTALLERS:

A. Can read and understand manufacturers' templates, suppliers' hardware schedules and printed installation instructions. Can readily distinguish drywall screws from manufacturers' furnished fasteners. Available to meet with manufacturers' representatives and related trades to discuss installation of hardware.

3.2 PREPARATION:

A. Ensure that walls and frames are square and plumb before hardware installation. Make corrections before commencing hardware installation.

B. Locate hardware per SDI-100 and applicable building, fire, life-safety, accessibility, and security codes.

1. Notify Architect of code conflicts before ordering material.

2. Locate levers, key cylinders, t-turn pieces, touchbars and other operable portions of latching hardware between 30 inches to 44 inches above the finished floor, per CBC Section 1133B.2.5.1.

3. Where new hardware is to be installed near existing doors/hardware scheduled to remain, match locations of existing hardware.

C. Overhead stops: before installing, determine proposed locations of furniture items, fixtures, and other items to be protected by the overhead stop's action.

3.3 INSTALLATION

A. Install hardware per manufacturer's instructions and recommendations. Do not install surface-mounted items until finishes have been completed on substrate. Set units level, plumb and true to line and location. Adjust and reinforce attachment substrate for proper installation and operation. Remove and reinstall or replace work deemed defective by Architect.

1. Gaskets: install jamb-applied gaskets before closers, overhead stops, rim strikes, etc; fasten hardware over and through these seals. Install sweeps across bottoms of doors before astragals, cope sweeps around bottom pivots, trim astragals to tops of sweeps.

2. When hardware is to be attached to existing metal surface and insufficient reinforcement exists, use RivNuts, NutSerts or similar anchoring device for screws.

3. Use manufacturers' fasteners furnished with hardware items, or submit Request for Substitution with Architect.

4. Replace fasteners damaged by power-driven tools.

B. Locate floor stops no more that 4 inches from walls and not within paths of travel. See paragraph 2.2 regarding hinge widths, door should be well clear of point of wall reveal. Point of door contact no closer to the hinge edge than half the door width. Where situation is questionable or difficult, contact Architect for direction.

C. Core concrete for exterior door stop anchors. Set anchors in approved non-shrink grout.

D. Locate overhead stops for minimum 90 degrees and maximum allowable degree of swing.

E. Drill pilot holes for fasteners in wood doors and/or frames. Centerpunch hole locations before using self-drilling type screws to prevent skating. Replace screws that are not centered in their holes.

F. Lubricate and adjust existing hardware scheduled to remain. Carefully remove and give to Owner items not scheduled for reuse.

3.4. ADJUSTING

A. Adjust and check for proper operation and function. Replace units, which cannot be adjusted to operate freely and smoothly.

1. Hardware damaged by improper installation or adjustment methods: repair or replace to Owner's satisfaction.

2. Adjust doors to fully latch with no more than 1 pound of pressure.

3. Adjust delayed-action closers on fire-rated doors to fully close from fully-opened position in no more than 10 seconds.

4. Adjust door closers per 1.9 this section.

B. Inspection: Use hardware supplier's consultant or consultant's agent. Include supplier's report with closeout documents.

C. Final inspection: Installer to provide letter to Owner that upon completion installer has visited the Project and has accomplished the following:

1. Re-adjust hardware.

2. Evaluate maintenance procedures and recommend changes or additions, and instruct Owner's personnel.

3. Identify items that have deteriorated or failed.

4. Submit written report identifying problems

3.5 DEMONSTRATION:

A. Demonstrate mechanical hardware and electrical, electronic and pneumatic hardware systems, including adjustment and maintenance procedures.

3.6 PROTECTION/CLEANING:

A. Cover installed hardware, protect from paint, cleaning agents, weathering, carts/barrows, etc. Remove covering materials and clean hardware just prior to substantial completion.

B. Clean adjacent wall, frame and door surfaces soiled from installation/reinstallation process.

3.7 SCHEDULE OF FINISH HARDWARE

A. See door schedule in drawings for hardware set assignments.

B. Miscellaneous Material:

SPECWORKS # 113741

Heading 01

1 PR DOOR 108B EXTERIOR / ASSEMBLY ROOM
Opening Remark: STOREFRONT MEDIUM STILE
EXT PAIR MEDIUM STILE STOREFRONT O/S
Each Assembly to have:

2	EA	POWER TRANSFER	EPT-10	689	VON
2	EA	CONTINUOUS HINGE	112HD EPT	628	IVE
1	EA	PANIC HARDWARE	RX-LD-EL9947EO	626	VON
1	EA	PANIC HARDWARE	RX-LD-EL9947NL-OP	626	VON
1	EA	RIM CYLINDER	3080	626	C-R
2	EA	OFFSET DOOR PULL	8190-0-L	630	IVE
2	EA	AUTO. OPERATOR	9553 STD/REG	628	LCN

2	EA	SECURITY FLOOR STOP	FS18S	BLK	IVE
2	EA	MAGNETIC CONTACT	1078		SEN
1	EA	ACTUATOR, JAMB MOUNT	8310-818T		LCN
1	EA	JAMB BOX ONLY	8310-819F		LCN
4	EA	ACTUATOR, WALL MOUNT	8310-856		LCN
4	EA	FLUSH MOUNT BOX	8310-868F		LCN
1	EA	POWER SUPPLY	PS914-2RS-BK	GRY	VON
1	EA	MEMO	CARD READER BY ACCESS CONTROL SECTION OPPERATION:		

Heading 02

1 SGL DOOR 100C EXTERIOR / LARGE LECTURE ROOM
Opening Remark: SGL RAB HMF
EXT SGL MED STILE STOREFRONT

Each Assembly to have:

1	EA	CONTINUOUS HINGE	112HD	628	IVE
1	EA	PANIC HARDWARE	XP99EO	626	VON
1	EA	SURFACE CLOSER	DC6200 DS ARM	689	C-R
1	SET	SEALS	9700E HEAD & JAMBS	AL	NGP
1	EA	DRIP CAP	16A DW + 4"	CL	NGP
1	EA	DOOR SWEEP	C627A DOOR WIDTH	CL	NGP
1	EA	THRESHOLD	513 OR AS DETAILED 1/4-20 COMBO ANCHOR DOOR WIDTH	AL	NGP
1	EA	MAGNETIC CONTACT	1078		SEN

Heading 03

1 SL DOOR 100D EXTERIOR / LARGE LECTURE ROOM
EXT SLIDING

Each Assembly to have:

1		MEMO	ALL HARDWARE BY DOOR MANUFACFURER

Heading 04

1 SL DOOR 100E EXTERIOR / LARGE LECTURE ROOM
EXT SLIDING

Each Assembly to have:

1		MEMO	ALL HARDWARE BY DOOR MANUFACFURER

Heading 05

1 SGL DOOR 108C EXTERIOR / ASSEMBLY ROOM
Opening Remark: STOREFRONT MEDIUM STILE

EXT SGL MEETING ROOM MED STILE STOREFRONT O/S

Each Assembly to have:

1	EA	POWER TRANSFER	EPT-10	689	VON
1	EA	CONTINUOUS HINGE	112HD EPT	628	IVE
1	EA	PANIC HARDWARE	RX-LD-99L E996L	626	VON
1	EA	RIM CYLINDER	3080	626	C-R
1	EA	SURFACE CLOSER	DC6200 EDA ARM	689	C-R
1	EA	SECURITY FLOOR STOP	FS18S	BLK	IVE
1	EA	DOOR SWEEP	C607A	CL	NGP
1	EA	THRESHOLD	513HD 1/4-20 OR AS DETAILED COMBO ANCH. DOOR WIDTH	AL	NGP
1	EA	MAGNETIC CONTACT	1078		SEN
1	EA	MEMO	CARD READER BY ACCESS CONTROL SECTION		
1	EA	MEMO	SEALS BY ALUM FRAME MFGR		

Heading 06

1 SGL DOOR 109B EXTERIOR / FOOD SERVICE / VENDING

EXT SGL VENDING MED STILE STOREFRONT O/S

Each Assembly to have:

1		MEMO	ALL HARDWARE BY DOOR MANUFACFURER

Heading 07

1 PR DOOR 120 EXTERIOR / ELECTRIC ROOM

Opening Remark: SGL RAB HMF

EXT PAIR ELECTRIC O/S

Each Assembly to have:

1	EA	CONTINUOUS HINGE	112HD	628	IVE
1	EA	CONTINUOUS HINGE	112HD EPT	628	IVE
1	EA	AUTO FLUSH BOLT	FB31B / FB41 AS REQUIRED	630	IVE
1	EA	DUST PROOF STRIKE	DP1/DP2	626	IVE
1	EA	MTS CYL,L CAM	1080-114-SCH "L" CAM 6PIN CYL COLLAR	626	C-R
1	EA	EU STOREROOM LOCK	L9080LEU 17A L283-125	626	SCH
1	EA	COORDINATOR	COR X FL	628	IVE
2	EA	MOUNTING BRKTS	MB1/MB2 AS REQUIRED	600	IVE
2	EA	SURFACE CLOSER	DC6200 DS ARM	689	C-R
2	EA	KICK PLATE	8400 10" X 1" LDW	630	IVE
1	SET	SEALS	9700E HEAD & JAMBS	AL	NGP
2	EA	DOOR SWEEP	C627A DOOR WIDTH	CL	NGP
1	EA	THRESHOLD	513 OR AS DETAILED 1/4-20 COMBO ANCHOR DOOR WIDTH	AL	NGP
2	EA	MAGNETIC CONTACT	1078		SEN
1	EA	MEMO	CARD READER BY ACCESS CONTROL SECTION		
1		MEMO	MOUNT SEALS BEFORE INSTALLING CLOSER		

Heading 08

1 PR DOOR 131B EXTERIOR / AV RESOURCE CHECK-IN
Opening Remark: SGL RAB HMF
EXT PAIR AV CHEC-IN O/S

Each Assembly to have:

1	EA	POWER TRANSFER	EPT-10	689	VON
1	EA	CONTINUOUS HINGE	112HD	628	IVE
1	EA	CONTINUOUS HINGE	112HD EPT	628	IVE
1	EA	PANIC HARDWARE	LD-947EO	626	VON
1	EA	PANIC HARDWARE	LD-9847L E996L	626	VON
1	EA	RIM CYLINDER	3080	626	C-R
2	EA	SURFACE CLOSER	DC6200 EDA ARM	689	C-R
2	EA	KICK PLATE	8400 10" X 1" LDW	630	IVE
2	EA	SECURITY FLOOR STOP	FS18L	BLK	IVE
1	SET	SEALS	9700E HEAD & JAMBS	AL	NGP
1	EA	DRIP CAP	16A DW + 4"	CL	NGP
2	EA	DOOR SWEEP	C627A DOOR WIDTH	CL	NGP
1	EA	THRESHOLD	513HD 1/4-20 OR AS DETAILED COMBO ANCH. DOOR WIDTH	AL	NGP
2	EA	MAGNETIC CONTACT	1078		SEN
1	EA	MEMO	CARD READER BY ACCESS CONTROL SECTION		

Heading 09

1 SGL DOOR 132 EXTERIOR / FSR
EXT SGL FSR O/S

Each Assembly to have:

1	EA	CONTINUOUS HINGE	112HD	628	IVE
1	EA	STOREROOM LOCK	L9080L 17A	626	SCH
1	EA	MTS CYL,L CAM	1080-114-SCH "L" CAM 6PIN CYL COLLAR	626	C-R
1	EA	SURFACE CLOSER	DC6200 DS ARM	689	C-R
1	EA	KICK PLATE	8400 10" X 2" LDW	630	IVE
1	SET	SEALS	9700E HEAD & JAMBS	AL	NGP
1	EA	DRIP CAP	16A DW + 4"	CL	NGP
1	EA	DOOR SWEEP	C627A DOOR WIDTH	CL	NGP
1	EA	THRESHOLD	513 OR AS DETAILED 1/4-20 COMBO ANCHOR DOOR WIDTH	AL	NGP
1	EA	MAGNETIC CONTACT	1078		SEN

Heading 10

1 PR DOOR 126B EXTERIOR / IMC / LIBRARY
EXT PAI STOREFRONT MED STILE O/S

Each Assembly to have:

1	EA	POWER TRANSFER	EPT-10	689	VON
1	EA	CONTINUOUS HINGE	112HD	628	IVE
1	EA	CONTINUOUS HINGE	112HD EPT	628	IVE
1	EA	PANIC HARDWARE	LD-947EO	626	VON

1	EA	PANIC HARDWARE	LD-9847L E996L	626	VON
1	EA	RIM CYLINDER	3080	626	C-R
2	EA	SURFACE CLOSER	DC6200 EDA ARM	689	C-R
2	EA	KICK PLATE	8400 10" X 1" LDW	630	IVE
2	EA	SECURITY FLOOR STOP	FS18L	BLK	IVE
1	SET	SEALS	9700E HEAD & JAMBS	AL	NGP
1	EA	DRIP CAP	16A DW + 4"	CL	NGP
2	EA	DOOR SWEEP	C627A DOOR WIDTH	CL	NGP
1	EA	THRESHOLD	513HD 1/4-20 OR AS DETAILED COMBO ANCH. DOOR WIDTH	AL	NGP
2	EA	MAGNETIC CONTACT	1078		SEN
1	EA	MEMO	CARD READER BY ACCESS CONTROL SECTION		

Heading 11

1 SGL DOOR 133B EXTERIOR / CORRIDOR
1 SGL DOOR C137B EXTERIOR / CORRIDOR
EXT SGL CORRIDOR O/S

Each Assembly to have:

1	EA	POWER TRANSFER	EPT-10	689	VON
1	EA	CONTINUOUS HINGE	112HD EPT	628	IVE
1	EA	PANIC HARDWARE	RX-LD-99L E996L	626	VON
1	EA	RIM CYLINDER	3080	626	C-R
1	EA	SURFACE CLOSER	DC6200 EDA ARM	689	C-R
1	EA	SECURITY FLOOR STOP	FS18L	BLK	IVE
1	EA	SECURITY FLOOR STOP	FS18S	BLK	IVE
1	EA	DOOR SWEEP	C607A	CL	NGP
1	EA	THRESHOLD	513HD 1/4-20 OR AS DETAILED COMBO ANCH. DOOR WIDTH	AL	NGP
1	EA	MAGNETIC CONTACT	1078		SEN
1	EA	MEMO	CARD READER BY ACCESS CONTROL SECTION		
1	EA	MEMO	SEALS BY ALUM FRAME MFGR		

Heading 12

1 SGL DOOR 135B EXTERIOR / STAIR
EXT SGL STAIR O/S

Each Assembly to have:

1	EA	CONTINUOUS HINGE	112HD	628	IVE
1	EA	PANIC HARDWARE	XP99EO	626	VON
1	EA	SURFACE CLOSER	DC6200 DS ARM	689	C-R
1	EA	KICK PLATE	8400 10" X 2" LDW	630	IVE
1	EA	SECURITY FLOOR STOP	FS18L	BLK	IVE
1	SET	SEALS	9700E HEAD & JAMBS	AL	NGP
1	EA	DRIP CAP	16A DW + 4"	CL	NGP

1	EA	DOOR SWEEP	C627A DOOR WIDTH	CL	NGP
1	EA	THRESHOLD	513 OR AS DETAILED 1/4-20 COMBO ANCHOR DOOR WIDTH	AL	NGP
1	EA	MAGNETIC CONTACT	1078		SEN
1		MEMO	MOUNT SEALS BEFORE INSTALLING CLOSER		

Heading 13

1 PR DOOR C101 EXTERIOR / LOBBY
EXT PAIR LOBBY OS

Each Assembly to have:

2	EA	POWER TRANSFER	EPT-10	689	VON
2	EA	CONTINUOUS HINGE	112HD EPT	628	IVE
1	EA	PANIC HARDWARE	RX-LD-EL9947EO	626	VON
1	EA	PANIC HARDWARE	RX-LD-EL9947NL-OP	626	VON
1	EA	RIM CYLINDER	3080	626	C-R
2	EA	OFFSET DOOR PULL	8190-0-L	630	IVE
2	EA	AUTO. OPERATOR	9553 STD/REG	628	LCN
2	EA	SECURITY FLOOR STOP	FS18S	BLK	IVE
2	EA	MAGNETIC CONTACT	1078		SEN
1	EA	ACTUATOR, JAMB MOUNT	8310-818T		LCN
1	EA	JAMB BOX ONLY	8310-819F		LCN
4	EA	ACTUATOR, WALL MOUNT	8310-856		LCN
4	EA	FLUSH MOUNT BOX	8310-868F		LCN
1	EA	POWER SUPPLY	PS914-2RS-BK	GRY	VON
1	EA	MEMO	CARD READER BY ACCESS CONTROL SECTION		

OPPERATION:

Heading 14

1 PR DOOR 348B EXTERIOR / CORRIDOR
EXT PAIR LCORRIDOR OS

Each Assembly to have:

2	EA	POWER TRANSFER	EPT-10	689	VON
2	EA	CONTINUOUS HINGE	112HD EPT	628	IVE
1	EA	PANIC HARDWARE	RX-LD-EL9947EO	626	VON
1	EA	PANIC HARDWARE	RX-LD-EL9947NL-OP	626	VON
1	EA	RIM CYLINDER	3080	626	C-R
2	EA	OFFSET DOOR PULL	8190-0-L	630	IVE
2	EA	AUTO. OPERATOR	9553 STD/REG	628	LCN
2	EA	SECURITY FLOOR STOP	FS18S	BLK	IVE
2	EA	MAGNETIC CONTACT	1078		SEN
1	EA	ACTUATOR, JAMB MOUNT	8310-818T		LCN

1	EA	JAMB BOX ONLY	8310-819F		LCN
4	EA	ACTUATOR, WALL MOUNT	8310-856		LCN
4	EA	FLUSH MOUNT BOX	8310-868F		LCN
1	EA	POWER SUPPLY	PS914-2RS-BK	GRY	VON
1	EA	MEMO	CARD READER BY ACCESS CONTROL SECTION		

OPPERATION:

Heading 15

1 PR DOOR C225B CORRIDOR / CORRIDOR

Opening Remark: MED STILE STOREFRONT

EXT PAIR MED STILE STOREFRONT O/S

Each Assembly to have:

2	EA	POWER TRANSFER	EPT-10	689	VON
2	EA	CONTINUOUS HINGE	112HD EPT	628	IVE
1	EA	PANIC HARDWARE	RX-LD-EL9947EO	626	VON
1	EA	PANIC HARDWARE	RX-LD-EL9947NL-OP	626	VON
1	EA	RIM CYLINDER	3080	626	C-R
2	EA	OFFSET DOOR PULL	8190-0-L	630	IVE
2	EA	AUTO. OPERATOR	9553 STD/REG	628	LCN
2	EA	SECURITY FLOOR STOP	FS18S	BLK	IVE
2	EA	MAGNETIC CONTACT	1078		SEN
1	EA	ACTUATOR, JAMB MOUNT	8310-818T		LCN
1	EA	JAMB BOX ONLY	8310-819F		LCN
4	EA	ACTUATOR, WALL MOUNT	8310-856		LCN
4	EA	FLUSH MOUNT BOX	8310-868F		LCN
1	EA	POWER SUPPLY	PS914-2RS-BK	GRY	VON
1	EA	MEMO	CARD READER BY ACCESS CONTROL SECTION		

OPPERATION:

Heading 16

1 SGL DOOR C101A EXTERIOR / LOBBY

EXT PAIR LOBBY MED STILE SF OS

Each Assembly to have:

1	EA	POWER TRANSFER	EPT-10	689	VON
1	EA	CONTINUOUS HINGE	112HD EPT	628	IVE
1	EA	PANIC HARDWARE	RX-LD-99L E996L	626	VON
1	EA	RIM CYLINDER	3080	626	C-R
1	EA	SURFACE CLOSER	DC6200 EDA ARM	689	C-R
1	EA	DOME STOP	FS436/FS438 AS REQUIRED	626	IVE
1	EA	MAGNETIC CONTACT	1078		SEN
1	EA	MEMO	CARD READER BY ACCESS CONTROL SECTION		

Heading 17

1 SGL DOOR 333B DECK / LOUNGE
EXT MED STILE STOREFRONT I/S

Each Assembly to have:

1	EA	CONTINUOUS HINGE	112HD	628	IVE
1	EA	DEADLOCK	MS1850S - ADVISE BACKSET	628	ADA
1	EA	MTS CYL,L CAM	1080-118- "AR" CAM 6PIN CYL COLLAR	626	C-R
1	EA	INDICATOR	4089	628	ADA
1	EA	CYLINDER GUARD	MS4043-01 1/4"	603	ADA
1	EA	PULL/PUSHBAR	9190-0	630	IVE
1	EA	SURFACE CLOSER	DC6200 EDA ARM	689	C-R
1	EA	SECURITY FLOOR STOP	FS18S	BLK	IVE
1	EA	DOOR SWEEP	C607A	CL	NGP
1	EA	THRESHOLD	513 OR AS DETAILED 1/4-20 COMBO ANCHOR DOOR WIDTH	AL	NGP
1	EA	MAGNETIC CONTACT	1078		SEN
1	EA	MEMO	SEALS BY ALUM FRAME MFGR		

Heading 18

1 PR DOOR 100A LOBBY / LARGE LECTURE ROOM
Opening Remark: SGL RAB HMF
INT PAIR HOLLOW METAL O/S

Each Assembly to have:

2	EA	POWER TRANSFER	EPT-10	689	VON
2	EA	CONTINUOUS HINGE	112HD EPT	628	IVE
1	EA	PANIC HARDWARE	RX-LD-EL9947EO	626	VON
1	EA	PANIC HARDWARE	RX-LD-EL9947NL-OP	626	VON
1	EA	RIM CYLINDER	3080	626	C-R
2	EA	OFFSET DOOR PULL	8190-0-L	630	IVE
2	EA	AUTO. OPERATOR	9553 STD/REG	628	LCN
2	EA	SECURITY FLOOR STOP	FS18S	BLK	IVE
2	EA	MAGNETIC CONTACT	1078		SEN
1	EA	ACTUATOR, JAMB MOUNT	8310-818T		LCN
1	EA	JAMB BOX ONLY	8310-819F		LCN
4	EA	ACTUATOR, WALL MOUNT	8310-856		LCN
4	EA	FLUSH MOUNT BOX	8310-868F		LCN
1	EA	POWER SUPPLY	PS914-2RS-BK	GRY	VON
1	EA	MEMO	CARD READER BY ACCESS CONTROL SECTION		

OPPERATION:

Heading 19

1 SGL DOOR 103 CORRIDOR / RESTROOM
1 SGL DOOR 104 CORRIDOR / RESTROOM
INT SGL MO RESTROOM I/S

Each Assembly to have:

1	EA	CONTINUOUS HINGE	700	630	IVE
1	EA	PUSH PLATE	8200 4" X 16"	630	IVE
1	EA	PULL PLATE	8302-8 4" X 16"	630	IVE
1	EA	SURFACE CLOSER	DC6200 EDA ARM	689	C-R
1	EA	KICK PLATE	8400 10" X 2" LDW	630	IVE
1	EA	SECURITY FLOOR STOP	FS18S	BLK	IVE
1	SET	SEALS	9700E HEAD & JAMBS	AL	NGP
1	EA	THRESHOLD	513HD 1/4-20 COMBO ANCHOR DOOR WIDTH	AL	NGP
1		MEMO	MOUNT SEALS BEFORE INSTALLING CLOSER		
1	EA	MEMO	SIGNAGE BY OTHERS		

Heading 20

1 SGL DOOR 216 CORRIDOR / RESTROOM
1 SGL DOOR 217 CORRIDOR / RESTROOM
1 SGL DOOR 309 CORRIDOR / RESTROOM
1 SGL DOOR 310 CORRIDOR / RESTROOM
INT SGL MO RESTROOM O/S

Each Assembly to have:

1	EA	CONTINUOUS HINGE	700	630	IVE
1	EA	PUSH PLATE	8200 4" X 16"	630	IVE
1	EA	PULL PLATE	8302-8 4" X 16"	630	IVE
1	EA	SURFACE CLOSER	DC6200 EDA ARM	689	C-R
1	EA	KICK PLATE	8400 10" X 2" LDW	630	IVE
1	EA	SECURITY FLOOR STOP	FS18S	BLK	IVE
1	EA	THRESHOLD	513HD 1/4-20 COMBO ANCHOR DOOR WIDTH	AL	NGP
3	EA	SILENCER	SR64	GRY	IVE
1	EA	MEMO	SIGNAGE BY OTHERS		

Heading 21

1 SGL DOOR 100B CORRIODR / LARGE LECTURE ROOM
Opening Remark: SGL RAB HMF
INT SGL HOLLOW METAL I/S

Each Assembly to have:

1	EA	POWER TRANSFER	EPT-10	689	VON
1	EA	CONTINUOUS HINGE	112HD EPT	628	IVE
1	EA	MTS CYL,L CAM	1080-114-SCH "L" CAM 6PIN CYL COLLAR	626	C-R
1	EA	CORE ONLY	23-030	626	SCH
1	EA	EU STOREROOM LOCK	L9080LEU 17A L283-125	626	SCH

1	EA	SURFACE CLOSER	DC6200	689	C-R
1	EA	DOME STOP	FS436/FS438 AS REQUIRED	626	IVE
1	SET	SEALS	9700E HEAD & JAMBS	AL	NGP
1	EA	MAGNETIC CONTACT	1078		SEN
1	EA	MEMO	CARD READER BY ACCESS CONTROL SECTION		
1		MEMO	MOUNT SEALS BEFORE INSTALLING CLOSER		

Heading 22

1 SGL DOOR 102 CORRIDOR / JANITOR
1 SGL DOOR 124 LOBBY / UTILITY
Opening Remark: NO THRESHOLD
INT SGL JANITOR O/S

Each Assembly to have:

3	EA	HINGE	5BB1 4.5 X 4.5	652	IVE
1	EA	STOREROOM LOCK	L9080L 17A	626	SCH
1	EA	MTS CYL,L CAM	1080-114-SCH "L" CAM 6PIN CYL COLLAR	626	C-R
1	EA	SURFACE CLOSER	DC6200 DS ARM	689	C-R
1	EA	KICK PLATE	8400 10" X 2" LDW	630	IVE
3	EA	SILENCER	SR64	GRY	IVE

Heading 23

1 SGL DOOR 211 CORRIDOR / JANITOR
1 SGL DOOR 345 CORRIDOR / JANITOR
Opening Remark: NO THRESHOLD
INT SGL JANITOR O/S

Each Assembly to have:

3	EA	HINGE	5BB1 4.5 X 4.5	652	IVE
1	EA	POWER TRANSFER	EPT-10	689	VON
1	EA	MTS CYL,L CAM	1080-114-SCH "L" CAM 6PIN CYL COLLAR	626	C-R
1	EA	EU STOREROOM LOCK	L9080LEU 17A L283-125	626	SCH
1	EA	SURFACE CLOSER	DC6200	689	C-R
1	EA	KICK PLATE	8400 10" X 2" LDW	630	IVE
1	EA	DOME STOP	FS436/FS438 AS REQUIRED	626	IVE
3	EA	SILENCER	SR64	GRY	IVE
1	EA	MAGNETIC CONTACT	1078		SEN
1	EA	MEMO	CARD READER BY ACCESS CONTROL SECTION		

Heading 24

1 SGL DOOR 106 ASSEMBLY ROOM / ASSEMBLY STORAGE
INT SGL STORAGE O/S

Each Assembly to have:

3	EA	HINGE	3CB1HW 5 X 4.5 NRP	652	IVE
1	EA	POWER TRANSFER	EPT-10	689	VON
1	EA	MTS CYL,L CAM	1080-114-SCH "L" CAM 6PIN CYL COLLAR	626	C-R
1	EA	EU STOREROOM	L9080LEU 17A L283-125	626	SCH

		LOCK			
1	EA	SURFACE CLOSER	DC6200 EDA ARM	689	C-R
1	EA	KICK PLATE	8400 10" X 2" LDW	630	IVE
1	EA	DOME STOP	FS436/FS438 AS REQUIRED	626	IVE
1	SET	SEALS	9700E HEAD & JAMBS	AL	NGP
1	EA	MAGNETIC CONTACT	1078		SEN
1	EA	MEMO	CARD READER BY ACCESS CONTROL SECTION		
1		MEMO	MOUNT SEALS BEFORE INSTALLING CLOSER		

Heading 25

1 PR DOOR 108A LOBBY / ASSEMBLY ROOM
INT PAIR ASSEMBLY ROOM O/S

Each Assembly to have:

1	EA	POWER TRANSFER	EPT-10	689	VON
1	EA	CONTINUOUS HINGE	112HD	628	IVE
1	EA	CONTINUOUS HINGE	112HD EPT	628	IVE
1	EA	FIRE EXIT HARDWARE	9927EO-F-LBR	626	VON
1	EA	FIRE EXIT HARDWARE	9927L-F-LBR 996L	626	VON
1	EA	RIM CYLINDER	3080	626	C-R
2	EA	SURFACE CLOSER	DC6200 EDA ARM	689	C-R
2	EA	KICK PLATE	8400 10" X 1" LDW	630	IVE
2	EA	DOME STOP	FS436/FS438 AS REQUIRED	626	IVE
2	EA	SILENCER	SR64	GRY	IVE
2	EA	MAGNETIC CONTACT	1078		SEN
1	EA	MEMO	CARD READER BY ACCESS CONTROL SECTION		

Heading 26

1 SGL DOOR 108D ASSEMBLY ROOM / CLOSET
INT SGL CLOSET O/S

Each Assembly to have:

1	EA	CLASSROOM LOCK	L9070L 17A	626	SCH
1	EA	MTS CYL,L CAM	1080-114-SCH "L" CAM 6PIN CYL COLLAR	626	C-R
1	EA	OVERHEAD STOP	450S	630	GLY
3	EA	SILENCER	SR64	GRY	IVE

Heading 27

1 SL DOOR 109A ASSEMBLY ROOM / FOOD SERVICE / VENDING
INT SLIDING

Each Assembly to have:

2	EA	MTS CYL,L CAM	1080-118- "AR" CAM 6PIN CYL COLLAR	626	C-R
1	EA	MEMO	BALANCE BY DOOR MFGR.		

Heading 28

1 PR DOOR 110A LOBBY / COFFEE BAR
INT PAIR COFFEE BAR O/S

Each Assembly to have:

1	EA	POWER TRANSFER	EPT-10	689	VON
1	EA	CONTINUOUS HINGE	112HD	628	IVE
1	EA	CONTINUOUS HINGE	112HD EPT	628	IVE
1	EA	AUTO FLUSH BOLT	FB31B / FB41 AS REQUIRED	630	IVE
1	EA	DUST PROOF STRIKE	DP1/DP2	626	IVE
1	EA	COORDINATOR	COR X FL	628	IVE
2	EA	MOUNTING BRKTS	MB1/MB2 AS REQUIRED	600	IVE
1	EA	ASTRAGAL	139SP	600	NGP
2	EA	SURFACE CLOSER	DC6200 EDA ARM	689	C-R
2	EA	KICK PLATE	8400 10" X 1" LDW	630	IVE
2	EA	DOME STOP	FS436/FS438 AS REQUIRED	626	IVE
1	SET	SEALS	9700E HEAD & JAMBS	AL	NGP
2	EA	MAGNETIC CONTACT	1078		SEN
1	EA	MEMO	CARD READER BY ACCESS CONTROL SECTION		
1		MEMO	MOUNT SEALS BEFORE INSTALLING CLOSER		

Heading 29

1 SL DOOR 110B FOOD SERVICE / COFFEE BAR
INT SLIDING COFFEE BAR

Each Assembly to have:

2	EA	MORTISE CYLINDER	20-062-ICX	626	SCH
2	EA	CORE ONLY	23-030	626	SCH
1	EA	MEMO	BALANCE BY DOOR MFGR.		

Heading 30

1 SL DOOR 110C FOOD SERVICE / COFFEE BAR
INT SLIDING COFFEE BAR

Each Assembly to have:

2	EA	MORTISE CYLINDER	20-062-ICX	626	SCH
2	EA	CORE ONLY	23-030	626	SCH
1	EA	MEMO	BALANCE BY DOOR MFGR.		

Heading 31

1 SGL DOOR 110D CORRIDOR / COFFEE BAR
INT SGL COFFEE BAR I/S

Each Assembly to have:

3	EA	HINGE	5BB1 4.5 X 4.5	652	IVE
1	EA	CLASSROOM LOCK	L9070L 17A	626	SCH
1	EA	MTS CYL,L CAM	1080-114-SCH "L" CAM 6PIN CYL COLLAR	626	C-R
1	EA	SURFACE CLOSER	DC6200	689	C-R
1	EA	KICK PLATE	8400 10" X 2" LDW	630	IVE

1	EA	DOME STOP	FS436/FS438 AS REQUIRED	626	IVE
1	SET	SEALS	160S	AL	NGP

Heading 32

1	SGL DOOR	118	CORRIDOR / TOILET
1	SGL DOOR	119	CORRIDOR / TOILET INT SGL S O TOILET I/S

Each Assembly to have:

3	EA	HINGE	5BB1 4.5 X 4.5	652	IVE
1	EA	PRIVACY SET	L9040 17A L583-363	626	SCH
1	EA	SURFACE CLOSER	DC6200	689	C-R
1	EA	KICK PLATE	8400 10" X 2" LDW	630	IVE
1	EA	DOME STOP	FS436/FS438 AS REQUIRED	626	IVE
1	SET	SEALS	160S	AL	NGP
1	EA	DBL WARDROBE HOOK	582B	626	IVE

Heading 33

1	SGL DOOR	123	CORRIODOR / OFFICE
1	SGL DOOR	125	CORRIODOR / OFFICE
1	SGL DOOR	127	CORRIODOR / OFFICE
1	SGL DOOR	128	CORRIODOR / OFFICE
1	SGL DOOR	204	CORRIODOR / OFFICE
1	SGL DOOR	205	CORRIODOR / OFFICE
1	SGL DOOR	206	CORRIODOR / OFFICE
1	SGL DOOR	207	CORRIODOR / OFFICE
1	SGL DOOR	208	CORRIODOR / OFFICE
1	SGL DOOR	209	CORRIODOR / OFFICE
1	SGL DOOR	219	CORRIODOR / OFFICE
1	SGL DOOR	221	CORRIODOR / OFFICE
1	SGL DOOR	222	CORRIODOR / OFFICE
1	SGL DOOR	223	CORRIODOR / OFFICE
1	SGL DOOR	303A	CORRIDOR / OFFICE
1	SGL DOOR	303B	CORRIDOR / OFFICE
1	SGL DOOR	304	CORRIDOR / OFFICE
1	SGL DOOR	305	CORRIDOR / OFFICE
1	SGL DOOR	313	CORRIDOR / OFFICE
1	SGL DOOR	314	CORRIDOR / OFFICE
1	SGL DOOR	315	CORRIDOR / OFFICE
1	SGL DOOR	317	CORRIDOR / OFFICE
1	SGL DOOR	318	CORRIDOR / OFFICE
1	SGL DOOR	319	CORRIDOR / OFFICE
1	SGL DOOR	321	CORRIDOR / OFFICE
1	SGL DOOR	322	CORRIDOR / OFFICE
1	SGL DOOR	323	CORRIDOR / OFFICE
1	SGL DOOR	324	CORRIDOR / OFFICE
1	SGL DOOR	325	CORRIDOR / OFFICE
1	SGL DOOR	326	CORRIDOR / OFFICE

1	SGL DOOR	327	CORRIDOR / OFFICE
1	SGL DOOR	329	CORRIDOR / OFFICE
1	SGL DOOR	330	CORRIDOR / OFFICE
1	SGL DOOR	331	CORRIDOR / OFFICE
1	SGL DOOR	332	CORRIDOR / OFFICE
1	SGL DOOR	334	CORRIDOR / OFFICE
1	SGL DOOR	335	CORRIDOR / OFFICE
1	SGL DOOR	336	CORRIDOR / OFFICE
1	SGL DOOR	342	CORRIDOR / OFFICE

INT SGL OFFICE I/S

Each Assembly to have:

3	EA	HINGE	5BB1 4.5 X 4.5	652	IVE
1	EA	MTS CYL,L CAM	1080-114-SCH "L" CAM 6PIN CYL COLLAR	626	C-R
1	EA	EU STOREROOM LOCK	L9080LEU 17A L283-125	626	SCH
1	EA	KICK PLATE	8400 10" X 2" LDW	630	IVE
1	EA	DOME STOP	FS436/FS438 AS REQUIRED	626	IVE
1	SET	SEALS	160S	AL	NGP
1	EA	MAGNETIC CONTACT	1078		SEN
1	EA	MEMO	CARD READER BY ACCESS CONTROL SECTION		

Heading 34

1	SGL DOOR	218	STUDY / TELEPHONE
1	SGL DOOR	226	CORRIDOR / UTILITY
1	SGL DOOR	228	STUDY / STORAGE
1	SGL DOOR	229	CORRIDOR / UTILITY
1	SGL DOOR	341	CORRIDOR / UTILITY

INT SGL STORAGE - UTILITY O/S

Each Assembly to have:

3	EA	HINGE	5BB1 4.5 X 4.5 NRP	652	IVE
1	EA	POWER TRANSFER	EPT-10	689	VON
1	EA	MTS CYL,L CAM	1080-114-SCH "L" CAM 6PIN CYL COLLAR	626	C-R
1	EA	EU STOREROOM LOCK	L9080LEU 17A L283-125	626	SCH
1	EA	SURFACE CLOSER	DC6200 EDA ARM	689	C-R
1	EA	KICK PLATE	8400 10" X 2" LDW	630	IVE
1	EA	DOME STOP	FS436/FS438 AS REQUIRED	626	IVE
3	EA	SILENCER	SR64	GRY	IVE
1	EA	MAGNETIC CONTACT	1078		SEN
1	EA	MEMO	CARD READER BY ACCESS CONTROL SECTION		

Heading 35

1	SGL DOOR	129	AV RESOURCE CHECK-IN / AV WORKROOM
1	SGL DOOR	130	AV RESOURCE CHECK-IN / AV WORKROOM
1	SGL DOOR	333A	CORRIDOR / LOUNGE

INT SGL WORK ROOM I/S

Each Assembly to have:

3	EA	HINGE	5BB1 4.5 X 4.5 NRP	652	IVE

1	EA	POWER TRANSFER	EPT-10	689	VON
1	EA	MTS CYL,L CAM	1080-114-SCH "L" CAM 6PIN CYL COLLAR	626	C-R
1	EA	EU STOREROOM LOCK	L9080LEU 17A L283-125	626	SCH
1	EA	SURFACE CLOSER	DC6200	689	C-R
1	EA	KICK PLATE	8400 10" X 2" LDW	630	IVE
1	EA	DOME STOP	FS436/FS438 AS REQUIRED	626	IVE
3	EA	SILENCER	SR64	GRY	IVE
1	EA	MAGNETIC CONTACT	1078		SEN
1	EA	MEMO	CARD READER BY ACCESS CONTROL SECTION		

Heading 36

1 SGL DOOR 126A CORRIODOR / IMC / LIBRARY
INT SGL LIBRARY I/S

Each Assembly to have:

3	EA	HINGE	5BB1 4.5 X 4.5	652	IVE
1	EA	CLASSROOM LOCK	L9070L 17A	626	SCH
1	EA	MTS CYL,L CAM	1080-114-SCH "L" CAM 6PIN CYL COLLAR	626	C-R
1	EA	SURFACE CLOSER	DC6200	689	C-R
1	EA	KICK PLATE	8400 10" X 2" LDW	630	IVE
1	EA	DOME STOP	FS436/FS438 AS REQUIRED	626	IVE
1	SET	SEALS	160S	AL	NGP

Heading 37

1 SGL DOOR 131A CORRIODOR / AV RESOURCE CHECK-IN
INT SGL AV CHECK-IN I/S

Each Assembly to have:

3	EA	HINGE	5BB1 4.5 X 4.5 NRP	652	IVE
1	EA	POWER TRANSFER	EPT-10	689	VON
1	EA	MTS CYL,L CAM	1080-114-SCH "L" CAM 6PIN CYL COLLAR	626	C-R
1	EA	EU STOREROOM LOCK	L9080LEU 17A L283-125	626	SCH
1	EA	SURFACE CLOSER	DC6200	689	C-R
1	EA	KICK PLATE	8400 10" X 2" LDW	630	IVE
1	EA	DOME STOP	FS436/FS438 AS REQUIRED	626	IVE
3	EA	SILENCER	SR64	GRY	IVE
1	EA	MAGNETIC CONTACT	1078		SEN
1	EA	MEMO	CARD READER BY ACCESS CONTROL SECTION		

Heading 38

1 SGL DOOR 133A LOBBY / CORRIDOR
INT SGL CORRIDOR O/S

Each Assembly to have:

1	EA	CONTINUOUS HINGE	112HD	628	IVE
1	EA	FIRE EXIT HARDWARE	99L-BE-F 996L-BE	626	VON
1	EA	SURFACE CLOSER	DC6200 EDA ARM	689	C-R

1	EA	KICK PLATE	8400 10" X 2" LDW	630	IVE
1	EA	DOME STOP	FS436/FS438 AS REQUIRED	626	IVE
1	SET	SEALS	9700E HEAD & JAMBS	AL	NGP
1		MEMO	MOUNT SEALS BEFORE INSTALLING CLOSER		

Heading 39

1 PR DOOR 136

INT PAIR 5/0 HIGH

Each Assembly to have:

2	EA	CONTINUOUS HINGE	112HD	628	IVE
1	EA	AUTO FLUSH BOLT	FB31B / FB41 AS REQUIRED	630	IVE
1	EA	STOREROOM LOCK	L9080L 17A	626	SCH
1	EA	MTS CYL,L CAM	1080-114-SCH "L" CAM 6PIN CYL COLLAR	626	C-R
1	EA	ASTRAGAL	139SP	600	NGP
2	EA	OVERHEAD STOP	450S	630	GLY
2	EA	SILENCER	SR64	GRY	IVE

Heading 40

1 SGL DOOR 135A STAIR / CORRIDOR
1 SGL DOOR 347A STAIR / CORRIDOR

INT SGL I/S

Each Assembly to have:

1	EA	CONTINUOUS HINGE	112HD	628	IVE
1	EA	FIRE EXIT HARDWARE	99L-BE-F 996L-BE	626	VON
1	EA	SURFACE CLOSER	DC6200 EDA ARM	689	C-R
1	EA	KICK PLATE	8400 10" X 2" LDW	630	IVE
1	EA	DOME STOP	FS436/FS438 AS REQUIRED	626	IVE
1	SET	SEALS	9700E HEAD & JAMBS	AL	NGP
1	EA	THRESHOLD	513 OR AS DETAILED 1/4-20 COMBO ANCHOR DOOR WIDTH	AL	NGP
1		MEMO	MOUNT SEALS BEFORE INSTALLING CLOSER		

Heading 41

1 SGL DOOR 232 STAIR / CORRIDOR
1 SGL DOOR 347B STAIR / ROOF STAIR

INT SGL STAIR -ROOF STAIR I/S

Each Assembly to have:

3	EA	HINGE	5BB1 4.5 X 4.5 NRP	652	IVE
1	EA	POWER TRANSFER	EPT-10	689	VON
1	EA	MTS CYL,L CAM	1080-114-SCH "L" CAM 6PIN CYL COLLAR	626	C-R
1	EA	EU STOREROOM LOCK	L9080LEU 17A L283-125	626	SCH
1	EA	SURFACE CLOSER	DC6200	689	C-R
1	EA	KICK PLATE	8400 10" X 2" LDW	630	IVE
1	EA	DOME STOP	FS436/FS438 AS REQUIRED	626	IVE

3	EA	SILENCER	SR64	GRY	IVE
1	EA	MAGNETIC CONTACT	1078		SEN
1	EA	MEMO	CARD READER BY ACCESS CONTROL SECTION		

Heading 42

1 SGL DOOR C137A LOBBY / CORRIDOR
INT SGL LOBBY -CORRIDOR O/S

Each Assembly to have:

1	EA	POWER TRANSFER	EPT-10	689	VON
1	EA	CONTINUOUS HINGE	112HD EPT	628	IVE
1	EA	PANIC HARDWARE	RX-LD-99L E996L	626	VON
1	EA	RIM CYLINDER	3080	626	C-R
1	EA	SURFACE CLOSER	DC6200 EDA ARM	689	C-R
1	EA	DOME STOP	FS436/FS438 AS REQUIRED	626	IVE
1	EA	MAGNETIC CONTACT	1078		SEN
1	EA	MEMO	CARD READER BY ACCESS CONTROL SECTION		

Heading 43

1 SGL DOOR 200 CORRIDOR / LECTURE
1 SGL DOOR 202 CORRIDOR / LECTURE
1 SGL DOOR 224 CORRIDOR / CULTURAL RESOURCES
1 SGL DOOR 338 CORRIDOR / LECTURE
1 SGL DOOR 340 CORRIDOR / LECTURE
INT SGL LECTURE O/S (UNDER 50)

Each Assembly to have:

3	EA	HINGE	5BB1 4.5 X 4.5 NRP	652	IVE
1	EA	POWER TRANSFER	EPT-10	689	VON
1	EA	MTS CYL,L CAM	1080-114-SCH "L" CAM 6PIN CYL COLLAR	626	C-R
1	EA	EU STOREROOM LOCK	L9080LEU 17A L283-125	626	SCH
1	EA	SURFACE CLOSER	DC6200 EDA ARM	689	C-R
1	EA	KICK PLATE	8400 10" X 2" LDW	630	IVE
1	EA	DOME STOP	FS436/FS438 AS REQUIRED	626	IVE
3	EA	SILENCER	SR64	GRY	IVE
1		MEMO	MOUNT SEALS BEFORE INSTALLING CLOSER		

Heading 44

1 SGL DOOR 212 CORRIDOR / LECTURE
1 SGL DOOR 214 CORRIDOR / LECTURE
INT SGL LECTURE O/S (UNDER 50)

Each Assembly to have:

3	EA	HINGE	5BB1 4.5 X 4.5 NRP	652	IVE
1	EA	POWER TRANSFER	EPT-10	689	VON
1	EA	MTS CYL,L CAM	1080-114-SCH "L" CAM 6PIN CYL COLLAR	626	C-R
1	EA	EU STOREROOM	L9080LEU 17A L283-125	626	SCH

		LOCK			
1	EA	SURFACE CLOSER	DC6200 EDA ARM	689	C-R
1	EA	KICK PLATE	8400 10" X 2" LDW	630	IVE
1	EA	DOME STOP	FS436/FS438 AS REQUIRED	626	IVE
1	SET	SEALS	9700E HEAD & JAMBS	AL	NGP
1		MEMO	MOUNT SEALS BEFORE INSTALLING CLOSER		

Heading 45

1 SGL DOOR 213A CORRIDOR / LECTURE
1 SGL DOOR 213B CORRIDOR / LECTURE
INT SGL LECTGURE O/S (OVER 50)

Each Assembly to have:

1	EA	POWER TRANSFER	EPT-10	689	VON
1	EA	CONTINUOUS HINGE	112HD EPT	628	IVE
1	EA	FIRE EXIT HARDWARE	99L-F E996L	626	VON
1	EA	RIM CYLINDER	3080	626	C-R
1	EA	SURFACE CLOSER	DC6200 EDA ARM	689	C-R
1	EA	KICK PLATE	8400 10" X 2" LDW	630	IVE
1	EA	DOME STOP	FS436/FS438 AS REQUIRED	626	IVE
1	SET	SEALS	9700E HEAD & JAMBS	AL	NGP
1		MEMO	MOUNT SEALS BEFORE INSTALLING CLOSER		

Heading 46

1 SGL DOOR 301 CORRIDOR / MEETING
INT SGL LECTGURE I/S

Each Assembly to have:

Heading 47

1 SGL DOOR 220 CORRIDOR / STUDY AREA
INT SGL STUDY I/S

Each Assembly to have:

Heading 48

1 SGL DOOR 201 CORRIDOR / SCIENCE / HEALTH RESOURCE LIBRARY
INT SGL LECTURE I/S

Each Assembly to have:

Heading 49

1	SGL DOOR	300	CORRIDOR / AV SERVICE	
1	SGL DOOR	302	CORRIDOR / AV SERVICE	
1	SGL DOOR	307	CORRIDOR / HHPS LIBRARY	
1	SGL DOOR	311	CORRIDOR / FACULTY RESEARCH LIBRARY INT SGL LIBRARY I/S	

Each Assembly to have:

3	EA	HINGE	5BB1 4.5 X 4.5 NRP	652	IVE
1	EA	POWER TRANSFER	EPT-10	689	VON
1	EA	MTS CYL,L CAM	1080-114-SCH "L" CAM 6PIN CYL COLLAR	626	C-R
1	EA	EU STOREROOM LOCK	L9080LEU 17A L283-125	626	SCH
1	EA	SURFACE CLOSER	DC6200	689	C-R
1	EA	KICK PLATE	8400 10" X 2" LDW	630	IVE
1	EA	DOME STOP	FS436/FS438 AS REQUIRED	626	IVE
3	EA	SILENCER	SR64	GRY	IVE
1	EA	MAGNETIC CONTACT	1078		SEN
1	EA	MEMO	CARD READER BY ACCESS CONTROL SECTION		

Heading 50

1	SGL DOOR	306	CORRIDOR / OPEN OFFICE AREA	
1	SGL DOOR	312	CORRIDOR / OPEN OFFICE AREA INT SGL OPEN OFFICE O/S	

Each Assembly to have:

3	EA	HINGE	5BB1 4.5 X 4.5	652	IVE
1	EA	POWER TRANSFER	EPT-10	689	VON
1	EA	MTS CYL,L CAM	1080-114-SCH "L" CAM 6PIN CYL COLLAR	626	C-R
1	EA	EU STOREROOM LOCK	L9080LEU 17A L283-125	626	SCH
1	EA	SURFACE CLOSER	DC6200 EDA ARM	689	C-R
1	EA	KICK PLATE	8400 10" X 2" LDW	630	IVE
1	SET	SEALS	9700E HEAD & JAMBS	AL	NGP
1	EA	MEMO	CARD READER BY ACCESS CONTROL SECTION		
1		MEMO	MOUNT SEALS BEFORE INSTALLING CLOSER		

Heading 51

1	SGL DOOR	326A	CORRIDOR / OPEN OFFICE AREA	
1	SGL DOOR	326C	CORRIDOR / OPEN OFFICE AREA INT SGL OPEN OFFICE I/S	

Each Assembly to have:

3	EA	HINGE	5BB1 4.5 X 4.5	652	IVE
1	EA	POWER TRANSFER	EPT-10	689	VON
1	EA	MTS CYL,L CAM	1080-114-SCH "L" CAM 6PIN CYL COLLAR	626	C-R
1	EA	EU STOREROOM LOCK	L9080LEU 17A L283-125	626	SCH
1	EA	SURFACE CLOSER	DC6200	689	C-R

1	EA	KICK PLATE	8400 10" X 2" LDW	630	IVE
1	EA	DOME STOP	FS436/FS438 AS REQUIRED	626	IVE
1	SET	SEALS	160S	AL	NGP
1	EA	MEMO	CARD READER BY ACCESS CONTROL SECTION		

Heading 52

1 PR DOOR 230 CORRIDOR / ELEVATOR CONTROLS
INT PAIR UTILITY O/S

Each Assembly to have:

1	EA	POWER TRANSFER	EPT-10	689	VON
1	EA	CONTINUOUS HINGE	112HD	628	IVE
1	EA	CONTINUOUS HINGE	112HD EPT	628	IVE
1	EA	AUTO FLUSH BOLT	FB31B / FB41 AS REQUIRED	630	IVE
1	EA	DUST PROOF STRIKE	DP1/DP2	626	IVE
1	EA	COORDINATOR	COR X FL	628	IVE
2	EA	MOUNTING BRKTS	MB1/MB2 AS REQUIRED	600	IVE
1	EA	ASTRAGAL	139SP	600	NGP
2	EA	SURFACE CLOSER	DC6200 EDA ARM	689	C-R
2	EA	KICK PLATE	8400 10" X 1" LDW	630	IVE
2	EA	DOME STOP	FS436/FS438 AS REQUIRED	626	IVE
2	EA	SILENCER	SR64	GRY	IVE
2	EA	MAGNETIC CONTACT	1078		SEN
1	EA	MEMO	CARD READER BY ACCESS CONTROL SECTION		

Heading 53

1 DE DOOR C210 CORRIDOR / CORRIDOR
1 DE DOOR C225A CORRIDOR / CORRIDOR
INT DE PAIR

Each Assembly to have:

2	EA	CONTINUOUS HINGE	112HD	628	IVE
2	EA	FIRE EXIT HARDWARE	9927EO-F-LBR	626	VON
1	SET	ASTRAGAL	9600A	CL	NGP
2	EA	SURFACE CLOSER	DC6200 EDA ARM	689	C-R
2	EA	KICK PLATE	8400 10" X 1" LDW	630	IVE
2	EA	MAGNETIC HOLD-OPEN	SEM 7850 SERIES	AL	LCN
1	EA	MEMO	SMOKE DETECTOR BY FIRE ALARM CONTRACTOR		

Heading 54

1 PR DOOR 308 STAIR / CORRIDOR
INT PAIR STAIR O/S

Each Assembly to have:

2	EA	CONTINUOUS HINGE	112HD	628	IVE
2	EA	FIRE EXIT HARDWARE	9927L-BE-F-LBR 996L-BE	626	VON
1	SET	ASTRAGAL	9600A	CL	NGP
2	EA	SURFACE CLOSER	DC6200 EDA ARM	689	C-R

2	EA	KICK PLATE	8400 10" X 1" LDW	630	IVE
2	EA	DOME STOP	FS436/FS438 AS REQUIRED	626	IVE
1	SET	SEALS	9700E HEAD & JAMBS	AL	NGP
1		MEMO	MOUNT SEALS BEFORE INSTALLING CLOSER		

End of Schedule

Door/Hdwe Index

Door Number	HwSet
100A	18
100B	21
100C	02
100D	03
100E	04
102	22
103	19
104	19
106	24
108A	25
108B	01
108C	05
108D	26
109A	27
109B	06
110A	28
110B	29
110C	30
110D	31
118	32
119	32
120	07
123	33
124	22
125	33
126A	36
126B	10
127	33
128	33
129	35
130	35
131A	37
131B	08
132	09
133A	38
133B	11

135A	40
135B	12
136	39
200	43
201	48
202	43
204	33
205	33
206	33
207	33
208	33
209	33
211	23
212	44
213A	45
213B	45
214	44
216	20
217	20
218	34
219	33
220	47
221	33
222	33
223	33
224	43
226	34
228	34
229	34
230	52
232	41
300	49
301	46
302	49
303A	33
303B	33
304	33
305	33
306	50
307	49
308	54
309	20
310	20
311	49
312	50
313	33
314	33
315	33
317	33
318	33
319	33
321	33

322	33
323	33
324	33
325	33
326	33
326A	51
326C	51
327	33
329	33
330	33
331	33
332	33
333A	35
333B	17
334	33
335	33
336	33
338	43
340	43
341	34
342	33
345	23
347A	40
347B	41
348B	14
C101	13
C101A	16
C137A	42
C137B	11
C210	53
C225A	53
C225B	15

SECTION 08 81 00

GLAZING

PART 1 - GENERAL

1.01 DESCRIPTION: Division 1 applies to this Section. Provide glass, glazing, and glazing accessories, complete.

A. Related sections include:

1. 08 43 13 Aluminum Framed Storefronts
2. 08 51 13 Aluminum Windows

1.02 QUALITY ASSURANCE:

A. Quality Standards: In addition to Code, glass installations shall comply with ANSI Z97.1, as applicable, and Federal Safety Standard 16 CFR 1201.

B. Glass Manufacturers' Usage Recommendations: Furnish each manufacturer's written analysis of glass usage for the exterior glass installations regarding adverse shading conditions and other problems that may occur as a result of the building geometry and glass exposures, with recommended solutions. If no such problems are anticipated by a glass manufacturer, the pertinent written analysis shall so state.

C. Safety Glazing: Provide safety glazing at all openings subject to human impact per CBC.

1.03 SUBMITTALS: Refer to Section 01 33 00 for procedures.

A. Samples and Product Data: Submit the following:

1. Samples of various glasses called for on the drawings, 9" square with smooth edges.
2. Each glass manufacturer's detailed recommendations and instructions for preparation of glazed openings and installation of glass. With the instructions, submit glass manufacturer's written recommendations for setting blocks and shims, jamb blocks and shims, wedge glazing gaskets, and fixed glazing gaskets to be used for installation of the manufacturer's glasses; include type and placement for each item.
3. Glazing channels or gaskets, 12" long.
4. Manufacturer's technical data for glazing gaskets, weathering gaskets, tapes, separators, setting and side blocks, and other glass setting material showing conformance with requirements specified, including warranties, coordinated with glass manufacturer's recommendations and instructions.
5. Samples of cured glazing sealants with technical Product Data.
6. Wall mirrors, 12" square with manufacturer's data for mirror, stainless steel J-moldings, primer and adhesive, and warranty.

B. Full-Size Samples: Install full-size samples of glasses specified below, installed in the frames forming a part of the Work. Locations shall be designated by the Architect. Glass showing defects, including excessive distortion, which detract from artistic effect, appearance, and design concept of the building, in the Architect's opinion, shall be removed and acceptable glass installed

at no extra cost to the Owner. Approved sample installations establish the standard of quality required for glass installations of the same kinds and types. Full-size samples are required for:

1. Each type of tempered glass.
2. Insulating glass units.

C. Certificates: Submit from manufacturer stating the quality, thickness, and type of all unlabeled glass delivered to the site for field cutting..

1.04 JOB CONDITIONS: Protect glazing until completion and final acceptance of the Work. Repair or replace damaged or defective glazing to original specified condition, at no extra cost to the Owner. Damaged or defective glazing includes glass that cannot be properly cleaned.

1.05 WARRANTY: Warranty exterior glass installations against loosening, air or water leakage, glass pop-outs, deterioration, and all other defects for 5 years from the date of final acceptance by the owner.

A. Glazing Channels and Gaskets: Warranty for 5 years against all defective material or deterioration including, without limitation, shrinkage causing loss of seal and physical failure due to exposure to sun, ozone, elements, smog and other air pollution, and commercial glass cleaners.

B. Insulating Glass Units: Warranty against loss of hermetic seal or other defect for 10 years from date of final acceptance by the owner of the facility.

C. Unframed Wall Mirrors: Warranty against silver spoilage for 10 years from the date of final acceptance.

PART 2 - PRODUCTS

2.01 GLASS MATERIALS: Glass of domestic manufacture, conforming to ASTM C1036 and ASTM C1048, except total distortion tolerances of ASTM C1048 do not govern over requirements in this Section, and to ANSI Z97.1, by Viracon, PPG Industries, Inc., Libby-Owens-Ford or approved equal. Label all factory cut panes and do not remove labels until directed. Do not cut unlabeled glass delivered to site as material for field cutting until glass is approved by Architect.

A. Plate Glass: Clear Type I, Class 1, quality q3 float, 1/2" thick unless otherwise indicated or specified, heat strengthened unless tempered glass is indicated or required.

B. Heat Strengthened and Tempered Glass: Heat strengthen or temper the above glasses as shown, required by Code, or required to meet wind load or performance requirements. Handle and size glass according to manufacturer's instructions. On each sheet of tempered vision glass, provide an inconspicuous visible label fused to glass and placed in lower corner, identifying tempered glass. Provide fireman's tempered glass label where shown or required by local Fire Department. Furnish clear, tinted plate glass, or reflective glass as indicated, specified, or required.

1. Process: Perform heat strengthening and tempering by the horizontal roller gas hearth process only. Process that produce tong or gripper marks are not acceptable.

2. Glass Heat Soak Tests: Subject all tempered glass to a heat soak test in the manufacturer's plant. Glass surface temperature and duration of the test shall be sufficient to produce the highest probability of breakage for lights containing inclusions, but not less than 554 deg F for 6 hours. Submit written record of heat soak test to Architect. Record shall indicate test conditions, date of test, number and size of lights tested per load, spacing of lights in oven, time glass was in the heat soak furnace, and test results (i.e. number of lights which broke). Heat soak tests are subject to inspection by Architect.

C. Heat Reflecting Coating: Where scheduled, provide above glasses with a Low 'E' coating with following characteristics:
1. Visible Light Transmittance: 0.53
2. Visible Light Reflectance (Exterior): 30%
3. Relative Heat Gain: 81 Btu/(hr x sq. ft.).

D. Insulating Glass Units: Provide all insulating glass units certified to Class CBA by ASTM E773 test method and to ASTM E774 specification requirements through the IGCC. Units shall have the IGCC label and A Classification etched in the corner of the unit. Furnish manufacturer's IGCC Class CBA certification.

1. Type: As selected or scheduled, nominal 1/4" thick, with Low E coating and nominal 1/2" dessicated air space at windows and doors, sloped or flat glazing bead as shown or selected but consistent for all insulating units and doors.

2. Panes: Fully temper one or both panes where shown, required by Code, or required by Quality Standards under "Quality Assurance". Provide glass as shown including Low E coating.
a. Where translucent glazing is called for, apply simulated acid-etch frit (Viracon V-1085 shall be the basis of design) to the number two pane.

3. Altitude Adjustment: Include altitude adjustment provisions of type standard with unit manufacturer and that preserves the integrity of dessicated air space as required for transportation to the site.

4. Precaution: Verify that polymer glazing sealants are chemically and physically compatible with insulating glass unit separators and sealants and are approved by the insulating glass unit manufacturer.

F. Wall Mirrors: Mirror quality float glass, 1/4" thick, edges finished and polished, double silvered with electro-deposited copper coating plus an organic protective coating. Provide stainless steel angle frame as shown on the drawings.

G. Intent: Tempered glasses are an important part of the artistic effect of the building design, and shall conform to the standard of quality established by the approved full-size Sample installations.

2.02 GLASS SETTING MATERIALS:

A. Glazing Channels and Gaskets: Extruded neoprene conforming to AAMA SG-1, meeting 5 year warranty requirements, approved colors, sponge units of 40 +/- 5 Durometer Shore A, designed for 20% to 35% compression; dense units of 70 +/- 5 Durometer Shore A for hollow profiles and 60 +/- 5 for solid profiles. Vulcanize gasket corners, both sponge and dense. Provide units

designed to produce glass edge pressure of 4 pounds minimum and 10 pounds maximum per linear inch.

B. Blocks and Spacers: Setting blocks of solid neoprene or silicone rubber having 85 +/- 5 Durometer Shore A, block length equal to 0.1" per square foot of glass area but minimum 4" length with length increased as required to eliminate point loading, width not less than width of glazing pocket less 1/8", profiled and secured not to slip during installation and not to obstruct proper drainage of glazing cavity. Provide shims of same material, hardness, width, and length as setting blocks. Provide neoprene or silicone rubber side blocks of 55 +/- 5 Durometer Shore A.

C. Glazing Sealants: For use at glazing perimeters, acceptable sealants are GE Silglaze 2400, GE Silpruf, GE 1200 Silicone, and Dow Corning 795 or 995. For other joints select appropriate sealant for joint size, movement, and substrate; acceptable sealants include GE 1200 Silicone or Silpruf, or Dow Corning 795 and 995, or, where approved, 790. Polybutylene, oleoresinous, asphalt, and oil base sealants are not allowed for any use. Provide sealants of approved colors.

D. Mirror Setting Materials: Palmer Products Corp. "Mirro-Mastic" adhesive, "Mirro-Mastic Bond" primer, and "Mirro-Bac" backing paint.

PART 3 - EXECUTION

3.01 GLAZING: Employ skilled and experienced glaziers. Set glass airtight and true with glazing channels or gaskets according to the "Glazing Manual" of Flat Glass Marketing Association, glass manufacturer's instructions, and as required herein to obtain weatherproof and waterproof installations. Conform glass edge clearances, and face and edge laps (bite), to Code and requirements herein. Set glass in rabbets with glazing blocks and spacers so glass does not contact frame and to preclude looseness and rattling. Use glass with straight smooth-finished edges free of cracks, chips, swiping, seaming, stress foci, or any other defects on surfaces or edges for all glass installations.

A. Setting Blocks: Unless otherwise recommended by glass manufacturer or in the FGMA "Glazing Manual" for type of glass installation, provide setting blocks of the correct size located at the bottom quarter points of each glass pane, and side blocks in both jambs in upper half of panes retained by metal caps.

B. Glazing Gaskets and Channels: Compress at least 15% by stops and at least 5% lengthwise to prevent corner pullout, but do not exceed allowable compressive forces on glass.

C. Glazing Sealant: Ensure sealant installations form a continuous airtight and watertight seal for entire perimeter of each glass pane. For glass secured by metal frames or stops on two or more edges, hold glazing gaskets or channels back at least 1/8" from the sight lines and fill the voids with glazing sealant finished flush with stops, sealant installed on interior side of glass.

D. Exposed Glass Edges or Butt Glazing: Provide glass with the exposed edges ground straight, smooth, and slightly rounded where edges remain exposed or are butt glazed with sealant. Where sealant is indicated at interior installations, set joints close but not in contact and fill with glazing sealant of approved color, free of bubbles or voids and tool slightly concave. Immediately remove smears from glass.

E. Insulating Glass Units: Conform tolerances, edge clearances, frame laps, and setting of blocks and spacers to manufacturer's published requirements with spacing and sizes of blocks adequate to prevent improper point loadings. Place units with glazing gaskets or channels compressed at least 5% lengthwise during setting. Cut gasket legs down at least 1/8" below sight lines and fill the void with a clear silicone sealant having minimum 1/8" sealant-to-glass contact with sealant finished flush with stops. Do not block weep holes in supporting frame members.

F. Mirrors: Clean backings, apply primer, and allow to dry. Verify organic coating on the backs of mirrors is compatible with the adhesive; if not, apply the mirror adhesive manufacturer's recommended backing paint and allow to dry. Conform to the adhesive manufacturer's instructions and apply adhesive in spots that, when compressed, will cover not less than 60% of the mirror area. Allow 3/16" space between mirror back and substrate. If mirror is cut from a larger mirror sheet, apply backing paint on cut backing edge. Brace installed mirrors in place until adhesive is fully set.

3.02 COMPLETION: Conform to Section 01 77 00. Do not use any harsh or abrasive cleaning agents, caustics, or acids for cleaning. Wash and polish vision glass both sides and leave glass free of soiling, streaks and labels. Wash and polish mirrors.

END OF SECTION

SECTION 09 21 16

GYPSUM BOARD ASSEMBLIES

PART 1 GENERAL

1.01 SECTION INCLUDES

A. Performance criteria for gypsum board assemblies.

B. Metal stud wall framing.

C. Shaft wall system.

D. Gypsum sheathing.

E. Gypsum wallboard.

F. Joint treatment and accessories

G. Gypsum board ceilings

1.02 RELATED REQUIREMENTS

A. Section 05 40 00 - Cold-Formed Metal Framing: Exterior wind-load-bearing metal stud framing.

B. Section 07 21 00 - Thermal Insulation: Acoustic and thermal insulation.

C. Section 07 25 00 - Weather Barriers: Water-resistive barrier over sheathing.

D. Section 07 84 00 - Firestopping: Top-of-wall assemblies at fire rated walls.

E. Section 07 90 05 - Joint Sealers: Acoustic sealant.

F. Section 09 22 16 - Non-Structural Metal Framing.

G. Section 09 30 00 - Tiling (Tile): Tile backing board.

1.03 REFERENCE STANDARDS

A. ASTM C 475/C 475M - Standard Specification for Joint Compound and Joint Tape for Finishing Gypsum Board; 2002 (Reapproved 2007).

B. ASTM C 645 - Standard Specification for Nonstructural Steel Framing Members; 2009.

C. ASTM C 754 - Standard Specification for Installation of Steel Framing Members to Receive Screw-Attached Gypsum Panel Products; 2009.

D. ASTM C 840 - Standard Specification for Application and Finishing of Gypsum Board; 2008.

E. ASTM C 954 - Standard Specification for Steel Drill Screws for the Application of Gypsum Panel Products or Metal Plaster Bases to Steel Studs From 0.033 in. (0.84 mm) to 0.112 in. (2.84 mm) in Thickness; 2007.

F. ASTM C 1002 - Standard Specification for Steel Self-Piercing Tapping Screws for the Application of Gypsum Panel Products or Metal Plaster Bases to Wood Studs or Steel Studs; 2007.

G. ASTM C 1047 - Standard Specification for Accessories for Gypsum Wallboard and Gypsum Veneer Base; 2010a.

H. ASTM C 1177/C 1177M - Standard Specification for Glass Mat Gypsum Substrate for Use as Sheathing; 2008.

I. ASTM C 1278/C 1278M - Standard Specification for Fiber-Reinforced Gypsum Panel; 2007a.

J. ASTM C 1280 - Standard Specification for Application of Gypsum Sheathing; 2009.

K. ASTM C 1396/C 1396M - Standard Specification for Gypsum Board; 2009.

L. ASTM C 1629/C 1629 - Standard Classification for Abuse-Resistant Nondecorated Interior Gypsum Panel Products and Fiber-Reinforced Cement Panels; 2006.

M. ASTM C 1658/C 1658M - Standard Specification for Glass Mat Gypsum Panels; 2006.

N. ASTM D 3273 - Standard Test Method for Resistance to Growth of Mold on the Surface of Interior Coatings in an Environmental Chamber; 2000 (Reapproved 2005).

O. ASTM E 72 - Standard Test Methods of Conducting Strength Tests of Panels for Building Construction; 2005.

P. ASTM E 90 - Standard Test Method for Laboratory Measurement of Airborne Sound Transmission Loss of Building Partitions and Elements; 2009.

Q. ASTM E 413 - Classification for Rating Sound Insulation; 2010.

R. GA-216 - Application and Finishing of Gypsum Board; Gypsum Association; 2007.

S. GA-600 - Fire Resistance Design Manual; Gypsum Association; 2006.

T. UL (FRD) - Fire Resistance Directory; Underwriters Laboratories Inc.; current edition.

1.04 SUBMITTALS

A. See Section 01 33 00 - Submittal Procedures.

B. Product Data: Provide data on gypsum board, glass mat faced gypsum board, accessories, and joint finishing system.

C. Test Reports: For all stud framing products that do not comply with ASTM C 645 or C 754, provide independent laboratory reports showing maximum stud heights at required spacings and deflections.

D. Samples: Submit two samples of gypsum board finished with proposed texture application, 12 by 12 inches (300 by 300 mm) in size, illustrating finish color and texture.

E. LEED Submittals:
   1. For gypsum wallboard, submit documentation of recycled content and location of manufacture, MR 4.1 and 4.2.

1.05 QUALITY ASSURANCE

A. Installer Qualifications: Company specializing in performing gypsum board application and finishing, with minimum 10 years of experience.

PART 2 PRODUCTS

2.01 GYPSUM BOARD ASSEMBLIES

A. Provide completed assemblies complying with ASTM C 840 and GA-216.

B. Interior Partitions: Provide completed assemblies with the following characteristics:
   1. Acoustic Attenuation: STC of 45-49 calculated in accordance with ASTM E 413, based on tests conducted in accordance with ASTM E 90.

C. Shaft Walls at HVAC Shafts: Provide completed assemblies with the following characteristics:

1. Air Pressure Within Shaft: Sustained loads of 5 lbf/sq ft (0.24 kPa) with maximum mid-span deflection of L/240.
2. Acoustic Attenuation: STC of 35-39 calculated in accordance with ASTM E 413, based on tests conducted in accordance with ASTM E 90.

D. Shaft Walls at Elevator Shafts: Provide completed assemblies with the following characteristics:
1. Air Pressure Within Shaft: Intermittent loads of 5 lbf/sq ft (0.24 kPa) with maximum mid-span deflection of L/240.
2. Acoustic Attenuation: STC of 35-39 calculated in accordance with ASTM E 413, based on tests conducted in accordance with ASTM E 90.

E. Fire Rated Assemblies: Provide completed assemblies with the following characteristics:
1. Fire Rated Partitions: UL listed assembly No. U465 and U445; 1 hour rating.
2. Fire Rated Shaft Walls: UL listed assembly No. U415 1 & 2 hour rating.
3. UL Assembly Numbers: Provide construction equivalent to that listed for the particular assembly in the current UL Fire Resistance Directory.

2.02 BOARD MATERIALS

A. Manufacturers - Gypsum-Based Board:
1. CertainTeed Corporation: www.certainteed.com.
2. Georgia-Pacific Gypsum LLC: www.gp.com/gypsum.
3. National Gypsum Company: www.nationalgypsum.com.
4. USG Corporation: www.usg.com.
5. Substitutions: See Section 01 60 00 - Product Requirements.

B. Wallboard: Paper-faced gypsum wallboard as defined in ASTM C 1396/C 1396M; sizes to minimize joints in place; ends square cut.
1. Application: Use for vertical surfaces and ceilings, unless otherwise indicated.
2. Glass-mat-faced gypsum panels as defined in ASTM C 1658/C 1658M, suitable for paint finish, of the same core type and thickness may be substituted for paper-faced board.
3. Mold Resistance: Score of 10, when tested in accordance with ASTM D 3273.
   a. Mold-resistant board is required whenever board is being installed before the building is enclosed and conditioned.
4. At Assemblies Indicated with Fire-Rating: Use type required by indicated tested assembly; if no tested assembly is indicated, use Type X board, UL or WH listed.
5. Thickness:
   a. Vertical Surfaces: 5/8 inch (16 mm).
   b. Ceilings: 5/8 inch (16 mm).
   c. Multi-Layer Assemblies: Thicknesses as indicated on drawings.
6. Glass-Mat-Faced Products:
   a. Georgia-Pacific Gypsum LLC; DensArmor Plus Abuse Guard.
   b. Substitutions: See Section 01 60 00 - Product Requirements.

C. Impact-Rated Wallboard: Tested to Level 3 soft-body and hard-body impact in accordance with ASTM C 1629.
1. Application: All Corridors.
2. Mold Resistance: Score of 10, when tested in accordance with ASTM D 3273.
3. Paper-Faced Type: Gypsum wallboard as defined in ASTM C 1396/C 1396M.
4. Unfaced Type: Interior fiber-reinforced gypsum panels as defined in ASTM C 1278/C 1278M.
5. Type: Fire-resistance rated Type X, UL or WH listed.
6. Thickness: 5/8 inch (16 mm).
7. Edges: Tapered.
8. Products:
   a. National Gypsum Company; Gold Bond Hi-Impact Brand XP Wallboard.

b. USG Corporation; Fiberock Brand Panels--VHI Abuse-Resistant.
c. Substitutions: See Section 01 60 00 - Product Requirements.

D. Backing Board For Non-Wet Areas: Water-resistant gypsum backing board as defined in ASTM C 1396/C 1396M; sizes to minimum joints in place; ends square cut.
1. Application: Vertical surfaces behind thinset tile, except in wet areas.
2. Type: Regular and Type X, in locations indicated.
3. Type X Thickness: 5/8 inch (16 mm).
4. Regular Board Thickness: 1/2 inch (13 mm).
5. Edges: Tapered.
6. Products:
a. American Gypsum; M-Bloc.
b. CertainTeed Corporation; ProRoc Brand Moisture Resistant Gypsum Board ("Greenboard").
c. Georgia-Pacific Gypsum LLC; ToughRock Moisture-Guard Gypsum Board ("Greenboard").
d. National Gypsum Company; Gold Bond Brand XP Gypsum Board.
e. USG Corporation; Sheetrock Brand Mold Tough Gypsum Panels.
f. Substitutions: See Section 01 60 00 - Product Requirements.

E. Exterior Sheathing Board: Sizes to minimize joints in place; ends square cut.
1. Application: Exterior sheathing, unless otherwise indicated.
2. Glass-Mat-Faced Sheathing: Glass mat faced gypsum substrate as defined in ASTM C 1177/C 1177M.
3. Core Type: Regular.
4. Regular Board Thickness: 1/2 inch (13 mm).
5. Edges: Square, for vertical application.
6. Glass-Mat-Faced Products:
a. CertainTeed Corporation; GlasRoc Brand.
b. Georgia-Pacific Gypsum LLC; DensGlass Gold Sheathing.
c. National Gypsum Company; Gold Bond Brand e2XP Extended Exposure Sheathing.
d. Substitutions: See Section 01 60 00 - Product Requirements.

F. Shaftwall and Coreboard: Type X; 1 inch (25 mm) thick by 24 inches (610 mm) wide, beveled long edges, ends square cut.
1. Paper Faced Type: Gypsum shaftliner board or gypsum coreboard as defined ASTM C 1396/C 1396M; water-resistant faces.
2. Products:
a. American Gypsum; Shaft Liner.
b. CertainTeed Corporation; ProRoc Brand Shaftliner Type X.
c. National Gypsum Company; Gold Bond Brand 1" Fire-Shield Shaftliner.
d. National Gypsum Company; Gold Bond Brand 1" Fire-Shield Shaftliner XP (mold-resistant).
e. Pacific Coast Building Products, Inc; PABCORE Gypsum Shafliner Board type X.
f. Temple-Inland Inc; SilentGuard Gypsum Shaftliner.
g. USG Corporation; Sheetrock Gypsum Liner Panels.
h. USG Corporation; Sheetrock Gypsum Liner Panels--Enhanced (mold-resistant).
i. Substitutions: See Section 01 60 00 - Product Requirements.

2.03 ACCESSORIES

A. Acoustic and Thermal Insulation: As specified in Section 07 21 00.

B. Acoustic Sealant: As specified in Section 07 90 05.

C. Finishing Accessories: ASTM C 1047, galvanized steel or rolled zinc, unless otherwise indicated.

1. Types: As detailed or required for finished appearance.
2. Special Shapes: In addition to conventional cornerbead and control joints, provide U-bead at exposed panel edges.

D. Joint Materials: ASTM C 475 and as recommended by gypsum board manufacturer for project conditions.

E. High Build Drywall Surfacer: Vinyl acrylic latex-based coating for spray application, designed to take the place of skim coating and separate paint primer in achieving Level 5 finish.

F. Screws for Attachment to Steel Members Less Than 0.03 inch (0.7 mm) In Thickness, to Wood Members, and to Gypsum Board: ASTM C 1002; self-piercing tapping type; cadmium-plated for exterior locations.

G. Screws for Attachment to Steel Members From 0.033 to 0.112 inch (0.8 to 2.8 mm) in Thickness: ASTM C 954; steel drill screws for application of gypsum board to loadbearing steel studs.

PART 3 EXECUTION

3.01 EXAMINATION

A. Verify that project conditions are appropriate for work of this section to commence.

3.02 SHAFT WALL INSTALLATION

A. Shaft Wall Framing: Install in accordance with GA-600 requirements.
   1. Install studs at spacing required to meet performance requirements.

B. Shaft Wall Liner: Cut panels to accurate dimension and install sequentially between special friction studs.

3.03 FRAMING INSTALLATION

A. Metal Framing: Install in accordance with ASTM C 754.

B. Studs: Space studs as indicated.
   1. Extend partition framing to structure where indicated and to ceiling in other locations.
   2. Partitions Terminating at Ceiling: Attach ceiling runner securely to to ceiling framing in accordance with details.

3.04 ACOUSTIC ACCESSORIES INSTALLATION

A. Acoustic Insulation: Place tightly within spaces, around cut openings, behind and around electrical and mechanical items within partitions, and tight to items passing through partitions.

B. Acoustic Sealant: Install in accordance with manufacturer's instructions.

3.05 BOARD INSTALLATION

A. Comply with ASTM C 840, GA-216, and manufacturer's instructions. Install to minimize butt end joints, especially in highly visible locations.

B. Fire-Rated Construction: Install gypsum board in strict compliance with requirements of assembly listing.

C. Exterior Sheathing: Comply with ASTM C 1280. Install sheathing vertically, with edges butted tight and ends occurring over firm bearing.

3.06 INSTALLATION OF TRIM AND ACCESSORIES

A. Control Joints: Place control joints consistent with lines of building spaces and as indicated.

B. Corner Beads: Install at external corners, using longest practical lengths.

C. Edge Trim: Install at locations where gypsum board abuts dissimilar materials and as indicated.

3.07 JOINT TREATMENT

A. Finish gypsum board in accordance with levels defined in ASTM C 840, as follows:

1. Level 4: Walls and ceilings to receive paint finish or wall coverings, unless otherwise indicated.
2. Level 3: Walls to receive textured wall finish.
3. Level 2: In utility areas, behind cabinetry, and on backing board to receive tile finish.
4. Level 1: Fire rated wall areas above finished ceilings, whether or not accessible in the completed construction.

B. Tape, fill, and sand exposed joints, edges, and corners to produce smooth surface ready to receive finishes.
1. Feather coats of joint compound so that camber is maximum 1/32 inch (0.8 mm).
2. Taping, filling and sanding is not required at base layer of double layer applications.

C. Where Level 5 finish is indicated, spray apply high build drywall surfacer over entire surface after joints have been properly treated; achieve a flat and tool mark-free finish.

END OF SECTION

SECTION 09 22 16

NON-STRUCTURAL METAL FRAMING

PART 1 GENERAL

1.01 SECTION INCLUDES

A. Metal partition, ceiling, and soffit framing.

1.02 RELATED REQUIREMENTS

A. Section 07 21 00 - Thermal Insulation: Acoustic Insulation.

B. Section 09 21 16 - Gypsum Board Assemblies: Metal studs for gypsum board partition framing.

1.03 REFERENCE STANDARDS

A. ASTM C 645 - Standard Specification for Nonstructural Steel Framing Members; 2009.

B. ASTM C 754 - Standard Specification for Installation of Steel Framing Members to Receive Screw-Attached Gypsum Panel Products; 2009.

C. ASTM C 1002 - Standard Specification for Steel Self-Piercing Tapping Screws for the Application of Gypsum Panel Products or Metal Plaster Bases to Wood Studs or Steel Studs; 2007.

D. SSPC-Paint 20 - Zinc-Rich Primers (Type I, "Inorganic," and Type II, "Organic"); Society for Protective Coatings; 2002 (Ed. 2004).

1.04 SUBMITTALS

A. See Section 01 33 00 - Submittal Procedures.

B. Shop Drawings:
   1. Indicate prefabricated work, component details, stud layout, framed openings, anchorage to structure, acoustic details, type and location of fasteners, accessories, and items of other related work.
   2. Describe method for securing studs to tracks, splicing, and for blocking and reinforcement of framing connections.

C. Product Data: Provide data describing framing member materials and finish, product criteria, load charts, and limitations.

D. LEED Submittal: Documentation of recycled content and location of manufacture, MR 4.1 and 4.2

1.05 QUALITY ASSURANCE

A. Installer Qualifications: Company specializing in performing the work of this section with minimum ten years experience.

PART 2 PRODUCTS

2.01 MANUFACTURERS

A. Metal Framing, Connectors, and Accessories:
   1. Dietrich Metal Framing; www.dietrichindustries.com.
   2. Clark Western; www.clarkwestern.com.

3. Substitutions: See Section 01 60 00 - Product Requirements.

2.02 FRAMING MATERIALS

A. Fire Rated Assemblies: Comply with applicable code and as indicated on drawings.

B. Non-Loadbearing Framing System Components: ASTM C 645; galvanized sheet steel, of size and properties necessary to comply with ASTM C 754 for the spacing indicated, with maximum deflection of wall framing of L/240 at 5 psf. Minimum 20 gauge studs.
   1. Studs: C shaped with flat or formed webs.
   2. Runners: U shaped, sized to match studs.
   3. Ceiling Channels: C shaped.
   4. Furring: Hat-shaped sections, minimum depth of 7/8 inch.

C. Partition Head to Structure Connections: Provide track fastened to structure with legs of sufficient length to accommodate deflection, for friction fit of studs cut short and fastened as indicated on drawings.

D. Tracks and Runners: Same material and thickness as studs, bent leg retainer notched to receive studs with provision for crimp locking to stud.

E. Furring and Bracing Members: Of same material as studs; thickness to suit purpose; complying with applicable requirements of ASTM C 754.

F. Fasteners: ASTM C 1002 self-piercing tapping screws.

G. Metal Backing: 0.060 inch thick, galvanized for mounting equipment and accessories.

H. Anchorage Devices: Power actuated.

I. Acoustic Insulation: As specified in Section 07 21 00.

J. Acoustic Sealant: As specified in Section 07 90 05.

K. Touch-Up Primer for Galvanized Surfaces: SSPC-Paint 20, Type I - Inorganic.

2.03 FABRICATION

A. Fabricate assemblies of framed sections to sizes and profiles required.

B. Fit, reinforce, and brace framing members to suit design requirements.

PART 3 EXECUTION

3.01 EXAMINATION

A. Verify existing conditions before starting work.

3.02 INSTALLATION OF STUD FRAMING

A. Comply with requirements of ASTM C 754.

B. Extend partition framing to structure where indicated and to ceiling in other locations.

C. Partitions Terminating at Ceiling: Attach ceiling runner securely to structure as detailed.

D. Partitions Terminating at Structure: Attach extended leg top runner to structure, maintain clearance between top of studs and structure, and brace both flanges of studs as indicated.

E. Align and secure top and bottom runners at 24 inches on center.

F. Fit runners under and above openings; secure intermediate studs to same spacing as wall studs.

G. Align stud web openings horizontally.

H. Secure studs to tracks using crimping method. Do not weld.

I. Fabricate corners using a minimum of three studs.

J. Double stud at wall openings, door and window jambs, not more than 2 inches from each side of openings.

K. Coordinate installation of bucks, anchors, and blocking with electrical, mechanical, and other work to be placed within or behind stud framing.

3.03 CEILING AND SOFFIT FRAMING

A. Install furring after work above ceiling or soffit is complete. Coordinate the location of hangers with other work.

B. Install furring independent of walls, columns, and above-ceiling work.

C. Securely anchor hangers to structural members or embed in structural slab. Space hangers as required to limit deflection to criteria indicated. Use rigid hangers at exterior soffits.

D. Space main carrying channels at maximum 72 inch on center, and not more than 6 inches from wall surfaces. Lap splice securely.

E. Securely fix carrying channels to hangers to prevent turning or twisting and to transmit full load to hangers.

F. Place furring channels perpendicular to carrying channels, not more than 2 inches from perimeter walls, and rigidly secure. Lap splices securely.

3.04 TOLERANCES

A. Maximum Variation From True Position: 1/8 inch in 10 feet.

B. Maximum Variation From Plumb: 1/8 inch in 10 feet.

END OF SECTION

SECTION 09 24 23

PORTLAND CEMENT STUCCO

PART 1 - GENERAL

1.01 WORK INCLUDED

A. Metal lathing and accessories.

B. Lathing using stucco netting and accessories.

C. Three coat stuccowork for paint finish.

D. Plastering accessories.

1.02 RELATED WORK

A. Non-Struct'l Metal Framing: Section 09 22 16

B. Concrete Unit Masonry: Section 04 22 00

1.03 QUALITY ASSURANCE AND CONTROL

A. Conform to the California Building Code, 2010 Edition.

B. Slump Test ASTM C143, modified slump cone 2" x 4" x 6"; maximum slump 2-1/2".

1.04 REFERENCE STANDARDS

A. American Society For Testing and Materials (ASTM):

1. ASTM C 144, Aggregate For Masonry Mortar.

2. ASTM C 150, Portland Cement.

3. ASTM C 206, Finishing Hydrated Lime.

B. American National Standard Institute (ANSI):

1. ANSI A 42.2 Specifications for Portland Cement Stucco.

C. Federal Specifications (FS):
1. FS UU-B-790a.

1.05 SUBMITTALS

A. PRODUCT DATA: Provide data on materials, characteristics and limitations of products Specified.

B. SAMPLES: Submit 24" x24" samples illustrating colors and texture and samples of all

accessories to include expansion joints and reveals.

1.06 FIELD MOCK-UP

A. Construct 10’ x 10’ panel to include one control joint, reveal, edge condition at window opening and one corner condition, using materials and methods specified herein, for review by Architect. Reviewed and approved mock-ups may be left in place as part of the work.

B. Accepted surface finish of mock-up establishes minimum standard of quality and workmanship of lath and stuccowork for project.

C. Advise Architect of start date of finish coat of stucco work 48 hours prior to commencing. Contractor shall apply approximately 100 square feet of finish coat of stuccowork, in all colors scheduled, to building for Architect's review of color texture and other portions of specifications before proceeding. Architect shall determine location(s) for initial application.

D. Any work installed that fails to meet these guidelines shall be subjected to removal and replacement at the Contractor's expense.

1.06 ENVIRONMENTAL CONDITIONS

A. Cold Weather Requirements:

1. Do not use frozen materials in stucco mixes.

2. Do not apply stucco when ambient temperature is less than 45◦ F.

3. Do not apply stucco in fog, rain or high humidity conditions without approval from Architect.

4. Protect stucco from uneven and excessive moisture gain during cold, wet weather.

B. Hot Weather Requirements:

1. Protect stucco from uneven and excessive evaporation during hot, dry weather.

PART 2 - PRODUCTS

2.01 LATHING MATERIALS

A. Paperbacked Stucco Netting at Walls:

1. Stucco netting conforming to ANSI A 42.2.

2. Mesh: 1-1/2”, 17 gauge, galvanized, 1.8 lbs. per sq. yd. minimum weight.

3. Paper: Waterproofed and conforming to FS UU-B-790a, Type 1, Grade D, 2 layers.

4. Material: K-Lath Corp., Type SFB or approved equal.

B. Expanded Metal Lath at Soffits:

1. Gold Bond Building Products, or approved equal.
2. 3/8" high ribbed expanded metal lath.

3. Paper: Waterproofed and conforming to FS UU-B-790a, Type 1, Grade D, 2 layers.

C. Lathing Accessories:

1. Furring Nails: ½" wide, 1-1/2" long No. 9 gauge ring shank.

2. Expansion joints: Inryco, Inc. Milcor No. 15 or approved equal.

3. Casting beads: Inryco, Inc. Milcor No. 60 or approved equal.

4. Tie wire: 18 gage galvanized.

D. Provide J-Hooks at soffits as required by CBC.

2.02 STUCCO MATERIALS

A. Portland Cement: ASTM C 150, Type I.

B. Plastic Cement: ASTM C 150, Type I cement with added plasticizers not exceeding 12% total volume of cement.

C. Lime: ASTM C 206.

D. Sand: Clean and well-graded from coarse to fine, conforming to ASTM C 144 except that gradation of sand for base coats shall be graded within the following limits:

Percent Retained by Weight (±2%)

Sieve Size	Maximum	Minimum
No. 4	0	0
No. 8	10	0
No. 16	40	10
No. 30	65	30
No. 50	90	70
No. 100	100	95

E. Water: Clean, free of injurious amounts of oil, acids, alkalis, salts, organic materials, or other substances which may be deleterious to lath or stucco.

F. Finish Coat: Factory prepared plaster as required to achieve scheduled finish to match existing buildings.

G. Bonding Compound:

1. ASTM C 631, non-oxidizing, non-crystallizing.

2. Unaffected by re-application of moisture.

2.03 STUCCO MIXES

A. General:

1. Accurately proportion materials for each plaster batch with measuring devices of known volume.

2. Size batches for complete use within maximum of one hour after mixing.

3. Retemper plaster stiffened from evaporation, but do not use or retemper partially hydrated cement plaster.

4. Do not use frozen, caked, or lumping materials, and remove such materials from job site immediately.

5. Mix factory prepared cement plaster in accordance with manufacturer's written instructions.

6. Use moist, loose, sand in mix proportions.

7. Withhold 10% of mixing water until mixing is almost complete, then add as needed to produce necessary consistency.

B. Mechanical Mixing:

1. Clean mixer of set or hardened materials before loading for new batch.

2. Maintain mixer in continuous operation while adding materials.

3. Conform to mixing sequence, cycle of operations, and time recommended by manufacturer of plaster materials.

C. Hand Mixing:

1. Do not hand mix unless authorized by Architect.

2. Use waterproof mixing boxes and water barrels when mixing in building.

D. Mix and proportion stucco as follows:

1. Base coats:
   a. First (scratch) Coat: 1 part cement to 4 parts sand by volume.
   b. Second (brown) Coat: 1 part cement to 5 parts sand by volume.
   c. One part portland cement and 0 to 1/12 parts lime or one part plastic cement for first and second coats.
   d. Polypropylene fiber: Maximum 1 lb. per 1000 lbs. of dry stucco or mortar

mix. Provide in first and second coats only.

2. Finish Coat:
   a. One part portland cement and not more than one part dry hydrated lime.
   b. Not more than 2 1/2 parts sand per sum of cementitious material.
   c. Provide integral color cement finish.
   d. Finish Texture: Smooth.

2.04 PLASTERING ACCESSORIES

A. Casing Beads: Square Edge, Fry Reglet Corporation #JPM-75, or approved equal.

B. Soffit Drip Screeds: Fry Reglet Corporation #DS875, or approved equal.

C. Corner Beads: Small nose, United States Gypsum #1-A, or approved equal.

D. Reveals: Flannery, Inc. 2” reveal with built-in weep; ¼” channel screed with alignment splices, J mold with alignment splices.

PART 3 - EXECUTION

3.01 LATHING

A. Paper Backed Stucco Netting:

1. General Installation Requirements:
   a. Install lath in accordance with ANSI Standard 42.2 unless indicated otherwise herein.
   b. Install true to lines and levels and to provide surface flatness with maximum variation of 1/8" in 10' in any direction.

2. Screw or staple to wood supports at 6" o.c. vertically and 6” o.c. horizontally. Engage the back wires securely at the crimps with the fasteners.

3. Lap lath one mesh and lace with tie wire. Stagger vertical laps. Lap paper weatherboard style.

4. Openings: Cut wire and paper to fit snug to the opening, take care to cut paper from behind any vents.

5. Provide 1/4" continuous clearance between lath and building paper.

B. Expanded Metal Lath:

1. Apply metal lath taut, with long dimension perpendicular to supports. Place projections of lath against supports.

2. Lap ends minimum 1 inch. Adequately secure end laps with tie wire where they occur between supports.

3. Lap sides of diamond mesh lath minimum 1-1/2 inches. Nest outside ribs of rib lath

together.

4. Attach metal lath to wood supports using nails at maximum 6 inches on center.

5. Continuously reinforce all internal angles with cornerite, except where the metal lath forms the angle reinforcement. Fasten cornerite at extreme edges only.

6. Place 4 inch wide x 12 inch long strips of metal lath diagonally at corners of all openings. Secure rigidly in place.

C. Install lath in conformance with California Building Code (CBC).

3.02 MISCELLANEOUS PLASTER ACCESSORIES

A. Install miscellaneous vent screens, control joints, casing beads, drip screeds, corner beads weep screeds and reveals true to lines and levels and to surface requirements to maintain smooth level of finish coats. Cut any paper backing from behind vent screeds to maintain required air flows. Install control joints at maximum 10'-0" spacing on walls and soffits if not shown otherwise on drawings.

B. Architect to review layout of all control joints prior to application of first coat of stucco.

C. Miter all corners on vent screens and control joints.

D. Align wall and soffit expansion joints.

3.03 STUCCO APPLICATION

A. Apply stucco using three coat system.

B. First Coat:

1. Apply to minimum thickness of 3/8", completely embedding the lath.

2. Scratch to provide mechanical key.

3. Moist cure for a minimum of 7 days before applying second coat.

C. Second Coat:

1. Dampen first coat immediately before applying second coat.

2. Apply to minimum thickness of 3/8".

3. Bring to true, even plane by rodding and floating. Maintain surface flatness, with maximum variation of 1/8" in 10'.

4. Moist cure for a minimum of 48 hours and allow to dry for at least 7 days.

D. Finish Coat:

1. Provide integral color finish from custom color selected by Architect.

2. Dampen second coat evenly before applying finish coat.

3. Apply to minimum thickness of 1/8".

4. Moist cure for a minimum of 48 hours.

5. Texture shall be a medium dash.

6. Provide smooth finish in locations to accommodate mounting of identification devices.

3.04 ADJUST AND CLEAN

A. Patching:

1. Upon completion point-up plaster around trim and other locations where plaster meets dissimilar materials.

2. Cut out and patch defective, damaged, discolored or mottled plaster.

3. Stucco containing cracks and blisters shall be removed and replaced.

4. Match patch of defective or damaged plaster to existing work in form and texture.

B. Cleaning:

1. Remove plaster and protective materials from expansion beads, perimeter beads, and adjacent surfaces.

2. Remove stains from plaster surfaces that would adversely affect finish painting.

3.05 CLEANING AND PROTECTION

A. General: In addition to all other protection, protect all adjacent finished surfaces from the accidental application of plaster.

B. Cleaning Up: Upon completion of the work of this Section promptly inspect all adjacent surfaces and remove all traces of spilled and splashed plaster.

END OF SECTION

SECTION 09 30 13

CERAMIC TILING

PART 1 - GENERAL

SUMMARY

PROVISION OF DIVISION 01 APPLIES TO THIS SECTION.

A. Section Includes:

1. Ceramic and porcelain tile.
2. Waterproof membrane for tile.
3. Stone thresholds related to tile.
4. Mortar setting beds for floor and wall tile.

B. Related Sections:

1. Section 03 30 00: Cast-In-Place Concrete.
2. Section 07 90 05: Joint Sealants.
3. Section 09 21 16: Gypsum Board Assemblies
4. Division 22: Plumbing

1.02 SUBMITTALS

A. Product Data: Manufacturer's data, standard specifications, Material Safety Data Sheets, and other technical information for each product specified.

B. Material Samples: Manufacturer’s standard palette, indicating full range of tile colors, textures, and grout colors.

C. Mock-Ups: For each type, color, and texture, minimum 1’ x 1’ or three full tile courses, on plexiglas to demonstrate proper bond mortar and coverage; grout color, hardness and depth.

D. Installation Instructions: Manufacturer's preparation and installation instructions.

E. Product Certificates: Signed by manufacturer certifying that the products furnished comply with requirements of this Specification.

F. Reference Methods: Copies of TCA and ANSI Methods.

1.03 QUALITY ASSURANCE

A. Comply with applicable parts of the following codes or standards as a minimum requirement:

1. ANSI A108. American National Standard Specifications for the Installation of Ceramic Tile.
2. ANSI A118. American National Standard Specifications for Ceramic Tile Installation Materials.
3. ANSI A137.1, Standard Specifications for Ceramic Tile.
4. ASTM A 185 - Steel Welded Wire Fabric, Plain, for Concrete Reinforcement.
5. ASTM C 150 - Portland Cement.

6. ASTM C-144 – Sand.
7. ASTM C 206 - Finishing Hydrated Lime.
8. ASTM C-206 or C 207 - Hydrated Lime for Masonry Purposes.
9. ASTM C 645 - Nonstructural Steel Framing Members.
10. ASTM C 1028 - Determining the Static Coefficient of Friction of Ceramic Tile and other like surfaces by the Horizontal Dynamometer Pull-Meter Method.
11. ASTM D 4551 - Poly Vinyl Chloride (PVC) Plastic Flexible Concealed Water-Containment Membrane.
12. Tile Council of America (TCA) – Handbook for Ceramic Tile installation.

B. Grade Certificate and Labeling: With each delivery of tile, furnish manufacturer's "Master Grade Certificate" to the Project Inspector.

C. Laboratory Testing: Tile shall be tested for compliance with ASTM C 1028 by an approved testing laboratory.

D. Source of Materials: Provide materials obtained from one source for each type and color of tile, grout, and setting materials.

E. Comply with all requirements of 2010 California Building Code and ADA.

F. Qualifications of Tile Manufacturer: Company specializing in ceramic tile, mosaics, pavers, trim units, and thresholds with five years minimum experience. Obtain tile from a single source with resources to provide products of consistent quality in appearance and physical properties.

G. Qualification of Installation System Manufacturer: Company specializing in installation systems/ mortars, grouts/ adhesives with ten years minimum experience. Obtain products from single source manufacturer to insure consistent quality and compatibility.

H. Qualifications of Installer: Company specializing in installation of ceramic tile, mosaics, pavers, trim units and thresholds with five years experience with installations of similar scope, materials, and design.

I. Pre-Construction Meetings:

1. Prior to start of the Work of this section and after approval of submittals, schedule an on-site meeting with the Contractor, OAR, Architect, IOR, and representatives of the material manufacturer and tile installer to review construction conditions and Drawings for conformance with the requirements of this Specification for each substrate.
2. Prior to laying tile and after surfaces to receive tile are installed (mortar beds, backing boards, joint separators) and after testing of waterproof membrane, schedule an on-site meeting with the Contractor, OAR, Architect, IOR and representatives of the material manufacturer and tile installer to review tile, tile installation materials, and finishing equipment for conformance with the requirements of this Specification.

1.04 DELIVERY, STORAGE AND HANDLING

A. Deliver tile in sealed containers, with manufacturer's labels intact.

B. Deliver other products in manufacturer's unopened containers.

C. Keep all materials clean and dry.

1.05 MAINTENANCE

A. Extra Materials: Provide a minimum of 5 percent of each type and color of tile and accessory shapes, from the same run or lot as the installed tile, in manufacturers' cartons and labeled.

1.06 WARRANTY

A. Manufacturer shall provide a 5 year material warranty from the date of final acceptance of the facility.

B. Installer shall provide a 5 year labor warranty from the date of final acceptance.

C. For waterproofing, manufacturer shall provide a 10 year material warranty for waterproofing installation, tile setting, and grouting materials.

PART 2 - PRODUCTS

2.01 GENERAL

A. Tile: To establish quality, the Specification is based on ANSI A.137.1 Standard Grade. Equivalent tile products from the following manufacturers may be provided:

1. Daltile Ceramic and Porcelain Floor Tile and Ceramic Wall Tile
2. American Olean Ceramic and Porcelain Floor Tile and Ceramic Wall Tile.
3. Mohawk Ceramic and Porcelain Floor Tile and Ceramic Wall Tile.
4. Or approved equal.

B. Installation Materials: To establish quality, the Specification is based on setting and waterproofing materials and methods by Laticrete International, Inc. Bethany, CT. Telephone: (800) 243-4788. Website: www.laticrete.com. Equivalent products and methods of the following manufacturers may be provided:

1. Custom Building Products, Seal Beach, CA. Telephone: (562) 598-8808; (800) 272-8786. Telefax: (800) 200-7765. Website: www.custombuildingproducts.com.
2. Mapei, Deerfield Beach, FL. Telephone: (800) 42-MAPEI. Local Distributor (Anaheim, CA): (714) 385-0155. Telefax: (714) 978-0614. Website: www.mapei.com.

C. Colors, Textures, and Patterns: Tile from manufacturer's standard product line, 90% from price group 2, 10% from price group 3, except as indicated otherwise. Tile trim and accessories shall match adjoining tile. Grout color shall match tile unless otherwise indicated.

D. Tile sizes: Tile sizes specified are modular dimensions unless otherwise indicated.

2.02 TILE

A. Through-body Porcelain Floor Tile:

1. Size: As shown in Section 09 00 00, Colors and Materials.
2. Colors and patterns by Architect from price groups specified.
3. Slip Resistance: Resistant to slipping appropriate to the installed conditions of use, as required by the California Building Code and ADA.

a. As a minimum, the coefficient of friction as measured by ASTM C 1028 shall be 0.6.

B. Glazed Ceramic Wall Tile

C. 1. Size: As shown on the drawings

D. 2. Colors and patterns by Architect from price groups specified

E. 3. Slip Resistance for floor tile: Resistant to slippage appropriate to the installed conditions of use, as required by the CBC and the ADA.

F. a. As a minimum, the coefficient of friction as measured by ASTM C 1028 shall be 0.6.

G. Trim:

1. Integral bullnose at external corners.
2. Provide bullnose where tile projects from jamb.
3. Tile coved base with wall tile above: Mfr's product.
4. Tile coved base without wall tile above: Mfr's product (6-inch high sanitary coved base).
5. Cap at wainscot: Mfr's product.

H. Stone Thresholds:

1. ASTM C 503 for exterior installation. Marble thresholds with minimum abrasive hardness value of 10 per ASTM C 241.
2. White honed marble complying with Marble Institute of America Group "A," unless other color indicated.
3. Size and profile shaped to provide transition between tile surfaces and adjoining finished floor surfaces, or as indicated. Width not less than 4." Edges beveled on a slope of no greater than 1:2. Cut to fit door frame profile.

2.03 INSTALLATION MATERIALS

A. Mortar Sand: ASTM C 144.

B. Portland Cement: ASTM C 150, Type I or II.

C. Hydrated Lime: ASTM C 207, Type S; or ASTM C 206.

D. Portland Cement Mortar: ANSI 108.1B

E. Latex Portland Cement Mortar: Sand-cement mortar mix gauged with Laticrete 38 Acrylic Admix or Custom Building Products Acrylic Mortar Admix.

F. Latex Portland Cement Bond Mortar over Waterproof Membrane: Laticrete 317 Floor & Wall Thinset gauged with Laticrete 3701 Admix.

G. Waterproof Membrane: Thin, cold-applied, single component liquid with embedded reinforcing fabric equal in performance characteristics to Laticrete 9235 Waterproof Membrane.

H. Reinforcing Wire Fabric: 2-inch x 2-inch, 16 x 16 gage, galvanized electrically welded wire mesh, ASTM A 185.

I. Latex Portland Cement Grout: Laticrete Sanded Grout (1500 Series) or Unsanded Grout (1600 Series, for joints smaller than 1/8”).

J. Cleavage Membrane and Wall Backing Paper: ASTM D 226, Type I (No. 15) 15-pound asphalt-saturated felt.

K. Separation Material (for all caulked joints including perimeters): Quality Foam, QF 200 white, 3/8” wide x 5” high.

L. Backer Rod for sealants (for ceramic mosaic fields): Polyethylene foam, closed-cell, flexible and compressible, 3/16” diameter.

M. Cleaner and Sealer:

1. Cleaner and sealer shall be from one manufacturer, acceptable to tile and grout manufacturers. To establish quality, the Specification is based on DuPont StoneTech® Professional Stone and Tile Care Products, as appropriate for the application. Equivalent products from Aqua Mix, Miracle Sealants Co. or Watco Tile and Brick shall be considered suitable equal products.
2. Cleaner (cement-based or epoxy-based grout): For standard cleaning DuPont StoneTech Professional Klenz-All Cleaner. For heavy-duty and stubborn stain cleaning, in addition to Klenz-All Cleaner treatment, DuPont StoneTech Professional Oil Stain Remover. For removal of efflorescence, grout haze, salts, mineral deposits and calcium-based stains DuPont StoneTech Professional Restore Acidic Cleaner.
3. Sealer (cement-based grout): DuPont StoneTech Professional Heavy-Duty Grout Sealer or Advanced Grout Sealer.
4.

PART 3 - EXECUTION

3.01 EXAMINATION AND PREPARATION

A. Examine substrates, areas, and conditions where tile will be installed for compliance with requirements for installation tolerances and other conditions affecting performance of installed tile. Verify that all vents, drains, piping, and other projections through substrate have been installed. Proceed with Work only after all conditions are in compliance.

B. Verify that substrates for setting tile are firm; dry; clean and within flatness tolerances required by relevant ANSI A108 tile installation standards. Prepare surfaces as follows:

1. Concrete Floors: Allow concrete floors to cure for 28 days minimum before beginning tile and grout installation. Remove laitance, sand, dust, and loose particles with air blast. If coatings remain, including curing compounds and other substances that contain soap, wax, oil, or silicone and are incompatible with tile-setting materials, remove them by using a terrazzo or concrete grinder, a drum sander, a polishing machine equipped with a heavy-duty wire brush, or a shot-blast system.

C. Substrates to receive wall tile and base shall be:

1. Scratch coat of cement plaster, as specified in Section 09 24 23: Portland Cement Stucco. Ribbed metal lath is not acceptable
2. Cementitious backing panels, as specified in Section 09 21 16: Gypsum Board.
3. Tile Backer Board panels, as specified in Section 09 21 16: Gypsum Board.

D. Verify that installation of grounds, anchors, recessed frames, electrical and mechanical items of Work, and similar items located in or behind tile have been completed before installing tile.

E. Verify that joints and cracks in tile substrates are coordinated with tile caulked- joint locations; if not coordinated, adjust as required by the Architect.

F. Do not install tile until construction in spaces is completed and ambient temperature and humidity conditions are being maintained to comply with referenced standards and manufacturer's written instructions.

G. Protect adjacent surfaces during progress of the Work of this section.

3.02 TILE INSTALLATION, GENERAL

A. Install tile in grid pattern, unless otherwise indicated. Align joints when adjoining tiles on floor, base, walls, and trim are the same size. Lay out Work and center tile fields in both directions in each space or on each wall area. Adjust to minimize tile cutting. Provide uniform joint widths, unless otherwise indicated.

B. For tile mounted in sheets, install joints between tile sheets the same width as joints within tile sheets so joints between sheets are not apparent in finished Work.

C. Extend Work into recesses and under or behind equipment and fixtures to form a complete covering without interruptions, unless otherwise indicated. Terminate Work neatly at obstructions, edges, and corners without disrupting pattern or joint alignments.

D. Accurately form intersections and returns. Perform cutting and drilling of tile without marring visible surfaces. Carefully grind cut edges of tile abutting trim, finish, or built-in items for straight aligned joints. Fit tile closely to electrical outlets, piping, fixtures, and other penetrations so plates, collars, or covers overlap tile.

E. Locate expansion, control, contraction or isolation joints and other sealant-filled joints, directly above joints in concrete substrates, at horizontal and vertical changes in plane, or where indicated during installation of mortar beds. In quarry tile floors, provide at 12 feet on center maximum. Use foam to provide 3/8-inch width. Do not saw-cut joints after installing tiles.

F. Prepare and clean joints to be caulked, and apply sealants to comply with requirements of Division 7 Section "Joint Sealants."

G. Conform to manufacturers printed instructions, and applicable requirements of ANSI and TCA Standards.

3.03 TILE INSTALLATION, FLOOR (TCA Method F1121-07)

A. Install reinforcing and latex Portland-cement mortar setting bed over cured concrete slab. Lap reinforcing at least one full mesh, and support or lift so that it is approximately in the middle of mortar bed. Do not abut against vertical surfaces. Install foam separation material at perimeters and expansion joint locations for caulked joints.

B. Mix setting mortar in accordance with ANSI A.108.1a.2.2..

C. Once begun, mortar installation must continue until room is completely filled. Discard any batch not floated and finished within ½ hour of mixing. Firmly compact before screeding. Screed to true plane and pitch as indicated. Slope mortar bed sufficiently that water flows to drain and no puddling will occur. Slope mortar down to floor drains for proper installation of waterproof membrane. After screeding, firmly rub down with steel or wood float.

D. Cure mortar bed with a light fog spray of water and cover with 6-mil Visqueen for 72 hours.

E. Waterproof Membrane:

1. Install waterproof membrane where required per TCA Standard F121-07. Extend membrane up wall mortar or backing board as follows:
   a. 6 inches minimum, or 3 inches above top of curb wall.
   b. 12 inches minimum at shower locations (hot-mopped asphalt)
2. Insure that all layers of membrane are fully inserted into clamping ring of floor drain. After membrane installation and before tile setting, install pea gravel around sub drain to prevent blockage of weep holes and place mortar to proper level for setting tile.
3. Before setting tile and after seven (7) days curing, water test the membrane by damming drains and doors, filling floor with water to 4-inch minimum depth, and leaving for 24 hours. Correct any leaks and re-test before proceeding. After testing, protect membrane from traffic until tile Work begins.

F. Install tile over properly cured setting bed or waterproof membrane utilizing "thin-set" method with latex Portland cement bond mortar, in accordance with manufacturer's printed instructions and ANSI A108.5. Confirm substrate is completely clean and free of dust. Cut foam at floor perimeters flush with top of mortar bed. Insure that bond coats do not intrude into joints to be caulked.

G. Minimum coverage of bond mortar shall be 80%. Place tile into fresh mortar and move and press or beat in tile to insure full contact. Before setting proceeds, set and remove three tiles or sheets of tiles to confirm specified coverage of bond mortar. If coverage is insufficient, utilize a larger toothed trowel or back butter tiles until proper coverage is provided.

H. Install tile on floors with the following joint widths:

1. Ceramic Mosaic Tile: 1/16 to 1/8 inch.

3.04 TILE INSTALLATION, WALLS (TCA Method W241-07)

A. Install wall mortar beds before floor mortar beds.

B. On plaster walls, clean scratch coat surface of loose or foreign materials, fog spray with water, and install brown coat mortar bed over scratch coat to a thickness not less than 3/8” and not greater than 3/4 inch. Once started, wall mortar installation must continue until wall is completely floated. Discard any batch not floated and finished within ½ hour of mixing. As soon as wall mortar is dried to sufficient hardness but still in a plastic condition, firmly rub down with wood float and scribe all plane interfaces the full depth.

C. Cover cure with 40 wt. Kraft paper for 72 hours minimum.

D. Install tile over properly cured setting bed, waterproof membrane, or cementitious backing panels utilizing "thin-set" method with latex Portland cement bond mortar, in accordance with

manufacturer's printed instructions and ANSI A108.5. Confirm substrate is completely clean and free of dust. Insure that bond coats do not intrude into joints to be caulked.

E. Minimum coverage of bond mortar shall be 80%.

F. Lay out the Work so tiles will be centered on each wall or section of wall in order to minimize tile cuts. Lay out tile wainscots to next full tile beyond dimensions indicated. Spot setting bed with mortared tile, set plumb and true, to accurately indicate plane of finished tile surfaces.

G. Install tile on walls with following joint widths:

1. Glazed Wall Tile: 1/16 inch.
2. Ceramic Mosaic Tile: 1/16 to 1/8 inch.

H. Horizontal joints shall be level, vertical joints plumb with surfaces true and plumb, edges of tiles flushed.

I. Rub exposed cuts smooth with a fine stone; no cut edge shall be set against a fixture or adjoining surface without a 1/16 inch joint to be caulked.

J. Install access doors where required, furnished under another section, in correct location, plumb or level, flush with adjacent construction, and securely fastened to framing.

3.05 GROUTING

A. Prior to starting, ensure that all wall and floor tile surfaces are clean and any excessive bond mortar is scraped and vacuumed from joints (approximately 2/3 depth of tile should be open for grouting). Follow manufacturer’s instructions for mixing grout. Once grout Work commences, proceed until complete wall or floor area is finished utilizing one batch of grout.

B. Latex Portland cement grouting: Dampen tile surface and joints with water using sponge, but leaving no puddles in joints. Force grout into joints using sufficient pressure on rubber float so as to fill joints completely, and scrape excess grout off tile surface with rubber float. Smooth or tool grout to uniform joint finish. Do not over water.

C. Curing latex Portland cement grout: Remove final grout haze with clean soft cloth, and cover with 40-weight Kraft paper to cure. Leave paper in place for protection. Cover wall surfaces with 40-weight Kraft paper for 72 hours.

3.06 CLEANING AND SEALING

A. If grout scum is not visible on tile surface after curing, clean tile surface with clear water. Remove and replace cracked, broken or defective Work with proper material.

B. If, when curing membrane is removed, grout scum is visible on tile surface, follow this cleaning method:

1. Immediately recover floor with paper or felt and allow to continue curing for a minimum of 14 days; uncover floor and maintain entire tile surface saturated with clean cool water for not less than 2 hours.
2. Utilize a neutral cleaner acceptable to manufacturers of tile and grout, and follow manufacturer’s instruction. Do not provide generic acid cleaners.

3. Wet tile floors and apply cleaning solution to floor surface, then scrub with a brush. Rinse area several times with clean water to flush solution off floor surface.

C. Apply penetrating sealer in accordance with manufacturer's instructions utilizing a dense sponge applicator, paint pad, sprayer or brush. Avoid overlapping, puddling, and rundown. Completely wipe surface dry within 3 to 5 minutes using cotton or paper towels; do not allow sealer to dry on tile. After 2 hours, test surface by applying water droplets to surface. If water is absorbed, apply a second coat. Avoid surface traffic for 24 hours.

3.07 CAULKING

A. Insure joints to be caulked are free and clear of all setting and grouting materials and construction debris. Do not permit any foot traffic on installed caulking for a minimum of 48 hours or protect with hardboard strips.

B. Install in accordance with Section 07 90 05: Joint Sealants.

3.08 PROTECTION

A. Admit no traffic where tile is installed until mortar and grout has set for a minimum of 72 hours.

B. Protect the Work of this section until Substantial Completion.

3.09 CLEAN UP

A. Remove rubbish, debris, and waste material and legally dispose of off the Project site.

END OF SECTION

SECTION 09 51 00

ACOUSTICAL CEILINGS AND SUSPENSION SYSTEM

PART 1 GENERAL

1.01 SECTION INCLUDES

A. Suspended metal grid ceiling system.

B. Acoustical units.

1.02 RELATED REQUIREMENTS

A. Section 07 21 00 - Thermal Insulation: Acoustical insulation.

B. Section 07 90 05 - Joint Sealers: Acoustical sealant.

C. Section 09 21 16 0- Gypsum Board Assemblies: Suspended gypsum board ceilings.

D. Section 21 13 13 – Wet-Pipe Sprinkler Systems: Sprinkler heads in ceiling system.

E. Section 23 37 00 - Air Outlets and Inlets: Air diffusion devices in ceiling

1.03 REFERENCE STANDARDS

A. ASTM C 635 - Standard Specification for the Manufacture, Performance, and Testing of Metal Suspension Systems for Acoustical Tile and Lay-in Panel Ceilings; 2004.

B. ASTM C 636/C 636M - Standard Practice for Installation of Metal Ceiling Suspension Systems for Acoustical Tile and Lay-in Panels; 2006.

C. ASTM E 580/E 580M - Standard Practice for Application of Ceiling Suspension Systems for Acoustical Tile and Lay-in Panels in Areas Requiring Seismic Restraint; 2006.

D. ASTM E 1264 - Standard Classification for Acoustical Ceiling Products; 1998 (Reapproved 2005).

E. LEED NC version 2.2 - Low-Emitting Materials Product List; Green Seal Standard 36; www.greenseal.org

F. UL (FRD) - Fire Resistance Directory; Underwriters Laboratories Inc.; current edition.

1.04 ADMINISTRATIVE REQUIREMENTS

A. Sequence work to ensure acoustical ceilings are not installed until building is enclosed, sufficient heat is provided, dust generating activities have terminated, and overhead work is completed, tested, and approved.

B. Do not install acoustical units until after interior wet work is dry.

1.05 SUBMITTALS

A. Shop Drawings: Indicate grid layout and related dimensioning.

B. Samples: Submit two full size samples illustrating material and finish of acoustical units.

C. Maintenance Materials: Furnish the following for the City's use in maintenance of project.
   1. Extra Acoustical Units: Quantity equal to 5 percent of total installed.

D. LEED Submittal: Documentation of recycled content and location of manufacture.

1.06 QUALITY ASSURANCE

A. Suspension System Manufacturer Qualifications: Company specializing in manufacturing the products specified in this section with minimum ten years documented experience.

1.07 FIELD CONDITIONS

A. Maintain uniform temperature of minimum 60 degrees F, and maximum humidity of 40 percent prior to, during, and after acoustical unit installation.

PART 2 PRODUCTS

2.01 ACOUSTICAL UNITS

A. Manufacturers:
   1. Armstrong World Industries, Inc; www.armstrong.com. Basis of design.
   2. CertainTeed Corporation; www.certainteed.com.
   3. USG; www.usg.com.
   4. Substitutions: See Section 01 60 00 - Product Requirements.

B. Acoustical Units - General: ASTM E 1264, Class A.

C. Acoustical Tile Type: Fiberglass, ASTM E 1264 Type III, with to the following characteristics:
   1. VOC Content: Certified as Low Emission by one of the following :
      a. Low-Emitting Materials per Green Seal Standard 36; www.greenseal.org/certification/standard
      b. ASHRAE Standard 62.1-2004
   2. Size: As shown on the drawings and in Section 09 0000.
   3. Light Reflectance: 0.90, determined as specified in ASTM E 1477.
   4. NRC Range: 0.95, determined as specified in ASTM C 423.
   5. Ceiling Attenuation Class (CAC):.35 to .39, determined as specified in ASTM E 1111.
   6. Edge: Square tegular.
   7. Surface Color: White.
   8. Surface Texture: Fine.
   9. Antimicrobial Protection: Inherent

2.02 SUSPENSION SYSTEM(S)

A. Manufacturers:
   1. Same as for acoustical units

B. Suspension Systems - General: ASTM C 635; die cut and interlocking components, with stabilizer bars, clips, splices, perimeter moldings, and hold down clips as required.

C. Exposed Steel Suspension System: Formed steel, commercial quality cold rolled; heavy-duty.
   1. Profile: Tee; 15/16 inch wide face.
   2. Construction: Double web.
   3. Finish: White painted.
   4. Compression Strut: ASTM A513, telescoping design as detailed on drawings, galvanized 3/4 inch diameter 14 gauge rigid steel tubing crimped and attached to structure per details.

2.03 ACCESSORIES

A. Support Channels and Hangers: Galvanized steel; size and type to suit application, seismic requirements, and ceiling system flatness requirement specified.

B. Perimeter Moldings: Same material and finish as grid.
   1. At Exposed Grid: Provide L-shaped molding for mounting at same elevation as face of grid.

C. Acoustical Insulation: Specified in Section 07 21 00.

D. Gypsum Board: Fire rated type; 5/8 inch thick, ends and edges square, paper faced.

PART 3 EXECUTION

3.01 EXAMINATION

A. Verify existing conditions before starting work.

B. Verify that layout of hangers will not interfere with other work.

3.02 INSTALLATION - SUSPENSION SYSTEM

A. Install suspension system in accordance with ASTM C 636/C 636M, ASTM E 580/E 580M, and manufacturer's instructions and as supplemented in this section.

B. Rigidly secure system, including integral mechanical and electrical components, for maximum deflection of 1:360.

C. Install after major above-ceiling work is complete. Coordinate the location of hangers with other work.

D. Hang suspension system independent of walls, columns, ducts, pipes and conduit. Where carrying members are spliced, avoid visible displacement of face plane of adjacent members.

E. Where ducts or other equipment prevent the regular spacing of hangers, reinforce the nearest affected hangers and related carrying channels to span the extra distance.

F. Do not support components on main runners or cross runners if weight causes total dead load to exceed deflection capability.

G. Support fixture loads using supplementary hangers located within 6 inches of each corner, or support components independently.

H. Do not eccentrically load system or induce rotation of runners.

I. Perimeter Molding: Install at intersection of ceiling and vertical surfaces and at junctions with other interruptions.
   1. Use longest practical lengths.
   2. Overlap and rivet corners.

J. Install light fixture boxes constructed of gypsum board above light fixtures in accordance with fire rated assembly requirements and light fixture ventilation requirements.

3.03 INSTALLATION - ACOUSTICAL UNITS

A. Install acoustical units in accordance with manufacturer's instructions.

B. Fit acoustical units in place, free from damaged edges or other defects detrimental to appearance and function.

C. Fit border trim neatly against abutting surfaces.

D. Install units after above-ceiling work is complete.

E. Install acoustical units level, in uniform plane, and free from twist, warp, and dents.

F. Cutting Acoustical Units:
   1. Make field cut edges of same profile as factory edges.

G. Where round obstructions occur, provide preformed closures to match perimeter molding.

H. Install hold-down clips on panels within 20 ft of an exterior door.

3.04 TOLERANCES

A. Maximum Variation from Flat and Level Surface: 1/8 inch in 10 feet.

B. Maximum Variation from Plumb of Grid Members Caused by Eccentric Loads: 2 degrees.

END OF SECTION

WOOD STAGE FLOOR SYSTEM

PART-1 GENERAL

1.01 Description

A. Wood stage flooring will occur in the Fox Stage Resilient Floor Extents and orchestra-pit lift as indicated in the Drawings.

1.02 Quality Standards:

A. PLYWOOD PRODUCT STANDARDS: Comply with PS 1 (ANSI A 199.1) or, for products not manufactured under PS 1 provisions, with applicable APA Performance Standard for type of panel indicated.

B. INSPECT: Sub strata concrete. Surface must be level to within 1/8" in a 10' radius, smooth troweled to the approval of the flooring installation contractor.

C. Stage Resilient Floor Extents finished elevation tolerance is 1/8" maximum around edges and along common surfaces adjoining the orchestra-pit lift.

1.03 Product Handling:

Delivery and storage: Keep materials dry at all times. Protect against exposure to weather and contact with damp or wet surfaces. Stack hardboard and plywood, and provide for air circulation within stacks.

1.04 Submittal:

Samples: Submit 12" square samples of tempered hardboard and 4" x 4" sample of ½" ribbed neoprene pad.

PART-2 PRODUCTS

2.01 Materials:

A. Plywood: Fir, U.S. product standard PSI-74, 15/32" x 4' x 8' APA-rated sheathing plywood, exposure 1 or 7/16" O.S.B.

B. Tempered Hardboard (Stage Floor Surface)

1. Type: Comply with ANSI/AHA A135.4 requirements modified for double tempered type surface SIS, (smooth side on top), back side sanded to produce boards with uniform thickness of ¼" +/- 0.005" in panel sizes of 4'-0" x 4'-0" minimum to 4'-0" x 8'-0" maximum..

2. Available Products: Subject to compliance with requirements, products which may be incorporated in the work include, but are not limited to, the following:

a. Masonite Brand Underlayment, Masonite Corp.
b. 0.215" Hardboard Underlayment, Georgia Pacific.

C. Moisture Content: At time of delivery, limit average moisture content of plywood and hardboard to 12% with 14% maximum for any piece.

D. Shock Absorption Pads: 3/8" thick ribbed neoprene similar to that used with "Horner Sports Floors," "Superior Floor Company," "Super-Shock System" or Action Cush PVC pads by "Action Floor Systems."

2.02 Nails and nailing:

A. Tempered Hardboard Installation: Fasten tempered hardboard with screws (slightly countersunk) at 12" o.c. at perimeter and 24" o.c. at interior.

PART-3 INSTALLATION

3.01 Subflooring:

A. Plywood Subfloor Installation: Fasten subflooring to scenery lift steel structure with screws (slightly countersunk) at 12" o.c. at perimeter and 24" o.c. at interior. At resilient floor over concrete slab, fasten plywood direct to 2x4 sleepers using perimeter screws as above plus the use of steel rawl drive pins installed at the intersect of interlocking notched sleepers which occurs over the pads.

3.02 Surface:

A. Installation: Comply with instructions and recommendations of flooring associateion. Comply with pattern or direction of pattern for laying flooring sheets as shown or, if not shown, as directed by Architect. Allow spacing betweeen sheets of tempered hardboard equal to thickness of a coin, using a standard quarter currency.

3.03 Fasteners:

A. Hardboard to Plywood: Use screws at perimeter panel edges 12" o.c., interior 24" o.c.

B. Absorption Pads to Plywood: Minimum 50 gauge staples having a ½" crown and ¾" legs. Place pads 8" o.c. each way under plywood subfloor.

3.04 Protection:

A. Institute procedures required for protection of finished wood flooring during remainder of construction period, so that natural-uncoated hardboard surface finish will be without damage or deterioration at time of acceptance.

END OF SECTION

SECTION 09 90 00

PAINTING

PART 1 - GENERAL

1.01 SUMMARY

A. This section includes the following:
1. Surface preparation.
2. Prime coat application.
3. Finish coat application.
4. Upon completion of Work under this Contract, all surfaces within the Contract limits and within vision, shall have a painted finish on the interior and exterior except excluded items defined herein. Include all roof mounted mechanical and electrical equipment factory primed or factory finished and in full view.

1.02 WORK NOT INCLUDED

A. Surfaces Not To Be Painted:
1. Prefinished wall, ceiling and floor coverings.
2. Items with factory-applied final finish except roof-mounted equipment as defined above.
3. Concealed ducts, pipes and conduit.
4. Glass, plastic laminate, ceramic tile, anodized aluminum.
5. Steel items embedded in concrete.
6. Surfaces specifically scheduled or noted on the Drawings not be painted.
7. Fire-Rated Labels on doors or frames.

1.03 REFERENCES

A. AQMD – Air Quality Management District, Local Regulations.

B. ASTM D4442 – Direct Moisture Content Measurement of Wood and Wood-Base Materials.

C. ASTM D4444 – Use and Calibration of Hand-Held Moisture Meters.

D. CIWMB – California Integrated Waste Management Board

E. EPA – Environmental Protection Agency

F. GS – Green Seal™ Standards and Certification. GS – 11: Green Seal™ Environmental Standard for Paints and Coatings, 2nd Edition. May 12, 2008.

G. IAQ – California Indoor Air Quality Program.

H. LEED – Leadership in Energy and Environmental Design (Green Building Rating System).

I. MPI – Master Painters Institute.

J. OSHA – Occupational Safety and Health Administration

K. USGBC – United States Green Building Council

1.04 SUBMITTALS

A. Provide product data on all finishing products.

B. Three samples 8-1/2 by 11 inches in size illustrating range of colors and textures available for each surface-finishing product scheduled for selection.

C. Prepare wood samples on type and quality of wood specified.

D. Manufacturer's application instructions.

1.05 QUALITY ASSURANCE

A. Product Manufacturer: Company specializing in manufacturing quality paints and finish products with ten years experience.

B. Applicator: Company specializing in commercial painting and finishing with five years experience.

C. Regulatory Requirements
1. Conform to AQMD and local regulations for maximum VOC limits.
2. Comply with applicable codes and regulations of governmental agencies having jurisdiction including those having jurisdiction over airborne emissions and industrial waste disposal. Where those requirements conflict with this Specification, comply with the more stringent provisions.

D. Field Samples
1. Provide field sample panel, illustrating coating color, texture and finish for each color scheduled.
2. Locate as approved by Architect.
3. Approved sample may remain as part of Work.
4. Do not proceed with coating application until sample panel has been approved.

E. All opaque top coat interior paints shall conform to the maximum VOC content limits set by Green Seal™ Standard GS-11.

1.06 DELIVERY, STORAGE AND HANDLING

A. Deliver products to site in sealed and labeled containers.

B. Container labeling to include manufacturer's name, type of paint, brand name, brand code, coverage, surface preparation, drying time, cleanup, color designation and instructions for mixing and reducing.

C. Store paint materials at minimum ambient temperature of 45 degrees F and maximum of 90 degrees F, in well ventilated area unless permitted otherwise by manufacturer's instructions.

D. Take precautionary measures to prevent fire hazards and spontaneous combustion.

1.07 ENVIRONMENTAL REQUIREMENTS

A. Provide continuous ventilation and heating facilities to maintain surface and ambient temperatures above 45 degrees F for 24 hours before, during and 48 hours after application of finishes, unless permitted otherwise by manufacturer's instructions.

B. Do not apply exterior coatings during rain, or when relative humidity is above 50 percent, unless permitted otherwise by manufacturer's instructions.

C. Minimum Application Temperatures for Latex Paints: 45 degrees F for interiors; 50 degrees F for exterior; unless required otherwise by manufacturer's instructions.

D. Minimum Application Temperature for Varnish and transparent Finishes: 65 degrees F for interior or exterior, unless permitted otherwise by manufacturer's instructions.

E. Provide lighting level sufficient to conduct painting operations.

1.08 EXTRA STOCK

A. Provide one (1) five-gallon unopened container of each color, type and gloss of paint used in the work.

B. Label each container with color, texture and room locations in addition to the manufacturer's label.

1.09 GUARANTEE

A. Guarantee the painting Work against peeling, fading, cracking, blistering or crazing for a period of three years from the Date of Substantial Completion.

PART 2 - PRODUCTS (Refer also to Section 09 00 00).

2.01 MANUFACTURERS

A. Products of following manufacturers form basis for design and quality intended.
1. Dunn Edwards.
2. ICI Dulux.
3. Sherwin Williams Company Harmony Low Odor.

B. Or equal as approved in accordance with Division 01, General Requirements for Substitutions.

2.02 MATERIALS

A. Coatings: Ready mixed, except field-catalyzed coatings. Process pigments to soft paste consistency, capable of being readily and uniformly dispersed to homogeneous coating.

B. Colors and Glosses: Architect will select color and hue to be used in various types of paint specified and will be sole judge of acceptability of various glosses obtained from materials proposed to be used in Work. During actual painting, Architect may make minor modifications in tone and shade to adjust for actual surface and lighting conditions encountered.

C. Undercoats and Thinners: Provide undercoat paint produced by same manufacturer as finish coat. Use only thinners recommended by paint manufacturer and use only to recommended limits. Use undercoat, finish coat and thinner material as parts of a unified system of paint finish.

D. Coatings: Good flow and brushing properties; capable of drying or curing free of streaks or sags.

E. Accessory Materials: Linseed oil, shellac, turpentine, paint thinners and other materials not specifically indicated but required to achieve the finishes specified of commercial quality.

2.03 APPLICATION EQUIPMENT

A. For application of the approved paint, use only such equipment as is recommended by the manufacturer.

B. Compatibility: Prior to actual use of application equipment, use all means necessary to verify that the proposed equipment is actually compatible with the material to be applied and that the integrity of the finish will not be jeopardized by use of the proposed application equipment.

2.04 FINISHES

A. Refer to schedule at end of Section for surface finish. Notwithstanding product numbers listed in schedule, Contractor shall conform to most recent product numbers as published by the manufacturer.

PART 3 - EXECUTION

3.01 INSPECTION

A. Verify that surfaces are ready to receive Work as instructed by the product manufacturer.

B. Examine surfaces scheduled to be finished prior to commencement of Work. Report any condition that may potentially affect proper application.

C. Measure moisture content of new surfaces using an electronic moisture meter. Do not apply finishes unless moisture content of surfaces are below the following maximums:
1. Plaster and Gypsum Wallboard: 12 percent.
2. Masonry, Concrete and Concrete Unit Masonry: 12 Percent.
3. Interior Located Wood: 15 percent, measured in accordance with ASTM D4442 and ASTM D4444.
4. Exterior Located Wood: 19 percent, measured in accordance with ASTM D4442 and ASTM D4444.

D. Beginning of installation means acceptance of existing surfaces.

3.02 MATERIALS PREPARATION

A. Mix and prepare painting material in accordance with manufacturer's recommendations.

B. Store materials not in actual use in tightly covered containers.

C. Maintain containers used in storage, mixing and application of paint in a clean condition, free from foreign materials and residue.

D. Stir all materials before application to produce a mixture of uniform density and as required during the application of materials. Do not stir into the material any film that may form on the surface. Remove the film and strain the material before using.

3.03 SURFACE PREPARATION

A. Remove electrical plates, hardware, light fixture trim and fittings prior to preparing surfaces for finishing.

B. Correct minor defects and clean surfaces which affect Work of this Section.

C. Shellac and seal marks which may bleed through surface finishes.

D. Impervious Surfaces: Remove mildew by scrubbing with solution of tri-sodium phosphate and bleach. Rinse with clean water and allow surface to dry.

E. Insulated Coverings: Remove dirt, grease and oil from canvas and cotton.

F. Gypsum Board Surfaces: Fill minor defects, joints and nail head depressions with spackling compounds. Prime in accordance with primer manufacturer's recommendations. Apply primer over skim coat for Level 5 finish.

G. Galvanized Surfaces: Remove surface contamination and oils and wash with solvent. Apply coat of etching primer as specified in Schedule for existing painted surfaces, remove existing paint thoroughly to bare metal and paint per Schedules at the end of this Section.

H. Concrete and Unit Masonry Surfaces Scheduled to Receive Paint Finish: Remove dirt, loose mortar, scale, salt or alkali powder and other foreign matter. Remove oil and grease with a solution of tri-sodium phosphate; rinse well and allow to dry. Remove stains caused by weathering or corroding metals with a solution of sodium metasilicate after thoroughly wetting with water. Allow to dry.

I. Plaster Surfaces: Fill hairline cracks, small holes and imperfections with patching plaster. Make smooth and flush with adjacent surfaces. Wash and neutralize high alkali surfaces.

J. Shop Primed Steel Surfaces: Sand and scrape to remove loose primer and rust. Feather edges to make touch-up patches inconspicuous. Clean surfaces with solvent. Spot prime bare steel surfaces to match existing primer.

K. Wood Scheduled to Receive Paint Finish: Remove dust, grit and foreign matter. Seal knots, pitch streaks and sappy sections. Fill nail holes with tinted exterior caulking compound after prime coat has been applied.

L. Wood Doors and Cabinet Work scheduled for field-applied transparent or solid stain finish:
   1. Sand surfaces thoroughly with a 5/0, 180 grit sandpaper.
   2. Apply coatings as specified in the schedule to all surfaces, sides and edges. Avoid streaking or uneven application Use multiple coats to produce a glass-smooth surface film of even luster. Provide a finish free of laps, runs, cloudiness, color irregularity, brush marks, orange peel, nail or screw holes, or other surfaces imperfections.
   3. Stains as selected by Architect from manufacturer’s full range of colors.
   4. Provide satin finish for final coats.

M. Wood Doors Scheduled for Painting: Seal top and bottom edges with primer. Leave labels intact and readable.

N. Exterior Wood-Clear coats: apply exterior grade varnish.

3.04 PROTECTION

A. Protect elements surrounding the Work of this Section from damage or disfiguration.

B. Repair damage to other surfaces caused by Work of this Section.

C. Furnish drop cloths, shields and protective methods to prevent spray or droppings from disfiguring other surfaces.

D. Remove empty paint containers from site.

3.05 APPLICATION

A. Apply products in accordance with manufacturer's instructions.

B. Do not apply finishes to surfaces that are not dry.

C. Apply each coat to uniform finish. Number of coats specified is a minimum. Additional coats shall be applied at no extra cost, if coatings show evidence of uneven application, uneven pigmentation, brush strokes or otherwise unsatisfactory distribution of material. For bidding purposes, all 24 hours minimum duration between all required coats.

D. Under coats shall be lighter and brighter in tint than finish coat.

E. Sand lightly between coats to achieve required finish.

F. Allow applied coat to dry before next coat is applied.

G. Where clear finishes are required, tint fillers to match wood. Work fillers into the grain before set. Wipe excess from surface.

H. Prime back surfaces of interior and exterior woodwork with primer paint.

I. Prime back surfaces of interior woodwork scheduled to receive stain or varnish finish with gloss varnish reduced 25 percent with mineral spirits.

J. Seal Tops, bottoms and cutouts for hardware and accessories of wood doors and plastic-laminate covered doors.

K. Split paint door frames to match color of walls on each side of opening.

L. Interior walls shall receive accent paint colors.

3.06 FINISHING MECHANICAL AND ELECTRICAL EQUIPMENT

A. Refer to Section Divisions 22, 23 and 26 for color coding and identification banding requirements of equipment, ductwork, piping and conduit.

B. Paint shop primed equipment.

C. Remove unfinished louvers, grilles, covers, and access panels on mechanical and electrical components and paint separately.

D. Prime and paint insulated and exposed pipes, conduit, boxes, insulated and exposed ducts, hangers, metal louvers, brackets, collars and supports, except where items are prefinished.

E. Replace identification markings on mechanical or electrical equipment when painted accidentally.

F. Paint interior surfaces of air ducts that are visible through grilles and louvers with one coat of flat black paint, to limit of sight line. Paint dampers exposed behind louvers and grilles to match face panels.

G. Paint exposed conduit and electrical equipment occurring in finished areas.

H. Paint both sides and edges of plywood backboards for electrical and telephone equipment before installing equipment.

I. Color code equipment, piping, conduit and exposed ductwork in accordance with requirements indicated. Color band and identify with flow arrows names and numbering, using stencils or other approved systems.

J. Replace electrical plates, hardware, light fixture trim and fittings removed prior to finishing.

3.07 CLEANING

A. As Work proceeds, promptly remove paint where spilled, splashed, or spattered.

B. During progress of Work maintain premises free of unnecessary accumulation of tools, equipment, surplus materials and debris.

C. Collect cotton waste, cloths, and material that may constitute a fire hazard, place in closed metal containers and remove daily from site.

D. Disposal: Observe all applicable requirements per California Integrated Waste Management Board (CIWMB) and other California governing regulations as pertains to the disposal and recycling of paintings and coatings.

3.08 SCHEDULE

Note: The referenced product standards are listed as the Dunn-Edwards product first and the equal ICI Dulux product second.

Ferrous Metal (Exterior):

First Coat	CORROBAR, White Alkyd Corrosion Inhibitive Primer (43-5)
	DEVFLEX Direct to Metal Primer (4020 PF)
Second Coat	PERMAGLOSS, 100% Acrylic Gloss Enamel (W 960V)
	DULUX Professional 100% Acrylic Finish (2406 Semi-Gloss)
Third Coat	PERMAGLOSS, 100% Acrylic Gloss Enamel (W 960V)
	DULUX Professional 100% Acrylic Finish (2406 Semi-Gloss)

Non-Ferrous Metal (Exterior):

First Coat	ULTRA-GRIP, Premium Multi-Purpose Latex Primer (W 715)
	DEVOE Coatings Truglaze WB Waterborne Epoxy Primer (4030)
Second Coat	EVERSHIELD, 100% Acrylic Exterior Masonry Finish (W 701V)
OR	PERMAGLOSS, 100% Acrylic Gloss Enamel (W 960V)
	DULUX Professional 100% Acrylic Finish (2406 Semi-Gloss)
Third Coat	EVERSHIELD, 100% Acrylic Exterior Masonry Finish (W 701V)
OR	PERMAGLOSS, 100% Acrylic Gloss Enamel (W 960V)
	DULUX Professional 100% Acrylic Finish (2406 Semi-Gloss)

Plaster (Interior) Walls:

First Coat	ECOSHIELD, Low-Odor/Zero-VOC Interior Latex Primer (W 600)
	PREP & PRIME Odorless Interior Water-Based Sealer (9116)
Second Coat – Low Sheen	ECOSHIELD, Low-Odor/Zero-VOC Interior Late Low Sheen Paint (W 602)
	DULUX LifeMaster Interior Enamel (9300 Eggshell)
Third Coat – Low Sheen	ECOSHIELD, Low-Odor/Zero-VOC Interior Late Low Sheen Paint (W 602)
	DULUX LifeMaster Interior Enamel (9300 Eggshell)

Gypsum Board (Interior) Walls:

First Coat	ECOSHIELD, Low-Odor/Zero-VOC Interior Latex Primer (W 600)
	DULUX LifeMaster Interior Enamel (9300 Eggshell)
Second Coat – Low Sheen	ECOSHIELD, Low-Odor/Zero-VOC Interior Late Low Sheen Paint (W 602)
	DULUX LifeMaster Interior Enamel (9300 Eggshell)
Third Coat – Low Sheen	ECOSHIELD, Low-Odor/Zero-VOC Interior Late Low Sheen Paint (W 602)
	DULUX LifeMaster Interior Enamel (9300 Eggshell)

Gypsum Board (Interior) Ceilings:

First Coat	ULTRA-GRIP, Premium Multi-Purpose Latex Primer (W 715)
	PREP & PRIME Odorless Interior Water-Based Sealer (9116)
Second Coat	ECOSHIELD, Low-Odor/Zero-VOC Interior Later Flat Paint(W 601)
OR	WALLTONE, Int. Latex Flat Wall Finish (W 420)
	DULUX LifeMaster Interior Enamel (9100 Flat)
Third Coat	ECOSHIELD, Low-Odor/Zero-VOC Interior Later Flat Paint(W 601)
OR	WALLTONE, Int. Latex Flat Wall Finish (W 420)
	DULUX LifeMaster Interior Enamel (9100 Flat)

Ferrous Metal Interior:

First Coat CORROBAR, White Alkyd Corrosion Inhibitive Primer (43-5)
DEVFLEX Direct to Metal Primer (4020 PF)
Second Coat – Semi-Gloss ECOSHIELD, Low-Odor/Zero-VOC Interior Later Semi-Gloss Paint (W 603)
DULUX LifeMaster Interior Enamel (9200 Semi-Gloss)
Third Coat – Semi-Gloss ECOSHIELD, Low-Odor/Zero-VOC Interior Later Semi-Gloss Paint (W 603)
DULUX LifeMaster Interior Enamel (9200 Semi-Gloss)

Non-Ferrous Metal Interior:

First Coat ULTRA-GRIP, Premium Multi-Purpose Latex Primer (W 715)
DEVOE Coatings Truglaze WB Waterborne Epoxy Primer (4030)
Second Coat – Semi-Gloss ECOSHIELD, Low-Odor/Zero-VOC Interior Later Semi-Gloss Paint (W 603)
DULUX LifeMaster Interior Enamel (9200 Semi-Gloss)
Third Coat – Semi-Gloss ECOSHIELD, Low-Odor/Zero-VOC Interior Later Semi-Gloss Paint (W 603)
DULUX LifeMaster Interior Enamel (9200 Semi-Gloss)

Ferrous Metal Exterior:

First Coat INTERSEAL 670 HS, High Solids Surface Tolerant Epoxy
DEVFLEX Direct to Metal Primer (4020 PF)
Second Coat INTERTHANE 990 HS, High Solids Polyurethane, High Gloss
DULUX LifeMaster Interior Enamel (9200 Semi-Gloss)
Third Coat INTERTHANE 990 HS, High Solids Polyurethane, High Gloss
DULUX LifeMaster Interior Enamel (9200 Semi-Gloss)

END OF SECTION

SECTION 10 21 13

SOLID PHENOLIC TOILET COMPARTMENTS

PART 1 - GENERAL

1.01 SUMMARY

A. Provisions of Division 01 apply to this section.

B. Section Includes:

1. Solid phenolic toilet compartments and urinal screens as indicated.

C. Related Sections:

1. Division 01: LEED Certification Procedures and related Sections.
2. Section 09 22 16: Non-Structural Metal Framing

1.02 SYSTEM DESCRIPTION

A. Design Requirements: Design and fabrication shall conform to requirements of ADA and 2010 California Building Code (CBC).

B. Toilet Compartments:

1. Ceiling-hung units consisting of solid phenolic pilasters, panels and doors; plated steel leveling devices with stainless steel covers; and stainless steel fittings, hardware and fastenings necessary for complete installation.
2. Door hardware shall be mounted at 30” to 44” above finished floor.

C. Urinal Screens:

1. Wall hung type consisting of solid phenolic screen panels and stainless steel fittings and fastening necessary for complete installation.
2. Floor supported type units consisting of solid phenolic pilasters and screen panels; plated steel leveling devices with stainless steel covers, and stainless steel fittings and fastenings necessary for complete installation.

1.03 SUBMITTALS

A. Shop Drawings: Submit Shop Drawings indicating complete layout, elevations of partitions, thickness of solid phenolic panels, fastenings, proposed method of anchoring, size and spacing of anchors, details of construction, hardware, fittings, mountings, method of assembly, other related items, and installation details.

B. Product Data: Submit manufacturer's technical data for materials, fabrication, finishing, fastenings, hardware, and installation details.

C. Material Samples:

1. Submit full range of Samples of phenolic chips for initial color selection. Chips shall be at least 2 inches x 3 inches.
2. Submit Samples of hardware and fasteners.

D. Certificates: Furnish manufacturer's certification that materials meet or exceed specification requirements. Provide LEED Report outlining recycled content and data on VOC's.

E. Care and Maintenance: Provide manufacturer's standard maintenance and cleaning instructions. Provide one 2-hour maintenance and cleaning instructions with City personnel; coordinate scheduling with the Contractor as required.

1.04 QUALITY ASSURANCE

A. Comply with the following as a minimum requirement:

1. ASTM A167-92b: Stainless and Heat Resisting Chromium Nickel Steel Plated
2. ASTM E 84-91a: Surface Burning Characteristics of Building Materials
3. Chemical Resistance: Panels to meet or exceed Scientific Equipment Furniture Association's (S.E.F.A.) list of 49 standard chemicals.
4. Consistency:
   a. Panels to have uniform thickness (+0.03").
   b. Panels to have uniform flatness (maximum difference of 0.03") for 10' span.
5. Recycle content: 20 % of material shall be required.

1.05 DELIVERY, STORAGE AND HANDLING

A. Deliver materials to Project site with manufacturer's labels intact and legible, in sealed containers. Materials shall be kept dry.

B. Provide all means necessary to protect compartments and screens.

1.06 COORDINATION

A. Field Measurements: Secure field measurements before preparation of Shop Drawings and fabrication where possible, for proper and adequate fabrication and installation of the Work of this section.

B. Furnish inserts and anchorage built into other construction for installation of toilet compartments and urinal screens.

1.07 WARRANTY

A. Manufacturer shall provide a 10 year material warranty.

PART 2 - PRODUCTS

2.01 MANUFACTURERS

A. Solid Phenolic Panels:

1. ½” thick solid phenolic core partitions with high pressure laminate finish.
2. Or approved equal.
3. Color as selected by Architect.

B. Hardware:

1. Galaxy Hardware, 803-799-2423 Series 8233 - 8433.
2. Capitol Partitions, Inc.,410-740-8870.
3. Or equal.

2.02 MATERIALS

A. Product: Bradley Series 600: Toilet compartment panels, doors and pilasters, urinal screens and visual screens.

1. Composition: 1/2” thick solid phenolic core composed of compressed cellulose fibers impregnated with resins. Surface laminate shall be fused to core.
2. Water Absorption by weight: 0.82%.
3. Density (g/em3): 1.4-1.45%.
4. Internal bond (psi): 1,225 lbs.
5. Hardness Test, Barcole meter (Barber Coleman): 47 avg.
6. UV exposure: Slight darkening for light colors; dark colors are stable.
7. Formaldehyde (less than 1 part per million): No detected residues.
8. Flamespread Index: (20) Class A rating.
9. Smoke Developed Index: (110) Class A rating.

B. Stainless Steel: ASTM A167, Type 304.

C. Concealed Fasteners and Leveling Devices: Zinc or cadmium coated steel.

2.03 CHARACTERISTICS

A. Doors shall be minimum 3/4 inch thick, panels minimum 1/2 inch thick, pilasters minimum 3/4 inch thick and screens minimum 1/2 inch thick. Edges shall be machined to a radius of 0.125 inch; exposed surfaces shall be free of fabrication marks.

2.04 FABRICATION

A. Pilasters and Doors: Flush, formed of 3/4" thick solid phenolic panels.

1. Door Dimensions: Unless otherwise indicated, furnish 24" wide in-swinging doors for standard toilet compartments.

a. Accessible toilet compartments: Door at front entry stalls shall have 32” minimum clear width when the door is open 90 degrees. Door at side entry stalls shall have 34” minimum clear width when the door is open 90 degrees.

2. Anchorage Devices: Provide galvanized steel anchorage devices, complete and threaded rods, washers, and leveling adjustment nuts at pilasters, to permit connection to structural supports in the ceiling. The ceiling edge of pilasters shall be provided with a mechanically-fastened 3/8” steel leveling bar.

3. Overhead Bracing: Provide anti-grip, decorative, heavy duty, extruded aluminum head rail with clear anodized finish.

B. Urinal Screens: Flush, formed of 1/2" thick solid phenolic panels. Height and width as indicated in drawings. Locate all accessories as shown on the drawings and per the requirements of the standards of accessibility in the CBC 2010.

2.05 HARDWARE

A. Door hardware shall be cast Type 304 stainless steel, as follows:

1. Hinges: 11 gauge Cast Stainless Steel Hinge. Hinge shall be cast of type 304 stainless steel and shall have a Satin finish. Hinge shall be gravity type for self-closing action and shall be fully adjustable up to 360 degrees. Pivot pin shall be made of type 304 stainless steel. Only stainless steel components shall be used in the construction of the Hinge. Plastic inserts are unacceptable. Hinges shall provide emergency access by lifting the door. Hinges shall be pre-drilled for mounting to door and plaster with Stainless Steel through-bolts. Stamped stainless steel is not acceptable.

2. Strike and Keeper with Emergency Access: Heavy duty cast stainless steel with a Satin finish. The strike and keeper shall be 2.50” high, with the mounting holes at 1.50” on center, and the wall thickness shall be a minimum of .125”. The strike and keeper shall have an integral rubber bumper door stop. The stock number shall be molded into the back of the strike and keeper for ease in identification. Furnish one per door. Stamped stainless steel is not acceptable.

3. Slide Latch: Heavy Duty Cast Stainless steel with a Satin finish. The slide latch shall be surface mounted and in conformance with the requirements as outlined in CBC 1115B.3.1 (4.5) at all accessible locations. The slide bar shall be .150” thick, 1.020” wide and 3.720” long. Latch shall have an internal stainless steel buffering spring to prevent damage when door is inadvertently slammed against the latch. Mounting holes are to be spaced at 3.50” on center. Latch knob is to be riveted to the slide bar and then welded to insure that the knob will not come off. The stock number shall be molded into the back of the slide latch for ease identification. Furnish one per door. Stamped stainless steel is not acceptable.

4. Coat Hook: Heavy Duty Cast Stainless Steel with a Satin finish. Coat Hook and bumper shall be 2.340” high, 1.230” wide and shall protrude out from the door 3.05”. The hook portion shall have a finished diameter of .250” thick. The stock number shall be molded into the back of the Coat Hook and Bumper for ease in identification. Furnish one per door. Stamped stainless steel is not acceptable. Mount at 48 inches maximum above finished floor in accessible toilet compartments.

5. Door Stop: Heavy Duty Cast Stainless Steel with a satin finish. Plated Zarnac Door stops are unacceptable. Door Stop shall have a 2.125” base diameter and shall protrude 1.80” from the Wall. The bumper at the end of the Door Stop shall be .250” thick. The diameter of the shaft shall be .6875”. The stock number shall be molded into

the back of the Door Stop for ease in identification. Furnish one for each Disabled Accessible door. Stamped stainless steel is not acceptable.

6. Pull Handle: Heavy Duty Cast Stainless Steel with a Satin finish. Plated Zamac Door pulls are unacceptable. Pull Handle shall protrude from the face of the door .940" and shall be 4.735" long. The Pull Handle shall have mounting holes drilled and tapped for 10/24 threads at 3.50" on center. The Pull Handle shall be .655" wide and shall be mounted back to back with the Slide Latch. The stock number shall be molded into the back of the Pull Handle for ease in identification. Stamped stainless steel is not acceptable. Provide u-shaped pull handle below the latch on each side of accessible toilet compartment doors.

B. Continuous Brackets: Full height extruded 6063-T5 Aluminum with a satin anodized finish. The minimum weight shall be 1.685 pounds per lineal foot. Inside opening of Bracket shall be .50" for panels, .75" for pilasters. All holes for mounting to wall and panel/pilaster shall be pre-drilled. Holes are to be spaced at 9" on center along the full length of the Bracket for a total of twelve holes for mounting to the wall and seven holes for mounting to the panel/pilaster. Each Bracket is to have a minimum wall thickness of .125".

C. Chrome-plated, non-ferrous cast alloy material shall not be furnished for hinges, brackets, locks, latches and other fittings and accessories.

PART 3 - EXECUTION

3.01 EXAMINATION

A. Before covering wall and ceiling framing with finish materials, examine framing to ensure that backing plates and structural framing have been installed in such position as to receive all attachment screws.

B. Verify spacing of plumbing fixtures to ensure compatibility with installation of compartments.

C. Do not start the Work of this section until all deficiencies have been corrected.

3.02 INSTALLATION

A. Install partitions and screens as shown in the Shop Drawings and in accordance with manufacturer's instructions and as specified. Install straight, level and plumb.

B. No evidence of drilling, cutting or patching shall be visible in finished Work.

C. Fasten panel brackets securely to walls and ceilings with recommended anchoring devices.

D. Fasten panels and pilasters to brackets with through bolts and nuts.

E. Fasten urinal screen panels to walls with 2 panel brackets, minimum.

F. Provide 1/2 inch spaces between wall surface and panels or pilasters.

G. Provide for adjustment of variations with leveling device on pilasters.

H. Furnish each toilet compartment door with top and bottom hinges, and door latch.

I. Install door strike keeper on each pilaster in alignment with door latch.

J. Furnish each toilet compartment door with one coat hook and bumper.

3.03 TOLERANCES OF INSTALLED WORK

A. Maximum Variation from Plumb or Level: 1/8 inch.

B. Maximum Misplacement from Intended Position: 1/8 inch.

3.04 ADJUSTING AND CLEANING

A. Hardware Adjustment: After installation, adjust hardware for proper operation. Install hinges on in-swinging doors to hold open approximately 30 degrees from the closed position when unlatched. Install hinges on out-swinging doors to return to the fully closed position. Adjust doors so that bottoms of doors are level with the bottoms of the pilasters when the doors are in the closed position.

B. Adjust and align door hardware to uniform clearance at vertical edges of doors. Clearance space shall not exceed 1/4 inch.

C. Cleaning: Clean compartments, hardware, and doors before Substantial Completion and leave free from imperfections. Remove protective coverings.

3.05 CLEANUP

A. Remove rubbish, debris, and waste materials and legally dispose of off the Project site.

3.06 PROTECTION

A. Protect the Work of this section until Substantial Completion.

END OF SECTION

SECTION 10 44 13

FIRE EXTINGUISHERS AND CABINETS

PART 1 - GENERAL

1.01 SUMMARY

A. This section includes the following:
   1. Fire extinguishers and mounting brackets.
   2. Cabinets

1.02 REFERENCES

A. CFC - California Fire Code 2010, Section 906.

B. Title 19, CCR, California Code of Regulations, Public Safety, State Fire Marshal Regulations, Division 01, Chapter 3, Article 5.

C. UL Underwriters Laboratories Inc. Fire Protection Equipment.

1.03 SUBMITTALS

A. Product data showing physical dimensions, operational features, color and finish, anchorage details, rough-in measurements, location and details.

B. Manufacturer's installation instructions.

C. Material Samples: Submit cabinet color and finish samples for selection by Architect.

D. Material Safety Data Sheet: Provide an MSDS sheet with every shipment as set forth in California Labor Code, Section 6390.

E. Manufacturer's operation and maintenance data. Include test, refill or recharge schedules, procedures and re-certification including requirements applicable to Work.

1.04 QUALITY ASSURANCE

A. Conform to Title 19-CCR, Division 01 Chapters 1 and 3, requirements for extinguishers.

B. Fire extinguishers shall have current certification tag attached.

C. Fire extinguishers must be UL certified.

1.05 WARRANTY

A. Manufacturer shall install a 5 year material warranty from the date of final acceptance.

1.06 ENVIRONMENTAL REQUIREMENTS

A. Do not install extinguishers when ambient temperatures may cause freezing.

PART 2 - PRODUCTS

2.01 MANUFACTURERS

A. Products of following manufacturers form basis for design and quality intended.
   1. Ansul®/Sentry 10 Series
   2. Amerex Corporation, Los Angeles, CA, UL No. EX 2764.
   3. Badger Fire Protection, Charlottesville, VA.
   4. General Fire Equipment, Spokane, WA.
   5. Potter-Roemer, Inc., Santa Ana, CA, UL No. EX 3699.
   6. Larsen's Manufacturing

B. Or equal as approved in accordance with Division 01, General Requirements for substitutions.

2.02 EXTINGUISHERS

A. Fire Extinguisher Type: Provide a legally appropriate rechargeable dry-chemical fire extinguisher for every fire extinguisher cabinet as shown on the drawings and as otherwise indicated.
   1. Type ABC multi-purpose dry chemical with UL rating Model Sentry SY1014 4A:60B:C, 10 lb. size, also with red glossy polyester coated steel cylinder, pressure gage, hose and horn. Maximum Height: 21-3/4". Maximum Cylinder Diameter: 8-1/2".
   2. Manufacturer Identification/Information: Manufacturer's name, date manufactured, model number, U.L. approved seal and/or number, contents operating instructions, etc. shall be identified on the fire extinguisher.
   3. Warning and First Aid Label: Fire extinguisher must indicate all standard warnings concerning breathing, eyes, skin and ingestion. Provide emergency and first aid procedures.
   4. Repair Parts: The manufacturer and/or their representative shall maintain within the greater Los Angeles Metropolitan Area an adequate stock of replacement parts, available for immediate delivery.

2.03 CABINETS

A. Model: Potter-Roemer- ALTA or equal.
   1. Size: To accommodate extinguisher specified herein.
   2. Mounting Style: Semi-recessed, bottom of cabinet at 32 inches above finish floor, 4 inches maximum projection.
      a. Steel: Cold rolled steel with electrostatically applied thermally fused coating, color as selected by the Architect from manufacturer's standard list.
   3. Door Style: Center break glass with lock.
   4. Glazing: clear tempered safety glass.

5. Lettering

   a. Vertical: Red.

B. Latching and locking hardware shall be operable with a single effort by lever type hardware, or other hardware designed so as to not require grasping the opening hardware and not require a force greater than 5 lbs to open.

   1. Force required to activate controls shall not exceed 5 lbs.

   2. Be recessed or semi-recessed in order not to protrude more than 4 inches from face of wall.

   3. Mount between 15-48 inches AFF for forward approach. Refer also to drawings.

2.04 FABRICATION OF CABINETS

A. Form body of cabinet with tight inside corners and seams.

B. Pre-drill holes for anchorage.

C. Form perimeter trim and door stiles by welding, filling and grinding smooth.

D. Hinge doors for 180 degree opening with continuous piano hinge.

E. Glaze doors with resilient channel gasket glazing.

F. Pull Handle: U-pull type with roller catch, 5 pounds maximum operating force.

2.05 MOUNTING BRACKETS

A. Manufacturer's standard steel, designed to secure extinguisher, of sizes required for types and capacities of extinguishers indicated, with plated or baked-enamel finish.

B. Provide brackets for extinguishers not located in cabinets sized for unit.

PART 3 - EXECUTION

3.01 INSPECTION

A. Verify rough openings for cabinet and mounting brackets are correctly sized and located.

B. Beginning of installation means acceptance of existing conditions.

3.02 INSTALLATION

A. Install cabinets plumb and level in wall openings. Locate cabinets to a height to yield a maximum of 48 inches from finish floor to top of handle of fire extinguisher unit. Locate cabinet within five feet of the main egress door.

B. Mount brackets to a height to yield 48 inches maximum to handle of fire extinguisher where no cabinets are indicated. Coordinate suitable backing at the mounting bracket location.

C. Secure rigidly in place.

3.03 INSPECTION BY REGULATORY AGENCIES

A. Schedule inspection with agencies and Owner.

B. Furnish approval certificates issued by jurisdictional authorities.

END OF SECTION

SECTION 10 51 00

METAL LOCKERS

PART 1 GENERAL

1.01 SECTION INCLUDES

A. Locker units with hinged doors.

B. Metal tops and filler panels.

1.02 RELATED REQUIREMENTS

A. Section 03 30 00 - Cast-in-Place Concrete: Concrete base construction.

1.03 REFERENCE STANDARDS

A. ASTM A 653/A 653M - Standard Specification for Steel Sheet, Zinc-Coated (Galvanized) or Zinc-Iron Alloy-Coated (Galvannealed) by the Hot-Dip Process; 2007.

1.04 SUBMITTALS

A. See Section 01 33 00 - Submittal Procedures.

B. Product Data: Provide data on locker types, sizes and accessories.

C. Shop Drawings: Indicate locker plan layout, numbering plan.

1.05 DELIVERY, STORAGE, AND HANDLING

A. Protect locker finish and adjacent surfaces from damage.

PART 2 PRODUCTS

2.01 MANUFACTURERS

A. Lockers:
1. Lyon Workspace Products; Product: www.lyonworkspace.com.
2. Penco Products, Inc; Product: www.pencoproducts.com.
3. Republic Storage Systems Co; Product: www.republicstorage.com.
4. Substitutions: See Section 01 60 00 - Product Requirements.

2.02 MATERIALS

A. Sheet Steel: ASTM A 653/A 653M SS Grade 33/230, with G60/Z180 coating, stretcher leveled; to the following minimum thicknesses:
1. Body and Shelf: 24 gage, 0.024 inch (0.6 mm).
2. Door Outer Face: 18 gage, 0.048 inch (1.2 mm).
3. Door Inner Face: 20 gage, 0.036 inch (0.9 mm).
4. Door Frame: 16 gage, 0.060 inch (1.5 mm).
5. Hinges: 14 gage, 0.075 inch (1.9 mm).
6. Base: 20 gage, 0.036 inch (0.9 mm).
7. Sloping Top: 20 gage, 0.036 inch (0.9 mm).
8. Trim: 20 gage, 0.036 inch (0.9 mm).

B. Accessories For Each Locker: Two single prong wall hooks, coat hanger bar

2.03 LOCKER UNITS

A. Width: 12 inches (225 mm).

B. Depth: 16 inches (300 mm).

C. Height: 72 inches (1,830 m).

D. Configuration: single tier.

E. Mounting: Surface mounted.

F. Base: 6” legs

G. Top: Sloped metal with closures.

H. Ventilation Method: Door louvers.

I. Class: Conventional.

J. Locker Body: Formed and flanged; with steel stiffener ribs; electric spot welded.

K. Frames: Formed channel shape, welded and ground flush, welded to body, resilient gaskets and latching for quiet operation.

L. Doors: Hollow double pan, sandwich construction, 1-3/16 inch (30 mm) thick; welded construction, channel reinforced top and bottom with intermediate stiffener ribs, grind and finish edges smooth.

M. Hinges: Two for doors under 42 inches (1 050 mm) high; three for doors over 42 inches (1 050 mm) high; weld securely to locker body and door.

N. Integral Cylinder Lock: Master keyed; provide two keys per lock and four master keys.

O. Number Plates: Provide oval shaped brass plates. Form numbers of block font style with ADA designation, in contrasting color.

P. Provide ventilation openings at top and bottom of each locker.

Q. Finish edges smooth without burrs.

R. Fabricate sloped metal tops, ends and closure pieces.

2.04 FINISHING

A. Clean, degrease, and neutralize metal; prime and finish with one coat of baked enamel.

B. Paint locker units 1 color, as selected.

PART 3 EXECUTION

3.01 INSTALLATION

A. Install in accordance with manufacturer's instructions.

B. Install lockers plumb and square.

C. Place and secure on prepared base.

D. Secure lockers with anchor devices to suit substrate materials. Minimum Pullout Force:100 LB.

E. Bolt adjoining locker units together to provide rigid installation.

F. Install end panels, filler panels, and sloped tops.

G. Install accessories.

H. Replace components that do not operate smoothly.

3.02 CLEANING

A. Clean locker interiors and exterior surfaces.

END OF SECTION

SECTION 12 36 00

SOLID SURFACING

PART 1 GENERAL

1.01 SECTION INCLUDES

A. Countertops for architectural cabinetwork.

1.02 RELATED REQUIREMENTS

A. Section 06 41 00 - Laminate-Clad Wood Casework.

B. Section 22 40 00 - Plumbing Fixtures: Sinks.

1.03 REFERENCE STANDARDS

A. ASTM D 635 - Standard Test Method for Rate of Burning and/or Extent and Time of Burning of Plastics in a Horizontal Position; 2006.

B. ASTM E 84 - Standard Test Method for Surface Burning Characteristics of Building Materials; 2008.

C. ISSFA-2 - Classification and Standards for Solid Surfacing Material; International Solid Surface Fabricators Association; 2001 (2002)

D. WI (MAN) - Manual of Millwork; Woodwork Institute; 11th Edition.

1.04 SUBMITTALS

A. See Section 01 3300 - Submittal Procedures.

B. Product Data: Manufacturer's data sheets on each product to be used, including:
   1. Preparation instructions and recommendations.
   2. Storage and handling requirements and recommendations.
   3. Specimen warranty.

C. Shop Drawings: Complete details of materials and installation; combine with shop drawings of cabinets and casework specified in other sections.

D. Selection Samples: For each finish product specified, color chips representing manufacturer's full range of available colors and patterns.

E. Test Reports: Chemical resistance testing, showing compliance with specified requirements.

F. LEED Report: Submit for low-emitting materials

G. Maintenance Data: Manufacturer's instructions and recommendations for maintenance and repair of countertop surfaces.

1.05 QUALITY ASSURANCE

A. Fabricator Qualifications: Same fabricator as for cabinets on which tops are to be installed.

B. Installer Qualifications: Fabricator.

1.06 DELIVERY, STORAGE, AND HANDLING

A. Store products in manufacturer's unopened packaging until ready for installation.

B. Store and dispose of solvent-based materials, and materials used with solvent-based materials, in accordance with requirements of local authorities having jurisdiction.

1.07 FIELD CONDITIONS

A. Maintain environmental conditions (temperature, humidity, and ventilation) within limits recommended by manufacturer for optimum results. Do not install products under environmental conditions outside manufacturer's absolute limits.

PART 2 PRODUCTS

2.01 COUNTERTOP ASSEMBLIES

A. Solid Surfacing Countertops: Solid surfacing sheet or plastic resin casting over continuous substrate.
   1. Flat Sheet Thickness: 1/4 inch, minimum.
   2. Solid Surfacing Sheet and Plastic Resin Castings: Complying with ISSFA-2 and NEMA LD 3; acrylic or polyester resin, mineral filler, and pigments; homogenous, non-porous and capable of being worked and repaired using standard woodworking tools; no surface coating; color and pattern consistent throughout thickness.
      a. Surface Burning Characteristics: Flame spread 25, maximum; smoke developed 450, maximum; when tested in accordance with ASTM E 84.
      b. Finish on Exposed Surfaces: Matte, gloss rating of 5 to 20.
      c. Color/Pattern Family: Refer to Section 09 0000.
      d. Manufacturers:
         1) Dupont: www.corian.com.
         2) Avonite Surfaces: www.avonitesurfaces.com.
         3) Or equal
         4) Substitutions: See Section 01 6000 - Product Requirements.
   3. Other Components Thickness: 1/2 inch, minimum.
   4. Back and End Splashes: Same sheet material, square top; minimum 4 inches high.

2.02 ACCESSORY MATERIALS

A. Adhesives: Chemical resistant waterproof adhesive as recommended by manufacturer of materials being joined.

B. Cove Molding for Top of Splashes: Rubber with semi-gloss finish and T-spline to fit between splash and wall; 1/2 inch by 1/2 inch; color as selected.

C. Joint Sealant: Mildew-resistant silicone sealant, white.

2.03 FABRICATION

A. Fabricate tops and splashes in the largest sections practicable, with top surface of joints flush.
   1. Join lengths of tops using best method recommended by manufacturer.
   2. Fabricate to overhang fronts and ends of cabinets 1 inch except where top butts against cabinet or wall.
   3. Prepare all cutouts accurately to size; replace tops having improperly dimensioned or unnecessary cutouts or fixture holes.

B. Provide back/end splash wherever counter edge abuts vertical surface unless otherwise indicated.
   1. Secure to countertop with concealed fasteners and with contact surfaces set in waterproof glue.
   2. Height: 4 inches, unless otherwise indicated.

C. Solid Surfacing: Fabricate tops up to 144 inches long in one piece; join pieces with adhesive sealant in accordance with manufacturer's recommendations and instructions.

PART 3 EXECUTION

3.01 EXAMINATION

A. Do not begin installation until substrates have been properly prepared.

B. If substrate preparation is the responsibility of another installer, notify Architect of unsatisfactory preparation before proceeding.

C. Verify that wall surfaces have been finished and mechanical and electrical services and outlets are installed in proper locations.

3.02 PREPARATION

A. Clean surfaces thoroughly prior to installation.

B. Prepare surfaces using the methods recommended by the manufacturer for achieving the best result for the substrate under the project conditions.

3.03 INSTALLATION

A. Securely attach countertops to cabinets using concealed fasteners. Make flat surfaces level; shim where required.

B. Seal joint between back/end splashes and vertical surfaces.
   1. Where indicated use rubber cove molding.
   2. Where applied cove molding is not indicated use specified sealant.

3.04 CLEANING

A. Clean countertops surfaces thoroughly.

3.05 PROTECTION

A. Protect installed products until completion of project.

B. Touch-up, repair or replace damaged products before Substantial Completion.

END OF SECTION

SECTION 220500

BASIC MATERIALS AND METHODS - PLUMBING

PART 1 - GENERAL

1.01 APPLICABLE REQUIREMENTS

A. All work under this Section shall comply with the requirements of General Conditions, Supplemental Conditions, Special Conditions and Division 01 - General Requirements, and shall include all Plumbing Sections specified herein.

1.02 SCOPE OF THIS SECTION

A. All work to be furnished and installed under this Section shall comply with all the requirements of Division 01, and shall include, but not necessarily be limited to, the following:

1. Compliance with all codes and standards applicable to this jurisdiction.
2. Shop Drawings for Equipment
3. Coordination Documents
4. Record Drawings
5. Start-up Service and Building Commissioning
6. Instruction, Maintenance, and O & M Manuals
7. Work associated with Delivery, Storage, and Handling of products
8. Work associated with provision of Temporary Facilities
9. Preparation of Posted Operating Instructions
10. Meeting Project Safety and Indemnity requirements
11. Proper Cleaning and Closing
12. Supplying proper Warranty information
13. Supply specified Guarantee documentation
14. Design and provision of Supports and Anchors
15. Pipe Portals
16. Equipment Rails
17. Access Panels and Doors
18. Identification Markers
19. Coordination of Electrical requirements for equipment provided

1.03 DESCRIPTION OF WORK

A. The Contract Documents, including Specifications and Construction Drawings, are intended to provide all material and labor to install complete plumbing systems for the Fox theater Annex building and the Black Box/Exhibit Hall and shall interface with all existing building systems affected by new construction.

B. The Contractor shall refer to the architectural interior details, floor plans, elevations, and the structural and other Contract Drawings and he shall coordinate his work with that of the other trades to avoid interference. The plans are diagrammatic and show generally the locations of the fixtures, equipment, and pipe lines and are not to be scaled; all dimensions and existing conditions shall be checked at the building.

C. The Contractor shall comply with the project closeout requirements as detailed in General Requirements of Division 01.

D. Where project involves interface with existing building and site systems, every effort has been made to note existing utilities and services. However, the Contractor should thoroughly familiarize themselves with existing conditions and be aware that in some cases information is not available as to concealed conditions, which exist in portions of the existing building affected by this work.

1.04 DESCRIPTION OF BID DOCUMENTS

A. Specifications:

1. Specifications, in general, describe quality and character of materials and equipment.

2. Specifications are of simplified form and include incomplete sentences.

B. Drawings:

1. Drawings in general are diagrammatic and indicate sizes, locations, connections to equipment and methods of installation.

2. Before proceeding with work check and verify all dimensions.

3. Assume all responsibility for fitting of materials and equipment to other parts of equipment and structure.

4. Make adjustments that may be necessary or requested, in order to resolve space problems, preserve headroom, and avoid architectural openings, structural members and work of other trades.

5. Where existing pipes, conduits and/or ducts prevent installation of new work as indicated, relocate, or arrange for relocation, of existing pipes, conduits and/or ducts. Verify exact location and elevation of existing piping prior to any construction.

6. If any part of Specifications or Drawings appears unclear or contradictory, apply to Architect or Engineer for his interpretation and decision as early as possible, including during bidding period.

1.05 DEFINITIONS

A. "Above Grade": Not buried in the ground and not embedded in concrete slab on ground.

B. "Actuating" or "Control" Devices: Automatic sensing and switching devices such as thermostats, pressure, float, electro-pneumatic switches and electrodes controlling operation of equipment.

C. "Below Grade": Buried in the ground or embedded in concrete slab on ground.

D. "Concealed": Embedded in masonry or other construction, installed in furred spaces, within double partitions or hung ceilings, in trenches, in crawl spaces, or in enclosures. In general, any item not visible or directly accessible.

E. "Connect": Complete hook-up of item with required service.

F. "Exposed": Not installed underground or "concealed."

G. "Furnish": To supply equipment and products as specified.

H. "Indicated," "Shown" or " "Noted": As indicated, shown or noted on Drawings or Specifications.

I. "Install": To erect, mount and connect complete with related accessories.

J. "Motor Controllers": Manual or magnetic starters (with or without switches), individual push buttons or hand-off-automatic (HOA) switches controlling the operation of motors.

K. "Piping": Pipe, tube, fittings, flanges, valves, controls, strainers, hangers, supports, unions, traps, drains, insulation, and related items.

L. "Provide": To supply, install and connect as specified for a complete, safe and operationally ready system.

M. "Reviewed," "Satisfactory" or "Directed": As reviewed, satisfactory, or directed by or to Architect/Engineer/Owner.

N. "Rough-In": Provide all indicated services in the necessary arrangement suitable for making final connections to fixture or equipment.

O. "Shall": An exhortation or command to complete the specified task.

P. "Similar" or "Equal": Of base bid manufacture, equal in materials, weight, size, design, and efficiency of specified products.

Q. "Supply": To purchase, procure, acquire and deliver complete with related accessories.

R. “Typical” or “Typ”: Exhibiting the qualities, traits, or characteristics that identify a kind, class, number, group or category. Of or relating to a representative specimen. Application shall apply to all other similarly identified on plan or detail.

S. "Will": A desire to complete the specified task. Allows some flexibility in application as opposed to "Shall."

T. "Wiring": Raceway, fittings, wire, boxes and related items.

U. "Work": Labor, materials, equipment, apparatus, controls, accessories, and other items required for proper and complete installation.

1.06 RELATED WORK SPECIFIED ELSEWHERE

A. All Division 22 Plumbing sections included herein.

B. Division 02: Existing Conditions. Coordinate with Civil Engineer:

1. Coordination of excavation of trenches and the installation of mechanical systems and piping on site.

C. Division 03: Concrete.

1. All concrete work for Plumbing Division shall be included in Division 22 under the appropriate Sections and shall include:

a. Concrete curbs and housekeeping pads for the mechanical equipment.
b. Thrust blocks, pads, and boxes for mechanical equipment.
c. Coordination of floor drain and floor sink installations in sloped floors.

D. Division 07: Thermal and Moisture Protection.

1. Flashing and sheet metal.

2. Sealants and caulking.

3. Firestopping.

E. Division 09: Finishes:

1. Division 22 installers shall perform all painting, except where specifically stated otherwise in Division 09.

2. Painting of all exposed steel, piping, insulation, equipment and materials.

3. Paint all exposed gas piping, interior and exterior to the building, yellow.

F. Division 26: Electrical is related to work of:

1. Power connections to all plumbing equipment.

2. Life safety provisions.

1.07 CODES AND STANDARDS

A. The Contractor is cautioned that code requirements not explicitly detailed in these specifications or drawings, but which may be reasonably inferred or implied from the nature of the project, must be provided as part of the contract.

B. Perform all tests required by governing authorities and required under all Division 22 Sections. Provide written reports on all tests.

C. Electrical devices and wiring shall conform to the latest standards of NEC; all devices shall be UL listed and labeled.

D. All plumbing work shall comply with the Americans with Disabilities Act (ADA).

E. All excavation work must comply with all provisions of state laws including notification to all owners of underground utilities at least 48 business day hours, but not more than 10 business days, before commencing an excavation.

F. Provide in accordance with rules and regulations of the following:

1. Building Codes enforced by the Authority Having Jurisdiction in California:

a. 2010 Building Standards Administrative Code, Part 1, Title 24 C.C.R.
b. 2010 California Building Code (CBC), Part 2, Title 24 C.C.R.
(2009 International Building Code and 2010 California Amendments)

c. 2010 California Electrical Code (CEC), Part 3, Title 24 C.C.R.
(2008 National Electrical Code and 2010 California Amendments)

d. 2010 California Mechanical Code (CMC) Part 4, Title 24 C.C.R
2009 Uniform Mechanical Code and 2010 California Amendments)

e. 2010 California Plumbing Code (CPC), Part 5, Title 24 C.C.R.
(2009 Uniform Plumbing Code and 2010 California Amendments)

f. 2010 California Energy Code (CEC), Part 6, Title 24 C.C.R.
g. 2010 California Fire Code, Part 9, Title 24 C.C.R.
(2009 International Fire Code and 2010 California Amendments

h. 2010 California Green building Standards Code (CALGreen), Part 11, Title 24 C.C.R.
i. 2010 California Referenced Standards, Part 12, Title 24 C.C.R.
j. Title 19 C.C.R. Public Safety, State Fire Marshal Regulations.

2. Local, city, county and state codes and ordinances.

3. Local Bureau of Buildings.

4. Local Health Department.

5. Local and State Fire Prevention Districts.

6. California Administrative Codes.

G. Provide in accordance with appropriate referenced standards of the following:

1. NFPA - National Fire Protection Association.
2. CSA - Canadian Standards Association.
3. ADC - Air Diffuser Council.
4. ANSI - American National Standards Institute.
5. ASHRAE - American Society of Heating, Refrigerating & Air Conditioning Engineers.

6. ASME - American Society of Mechanical Engineers.
7. ASTM - American Society for Testing Materials.
8. AWS - American Welding Society.
9. AWWA - American Water Works Association.
10. FM - Factory Mutual.
11. MSS - Manufacturer's Standardization Society.
12. NEMA - National Electrical Manufacturer's Association.
13. SMACNA - Sheet Metal and Air Conditioning Contractors National Association.
14. UL - Underwriter's Laboratories.
15. ADA - Americans with Disabilities Act.
16. ETL - Electrical Testing Laboratories.
17. ASSE - American Society of Sanitary Engineers.
18. PDI - Plumbing and Drainage Institute.
19. IAPMO - International Association of Plumbing and Mechanical Officials.
20. CISPI - Cast Iron Soil Pipe Institute.

1.08 QUALITY ASSURANCE

A. Manufacturer's Nameplates: Nameplates on manufactured items shall be aluminum or Type 304 stainless steel sheet, not less than 20 USG (0.0375”), riveted or bolted to the manufactured item, with nameplate data engraved or punched to form a non-erasable record of equipment data.

B. Current Models: All work shall be as follows:

1. Manufactured items furnished shall be the current, cataloged product of the manufacturer.

2. Replacement parts shall be readily available and stocked in the USA.

C. Experience: Unless more stringent requirements are specified in other sections of Division 22, manufactured items shall have been installed and used, without modification, renovation or repair, on other projects for not less than one year prior to the date of bidding for this project.

1.09 GENERAL REQUIREMENTS

A. Examine all existing conditions at building site.

B. Review contract documents and technical specifications for extent of new work to be provided.

C. Provide and pay for all permits, licenses, fees and inspections.

D. Install equipment and materials to provide required access for servicing and maintenance. Coordinate the final location of concealed equipment and devices requiring access with final location of required access panels and doors. Allow ample space for removal of all parts that require replacement or servicing. This work shall include furnishing and installing all access doors required for mechanical access.

E. Verify final locations for rough-ins with field measurements and with the requirements of the actual equipment to be connected. Refer to Equipment Specifications in Divisions 02 through 48 for rough-in requirements.

F. Coordinate mechanical equipment and materials installation with other building components.

G. Verify all dimensions by field measurements.

H. Arrange for chases, slots, and openings in other building components to allow for plumbing installations.

I. Coordinate the installation of required supporting devices and sleeves to be set in poured-in-place concrete and other structural components, as they are constructed.

J. Sequence, coordinate, and integrate installations of mechanical materials and equipment for efficient flow of the work. Give particular attention to large equipment requiring positioning prior to closing-in the building.

K. Coordinate the cutting and patching of building components to accommodate the installation of mechanical equipment and materials. Contractor to provide for all cutting and patching required for installation of his work unless otherwise noted.

L. Where mounting heights are not detailed or dimensioned, install plumbing services and overhead equipment to provide the maximum headroom possible.

M. Install plumbing equipment to facilitate maintenance and repair or replacement of equipment components. Connect equipment for ease of disconnecting, without interference with other installations.

N. Coordinate the installation of plumbing materials and equipment above ceilings with ductwork, piping, conduits, suspension system, light fixtures, cable trays, sprinkler piping and heads, and other installations.

O. Coordinate connection of plumbing systems with exterior underground and overhead utilities and services. Comply with requirements of governing regulations, franchised service companies, and controlling agencies. Provide required connection for each service.

P. Coordinate with Owner in advance to schedule shutdown of existing systems to make new connections. Provide valves in new piping to allow existing system to be put back in service with minimum down time.

Q. All materials (such as insulation, piping, wiring, controls, etc.) located within air plenum spaces, air shafts, and occupied spaces shall have a flame-spread index of 25 or less, and smoke-developed index of 50 or less, as tested by ASTM E84 (NFPA 255) Method. In addition, the products, when tested, shall not drip flame particles, and flame shall not be progressive. Provide Underwriters Laboratories, Inc., label or listing, or satisfactory certified test report from an approved testing laboratory to prove the fire hazard ratings for materials proposed for use do not exceed those specified.

R. Coordinate installation of floor drains and floor sinks with work of other trades, such that finished floor slopes to drains and floor sinks are flush with surrounding floor.

S. Products made of or containing lead, asbestos, mercury or other known toxic or hazardous materials are not acceptable for installation under this Division. Any such products installed as part

of the work of the Division shall be removed and replaced and all costs for removal and replacement shall be borne solely by the installing Contractor.

1.10 MINOR DEVIATIONS

A. The Drawings are diagrammatic and show the general arrangements of all plumbing work and requirements to be performed. It is not intended to show or indicate all offsets, fittings, and accessories which will be required as a part of the work of this Section.

B. The Contractor shall review the structural and architectural conditions affecting his work. It is the specific intention of this section that the contractor's scope of work shall include

1. Proper code complying support systems for all equipment whether or not scheduled or detailed on drawings or in these specifications

2. Minor deviations from the mechanical plans required by architectural and structural coordination.

C. The Contractor shall study the operational requirements of each system, and shall arrange his work accordingly, and shall furnish such fittings, offsets, supports, accessories, as are required for the proper and efficient installation of all systems from the physical space available for use by this section. This requirement extends to the Contractor's coordination of this section's work with the "Electrical Work." Should conflicts occur due to lack of coordination, the time delay, cost of rectification, demolition, labor and materials, shall be borne by the Contractor and shall not be at a cost to the Owner.

D. Minor deviations in order to avoid conflict shall be permitted where the design intent is not altered.

E. Advise the Architect, in writing, in the event a conflict occurs in the location or connection of equipment. Bear all costs for relocation of equipment, resulting from failure to properly coordinate the installation or failure to advise the Architect of conflict.

1.11 PRODUCT SUBSTITUTIONS

A. The Contractor shall certify the following items are correct when using substituted products other than those scheduled or shown on the drawings as a basis of design:

1. The proposed substitution does not affect dimensions shown on drawings.

2. The Contractor shall pay for changes to building design, including engineering design, detailing, structural supports, and construction costs caused by proposed substitution.

3. The proposed substitution has no adverse effect on other trades, construction schedule, or specified warranty requirements.

4. Maintenance and service parts available locally are readily obtainable for the proposed substitute.

B. The Contractor further certifies function, appearance, and quality of proposed substitution are equivalent or superior to specified item.

C. The Contractor agrees that the terms and conditions for the substituted product that are found in the contract documents apply to this proposed substitution.

1.12 SHOP DRAWINGS AND EQUIPMENT SUBMITTALS

A. Prior to construction submit for review all materials and equipment in accordance with Division 01 requirements.

B. After approval of preliminary list of materials, the Contractor shall submit Shop Drawings and manufacturer's Certified Drawings to the Architect for approval.

C. The Contractor shall submit approved Shop Drawings and manufacturer's equipment cuts, of all equipment requiring connection by Division 26, to the Electrical Contractor for final coordination of electrical requirements. Contractor shall bear all additional costs for failure to coordinate with Division 26.

D. Submittals and Shop Drawings shall be submitted as a complete package bound in a 3-ring binder with tabs for each specification section. The approved submittals shall be converted into Operations & Maintenance Manuals at the completion of the project. Submit six (6) typed copies of submittals. Refer to Division 01 for additional requirements.

1.13 UNIT PRICING SUBMITTALS

A. Prior to construction submit for review all materials and equipment in accordance with Division 01 requirements.

B. Preliminary List of Materials and Unit Price Items: Within thirty (30) days after awarding of the Contract, submit to architect for preliminary approval a complete list of manufacturer’s names and model numbers of proposed materials and equipment. Also include proposed list of unit price items for review.

1. Indicate substituted items.

2. Identify test and balancing agency.

3. Identify independent testing laboratory for water analysis.

C. The Contractor shall submit with preliminary list of materials a unit price list for each item furnished on this project. Included with price shall be labor cost index.

D. Submittals and Shop Drawings shall be submitted as a complete package bound in a 3-ring binder with tabs for each specification section. Submit six (6) typed copies of submittals. Refer to Division 01 for additional requirements.

1.14 COORDINATION DOCUMENTS

A. The Contractors shall prepare coordinated Shop Drawings to coordinate the installation and location of all piping and all system appurtenances with other trades. The Drawings shall include all mechanical rooms and floor plans. The Drawings shall be Overlay Drawings showing each discipline on a single sheet. The Drawings shall be keyed to the structural column identification system, and shall be progressively numbered. Prior to completion of the Drawings, the Contractor shall coordinate the proposed installation with the Architect and the structural requirements, and all other trades (including HVAC, Fire Protection, Electrical, Ceiling Suspension, and Tile Systems), and provide reasonable maintenance access requirements. When conflicts are identified, modify system layout as necessary to resolve. Do not fabricate, order or install any equipment or materials until coordination documents are approved by the General Contractor, Architect, and Owner. Within

thirty (30) days after award of Contract, submit proposed coordination document Shop Drawing schedule, allowing adequate time for review and approval by parties mentioned above. Drawings should be prepared and submitted for approval on a floor-by-floor basis to phase with building construction.

B. The Drawings shall be prepared as follows:

1. The Sheet Metal (Mechanical) Contractor shall prepare Drawings to an accurate scale of 1/4" = 1'-0" or larger, on reproducible media sheets (vellum) or AutoCAD disks. Obtain reproducibles or AutoCAD files of the HVAC design from the Architect, or Engineer, at cost plus. Drawings are to be same size as Contract Drawings and shall indicate location, size and elevation above finished floor, of all HVAC equipment, ductwork, and piping.

2. The Plumbing Contractor shall obtain reproducible plans or AutoCAD disks from the Mechanical Contractor, and indicate all plumbing lines including fittings, hangers, access panels, valves, and bottom of pipe elevations above finished floor.

3. The Fire Protection Contractor shall obtain reproducible plans or AutoCAD disks with the detailed mechanical and plumbing work shown. The Sprinkler Contractor shall indicate location of all sprinkler heads and piping, including valves and fittings, dimensions from column lines, and bottom of pipe elevations above finished floor.

4. Plans are to incorporate all addenda items and change orders.

5. Distribute plans to all trades and provide additional coordination as needed.

C. Advise the Architect in the event a conflict occurs in the location or connection of equipment. Bear all costs for relocation of equipment, resulting from failure to properly coordinate the installation or failure to advise the Architect of conflict.

D. Provide means of access to all valves, controllers, operable devices, and other apparatus that may require adjustment or servicing.

E. Verify in field exact size, location, invert, and clearances regarding all existing material, equipment and apparatus, and advise the Architect of any discrepancies between those indicated on the Drawings and those existing in the field prior to any installation related thereto.

F. Final Coordination Drawings with all appropriate information added are to be submitted as Record Drawings at completion of project.

G. Provide copy of Record Drawings to Testing and Balancing Contractor for their use when doing their work.

1.15 RECORD DRAWINGS

A. Before commencing installation, obtain an extra set of prints from Architect, marked "Record." Keep this set of Drawings at the job site at all times, and use it for no other purpose but to mark on it all the changes and revisions to the Contract Drawings resulting from coordination with other trades. At the completion of the project edit project AutoCAD files to incorporate all site markups, changes, and revisions to the Contract Drawings. Submit plots of Record Drawings and six copies CD Roms labeled with all record AutoCAD drawing files.

B. Provide copy of Record Drawings to Testing and Balancing Contractor for use when doing his work.

C. Mark Drawings to indicate revisions to piping, size, and location both exterior and interior; including locations of other control devices, valves, and similar units requiring periodic maintenance or repair; actual equipment locations, dimensioned from column lines; actual inverts and locations of underground piping; concealed equipment, dimensioned to column lines; mains and branches of piping systems, with valves and control devices located and numbered, concealed unions located, and with items requiring maintenance located (i.e. – valves, traps, strainers, expansion compensators, tanks, etc.); Change Orders; concealed control system devices.

D. Mark Specifications to indicate approved substitutions; Change Orders; actual equipment and materials used.

E. Refer also to Special Conditions in Division 01 for full scope of requirements.

1.16 START-UP SERVICE AND BUILDING COMMISSIONING

A. Prior to start-up, be assured that systems are ready, including checking the following: Proper equipment rotation, proper wiring, auxiliary connections, lubrication, venting, controls, and installed and properly set relief and safety valves.

B. Refer to other Division 22 Sections for additional requirements.

1.17 INSTRUCTION, MAINTENANCE, AND O&M MANUALS

A. O&M Manuals: Upon completion of the work, the Contractor shall submit to the Architect complete set of operating instructions, maintenance instructions, part lists, and all other bulletins and brochures pertinent to the operation and maintenance for equipment furnished and installed as specified in this section, bound in a durable binder. Refer to Division 01.

B. The Contractor shall be responsible for proper instruction of Owner's personnel for operation and maintenance of equipment, and apparatus installed as specified in Division 22 to be no less than 2 hours for each piece of equipment.

1.18 DELIVERY, STORAGE AND HANDLING

A. Deliver products to project properly identified with names, model numbers, types, grades, compliance labels, and similar information needed for distinct identifications; adequately packaged and protected to prevent damage during shipment, storage, and handling.

B. Store equipment and materials in an environmentally controlled area at the site, unless off-site storage is authorized in writing. Protect stored equipment and materials from damage. Piping shall be stored in bundles covered with visqueen. Piping showing signs of rust shall be removed from site and replaced.

C. Coordinate deliveries of mechanical materials and equipment to minimize construction site congestion. Limit each shipment of materials and equipment to the items and quantities needed for the smooth and efficient flow of installations.

1.19 TEMPORARY FACILITIES

A. Refer to Division 01 for the requirements of temporary water and sewer for construction and safety. Provide temporary water, and sewer, etc. services as necessary during the construction period and as required to maintain operation of existing systems.

1.20 POSTED OPERATING INSTRUCTIONS

A. Furnish approved operating instructions for systems and equipment indicated in the technical sections for use by operation personnel. The operating instructions shall include wiring diagrams, control diagrams, and control sequence for each principal system and equipment. Print or engrave operating instructions and frame under glass or in approved laminated plastic. Post instructions where directed. Attach or post operating instructions adjacent to each principal system and equipment including start-up, operating, shutdown, safety precautions and procedure in the event of equipment failure. Provide weather-resistant materials or weatherproof enclosures for operating instructions exposed to the weather. Operating instructions shall not fade when exposed to sunlight and shall be secured to prevent easy removal.

1.21 SAFETY AND INDEMNITY

A. The Contractor shall be solely and completely responsible for conditions of the job site including safety of all persons and property during performance of the work. This requirement will apply continuously and not be limited to normal hours of work.

B. No act, service, Drawing, review, or Construction Review by the Owner, Architect, the Engineers or their consultants, is intended to include the review of the adequacy of the Contractor's safety measures, in, on, or near the construction site.

C. The Contractor performing work under this Division of the Specifications shall hold harmless, indemnify and defend the Owner, the Architect, the Engineers and their consultants, and each of their officers, employees and agents from any and all liability claim, losses or damage arising, or alleged to arise from bodily injury, sickness, or death of a person or persons, and for all damages arising out of injury to or destruction of property arising directly or indirectly out of, or in connection with, the performance of the work under the Division of the Specifications, and from the Contractor's negligence in the performance of the work described in the Construction Contract Documents; but not including the sole negligence of the Owner, the Architect, the Engineers, and their consultants or their officers, employees and agents.

1.22 CLEANING AND CLOSING

A. All work shall be inspected, tested, and approved before being concealed or placed in operation.

B. Upon completion of the work, all equipment installed as specified in this section, and all areas where work was performed, shall be cleaned to provide operating conditions satisfactory to the Architect.

1.23 WARRANTIES

A. All equipment shall be provided with a minimum one-year warranty to include parts and labor. Refer to individual Equipment Specifications for extended or longer-term warranty requirements.

B. Provide complete warranty information for each item, to include product or equipment, date of beginning of warranty or bond; duration of warranty or bond; and names, addresses, telephone numbers and procedures for filing a claim and obtaining warranty services.

C. Service during warranty period: Contractor shall provide maintenance as specified elsewhere during the 12-month warranty period.

1.24 GUARANTEE

A. The Contractor shall guarantee and service all workmanship and materials to be as represented by him and shall repair or replace, at no additional cost to the Owner, any part thereof which may become defective within the period of one (1) year after the Date of Final Acceptance, ordinary wear and tear excepted.

B. Contractor shall be responsible for and pay for any damages caused by or resulting from defects in his work.

PART 2 - PRODUCTS

2.01 GENERAL

A. Furnish and install all new material, equipment, and apparatus hereinafter specified unless specifically noted otherwise. All material, equipment, and apparatus shall be identified by the manufacturer's name, nameplate, and pertinent data.

B. All materials, equipment, and apparatus are mentioned as standards unless noted otherwise. The words "or approved equal" shall be considered to be subsequent to all manufacturers' names used herein, unless specifically noted that substitutes are not allowed.

2.02 SUPPORTS AND ANCHORS

A. General: Comply with applicable codes pertaining to product materials and installation of supports and anchors, including, but not limited to, the following:

1. UL and FM Compliance: Provide products, which are UL listed and FM approved.

2. ASCE 7-05: “American Society of Civil Engineers.”

3. 2006 International Building Code (IBC)

4. MSS Standard Compliance: Manufacturer's Standardization Society (MSS).

5. SMACNA: "Seismic Restraint Manual: Guidelines for Mechanical Systems."

6. Provide copper plated or plastic coated supports and attachment for copper piping systems. Field applied coatings or tape is unacceptable.

7. Manufacturer: B-Line, Grinnell, Michigan, Tolco, Kin-Line, Simpson, or Superstrut.

B. Horizontal Piping Hangers and Supports: Except as otherwise indicated, provide factory-fabricated hangers and supports of one of the following MSS types listed.

1. Adjustable Steel Clevis Hangers: MSS Type 1.

2. Adjustable Steel Swivel Band Hangers: MSS Type 10.

3. U-Bolts: MSS Type 24.

4. Pipe Slides and Slide Plates: MSS Type 35, including one of the following plate types:

   a. Plate: Unguided type.
   b. Plate: Guided type.
   c. Plate: Hold-down clamp type.

5. Pipe Saddle Supports: MSS Type 36, including steel pipe base support and cast iron floor flange.

6. Pipe Saddle Supports with U-Bolt: MSS Type 37, including steel pipe base support and cast iron floor flange.

7. Adjustable Pipe Saddle Supports: MSS Type 38, including steel pipe base support and cast iron floor flange.

8. Single Pipe Roller with Malleable Sockets: MSS Type 41.

9. Adjustable Roller Hangers: MSS Type 43.

10. Pipe Roll Stands: MSS Type 44.

11. Pipe Guides: Provide factory-fabricated guides of cast semi-steel or heavy fabricated steel, consisting of a bolted two-section outer cylinder and base with a two-section guiding spider bolted tight to pipe. Size guide and spiders to clear pipe and insulation (if any), and cylinder. Provide guides of length recommended by manufacturer to allow indicated travel.

C. Horizontal Cushioned Pipe Clamp: Where pipe hangers are called out to absorb vibration or shock install a piping clamp with thermoplastic elastomer insert. Cush-A-Clamp or equal.

D. Vertical Piping Clamps: Provide factory-fabricated two-bolt vertical piping riser clamps, MSS Type 8.

E. Hanger-Rod Attachments: Except as otherwise indicated, provide factory-fabricated hanger-rod attachments of one of the following MSS types listed.

1. Steel Turnbuckles: MSS Type 13.

2. Steel Clevises: MSS Type 14.

3. Swivel Turnbuckles: MSS Type 15.

4. Malleable Iron Eye Sockets: MSS Type 16.

5. Steel Weldless Eye Nuts: MSS Type 17.

F. Building Attachments: Except as otherwise indicated, provide factory-fabricated building attachments of one of the following types listed.

1. Concrete Inserts: MSS Type 18 or Blue Banger Hanger by Simpson

2. Steel Brackets: One of the following for indicated loading:

   a. Light Duty: MSS Type 31.
   b. Medium Duty: MSS Type 32.
   c. Heavy Duty: MSS Type 33.

3. Horizontal Travelers: MSS Type 58.

4. Internally Threaded Expansion Shell Anchors: By Simpson or approved equal.

5. Concrete Screw Anchors: Titen HD by Simpson or approved equal.

G. Saddles and Shields: Except as otherwise indicated, provide saddles or shields under piping hangers and supports, factory-fabricated, for all insulated piping. Size saddles and shields for exact fit to mate with pipe insulation.

1. Pipe Covering Protection Saddles: MSS Type 39; fill interior voids with segments of insulation matching adjoining insulation.

2. Insulation Protection Shields: MSS Type 40, 18” minimum, or of the length recommended by manufacturer to prevent crushing of insulation. High-density insulation insert lengths shall match or exceed shield length.

3. Thermal Hanger Shields: Constructed of 360° insert of waterproofed calcium silicate (60 psi flexural strength minimum) encased in 360° sheet metal shield. Provide assembly of same thickness as adjoining insulation. Shield length shall match or exceed length of calcium silicate insert. Alternately Polyisocyanurate Urethane with a minimum flexural strength of 60psi, fully encased in 360 PVC (1.524 mm thick)SNAPPITZ. Provide assembly of same thickness as adjoining insulation.

4. Thermal Hanger Couplings: Constructed of high strength plastic coupling to retain tubing and join insulation at clevis hangers and strut-mounted clamps. Klo-Shure Insulation Coupling or equal.

H. Miscellaneous Materials:

1. Metal Framing: Provide products complying with NEMA STD ML1.

2. Steel Plates, Shapes, and Bars: Provide products complying with ASTM A36.

3. Cement Grout: Portland Cement (ASTM C150, Type I or Type III) and clean uniformly graded, natural sand (ASTM C404, Size No. 2). Mix at a ratio of 1.0 part cement to 3.0 parts sand by volume, with minimum amount of water required for placement and hydration.

4. Heavy-Duty Steel Trapezes: Fabricate from steel shapes selected for loads required. Weld steel in accordance with AWS standards.

5. Pipe Brackets: "HoldRite" copper plated brackets. Insulate brackets attached to metal studs with felt.

2.03 PIPE PORTALS

A. Where pipe portals are not provided by other sections of Specification, provide prefabricated insulated pipe portals as required for piping penetrating through the roof where shown on plans. Field built pipe portals are acceptable alternatives - provide detail of construction for review.

B. Standard pipe portals, unless otherwise noted, shall be constructed as follows:

1. Curb shall be constructed of heavy gauge galvanized steel with continuous welds on shell seams.

2. Insulation to be 1-½” thick, 3 lb density rigid fiberglass.

3. Curb to have a raised 3” (minimum), 45° cant.

4. Curb to have 1-1/2" x 1-1/2" wood nailer (minimum).

5. Curb height to be 8” (minimum) above roof deck.

6. Cant shall be raised to match roof insulation thickness.

7. Cover or flashing to be constructed of galvanized steel or other suitable material to provide sturdy weather tight closure. Provide collars and rubber nipples with draw bands of sizes required by piping. Size curb, cover and nipples per manufacturer's recommendations.

8. Manufacturer: Roof Products Systems or Pate.

2.04 EQUIPMENT/PIPING RAILS

A. Where equipment/pipe rails are not provided by other sections of Specification, provide prefabricated reinforced equipment rails as required for support of equipment and piping. Field built curbs are acceptable alternatives - provide detail of construction for review.

B. Standard equipment rail, unless otherwise noted, shall be constructed as follows:

1. Construct of heavy gauge galvanized steel with continuous welds on shell seams.

2. Provide internal reinforcing supports welded as required to meet application requirements.

3. Equipment rails to have raised 3” (minimum), 45° cant.

4. Equipment rails to have 1 1/2" x 1 1/2" wood nailer (minimum) and counterflashing.

5. Equipment rail height to be 6” (minimum) above roof deck.

6. Cant shall be raised to match roof insulation thickness.

C. Equipment rails to be constructed to meet equipment size and weight requirements. Provide tapered rails to match roof pitch where required.

D. Manufacturer: Pate, Vent Products, Thy Curb or Roof Products Systems.

2.05 ACCESS PANELS AND ACCESS DOORS

A. Provide all access doors and panels to serve equipment under this work, including those which must be installed, in finished architectural surfaces. Frame of 16-gauge steel, door of 20 gauge steel. 1” flange width, continuous piano hinge, key operated, prime coated. Refer to Architectural Specifications for the required product Specification for each surface. Contractor is to submit schedule of access panels for approval. Exact size, number and location of access panels is not shown on Plans. Access doors shall be of a size to permit removal of equipment for servicing. Access door shall have same rating as the wall or ceiling in which it is mounted. Provide access panel for each trap primer or concealed valve. Use no panel smaller than 12" x 12” for simple manual access, or smaller than 24" x 24" where personnel must pass through. Provide cylinder lock for access door serving mixing or critical valves in public areas.

B. Included under this work is the responsibility for verifying the exact location and type of each access panel or door required to serve equipment under this work and in the proper sequence to keep in tune with construction and with prior approval of the Architect. Access doors in fire rated partitions and ceilings shall carry all label ratings as required to maintain the rating of the rated assembly.

C. Acceptable Manufacturers: Milcor, Karp, Nystrom, or Elmdor/Stoneman.

D. Submit markup of architectural plans showing size and location of access panels required for equipment access for approval by Architect.

2.06 IDENTIFICATION MARKERS

A. Mechanical Identification Materials: Provide products of categories and types required for each application as referenced in other Division 22 Sections. Where more than single type is specified for application, selection is installer's option, but provide single selection for each product category. Stencils are not acceptable.

B. Plastic Pipe Markers:

1. Snap-On Type: Provide pre-printed, semi-rigid snap-on, color coded pipe markers, complying with ANSI A13.1.

2. Pressure Sensitive Type: Provide pre-printed, permanent adhesive, color coded, pressure sensitive vinyl pipe markers, complying with ANSI A13.1. Secure both ends of markers with color coded adhesive vinyl tape.

3. Insulation: Furnish 1” thick molded fiberglass insulation with jacket for each plastic pipe marker to be installed on uninsulated pipes subjected to fluid temperatures of 125°F (52°C) or greater. Cut length to extend 2” beyond each end of plastic pipe marker.

4. Arrows: Print each pipe marker with arrows indicating direction of flow, either integrally with piping system service lettering (to accommodate both directions), or as separate unit of plastic.

C. Underground-Type Plastic Line Markers: Provide 6” wide x 4 mils thick multi-ply tape, consisting of solid metallic foil core between 2 layers of plastic tape. Markers to be permanent, bright colored, continuous printed, intended for direct burial service.

D. Valve Tags:

1. Brass Valve Tags: Provide 1 1/2" diameter 19-gauge polished brass valve tags with stamp-engraved piping system abbreviation in 1/4” high letters and sequenced valve numbers 1/2” high, and with 5/32” hole for fastener. Fill tag engraving with black enamel.

2. Plastic Laminate Valve Tags: Provide 3/32” thick engraved plastic laminate valve tags, with piping system abbreviations in 1/4" high letters and sequenced valve number 1/2" high, and with 5/32” hole for fasteners.

3. Valve Tag Fasteners: Provide solid brass chain (wire link or beaded type), or solid brass S-hooks of the sizes required for proper attachment of tags to valves, and manufactured specifically for that purpose.

4. Access Panel Markers: Provide 1/16” thick engraved plastic laminate access panel markers, with abbreviations and numbers corresponding to concealed valve. Include 1/8” center hole to allow attachment.

5. Non-potable Water Tags: 1/16” thick, engraved, plastic tags as indicated on Drawings.

E. Plastic Equipment Signs:

1. Provide 4-1/2” x 6” plastic laminate sign, ANSI A.13 color coded with engraved white core lettering.

2. Fasteners: Self-tapping stainless steel screws, except contact-type permanent adhesive where screws cannot or should not penetrate the substrate.

3. Nomenclature: Include the following, matching terminology on schedules as closely as possible:

a. Name and plan number.
b. Equipment service.
c. Design capacity.
d. Other design parameters, such as pressure drop, entering and leaving conditions, rpm, etc.

F. Acceptable Manufacturers: Craftmark, Seton, Brady, Marking Services, Inc., or Brimar.

2.07 ELECTRICAL

A. General:

1. All electrical material, equipment, and apparatus specified herein shall conform to the requirements of Division 26.

2. Provide all motors for equipment specified herein. Provide motor starters, controllers, and other electrical apparatus and wiring which are required for the operation of the equipment specified herein.

3. Set and align all motors and drives in equipment specified herein.

4. Provide expanded metal or solid sheet metal guards on all V-belt drives to totally enclose the drive on all sides. Provide holes for tachometer readings. Support guards separately from rotating equipment.

5. Provide for all rotating shafts, couplings, etc., a solid sheet metal, inverted "U" cover over the entire length of the exposed shaft and support separately from rotating equipment. Cover shall extend to below the bottom of the shaft and coupling, and shall meet the requirements of the State Industrial Safety Regulations.

6. Specific electrical requirements (i.e., horsepower and electrical characteristics) for plumbing equipment are scheduled on the Drawings.

B. Quality Assurance:

1. Electrical components and materials shall be UL or ETL listed/labeled as suitable for location and use - no exceptions.

C. Disconnect Switches:

1. Fusible Switches: For equipment 1/2 HP or larger, provide fused, each phase; heavy duty; horsepower rated; spring loaded quick-make, quick-break mechanism; dead front line side shield; solderless lugs suitable for copper or aluminum conductors; spring reinforced fuse clips; electro silver plated current carrying parts; hinged doors; operating lever arranged for locking in the "OPEN" position; arc quenchers; capacity and characteristics as indicated.

2. Non-Fusible Switches: For equipment less than 1/2 horsepower, switch shall be horsepower rated; toggle switch type with thermal overload quantity of poles and voltage rating as required.

PART 3 - EXECUTION

3.01 GENERAL

A. Workmanship shall be performed by licensed journeymen or master mechanics and shall result in an installation consistent with the best practices of trades.

B. Install work uniform, level and plumb, in relationship to lines of building. Do not install any diagonal, or otherwise irregular work unless so indicated on Drawings or approved by Architect.

3.02 MANUFACTURER'S DIRECTIONS

A. Follow manufacturers' directions and recommendations in all cases where the manufacturers of articles used on this Contract furnish directions covering points not shown on the Drawings or covered in these Specifications.

3.03 INSTALLATION

A. Coordinate the work between the various Plumbing Sections and with the work specified under other Divisions. If any cooperative work must be altered due to lack of proper supervision or failure to make proper and timely provisions, the alternations shall be made to the satisfaction of the Engineer and at the Contractor’s cost.

B. Inspect all material, equipment, and apparatus upon delivery and do not install any damaged or defected materials.

3.04 SUPPORTS AND HANGERS

A. Prior to installation of hangers, supports, anchors, and associated work, installer shall meet at project site with Contractor, installer of each component of associated work, inspection and testing agency representatives, (if any), installers of other work with requirements specified.

B. Installation of Building Attachments: Install building attachments at required locations within concrete or on structural steel for proper piping support. Install additional building attachments where support is required for additional concentrated loads, including valves, flanges, guides, strainers, expansion joints, and at changes in direction of piping. Install concrete inserts before concrete is placed. Fasten insert securely to forms. Where concrete with compressive strength less than 2,500 psi is indicated, install reinforcing bars through opening at top of inserts.

C. Proceed with installation of hangers, supports, and anchors only after required building structural work has been completed in areas where the work is to be installed. Correct inadequacies including, but not limited to, proper placement of inserts, anchors, and other building structural attachments.

D. Install hangers, supports, clamps, and attachments to support piping properly from building structure. Arrange for grouping of parallel runs of horizontal piping to be supported together on trapeze type hangers where possible. Where piping of various sizes is to be supported together by trapeze hangers, space hangers for smallest pipe size or install intermediate supports for smaller diameter pipe. Do not use wire or perforated metal to support piping, and do not support piping from other piping.

E. Install hangers within 12 inches of every change in piping direction, end of pipe run or concentrated load, and within 36 inches of every major piece of equipment. Hangers shall be installed on both sides of flexible connections. Where flexible connection connects directly to a piece of equipment only one hanger is required.

F. Install hangers and supports complete with necessary inserts, bolts, rods, nuts, washers, and other accessories. Except as otherwise indicated for exposed continuous pipe runs, install hangers and supports of same type and style as installed for adjacent similar piping.

G. Support gas independently of other piping.

H. Prevent electrolysis in support of copper tubing by use of hangers and supports which are copper plated, or by other recognized industry methods.

I. Hanger Spacing in accordance with following minimum schedules (other spacings and rod sizes may be used in accordance with the SMACNA Seismic Restraint Manual using a safety factor of five):

1. Steel Pipe (Gas/Air Filled):

Pipe Size	Max. Hanger Spacing	Rod Size
1/2" to 1 1/4"	6 feet	3/8"
1 ½" and larger	10 feet	1/2"

2. Copper Pipe:

Pipe Size	Max. Hanger Spacing	Rod Size
1/2" to 2"	6 feet	3/8"
2 ½" and larger	8 feet	1/2"

J. Sloping, Air Venting, and Draining:

1. Slope all piping as specified and as indicated, true to line and grade, and free of traps and air pockets. Unless indicated otherwise, slope piping in the direction of flow as follows:

Service	Inclination	Slope
Domestic Water	Down	1" per 100'
Heating Water	Up	1" per 40'
Soil and Waste	Down	1/4" per foot (1/8" per foot)
Storm Water	Down	1/4" per foot (1/8" per foot)
Sanitary Vent	Up (towards roof terminal)	1/4" per foot (1/8" per foot)

2. Provide eccentric reducers in horizontal piping for all sizing changes.

3. Provide drain valves and hose adapters at all low points in piping.

4. Provide vents at all high points in water piping.

K. Provisions for Movement:

1. Install hangers and supports to allow controlled movement of piping systems and to permit freedom of movement between pipe anchors, and to facilitate action of expansion joints, expansion loops, expansion bends, and similar units.

2. Load Distribution: Install hangers and supports so that piping live and dead loading and stresses from movement will not be transmitted to connecting equipment.

3. Insulated Piping: Comply with the following installation requirements:

   a. Clamps: Attach clamps, including spacers, (if any), to piping with clamps projecting through insulation.
   b. Shields: Where low compressive strength insulation or vapor barriers are indicated on cold water piping, install shields or inserts.
   c. Saddles: Where insulation without vapor barrier is indicated install protection saddles.

L. Installation of Anchors:

1. Install anchors at proper locations to prevent excessive stresses and to prevent transfer of loading and stresses to connected equipment.

2. Fabricate and install anchor by welding steel shapes, plates and bars to piping and to structure.

3. Where expansion compensators are indicated, install anchors in accordance with expansion unit manufacturer's written instructions, to limit movement of piping and forces to maximums recommended by manufacturer for each unit.

4. Anchor Spacings: Where not otherwise indicated, install anchors at ends of principal pipe runs, at intermediate points in pipe runs between expansion loops and bends.

M. Equipment Supports:

1. Provide all concrete bases, unless otherwise furnished as work of Division 03. Furnish to Division 03 Contractor scaled layouts of all required bases, with dimensions of bases, and

location to column centerlines. Furnish templates, anchor bolts, and accessories necessary for base construction.

2. Provide structural steel stands to support equipment not floor mounted or hung from structure. Construct of structural steel members or steel pipe and fittings. Provide factory-fabricated tank saddles for tanks.

N. Adjusting:

1. Hanger Adjustment: Adjust hangers so as to distribute loads equally on attachments.

2. Support Adjustment: Provide grout under supports so as to bring piping and equipment to proper level and elevations.

3. Clean factory-finished surfaces. Repair any marred or scratched surfaces with manufacturer's touch-up paint.

3.05 ROOF CURBS, EQUIPMENT RAILS, PIPE PORTALS

A. Install per manufacturer's instructions.

B. Coordinate with other trades so units are installed when roofing is being installed.

C. Verify roof insulation thickness and adjust raise of cant to match.

3.06 ELECTRICAL REQUIREMENTS

A. Plumbing Contractor shall coordinate with Division 26 work to provide complete systems as required to operate all mechanical devices installed under this Division of work.

B. Installation of Electrical Connections: Furnish, install, and wire (except as may be otherwise indicated) all plumbing, motors and controls in accordance with the following schedule and in accordance with equipment manufacturer’s written instructions and with recognized industry practices, and complying with applicable requirements of UL, NEC, and NECA’s “Standard of Installation” to ensure that products fulfill requirements. Carefully coordinate with work performed under the Mechanical Division of these Specifications.

C. Division 22 has responsibilities for electrically powered or controlled plumbing equipment, which is specified in Division 22 Specifications or scheduled on Division 22 Drawings. The specific division of responsibilities between Division 22 and 26 for furnishing or wiring this equipment is as follows:

1. Division 22 Mechanical Responsibilities:

a. MOTORS: Furnish and install all motors necessary for plumbing equipment.
b. MAGNETIC STARTERS: Furnish all magnetic starters whether manually or automatically controlled which are necessary for mechanical equipment. Furnish these starters with all control relays or transformers necessary to interface with plumbing controls. If the starter is factory installed on a piece of Division 22 equipment, also furnish and install the power wiring between starter and motor.
c. VARIABLE FREQUENCY DRIVES: Provide all VFD’s associated with plumbing equipment. If the drive is installed on a piece of factory assembled equipment the wiring between motor and drive is to be provided as part of the factory equipment.
d. DISCONNECTS: Provide the disconnects which are part of factory wired Division 22

plumbing equipment. Factory wiring to include wiring between motor and disconnect or combination starter/disconnect.

e. CONTROLS: Division 22 Contractor is responsible for the following equipment in its entirety. This equipment includes but is not limited to the following:
   1) Control relays necessary for controlling Division 22 equipment.
   2) Control transformers necessary for providing power to controls for Division 22 equipment.
   3) Low or non-load voltage control components.
   4) Non-life safety related valve.
   5) Float switches.
   6) Solenoid valves, EP and PE switches.

D. Division 26 has responsibilities for electrically powered or controlled equipment which is specified in Division 22 Specifications or scheduled on Division 22 Drawings. The specific division of responsibilities between Division 22 and 26 for furnishing or wiring this equipment is as follows:

1. Division 26 Electrical Responsibilities:

   a. MOTORS: Provide the power wiring for the motors.
   b. MAGNETIC STARTERS: Except where magnetic starters are factory installed on Division 22 factory assembled equipment, Division 26 is to install magnetic starters furnished by Division 22 and install the necessary power wiring to the starter and from the starter to the motor. In the case of factory installed starters, Division 26 is to install the necessary power wiring to the starter.
   c. VARIABLE FREQUENCY DRIVES: Physically mount all VFD's, which are not specified to be installed on Division 22 factory assembled equipment. Provide the necessary power wiring to the VFD and from the VFD to the motor except in the case of factory installed VFD's where wiring between the motor and VFD is to be by Division 22. Where disconnects are installed between a VFD and a motor provide the interlocking wiring between the disconnect and VFD to insure that the drive is shutdown simultaneously with motor.
   d. DISCONNECTS: Provide all disconnects necessary for Division 22 mechanical equipment which are not provided as part of factory wired Division 22 equipment. Provide power wiring to all disconnects. In addition provide power wiring between motor and disconnect when the disconnect is not factory installed. See also Variable Frequency Drive above for special wiring requirements.
   e. CONTROLS: Division 26 Contractor is responsible for providing power to control panels and control circuit outlets.

2. Coordinate with other work, including wires/cables, raceway and equipment installation, as necessary to properly interface installation of electrical connections for equipment with other work.

3. Connect electrical power supply conductors to equipment conductors in accordance with equipment manufacturer's written instructions and wiring diagrams. Mate and match conductors of electrical connections for proper interface between electrical power supplies and installed equipment.

4. Maintain existing electrical service and feeders to occupied areas and operational facilities, unless otherwise indicated, or when authorized otherwise in writing by Owner, or Architect/Engineer. Provide temporary service during interruptions to existing facilities. When necessary, schedule momentary outages for replacing existing wiring systems with new wiring systems. When that "cutting-over" has been successfully accomplished, remove, relocate, or abandon existing wiring as indicated.

5. Cover splices with electrical insulating material equivalent to, or of greater insulation resistivity rating, than electrical insulation rating of those conductors being spliced.

6. Prepare cables and wires, by cutting and stripping covering armor, jacket, and insulation properly to ensure uniform and neat appearance where cables and wires are terminated. Exercise care to avoid cutting through tapes which will remain on conductors. Also avoid “ringing” copper conductors while skinning wire.

E. Motors and Motor Control Equipment: Conform to the standards of the NEMA. Equip motors with magnetic or manual line starters with overload protection. Motor starters and line voltage controls shall be installed under Electrical Section but located and coordinated as required under this Section of the work. Starters shall be combination type with non-fusible disconnect switches. All single phase fractional horsepower motors shall have built-in overload protection.

3.07 PAINTING

A. All painting shall be provided under this Division work, unless otherwise specified under Section 099100: Painting. Painting schemes shall comply with ANSI A13.1. Paint all exposed materials such as piping, equipment, insulation, steel, etc. Exposed gas piping inside and outside the building shall be painted with two coats of "Rust-O-Leum" Yellow. Exposed copper indirect waste piping serving food service equipment shall be painted metallic chrome.

B. All exposed work under Division 22 shall receive either a factory finish or a field prime coat finish, except:

1. Exposed copper piping.

2. Aluminum jacketed outdoor insulated piping.

3.08 IDENTIFICATION MARKERS

A. General: Where identification is to be applied to surfaces which require insulation, painting, or other covering or finish, including valve tags in finished mechanical spaces, install identification after completion of covering and painting. Install identification prior to installation of acoustical ceilings and similar removable concealment.

B. Piping System Identification:

1. Install pipe markers on each system indicated to receive identification, and include arrows to show normal direction of flow.

2. Locate pipe markers as follows:

a. Near each valve and control device.
b. Near each branch, excluding short take-offs for fixtures mark each pipe at branch, where there could be question of flow pattern.
c. Near locations where pipes pass through walls or floors/ceilings, or enter non-accessible enclosures.
d. At access doors, manholes, and similar access points which permit view of concealed piping.
e. Near major equipment items and other points of origination and termination.
f. Spaced horizontally at maximum spacing of 20' along each piping run, with minimum of one in each room. Vertically spaced at each story transversed.

C. Underground Piping Identification: During backfilling/topsoiling of each exterior underground piping system, install continuous underground-type plastic line marker, located directly over buried line at 6” to 8” below finished grade. Where multiple small lines are buried in common trench and do not exceed overall width of 16”, install single line marker.

D. Plumbing Equipment Identification: Locate engraved plastic laminate signs on or near each major item of plumbing equipment and each operational device. Provide signs for the following:

1. Main control and operating valves, including safety devices.

2. Meters, gauges, thermometers, and similar units.

3. Pumps, compressors, and similar motor-driven units.

4. Strainers, filters, treatment systems and similar equipment.

E. Text of Signs: In addition to name of identified unit, provide lettering to distinguish between multiple units, inform operator of operational requirements, indicate safety and emergency precautions, and warn of hazards and improper operations. Equipment signs shall include an identification of the area or other equipment served by the equipment being labeled.

F. Gas pressure regulators shall have metal tags attached stating, "Warning: <<2>> lbs. upstream natural gas pressure. Do not remove."

3.09 VIBRATION AND DYNAMIC BALANCING

A. Vibration tolerances shall be as specified by the "International Research and Development Corporation", Worthington, Ohio, measured by the displacement, peak to peak, as follows:

1. Pump and Electric Motors: Below severity chart labeled "SLIGHTLY ROUGH", maximum vibration velocity of 0.157 in/sec, peak.

2. Compressors: Same as pumps.

B. Correction shall be made to all equipment which exceeds vibration tolerances specified above. Final vibration levels shall be reported as described above.

3.10 TESTING

A. Provide all tests specified hereinafter and as otherwise required. Provide all test equipment, including test pumps, gauges, instruments, and other equipment required. Test all rotational equipment for proper direction of rotation. Upon completion of testing, certify to the Architect, in writing, that the specified tests have been performed and that the installation complies with the specified requirements and provide a report of the test observations signed by qualified inspector.

END OF SECTION

SECTION 220501

PLUMBING

PART 1 - GENERAL

1.01 APPLICABLE REQUIREMENTS

A. All work to be furnished and installed under this section shall comply with all the requirements of General Conditions, Supplemental Conditions, Division 01 - General Requirements, and Section 220500 - Basic Materials and Methods, and other Sections in Division 22 specified herein.

1.02 RELATED WORK SPECIFIED ELSEWHERE

A. Section 220500: Basic Materials and Methods

B. Section 220700: Plumbing Insulation

C. Section 221123: Plumbing Equipment.

D. Section 222113: Plumbing Piping.

E. Section 222113: Pumps and Specialties

F. Section 224000: Plumbing Fixtures

1.03 SCOPE

A. All work includes removing and modifying existing and providing new plumbing. Systems as specified under this section shall include but not necessarily be limited to the following:

1. Connection to utilities at five (5) feet from the building. Coordinate with the Civil Engineering Plans and/or Division 02 work.

2. Connection of all waste, vent, and water piping to all plumbing fixtures, drinking fountains, sinks, electric water coolers, drains and mechanical equipment.

3. Provide for future expansion as indicated.

4. Connect to new mechanical equipment including chiller, cooling tower expansion tanks, domestic hot water heaters, and boilers, etc.

5. Connect hot and/or cold water to hose bibbs and wall hydrants. Provide individual shut-off valves at each location.

6. Provide traps on all floor drains with trap primer where specified. Pipe to trap shall be ½" minimum.

7. 100°F hot water shall be mixed at point of use for service to public fixtures including lavatories.

8. Domestic water heating plant shall be gas supply.

9. Provide domestic hot water recirculation system. Each branch line to be set at one (1) gpm. Provide individual shut-off valve, check valve and Circuit Setter ball valve with memory stop at each location.

10. Provide floor drainage in core toilets, mechanical rooms and equipment rooms.

11. Provide connections for all area drains, catch basins, downspouts, roof drains and overflow drains to storm sewer system.

12. Contractor to start gas system at discharge flange of meter setting assembly.

13. Provide gas shut-off and regulator assembly at each connection, as detailed on drawings. Supply to any piece of equipment shall not exceed 0.5 psi.

14. Temporary Water Service: As directed by the General Contractor, the plumber shall provide a temporary metered water service and temporary water risers with four (4) hose bibbs installed at each level as the building proceeds upwards to the roof.

1.04 SUBMITTALS

A. Prior to construction submit for approval all materials and equipment in accordance with Division 01. Submit manufacturer's data, installation instructions, and maintenance and operating instructions for all components of this section including, but not limited to, the following:

1. Plumbing specialties.

2. Trap primers.

3. Cleanouts.

4. Drains

5. Roof flashing

6. Wall hydrants and hose bibbs

7. Mixing valves

1.05 DELIVERY, STORAGE, AND HANDLING

A. Deliver products to the site in containers with manufacturer's stamp or label affixed.

B. Store and protect products against dirt, water, chemical, and mechanical damage. Do not install damaged products - remove from project site.

1.06 WARRANTY

A. Provide one-year (12 months) warranty. The warranty shall include parts, labor, travel costs, and living expenses incurred by the manufacturer to provide factory authorized service.

PART 2 - PRODUCTS

2.01 GENERAL

A. All materials and equipment under this Division of the Specifications shall be new, of best grade and as listed in printed catalogs of the manufacturer.

B. All manufactured materials shall be delivered and stored in their original containers. Equipment shall be clearly marked or stamped with the manufacturer's name and rating.

C. The following products to be included as part of this work but specified under Section 220500 Basic Materials and Methods, Section 222113 Plumbing Piping and Section 222123 Pumps and Specialties:

1. Piping.

2. Valves.

3. Hangers and supports.

4. Escutcheon plates, flashings, and sleeves.

5. Identification markers and signs.

6. Anchors and alignment guides.

7. Excavation and backfill.

8. Pressure and temperature gauges.

9. Access Panels.

D. Plumbing Fixtures: Refer to Section 224000.

E. Plumbing Equipment: Refer to Section 221123.

F. Products made of, or containing, lead, asbestos, mercury, or other known toxic or hazardous materials are not acceptable for installation under this Section. Any such products installed as part of the work of this Section shall be removed and replaced and all costs for removal and replacement shall be borne solely by the Contractor(s).

2.02 VALVES: DOMESTIC WATER AND NATURAL GAS (SEE SECTION 222113)

2.03 CLEANOUTS

A. Cleanout Plugs: Bronze, taper thread countersunk head.

B. Floor Cleanouts: Service weight cast-iron body and frame, flange with flashing clamp, adjustable cast-iron collar, caulk inside, Ty-seal or No-hub joints, neoprene plug gasket seal.

1. Carpeted Areas: Zurn ZN-1400-KC-VP-BP-CM or J. R. Smith 4028 C - F- C - Y - U

2. Tiled Areas: Zurn ZN-1400-X-KC-VP-BP or J.R. Smith 4148 - F - C - U

3. Unfinished Areas: Zurn ZN-1400-HD-KC-VP-BP or J.R. Smith 4108 C - F - C - U

4. Yard Areas: Zurn Z 1474-IN-VP or J.R. Smith 4258 - C - U

C. Cleanout Tee: Cast iron cleanout tee with countersunk brass plug, neoprene plug gasket seal and smooth stainless steel cover.

1. Manufacturer: Zurn Z-1446-BP or J. R. Smith 4532 S (Y)

2.04 ROOF FLASHING

A. Flashing: Unless indicated otherwise on the drawings flashings for pipes through the roof shall be galvanized sheet metal, 24 gauge minimum or sheet copper, 8 oz. per sq. ft. minimum with seams and joints lapped and soldered watertight. Coordinate with Architectural Sections for flashings and roofing.

B. Vent Pipes: Provide caulk type, vandalproof hood with Allen head vandal proof screws for all vent pipes through roof or preformed vinyl/galvanized steel assembly.

2.05 WATER HAMMER ARRESTORS

A. Piston Type: Hard drawn copper construction, mirror finished internal surfaces; machine finished brass piston, air charged, 250 psi rated, tested and certified per PDI WH-201 and ASSE 1015. Coordinate location of access panels with Architect or provide access panel where none are shown.

1. Manufacturer: Watts Series 15, Precision Plumbing series SC, or Sioux Chief.

2.06 ANTI-CONTAMINATION WALL HYDRANTS AND HOSE BIBBS

A. Anti-contamination Hose Bibbs, HB-1: Bronze body construction, polished chrome plated finish, renewable composition disc, wheel handle, ½" NPT inlet, 3/4" threaded hose end, vacuum breaker/backflow preventor, solder joint, ANSI 1011.

1. Manufacturer: Woodford series 24P or Zurn Z1341.

B. Anti-contamination Hose Bibbs: Toilet Rooms, HB-2: Stainless steel recessed hose box with door and lock, cast bronze valves with integral stops, 3/4"H & CW outlet with vacuum breakers.

1. Manufacturer: Acorn 8000 or Willoughby HB-2.

2.07 DRAINS

A. General: Provide drains of type and size as indicated on drawings, including features, as specified herein.

1. Acceptable Manufacturers: J.R. Smith, Zurn, Wade, Sioux Chief, Josam and Watts.

B. Floor Drain, FD-1 - Finished Areas: Enamel coated cast iron body with flange, integral reversible clamping collar, seepage openings, adjustable round satin nickel bronze strainer, sediment bucket, bottom outlet, caulk inside or Ty-Seal or no-hub joint. Provide trap primer.

1. Manufacturer: Zurn ZN-415-5B-Y-P or J.R. Smith 2010 - A - C(Y).

C. Floor Drain, FD-2 - Mechanical Rooms: Enamel coated cast iron body with flange, clamping collar, seepage openings, 8-1/2" diameter adjustable cast iron bar strainer, sediment bucket, bottom outlet, caulk inside or Ty-Seal or no-hub joint. Provide trap primer.

1. Manufacturer: Zurn Z-520-Y-P or J.R. Smith 2350 C(Y).

2.08 TRAP PRIMER

A. Cast bronze construction, vacuum breaker, ½" sweat solder connection. Install in accessible location or provide access panel.

1. Manufacturer: PPP Oregon #1 or E&S, for use for up to 8 drains using PPP trap primer distribution units.
2. Manufacturer: PPP Prime-Pro flow activated trap primer PR01-500.

B. For Multiple Units or Kitchen Areas: PPP Prime Time electronic trap primer Series PT. Coordinate 120 V, electrical service with Division 26.

PART 3 - EXECUTION

3.01 GENERAL

A. This system to be installed by an experienced firm regularly engaged in the installation of plumbing systems as specified by the requirements of the Specifications.

B. Install all items specified in this section of the Specification under the full purview of local and state governing agencies.

C. Refer to Section 220500: General Plumbing Requirements for installation of piping, valves and other requirements.

3.02 PERFORMANCE OF WORK

A. Examine areas, physical conditions and phasing requirements under which materials are to be installed. Layout the system to suit the different types of construction and equipment as indicated on the drawings.

B. Work shall start immediately after authorization has been given to proceed so that the overall progress of the construction is not delayed. No foundry items to be installed until submittals have been approved.

C. Coordinate with other trades as necessary to properly interface components of the plumbing system.

D. Follow manufacturer's directions and recommendations in all cases where the manufacturers of articles used on this Contract furnish directions covering points not shown on the drawings or covered in these Specifications.

E. The omission from the drawings or Specifications of any details of construction, installation, materials, or essential specialties shall not relieve the Contractor from furnishing the same in place for a complete system.

3.03 PIPING INSTALLATION

A. The word “piping” shall mean all pipes, fittings, nipples, valves and all accessories connected thereto.

B. Run piping generally parallel to the axis of the building, arranged to conform to the building requirements and to suit the necessities of clearance for other mechanical ducts flues, conduits and work of other trades and close to ceiling or other construction as practical, free of unnecessary traps or bends.

C. Run horizontal sanitary drainage at uniform pitch of not less than 1/8" per foot, unless otherwise indicated. Pitch horizontal vent piping downward from stack to fixtures.

D. Run drainage piping as straight as possible with long radius turns. Offsets shall be made at an angle of 45° or less.

E. Grade water supply piping for complete drainage of the system. Install hose bibbs at low points.

F. Piping connections to all equipment shall be made up with unions.

G. Provide sufficient elbows, swings and offsets to permit free expansion and contraction.

H. Use reducers or increasers. Use no bushings.

I. Ream or file each pipe to remove burrs. Inspect each length of pipe and each fitting for workmanship and clear passageway.

J. Vent pipes to terminate at least 6" above the roof. Provide vandal proof hood assembly.

K. Cover, cap or otherwise protect open ends of all piping during construction to prevent damage to threads or flanges and prevent entry of foreign matter. Disinfect water supply piping as specified.

L. Exposed connections to equipment shall be installed with special care, showing no tool marks or threads at fittings and piping. No bowed or bend piping to be permitted.

M. All ferrous to non-ferrous connections shall be made by means of dielectric fittings. Submit shop drawings for approval.

N. Use extra heavy pipe for nipples, where unthreaded portion is less than 1½”. Use no close nipples. Use only shoulder nipples.

O. All piping shall be inspected for defects and flaws prior to installation. Remove any damaged piping from job site. Piping shall be thoroughly cleaned of dirt, debris or rust.

P. Cleanouts to be provided at each change in direction greater than 135° or 100' maximum intervals on underground piping.

Q. Cleanouts to be same size as pipe except cleanout plugs larger than 4" shall not be required.

R. Cleanouts on concealed piping to be extended through and terminate flush with the finished wall or floor. Cover plates to be provided on all cleanout plugs in finished areas.

S. The bodies of cleanout ferrules to conform in thickness to that required for pipe and fittings of the same metal.

T. Route piping on roof on manufactured polypropylene pipe supports: Roof Top Blox RTB-#.

3.04 WATER HAMMER ARRESTERS

A. Install as per PDI Standard WH-20 and equipment manufacturer's recommendation and as shown on working drawings. Provide before each quick closing valve (flush valve, solenoid valve, etc.) or bank of fixtures.

B. Install at each plumbing fixture, bank of fixtures, equipment and as indicated.

3.05 TESTING AND DISINFECTING - PLUMBING SYSTEMS

A. General: The Contractor to perform all field tests and provide all labor, equipment, and incidentals required for the tests. Owner to witness all field tests and conduct all field inspections. The Contractor to give the Owner ample notice of the dates and times scheduled for tests. Any deficiencies to be completely retested at no additional cost.

1. Inspection: Inspection to continue during installation and testing. Perform a final inspection of the equipment prior to installation to determine conformity to the type, class, grade, size, capacity, and other characteristics specified herein or indicated. Correct or replace all rejected equipment prior to installation.

2. Water Distribution Piping Test: Before fixtures are set, subject the entire hot and cold piping system to a hydrostatic pressure test of 150 pounds per square inch with water for not less than 8 hours in order to permit inspection of all joints with no evidence of leakage. Where a portion of the water distribution piping is to be concealed before completion, test this portion separately as specified for the entire system.

3. Sanitary, Waste, Storm, Rainwater, and Vent Piping Test: Before the installation of any fixtures or drains, cap the ends of the system and fill all lines with water to the roof level and allow to stand for at least 30 minutes without leakage. Make tests within building with piping exposed. If the system is tested in sections, tightly lug each opening, except the highest opening of the section under test, and fill each section with water and test with at least a 10' head of water.

4. Sanitary Drainage Vent, Storm, Rainwater and Fixture System Final Test: Give sanitary, drainage vent, and fixture systems an in-service test after complete installation. After all fixtures are installed, test the entire vent and sewer system and prove gas and water tight. Final test shall be with air. Before proceeding with test, fill all traps with water. Close all stacks and line openings during test, for a minimum period of 24 hours. If test reveals leakage of air at any point, repair and retest the system.

5. Disinfection of Water Distribution System: After pressure tests have been made thoroughly flush the entire domestic water distribution system with water until all entrained dirt and mud have been removed, and sterilize by chlorinating material. The chlorinating material shall be liquid chlorine. The chlorinating material shall provide a dosage of not less than 50 parts per

million and shall be introduced into the system or part thereof in an approved manner. Retain the treated water in the pipe for 24 hours, or, fill the system or part thereof with a water-chlorine solution containing at least 200 parts per million of chlorine and allow to stand for three hours. Open and close all valves in the system being disinfected three times during the contact period. Then flush the system with clean potable water until the residual chlorine is reduced to less than 1.0 ppm. During the flushing period open and close all valves and faucets three times. From at least three divergent points in the system, take samples of water in properly sterilized containers for bacterial examination. Repeat the disinfecting until tests indicate that satisfactory bacteriological results have been obtained.

a. Taking of samples shall be witnessed by Architect or Owner's representative. Samples are to be taken and tested by an independent analytical testing laboratory. Written reports shall be supplied to Architect for approval.

3.06 OPERATING TESTING AND CERTIFICATION - PLUMBING SYSTEMS

A. Upon completion and disinfection, and prior to acceptance of the installation, the Contractor to subject the plumbing system to operating tests to demonstrate satisfactory, functional, and operating efficiency. Such operating tests to include the following information in a report with conclusions as to the adequacy of the system.

1. Time, date, and duration of tests.

2. Water pressures at most remote location.

3. Operation of all valves and hydrants.

4. Operation of all floor drains by flooding with water.

5. Quality of domestic water.

6. Read all indicating instruments at half-hour intervals unless otherwise directed. Supply four copies of the test report to the Owner.

3.07 CLEANING EQUIPMENT AND MATERIALS

A. In addition to the requirements of Section 220500, provide for the safety and good condition of all materials and equipment until final acceptance by the Owner. Protect all materials and equipment from damage. Provide adequate and proper storage facilities during the progress of the work. Special care to be taken to provide protection for bearings, open connections, pipe coils, pumps, compressors, and similar equipment.

B. All piping, finished surfaces, and equipment to have all grease, adhesive labels, and foreign materials removed.

C. All piping to be drained and flushed to remove grease and foreign matter. Pressure regulating assemblies, traps, flush valves, and similar items shall be thoroughly cleaned. Remove and thoroughly clean and reinstall all liquid strainer screens after the system has been in operation for ten days.

D. When connections are to be made to existing systems, the Contractor is to do all cleaning and purging of the existing systems required to restore them to the condition existing prior to the start of work.

3.08 OPERATION MANUALS, START-UP SERVICE, WARRANTIES, ACCEPTANCE AND GUARANTEES

A. General: Refer to Section 220500 for details.

END OF SECTION

SECTION 220700

PLUMBING INSULATION

PART 1 - GENERAL

1.01 APPLICABLE REQUIREMENTS

A. All work to be furnished and installed under this section shall comply with all the requirements of General Conditions, Supplemental Conditions, Division 01 - General Requirements, and Section 220500 - Basic Materials and Methods, and other Sections in Division 22 specified herein.

1.02 SCOPE

A. All work to be furnished and installed under this Section shall include, but not necessarily be limited to, providing insulation for the following:

1. Piping:

a. Domestic hot water supply and return.
b. Horizontal roof and overflow drain piping.
c. Sanitary vent piping in unheated spaces.
d. Drains from electric water coolers to first connection.
e. Horizontal pipe runs from fixtures receiving cold condensate.
f. All valves, separators, strainers and fittings for systems listed above.

2. Hot and Cold Equipment:

a. Hot water storage tanks.

3. Drains:

a. All roof and overflow drain bodies.

B. Types of mechanical insulation specified in this Section include the following:

1. Fiberglass pipe insulation.

2. Flexible elastomeric closed cell insulation

3. Insulation jackets.

4. Insulation accessories.

1.03 RELATED WORK SPECIFIED ELSEWHERE

A. Section 220500: Basic Materials and Methods.

B. Section 220501: Plumbing.

C. Section 221123: Plumbing Equipment.

D. Section 222113: Plumbing Piping, valves and specialties.

E. Section 222123: Pumps and Specialties.

F. Section 224000: Plumbing Fixtures.

1.04 DEFINITIONS

A. Ambient: The air temperature to be maintained in a conditioned room. Typically between 70°F and 78°F.

B. Insert: Spacer placed between the pipe support system and the piping to allow for the space required for insulation.

C. Insulation Group (IG): Definition of Insulation Materials and Operating Temperatures.

D. Insulation Shield: Buffer material placed between the pipe support system and the insulation to prevent the insulation material from crushing.

E. Jacket: Protective covering over the pipe insulation; may be factory applied such as “all service jacket” or field applied to provide additional protection; of such materials as canvas, PVC, aluminum or stainless steel.

F. Piping Insulation: Thermal insulation applied to prevent heat transmission to or from a piping system.

G. Vapor Barrier Jacket: Insulation jacket material that impedes the transmission of water vapor.

H. Freezing Climate: Where outdoor design temperature is less than 33° F, as stated in ASHRAE fundamentals under 99% column for winter design conditions.

1.05 QUALITY ASSURANCE

A. Codes and Standards: Provide products conforming to the requirements of the following:

1. American Society for Testing and Materials (ASTM): Manufacture and test insulation in accordance with the ASTM Standards, including:

a. B209 - Specification for Aluminum and Aluminum-Alloy Sheet and Plat.
b. C165 - Recommended Practice for Measuring Compressive Properties of Thermal Insulation.
c. C167 - Test Methods for Thickness and Density of Blanket or Batt Thermal Insulations.
d. C177 - Test Method for Steady-State Heat Flux Measurements and Thermal Transmission.
e. Properties by Means of the Guarded-Hot-Plate Apparatus.
f. C195 - Specification for Mineral Fiber Thermal Insulating Cement.
g. C196 - Specification for Expanded or Exfoliated Vermiculite Thermal Insulating Cement.
h. C302 - Test Method for Density of Preformed Pipe-Covering-Type Thermal Insulation.
i. C303 - Test Method for Density of Preformed Block-Type Thermal Insulation.

j. C305 - Test for Thermal Conductivity of Pipe Insulation.
k. C356 - Test for Linear Shrinkage of Preformed High-Temperature Thermal Insulation.
l. C411 - Test for Hot-Surface Performance of High Temperature Thermal Insulation.
m. C423 – Standard Test Method for Sound Absorption and Sound Absorption Coefficients by the Reverberation Room Method.
n. C449 - Specification of Mineral Fiber Hydraulic-Setting Thermal Insulating and Finishing Cement.
o. C518 – Standard Test Method for Steady-State Thermal Transmission Properties by Means of the Heat Flow Meter Apparatus.
p. C533 - Specification for Calcium Silicate Block and Pipe Thermal Insulation.
q. C534 - Specification for Preformed Flexible Elastomeric Cellular Thermal Insulation in Sheet and Tubular Form.
r. C547 - Specification for Mineral Fiber Preformed Pipe Insulation.
s. C553 - Specification for Mineral Fiber Blanket-Type Pipe Insulation (Industrial Type).
t. C592 - Mineral Fiber Blanket Insulation and Blanket-Type Pipe Insulation (Metal-Mesh Covered).
u. C612 - Specification for Mineral Fiber Block and Board Thermal Insulation.
v. C921 - Practice for Determining Properties of Jacketing Materials for Thermal Insulation.
w. C1104 – Standard Test Method for Determining the Water Vapor Sorption of Unfaced Mineral Fiber Insulation.
x. C1071 - Standard Specification for Thermal and Acoustical Insulation.
y. C1338 – Standard Test Method for Determining Fungi Resistance of Insulation Materials and Facings..
z. E84 - Test Method for Surface Burning Characteristics of Building Materials.
aa. E119 - Test for Fire Resistance.
bb. G21 – Standard Practice for Determining Resistance of Synthetic Polymeric Materials to Fungi.
cc. G22 – Standard Practice for Determining Resistance of Synthetic Polymeric Materials to Bacteria.

2. American Society of Heating, Refrigerating, and Air-Conditioning Engineers (ASHRAE): Provide and install pipe and duct insulation in accordance with the following ASHRAE Standard:

   a. 90 Energy Conservation in New Building Design.

3. National Fire Protection Association (NFPA): Manufacture insulation in accordance with the following NFPA standards:

   a. 255 Test Methods, Surface Burning Characteristics of Building Materials.

B. Do not provide materials with flame proofing treatments subject to deterioration due to the effects of moisture or high humidity.

C. Products Containing Prohibited Chemicals:

1. Products containing the following prohibited chemicals for use as flame retardants or for other purposes will not be acceptable:

   a. Pentabrominated diphenyl ether (CAS#32534-81-9)
   b. Octabrominated diphenyl ether (CAS#32536-52-0)
   c. Decabrominated diphenyl ether (CAS#1163-19-50

D. Flame/Smoke Rating: Provide composite mechanical insulation (insulation, jackets, coverings, sealers, mastics and adhesives) with flame-spread index of 25 or less, and smoke-developed index

of 50 or less, as tested by ASTM E84 (NFPA 255) Method. In addition, the products, when tested, shall not drip flame particles, and flame shall not be progressive. Provide Underwriters Laboratories, Inc., label or listing; or satisfactory certified test report from an approved testing laboratory to prove the fire hazard ratings for materials proposed for use do not exceed those specified.

E. Corrosiveness: Provide insulation such that when tested in accordance with the following test, the steel plate in contact with the insulation shows no greater corrosion than sterile cotton in contact with a steel plate for comparison.

1. Test Specimen: Two specimens shall be used, each measuring 1” by 4” by approximately ½” thick.

2. Apparatus: Provide a humidity test chamber in which two polished-steel test plates, 1” wide, 4” long and 0.020” thick, shall be placed. Plates shall be clear finish, cold-rolled strip steel, American quality, quarter hard, temper No. 3, weighing 0.85 lb/sq. ft.

3. Procedure: The steel test plates shall be rinsed with cp benzol until their surfaces are free from oil and grease and allowed to dry. One piece of cold-rolled steel shall be placed between the two insulation specimens and secured with tape or twine. The test specimen and uncovered plate shall be suspended vertically in an atmosphere having a relative humidity of 95% (plus or minus 3%), and a temperature of 120°F (plus or minus 3°F), for 96 hours, and then be examined for corrosion.

F. Insulation thickness shall be the greater standard of that specified here or the State energy conservation requirements.

1.06 SUBMITTALS

A. Product Data: Submit manufacturer's technical product data and installation instructions for each type of mechanical insulation. Submit schedule showing manufacturer's product number, K-value, thickness, and furnished accessories for each mechanical system requiring insulation. Also furnish necessary test data certified by an independent testing laboratory. Submit samples.

B. Provide a statement with the submittal indicating that no product submitted contains an amount equal to or greater than 0.10% by mass of the following chemicals:

1. Pentabrominated diphenyl ether (CAS#32534-81-9)

2. Octabrominated diphenyl ether (CAS#32536-52-0)

3. Decabrominated diphenyl ether (CAS#1163-19-50

C. Maintenance Data: Submit maintenance data and replacement material lists for each type of mechanical insulation. Include this data and product in maintenance manual.

1.07 DELIVERY, STORAGE, AND HANDLING

A. Deliver insulation, coverings, cements, adhesives, and coating to the site in containers with manufacturer's stamp or label affixed showing fire hazard indexes of products.

B. Store and protect insulation against dirt, water, chemical, and mechanical damage. Do not install damaged or wet insulation; remove from project site.

PART 2 - PRODUCTS

2.01 MANUFACTURERS

A. Johns Manville, Owens-Corning, Knauf, Armstrong, Pittsburgh-Corning, Certainteed, Halstead, Rubatex, 3M FireMaster, Pabco, Reflectix, or approved equal. Manufacturer and insulation types listed below indicate a minimum acceptable level of quality required for each classification.

2.02 PIPE INSULATIONS

A. Glass Fiber: Molded fibrous glass pipe insulation shall comply with the requirements of ASTM C 547 and meet ASTM C 585 for sizes required in the particular system. For all fluid distribution temperatures below 45°F the system shall be of a wicking type.

1. Manufacturers:

   a. Johns Manville Micro-Lok plain with PVC cover Meeting ASTM C547; or Micro-Flex (pipe sizes larger than 18”), Knauf einsulation.

2. Applications: Insulation of piping up to 18” in diameter and 3” thick insulation.

3. 'K' Value: 0.23 at 75°F.

4. Maximum Service Temperature: 850°F.

5. Vapor Retarder Jacket: AP-T PLUS white kraft paper reinforced with glass fiber yarn and bonded to aluminum foil, secure with self sealing longitudinal laps and butt strips or AP jacket with outward clinch expanding staples or vapor barrier mastic as needed.

B. Rigid polyisocyanurate foam: HiTHERM HT-300.

1. ‘K’ Value: 0.165 at 75°F (24°C)

2. Maximum Continuous Service Temperature: 300°F.

3. Vapor Retarder Jacket: Saran 540/SSL or Mylar laminate.

C. Hydrous Calcium Silicate: Johns Manville Thermo-12/Gold, ASTM C533; Rigid Molded Pipe:

1. 'K' Value: 0.40 at 300°F.

2. Maximum Service Temperature: 1,200°F.

3. Compressive Strength (block): Minimum of 200 psi to produce 5% compression at 1½" thickness.

4. Tie Wire: 16 gauge stainless steel with twisted ends on maximum 12” centers.

D. Flexible Elastomeric Closed Cell Thermal Insulation: Armacel, Rubatex k-flex ECO, closed-cell, halogen free, elastomeric insulation. Comply with ASTM-C177, ASTM E 84 and UL 181.

1. ‘K’ Value: 0.27 at 75°F.

2. Density: 3.0 to 6.0 lbs./cu.ft.

3. Maximum Service Temperature: 260°F.

4. Seal all seams and joints with contact adhesive.

E. Field Applied Jackets (For Interior Applications):

1. All longitudinal seams shall be located on bottom of pipes.

2. PVC Plastic: Johns Manville Zeston 2000. One piece molded type fitting covers and jacketing material, gloss white. Connect with tacks and pressure sensitive color matching vinyl tape.

3. Canvas Jacket: UL listed fabric, 6 oz/sq. yd. plain weave cotton, treated with dilute fire retardant lagging adhesive.

4. Aluminum Jacket: 0.016” thick sheet, [smooth/embossed] finish, with longitudinal slip joints and 2” laps, die shaped fitting covers with factory attached protective liner.

5. Secure aluminum jackets with 3/8” or ½” stainless steel bands on 12” centers.

F. Field Applied Jackets (For Exterior Applications):

1. All longitudinal seams, on horizontal pipe runs, shall be installed on the bottom of pipes.

2. Aluminum Jacket: 0.016” (minimum) thick sheet, [smooth/embossed] finish, with longitudinal slip joints and 2” laps, die shaped fitting covers with factory attached protective liner.

3. Stainless Steel Jacket: Type 304 stainless steel, 0.010” minimum (smooth/corrugated) finish.

4. Secure stainless steel or aluminum jackets with ⅜” or ½” stainless steel bands on 12” centers.

5. Manufacturers: Pabco, Childers, RPR, or approved equal.

G. Removable Covers:

1. Provide removable covers on pumps, valves, air separators, vents, fittings, flanges, strainers, traps, etc., where periodic maintenance or removal of insulation may is required.

2. Use of premolded fittings with PVC covers is acceptable.

3. Use of lace-on type insulating blankets is acceptable.

2.03 EQUIPMENT INSULATIONS

A. Flexible Fiberglass Blanket: Johns Manville Microlite Type 75 Flexible Blanket:

1. 'K' Value: ASTM C518, 0.27 Btu•in./(hr•ft²•ºF) at 75°F installed full thickness.

2. Maximum Service Temperature: 250°F.

3. Density: 0.75 lb/cu ft.

4. Vapor Barrier Jacket: FSK (Foil-Scrim-Kraft) aluminum foil faced reinforced with fiberglass yarn and laminated to fire-resistant kraft, secured with UL listed pressure sensitive tape and/or outward clinched expanded staples and vapor barrier mastic as needed.

B. Rigid Fiberglass Board: Johns Manville Mat-Faced Micro-Aire Rigid Board:

1. 'K' Value: ASTM C518, 0.23 Btu•in./(hr•ft²•ºF) at 75°F.

2. Maximum Service Temperature: 250°F.

3. Density: 3.0 lb/cu ft.

4. Vapor Barrier Jacket: FSK (Foil-Scrim-Kraft) aluminum foil faced reinforced with fiberglass yarn and laminated to fire-resistant kraft, secured with UL listed pressure sensitive tape and/or outward clinched expanded staples and vapor barrier mastic as needed.

5. Facing: 1” galvanized hexagonal wire mesh stitched on one face of insulation. (Optional.)

C. Rigid Fiberglass Board: Johns Manville 1000 Spin-Glas Meeting ASTM C612; Rigid, Noncombustible:

1. 'K' Value: ASTM C518, 0.23 Btu•in./(hr•ft²•ºF) at 75°F.

2. Maximum Service Temperature: 850°F.

3. Density: 3.0 lb/cu ft.

4. Facing: 1” galvanized hexagonal wire mesh stitched on one face of insulation. (Optional.)

D. Hydrous Calcium Silicate: Johns Manville Thermo-12/Gold Meeting ASTM C533; Rigid Molded Block; Asbestos-Free Coded Throughout Material Thickness and Maintained Throughout Temperature Range:

1. 'K' Value: 0.40 at 300°F.

2. Maximum Service Temperature: 1,200°F.

3. Compressive Strength (block): Minimum of 200 psi to produce 5% compression, based on 1½" thickness.

4. Securement: Insulation shall be securely banded in place, tightly butted, joints staggered and secured with 16 gauge galvanized or stainless steel wire or ½" x .015" galvanized steel bands on 12” maximum centers for large areas.

PART 3 - EXECUTION

3.01 EXAMINATION AND PREPARATION

A. Verify that piping has been tested for leakage in accordance with specifications before applying insulation materials. All piping shall be inspected by Owner's Representative prior to installation of insulation. Any insulation applied prior to inspection shall be removed and new insulation applied at no additional cost to Owner. Notify Owner's Representative five (5) working days prior to insulation installation.

B. Verify that all surfaces are clean, dry and free of foreign material.

3.02 INSTALLATION

A. General:

1. Install materials in accordance with manufacturer's recommendations, building codes and industry standards.

2. Remove and replace any insulation that has become wet or damaged during the construction process.

3. Continue insulation and vapor barrier at penetrations and supports, except where prohibited by code.

B. Piping Insulation:

1. Locate insulation and cover seams in least visible locations unless otherwise specified.

2. Neatly finish insulation at supports, protrusions, and interruptions.

3. Provide insulated dual temperature pipes or cold pipes conveying fluids below ambient temperature with vapor retardant jackets with self sealing laps. Insulate complete system.

4. For insulated pipes conveying fluids above ambient temperature, secure jackets with self sealing lap or outward clinched, expanded staples. Seal ends of insulation at equipment, flanges, and unions.

5. Provide insert between support shield and piping on piping 1½" diameter or larger. Fabricate of Johns Manville Thermo-12, or other heavy density insulating material suitable for temperature. Insulation inserts shall not be less than the following lengths:

a.	1½" to 2½" pipe size	10" long
b.	3" to 6" pipe size	12" long
c.	8" to 10" pipe size	16" long
d.	12" and over	22" long

6. Use of metal saddles is acceptable as specified in Section 15050. Fill interior voids with segments of insulation matching adjoining pipe insulation.

7. Use of pipe hangers designed as an insulation coupling is acceptable in lieu of saddles and other devices. Klo-Shure coupling or equal.

8. For pipe exposed in mechanical equipment rooms or in finished spaces below 7 feet above finished floor, finish with Johns Manville Zeston 2000 PVC jacket and fitting covers, or aluminum or stainless steel jacket.

9. Where pumps, valves, strainers, etc., with insulation require periodic opening for maintenance, repair, or cleaning, install insulation in such a manner that it can be easily removed and replaced without damage. Use of premolded covers or lace-on type insulation blankets is required.

10. For exterior applications:

a. Provide weather protection jacket. Insulated pipe lengths, pumps, fittings, joints, and valves shall be covered with aluminum jacket or stainless steel jacket. Jacket seams shall be located on bottom side of horizontal piping. All lateral joints shall be caulked with a minimum 20-year silicone sealant (clear). All longitudinal joints, except those at the bottom of a horizontal pipe run, shall be caulked with a minimum 20-year silicone sealant (clear).

b. Apply weather-resistant protective finish such as WB Armaflex to flexible elastomeric insulation. Insulation seams shall be located on the bottom side of horizontal piping. All lateral and longitudinal joints to be sealed with low V.O.C., UV inhibitive adhesive, such as Armaflex 520 BLV adhesive.

11. For underground installations, install per manufacturer's written instructions and recommendations.

12. When maintenance or service access for equipment will result in foot traffic over floor mounted insulated piping the contractor is to fabricate a permanent removable walkway to prevent damage to the piping and insulation.

C. Equipment Insulation:

1. See Piping Insulation above for additional requirements.

2. Apply insulation as close as possible to equipment by grooving, scoring, and beveling insulation, if necessary. Secure insulation to equipment with studs, pins, clips, adhesive, wires, or bands, per manufacturer’s recommendations.

3. Fill joints, cracks, seams, and depressions with bedding compound to form smooth surface. On cold equipment, use vapor retardant cement.

4. Provide insulated dual temperature equipment or cold equipment containing fluids below ambient temperature with vapor retardant jackets.

5. For insulated equipment containing fluids above ambient temperature, provide jacket with or without vapor barrier.

6. Cover insulation with metal mesh and finish with heavy coat of insulating cement, mastic, or aluminum jacket as indicated in the drawings.

7. For equipment in mechanical equipment rooms or in finished spaces, finish with Johns Manville Zeston 2000 jacketing and fitting covers or aluminum or stainless steel jacketing.

8. Do not insulate over nameplate or ASME stamps. Bevel and seal insulation around such.

9. When equipment with insulation requires periodic opening for maintenance, repair, or cleaning, install insulation in such a manner that it can be easily removed and replaced without damage. Use of lace-on type insulation blankets is acceptable.

3.03 PIPING INSULATION SCHEDULE

A. All insulation thicknesses shall meet or exceed state energy code requirements as noted below. Increase thickness ½” if exposed to exterior ambient air. Minimum thermal resistance in range of 4.2 to 4.6 per inch of thickness. Insulation thicknesses are based on fiberglass insulation and may be adjusted for equivalent insulation values for materials with superior “K” factors.

B. Fiberglass Insulation

	PIPE SIZE (inches)	THICKNESS (inches)
Domestic hot water	Up to 2 2 ½ and over	1 1 ½
Domestic hot water return	All Sizes	1
Roof and overflow drain bodies	All Sizes	1
Horizontal roof and overflow drainage	Up to 2 2 ½ and over	1 1
Misc. drains from electric water coolers, ice machines, etc.	All Sizes	1

C. Elastometric Foam (Closed Cell):

	PIPE SIZE (inches)	THICKNESS (inches)
Condensate drain pipes	All Sizes	½

END OF SECTION

SECTION 221123

PLUMBING EQUIPMENT

PART 1 - GENERAL

1.01 APPLICABLE REQUIREMENTS

A. All work to be furnished and installed under this section shall comply with all the requirements of General Conditions, Supplemental Conditions, Division 01 - General Requirements, and Section 220500 - Basic Materials and Methods, and other Sections in Division 22 specified herein.

1.02 SCOPE

A. All work to be furnished and installed under this section shall include but not necessarily be limited to the following:

1. Water heaters

2. Expansion Tank

1.03 RELATED WORK SPECIFIED ELSEWHERE

A. Section 220500: Basic Materials and Methods.

B. Section 220501: Plumbing.

C. Section 220700: Plumbing Insulation.

D. Section 222113: Plumbing Piping, valves and specilaties.

E. Section 222123: Pumps and Specialties.

F. Section 224000: Plumbing Fixtures.

1.04 SECTION 224000: PLUMBING FIXTURES.SUBMITTALS

A. Prior to construction submit for approval all materials and equipment in accordance with Division 01. Submit manufacturer's data, colors, installation instructions, and maintenance and operating instructions for all components of this section including, but not limited to, the following:

1. Water heaters

2. Expansion Tank

B. Electrical Work: Refer to Division 22, Section 220500 for requirements.

C. Shop Drawings: Submit rough-in drawings. Detail dimensions, rough-in requirements, required clearances, and methods of assembly of components and anchorages.

D. Wiring Diagrams: Submit manufacturer's electrical requirements for electrical power supply wiring. Submit manufacturer's ladder-type wiring diagrams for interlock and control wiring required for final installation. Differentiate between portions of wiring that are factory installed and portions that are to be field installed.

E. Maintenance Data: Submit maintenance data and parts lists for each type and size of water heater, control, and accessory, including "trouble-shooting" maintenance guide. Include this data, product data, shop drawings, and wiring diagrams in maintenance manual, in accordance with requirements of Division 01.

F. Certificates: Submit appropriate Certificates of Shop Inspection and Data Report as required by provisions of ASME Boiler and Pressure Vessel Code.

G. Start-up: Provide written report on start-up in accordance with Section 220500.

1.05 DELIVERY, STORAGE, AND HANDLING

A. Deliver units to the site in containers with manufacturer's stamp or label affixed.

B. Store and protect products against dirt, water, chemical, and mechanical damage. Do not install damaged products - remove from project site.

1.06 WARRANTY

A. Provide one year (12 months) warranty. The warranty shall include parts, labor, travel costs, and living expenses to repair or replace products or systems.

PART 2 - PRODUCTS

2.01 HIGH EFFICIENCY CONDENSING HOT WATER HEATER - GAS

A. Water heater shall be fully condensing with 94% thermal efficiency with closed combustion venting.

B. Water heater shall be of a seamless glass lined steel tank construction and include a powered gas burner with electronic flame safeguard, intermittent ignition, automatic gas valve, and gas pressure regulator. Maximum supply gas pressure to heater 14" W.C. Heater shall have capacities as indicated on contract documents.

C. Water heater shall be suitable for sealed combustion direct venting using a CPVC air intake pipe and CPVC exhaust pipe for a total distance of 50 equivalent feet of vent and 50 equivalent feet of intake. The heater shall be approved for 0” clearances to combustibles.

D. Water heater controls shall include integrated solid state temperature and ignition control device with integral diagnostics, LED fault display capability and a digital display of temperature settings.

E. Tank shall be foam insulated and equipped with an ASME rated temperature pressure relief valve. The water heater shall be UL listed and exceed the minimum efficiency requirements of ASHRAE/IES 90.1b-1992.

F. Set water heater temperature supply temperature to 120°F.

G. Route condensate to floor sink through neutralizer, JJM Boiler Works.

H. Manufacturer: A. O. Smith #Cyclone BTH, or Bradford White.

2.02 RELIEF VALVES

A. Temperature and Pressure Relief Valve: Watts, bronze body construction, thermostat and test lever, temperature relief set at 210° F, and pressure relief set at 125 psi.

B. Acceptable manufacturers: Watts, Kunkle, Keckley or Cash Acme.

2.03 EXPANSION TANK

A. Furnish and install where shown on plans for domestic hot water system.

B. ASME stamped and constructed vessel with the following:

1. Tanks rated for 150 psi maximum working pressure.

2. Black steel construction painted with “Hammertone” blue enamel.

3. Tank saddle supports.

4. Stainless connection opening.

5. Butyl diaphragm bonded to polypropylene liner.

6. Pre-charged air chamber permanently sealed.

7. Air valve.

C. Manufacturer: Amtrol AST, Adamson, RECO or Watts.

PART 3 - EXECUTION

3.01 GENERAL

A. Examine areas and conditions under which equipment is to be installed. Do not proceed with work until unsatisfactory conditions have been corrected.

B. Install equipment in accordance with manufacturer's installation instructions. Install units plumb and level, firmly anchored in locations indicated, and maintain manufacturer's recommended clearances.

C. Orient so controls and devices needing service and maintenance have adequate access.

D. Connect water piping to units with shutoff valves and unions as indicated.

E. Start-Up: Start-up, test, and adjust equipment in accordance with manufacturer's start-up instructions. Check and calibrate controls. Start-up to be by authorized manufacturer's representative or agent.

3.02 OPERATION MANUALS, START-UP SERVICE, WARRANTIES, ACCEPTANCE AND GUARANTEES

A. General: Refer to Section 220500 for details.

END OF SECTION

SECTION 222113

PLUMBING PIPING, VALVES AND SPECIALTIES

PART 1 - GENERAL

1.01 APPLICABLE REQUIREMENTS

A. All work to be furnished and installed under this section shall comply with all the requirements of General Conditions, Supplemental Conditions, Division 01 - General Requirements, Section 220500 - Basic Materials and Methods, and other Sections in Division 22 specified herein.

1.02 SCOPE

A. All work to be furnished and installed under this Section shall comply with all the requirements of Division 01, and shall include, but not necessarily be limited to the following:

1. Pipe and Fittings

   a. Sanitary waste and vent
   b. Storm drain and overflow
   c. Cold water
   d. Hot water
   e. Fuel gas

2. Valves

   a. Water valves
   b. Natural gas valves
   c. Balancing valves
   d. Pressure reducing valves
   e. Gas pressure regulator valves
   f. Thermostatic mixing valves
   g. Solenoid valves

3. Thermometers and gauges
4. Piping specialties

   a. Pipe escutcheons
   b. Strainers
   c. Drip pans
   d. Dielectric unions
   e. Unions
   f. Flanges
   g. Pipe sleeves
   h. Sleeve seals
   i. Valve boxes
   j. Pipe coating
   k. Gas connectors

1.03 RELATED WORK SPECIFIED ELSEWHERE

A. Section 220500: Basic Materials and Methods

B. Section 220700: Plumbing Insulation

C. Section 220501: Plumbing

D. Section 221123: Plumbing Equipment

E. Section 222123: Pumps and Specialties

F. Section 224000: Plumbing Fixtures

G. Division 26: Electrical

1.04 QUALITY ASSURANCE

A. Manufacturers Qualifications:

1. Manufactured items furnished shall be the current, cataloged product of the manufacturer.

2. Replacement parts shall be readily available and stocked in the USA.

B. Codes and Standards:

1. All work shall be in full accordance with all applicable codes, ordinances and code rulings.

2. The Contractor shall furnish without any extra charge the labor and material required for compliance of codes.

3. Perform all tests required by governing authorities and as required under all Division 22 Sections. Provide written reports on all tests.

4. Electrical devices and wiring shall confirm to the latest standards of NEC; all devices shall be UL listed and so identified.

5. All plumbing work shall comply with the Americans with Disabilities Act (ADA).

6. All excavation work must comply with all provisions of state laws including notification to all owners of underground utilities at least 48 business day hours, but not more than 10 business days, before commencing an excavation.

1.05 SUBMITTALS

A. Product Data: Submit manufacturer's technical product data for all piping, valves and specialties indicating dimensions, valve CV, tolerances etc.

B. Shop Drawings: Submit shop drawings indicating underground piping installation showing all fittings with inverts. Indicate all footings and grade beams.

C. Maintenance Data: Submit maintenance instructions on accordance with requirements of Division 01.

PART 2 - PRODUCTS

2.01 GENERAL

A. Furnish and install all new material, equipment, and apparatus hereinafter specified unless specifically noted otherwise. All material, equipment, and apparatus shall be identified by the manufacturer's name, nameplate, and pertinent data.

1. All pipe, pipe fittings and valves shall be manufactured in North America. Alternatives may be acceptable, but must be submitted and approved by the Engineer prior to bidding.

B. Type M copper piping is not acceptable for any pressure water piping unless specifically noted otherwise.

C. For all Grade B piping specified below grade provide a mill report with production identification numbers for piping submitted to permit tracking of pipe by mill and production lot.

D. All materials, equipment, and apparatus are mentioned as standards unless noted otherwise. The words "or approved equal" shall be considered to be subsequent to all manufacturer's names used herein, unless specifically noted that substitutes are not allowed.

2.02 STANDARD PIPE AND FITTING

A. Natural Gas Pipe & Fitting (Above Grade)

1. Pipe: ASTM A53, Schedule 40 black steel.

a. Fittings: 150 lb. rating. ANSI B16.3, malleable iron threaded; ANSI B16.5, flanged; ANSI B16.9, steel.
b. Joints: 2" and smaller, threaded (except in the case of piping located in shafts or plenums which must be welded); all piping inside the building 2-1/2" and larger, ANSI B16.25 bevelweld, ANSI B16.5 flanges, or ANSI B16.11 socket weld.

B. Natural Gas Piping (Below Grade)

1. Polyethylene, Grade 23, Type II, ASTM 2513, plain ends, heat fused joints, orange finish.

C. Trap Primer Piping:

1. Pipe: Domestic Only, ASTM B88, Type K, soft drawn copper water tube.

2. Fittings: No joints below ground. For pipes below grade double wrap with Scotch Wrap #51 or PASCO Wrap, with 50% overlap.

D. Domestic Water Pipe & Fittings (Below Grade):

1. Pipe: ASTM B88, Type K hard drawn copper water tube.

2. Fittings: Domestic Only, Elkhart, ANSI B16.22, wrought copper, 95%-5% tin-antimony solder joints. Wrap underground piping with Scotch Wrap or Pasco Wrap.

E. Domestic Cold Water Pipe and Fittings (Above Grade):

1. Pipe: Schedule 10 type 304 stainless steel with roll groove fittings. ASTM A268.

2. Fittings: Victaulic grooved stainless steel fittings.

3. Joints: Roll groove.

F. Condensate and indirect drains:

1. Pipe: ASTM B88, Type M, hard drawn copper water tube.

2. Fittings: ANSI B16.22, wrought copper.

3. Joints: Lead-free solder joints. Solder shall be lead-free nickel/silver bearing solder meeting ASTM B-32, ASTM B-828. Flux shall be water soluble and shall meet CDA standard test method 1.0 and ASTM B813-91.

4. Insulate condensate drain pipes with minimum ½" insulation to prevent moisture dripping from pipe.

G. Domestic Hot and Cold Water Pipe & Fittings (Above Grade):

1. Pipe: ASTM B88, Type L, hard drawn copper water tube.

2. Fittings: ANSI B16.22, wrought copper, 95%-5% tin-antimony solder joints.

H. Sanitary Sewer, Vent, Rainwater Pipe & Fittings:

1. Pipe: Tyler or AB&I or Charlotte Pipe and Foundry, ASTM A-74, ASTM A-888 cast iron, bituminous coated, “No-Hub”. Pipe and fittings shall be marked with the collective trademark of the Cast Iron Soil Pipe Institute and manufactured by AB &I, Charlotte or Tyler. Pipe showing rust or cracks in coating shall be removed and replaced.

2. Fittings: No-hub, ASTM A-888.

3. Couplings Below Grade: Heavy Duty Type 304 stainless steel couplings conforming to FM 1680 with neoprene sealing sleeve conforming to ASTM C-1540 having minimum shield thickness of 28 gauge. Husky SD-4000 or Clamp All 125 only.

4. Couplings Above Grade: Type 304 stainless steel couplings conforming to ASTM C-1540 and neoprene sealing sleeve, having minimum shield thickness of 34 gauge. Anaco or Ideal.

2.03 VALVES: GENERAL

A. General: Valve ratings shall exceed respective system operating pressures by 50% (minimum). All valves shall be line size unless otherwise noted.

B. Product Data: Submit manufacturer’s technical product data, including installation instructions for each type of valve. Include pressure drop curve or chart for each type and size of valve. Submit valve schedule showing manufacturer’s figure number, size, location, and valve features for each required valve.

C. Shop Drawings: Submit manufacturer’s assembly-type (exploded view) shop drawings for each type of valve, indicating dimensions, weights, materials, and methods of assembly of components.

D. Acceptable manufacturers (manufacturer and model number listed for individual valves indicates minimum acceptable by all manufacturers):

1. Gate, Ball, Check or Butterfly: Apollo, Hammond, Nibco (commercial grade, US manufacturer only), Milwaukee, Victaulic or Watts.

2. Lubricated Plug Valves: Homestead, Resun, or Rockwell.

3. Backflow Preventors: Apollo, Ames, Febco, Cla-Val, Watts or Wilkins.

4. Pressure Reducing Valves: Apollo, Cash-Acme, Cla-Val, Watts, or Wilkins.

5. Circuit Setters: Griswold (Venturi with characterized ball valve only), Wheatley (Y-globe type only), Armstrong, or Tour & Anderson.

E. Valve Identification: Provide valves with manufacturer's name (or trademark) and pressure rating clearly marked on the valve body.

F. Operators: Provide handwheels, fastened to valve stem, for valves other than quarter-turn. Provide lever handle for quarter-turn valves, other than plug valves. Provide one wrench for every 10 plug valves, and one in each size. Provide extended levers/stems for valves on insulated lines. For manual valves 2 ½" and larger located 8 feet above the floor in mechanical rooms provide chain operator to permit operating the valve from 4'-0" above floor.

G. Valve Features:

1. General: Provide valves with features indicated and, where not otherwise indicated, provide proper valve features. Comply with ASME B31.9 for building services piping, and ASME B31.1 for power piping.

2. Drain: Comply with MSS SP-45, and provide threaded pipe plugs.

3. Flanged: Valve flanges complying with ANSI B16.1 (cast iron), ANSI B16.5 (steel), or ANSI B16.24 (bronze).

4. Threaded: Valve ends complying with ANSI B2.1.

5. Solder-Joint: Valve ends complying with ANSI B16.18.

6. Flangeless: Valve bodies manufactured to fit between flanges complying with ANSI B16.1 (cast iron), ANSI B16.5 (steel), or ANSI B16.24 (bronze).

2.04 DOMESTIC PLUMBING SERVICE VALVES

A. Gate Valves:

1. 2" and Smaller: Class 125, MSS SP-80, ASTM B62 cast bronze body, soldered ends, bronze bonnet, bronze wedge, rising stem, brass packing gland, non-asbestos packing and aluminum hand-wheel.

2. 2-1/2" and Larger: Class 125, MSS SP-70, ASTM A126 Grade B cast iron body, flanged ends, cast iron bonnet, cast iron wedge, bronze trim, rising stem, brass packing gland, non-asbestos packing and cast iron hand-wheel.

B. Butterfly Valves:

1. 3” and Larger: MSS SP-67, lug wafer, ductile iron body, stainless steel disc, stainless steel stem, EPDM seat, memory stop control, lever handle thru 5" size and worm gear operator for 6" and larger. Mount stem in horizontal position. Hammond 6100 series.

C. Ball Valves:

1. 2 1/2" and Smaller: 600 psi, 2 piece, bronze body, soldered ends for copper pipe and threaded ends for iron pipe, chrome plated brass ball, Teflon seat, brass stem, steel handle, full port. Apollo 70-200 series.

D. Check Valves:

1. 2" and Smaller: Class 125, MSS SP-80, ASTM B62 and ASTM B16, cast bronze body, soldered ends for copper pipe, screwed cap, swing type, Teflon bronze disc.

2. 2-1/2" and Larger: Class 125, MSS SP-71, ASTM A126 class B cast iron body, bolted bonnet flanged ends, bolted cap, swing type, cast iron disc with bronze face rings.

3. Vertical or High Flow: Class 125, cast bronze, high-flow body, TFE seat, brass check, stainless steel guide and spring. Watt #6015.

2.05 NATURAL GAS, LP GAS AND OIL SERVICE VALVES

A. Ball Valves:

1. ½" and ¾": Brass body, U.L. listed, CSA approved for pressure of system, bronze ball valve, 175 WOG, with integral lever handle. Apollo 64 series or Watts #FBV-1.

2. 1" thru 1-1/2": 175 psi working pressure, CSA and UL approved, bronze body, welded ends, stainless steel ball, stainless steel stem, steel handle with memory stop tab, conventional port.

3. Lubricated Plug Valve, 2" and Larger: Class 125, MSS SP-78, 200 PSI, UL listed, CSA approved for pressure of system, lubricated plug type, semi-steel body, loose wrench operated, straight way pattern round port, combination button head fitting and lubricant screw, Teflon seal and discs.

B. Seismic Gas Shutoff Valves:

1. ¾” thru 2” (low and medium pressure, screwed body): U.L. Listed valve meeting ASCE 25-97, positive closure, soft seal seating, visual open-close indicator, manual reset, and closure time interval within 5 seconds when subjected to a sinusoidal oscillation with peak acceleration of 0.3G and a period of 0.4 seconds. Koso/California Valve Series EV, or approved equal, sized for 0.5 PSI or 20 PSI max operating pressure, respectively.

2. 2”, 3” and 4” (High pressure, screwed body): U.L. Listed valve meeting ASCE 25-97,manual reset, soft seat construction for positive sealing, visual open-close indicator, tripping mechanism with non-creeping rolling latch, and closure time interval within 5 seconds when subjected to sinusoidal oscillation with peak acceleration of 0.3G and a period of 0.4 seconds. Koso/California Valve Series EV315, or approved equal, sized for 20 PSI max. operating pressure.

2.06 PRESSURE RELIEF VALVES

A. Pressure Relief Valves: Constructed in accordance with ASME, 125-pound setting, and so stamped. Size as required. Watts #740 series or equal.

B. Temperature and Pressure Relief Valve: Constructed in accordance with ASME, 125-pound setting, and so stamped. Size as required. Watts #100XL, 40XL, 140, N240, or 340 series or equal.

2.07 GAS PRESSURE REGULATOR VALVES

A. Diaphragm operated, steel construction of size and capacity as indicated on drawings. Regulators shall be approved serving gas supplier, CSA and UL listed. Fisher, Sherwood, or approved equal.

2.08 THERMOMETERS AND GAUGES

A. General:

1. Certification: Provide meters and gauges whose accuracies, under specified operating conditions, are certified by manufacturer.

2. No mercury shall be used in thermometers due to hazardous material classification.

3. Acceptable Manufacturers: Weksler, Winters, Trerice, Marshalltown or US Gauge.

B. Thermometers:

1. Bi-Metal Type: Provide bi-metal glass thermometers of materials, capacities, and ranges indicated, designed and constructed in service indicated. Accuracy shall be 1% +/- full scale with adjustable recalibration.

   a. Case: Type 300 series stainless steel, hermetically sealed, glass window, 3" diameter dial, with adjustable angle.
   b. Adjustable Joint: Die cast aluminum, finished to match case, 180° adjustment in vertical plane, 360° adjustment in horizontal plane, with locking device.
   c. Scale: Satin faced, non-reflective aluminum, permanently etched markings.
   d. Stem: Stainless steel, adjustable angle socket, length to suit installation.

2. Glass Thermometer: Provide adjustable angle 9” thermometer of materials, capacities and ranges as appropriate to medium being measured and designed and constructed for service indicated. Accuracy to be 1% +/- of full scale.

   a. Case: Aluminum or Valox
   b. Temperature Sensitive Gage Liquid: Organic non-toxic. No mercury permitted.
   c. Scale: Aluminum painted white with black markings.
   d. Connection: ½” NPT with thermowell, 1 ¼” UNF swivel nut without thermowell.

3. Range: Conform to the following:

   a. Hot Water: 20°F - 240°F with 2°F scale divisions.
   b. Cold Water: -40°F - 160°F with 2°F scale divisions.

C. Thermometer Test Wells:

1. Provide thermometer test wells as indicated, constructed of brass or stainless steel, pressure rated to match piping system design pressure. Provide 2" extension for insulated piping. Provide cap nut with chain fastened permanently to thermometer well.

D. Temperature Gauge Connector Plugs:

1. Provide temperature gauge connector plugs pressure rated for 500 psi and 200°F (93°C). Construct of brass and finish in nickel-plate, equip with ½" NPS fitting, with self-sealing valve core type neoprene gasketed orifice suitable for inserting $^{1}/_{8}$" O.D. probe assembly from dial type insertion thermometer. Equip orifice with gasketed screw cap and chain. Provide extension, length equal to insulation thickness, for insulated piping.

E. Pressure Gauges:

1. General: Provide pressure gauges of materials, capacities, and ranges indicated, designed and constructed for use in service indicated.

2. Type: General use, 1% accuracy ANSI B40.1 grade A, phosphor bronze bourbon type, bottom connection.

3. Case: Drawn steel or brass, glass lens, 4-1/2" diameter.

4. Connector: Brass with ¼" male NPT.

5. Scale: White coated aluminum, with permanently etched markings.

6. Pressure differential range shall be 100 psig minimum for the appropriate application with maximum 1 psig divisions.

F. Pressure Gauge Cocks:

1. General: Provide pressure gauge cocks between pressure gauges and gauge tees on piping systems. Gauge cock constructed of brass with ¼" female NPT on each end, and "T" handle brass plug.

2. Syphon: ¼" straight coil constructed of brass tubing with ¼" male NPT on each end.

3. Snubber: ¼" brass bushing with corrosion resistant porous metal disc, through which pressure fluid is filtered. Select disc material for fluid served and pressure rating.

G. Pressure Gauge Connector Test Plugs:

1. Provide pressure gauge connector plugs pressure rated for 500 psi and 200°F (93°C). Constructed of brass and finish in nickel-plate, equip with ½" NPS fitting, with self-sealing valve core type neoprene gasketed orifice suitable for inserting 1/8" O.D. probe assembly from dial type insertion pressure gauge. Equip orifice with gasketed screw cap an chain. Provide extension, length equal to insulation thickness, for insulated piping.

2.09 PIPING SPECIALTIES

A. General:

1. Provide factory-fabricated piping specialties recommended by manufacturer for use in service indicated. Provide piping specialties of types and pressure ratings indicated for each service, or provide proper selection to comply with installation requirements. Provide sizes as

indicated, and connections, which properly mate with pipe, tube, and equipment connections. Where more than one type is indicated, selection is installer's option.

B. Pipe Escutcheons:

1. Provide pipe escutcheons as specified herein with inside diameter closely fitting pipe outside diameter, or outside of pipe insulation where pipe is insulated. Select outside diameter of escutcheon to completely cover pipe penetration hole in floors, walls, or ceilings; and pipe sleeve extension, if any. Furnish pipe escutcheons with nickel or chrome finish for occupied areas, prime zinc base paint finish for unoccupied areas.

2. Pipe Escutcheons for Moist Areas: For waterproof floors, and areas where water and condensation can be expected to accumulate, provide stainless steel, cast brass or sheet brass escutcheons, solid or split hinged.

3. Pipe Escutcheons for Dry Areas: Provide stainless steel escutcheons, solid or split hinged.

C. Low Pressure Y-Type Pipeline Strainers:

1. Provide strainers full line size of connecting piping, with ends matching piping system materials. Select strainers for 125% of the working pressure of piping system, with Type 304 stainless steel screens, with 3/64" perforations at 233 0.045" perforations per square inch.

2. Threaded ends, 2" and smaller: Cast-iron body, screwed screen retainer with centered blowdown fitted with hose bibb. Sarco, Wheatley or Mueller.

3. Flanged ends, 2-1/2" and larger: Cast-iron body, bolted screen retainer with off-center blowdown fitted with hose bibb. Sarco, Wheatley or Mueller.

4. <<Grooved ends 2 ½ and larger: Ductile iron body, bolted screen retainer with off center blowdown fitted with hose bibb. Victaulic or Gustin-Bacon.>>

D. Drip Pans:

1. Provide drip pans fabricated from 16-gauge galvanized sheet metal with watertight joints, and with edges turned up 2-1/2". Reinforce top by structural angles. Provide hole, gasket, and flange at low point for watertight joint and 1" copper drain line connection. Extend 1” drain to nearest approved receptor.

E. Dielectric Unions:

1. Provide standard products recommended by manufacturer for use in service indicated, which effectively isolate ferrous from non-ferrous piping (electrical conductance), prevent galvanic action, and stop corrosion.

F. Dielectric Flanges: Provide dielectric flanges for flanged transitions between dissimilar metal piping. Watts Series 3100 or approved equal.

G. Unions:

1. Unions shall be of type specified in following schedule:

a. Black Steel, 2" and smaller: 250 lb. screwed malleable iron, ground joint, brass to iron seat.
b. Black Steel, 2-1/2" and larger: 150 lb. cast iron screwed flanged, flat faced, full faced gasket.

c. Soldered Copper or Brass Pipe, 2" and smaller: 150 lb. cast bronze or copper, ground joint, non-ferrous seat with soldered ends.
d. Screwed Copper or Brass Pipe, 2" and smaller: 150 lb. cast brass, ground joint, brass to brass seat, with threaded ends.
e. Flanged Copper or Brass Pipe, 2-1/2" and larger: two (2) 150 lb. cast bronze flanges.
f. Manufacturer: EPCO, Mueller, Stanley G. Flagg or Watts.

H. Flanges:

1. Provide flanges at flanged connections to equipment, tanks and valves. Faces of flanges being connected shall be alike in all cases. Connection of raised-face flange to flat-faced flange not permitted.

2. Use ASTM A307, Grade B, bolts and nuts for cast iron flanges and ASTM A193 for steel flanges. Regular square head unfinished bolts with heavy semi-finished hex nuts ASTM A194. Cadmium plated where exposed to weather. Rating: 150 lb. or 300 lb. in high pressure portions.
3. Type of pipe and corresponding flanges as follows:

a. Screwed Black Steel Pipelines: 125 lb. black cast iron screwed flange, flat faces.
b. Welded Steel Pipe, 150 lb. black forges steel welding flanges, 1/16" raised fact ASTM A181 Grade I. Use flat face when connected to flat faced companion flange.

I. Pipe Sleeves:

1. Provide fire proof sleeve assemblies utilizing UL rated sealant systems at all fire rated penetrations. For non-rated sleeve penetrations pack the annular space between the pipe and sleeve with fiberglass and/or mastic.

2. Sleeves shall provide a minimum ½" annular clearance around pipe.

3. Sheet metal: Fabricate from galvanized sheet metal; round tube closed with snaplock joint, welded spiral seams, or welded longitudinal joint. Fabricate from the following gauges: 3" and smaller, 20 gauge; 4" to 6", 16 gauge; over 6", 14 gauge.

4. Steel pipe: Fabricate from Schedule 40 galvanized steel pipe; remove burrs.

5. Iron pipe: Fabricate from cast iron or ductile-iron pipe; remove burrs.

6. Plastic and copper pipe: Fabricate from Schedule 80 PVC plastic pipe; remove burrs.

7. Sleeves through interior concrete walls and floors: Telescopic, submerged, adjustable sleeves by Adjust-to-Crete, AMI or Shamrock. Floor sleeves to extend a minimum of 1” above finished floor.

8. Through exterior walls and floor on grade: 150-pound class cast-iron pipe sleeve. Where waterproof membranes are used, provide membrane clamps. For insulated piping, sleeve diameter shall not be less than diameter of insulated pipe.

J. Sleeve Seals:

1. All sleeves shall be sealed to prevent intrusion of moisture, dust or insects.

2. Underground: For sleeves passing through exterior or foundation walls, provide mechanical link seal assembly.

3. Aboveground: For sleeves passing through walls or floors provide a non-toxic 3-hour rated fire resistant silicone foam sealant with a Flame Spread Rating of 20. Sealant to be tested and approved under UL 263, ASTM E119, and NFPA 251 Standards. All fire rated penetrations shall be sealed with approved UL System.

4. Local Approvals: All seals to be provided shall be in accordance with the regulations of all governing agencies of the city, county, and State Fire Marshal's Office.

K. Valve Boxes: Concrete body, cast iron cover with vandal resistant screws, extensions as required to extend full depth to valve. Valve box cover lettering shall correspond to the valve service, "Water", "Gas", "Fire", "Sewer", etc. Christy #G8 or equal.

2.10 PIPE COATING

A. All underground steel and copper pipe fittings, and all above ground steel and copper pipe and fittings in corrosive air environments shall be covered with one of the following methods:

1. Twice Wrap 20 Mil. Scotch Wrap PVC No. 51, 50% overlap.

2. Prefabricated extruded plastic cover with joints sealed with two coats of 20 Mil. Scotch Wrap No. 51 or Pasco Wrap 20 mil weight.

2.11 GAS CONNECTORS

A. General Areas: CSA rated, UL listed, braided stainless steel gas hose of size and capacity to meet appliance input requirements.

B. Gas connectors for outdoor applications shall be listed for exterior use.

2.12 EXPANSION COMPENSATORS

A. General: Pipe expansion, in general, is to be absorbed in bends, swing joints, expansion loops, and offsets. All piping mains, branches and runouts shall be installed to allow for free expansion and contraction without developing leaks or undue stressing of pipe. Stresses shall be within allowable limits of ASME B31.1 for pressure piping. Vertical piping for domestic hot water, chilled water, heating water, steam and steam condensate shall be provided with expansion joints at each floor. Expansion products to conform to the standards of the Expansion Joint Manufacturer's Association. Expansion joints shall not required packing. Installer shall select materials and pressure/temperature ratings to suit intended service. Select packless expansion joints to provide 150% absorption capacity of calculated maximum piping expansion between anchors. All connections shall have ends to match piping system application.

B. Expansion Compensators (Pipe Compression and Extension): Multiple stainless steel bellows and stainless steel liner with shroud and end fittings. Keflex #311 series or approved equal.

C. Flexible Expansion Joint/Seismic Connector for Steel Pipe: Stainless steel hose and braid, 180° return, CSA approved, and end fittings. Metraflex #Metraloop or approved equal.

D. Flexible Connection for Steel Pipe (Piping and Equipment Located Outside the Building): Stainless steel hose and braid, with threaded or flanged ends. Metraflex #SST or approved equal.

E. Flexible Connection for Copper Pipe: Bronze hose and braid, copper tube ends. Metraflex #BBS or approved equal.

1. For non-critical pump connections. Furnish with fluorelastomer tube and cover to ASTM D2000 Grade 1HK710. The body shall be reinforced with rectangular body rings and six bias plies of fiberglass/kevlar fabric rated 190#/26" vacuum at 250°F. Provide galvanized flat (not L shaped) back up rings and control rods to limit maximum axial extension. Garlock #206 EZ-FLO or approved equal.

2. Flexible Ball Pipe Joints: Provide flexible ball pipe joints where indicated for piping systems, with materials and pressure/temperature ratings selected by installer to suit intended service. Design joints for 360° rotation, and with minimum of 50° angular flexing movement for sizes ¼" to 4". Provide two composition gaskets for each joint. Barco or approved equal.

F. Pipe Alignment Guides: Provide pipe alignment guides on both sides of expansion joints, and elsewhere as indicated on drawings. Guide shall be of carbon steel construction with split guiding cylinder and integral anchor base and internal four finger two-piece spider. Cylinder wall thickness shall be equal to schedule 40 wall thickness of pipe being guided. Spider shall be capable of clamping directly to pipe and moving only in an axial direction while inside cylinder. Anchoring directly to building substrate. Metraflex #Style IV or equal.

G. Expansion Loops: Provide field fabricated pipe expansion loops as detailed on the drawings or in place of mechanical expansion joints.

PART 3 - EXECUTION

3.1 GENERAL

A. Workmanship shall be performed by licensed journeymen or master mechanics and shall result in an installation consistent with the best practices of trades.

B. Install work uniform, level and plumb, in relationship to lines of building. Do not install any diagonal, or otherwise irregular work unless so indicated on Drawings or approved by Architect.

3.2 MANUFACTURER'S DIRECTIONS

A. Follow manufacturers' directions and recommendations in all cases where the manufacturers of articles used on this Contract furnish directions covering points not shown on the Drawings or covered in these Specifications.

3.3 INSTALLATION

A. Coordinate the work between the various Plumbing Sections and with the work specified under other Divisions of the work or contracts toward rapid completion of the entire project. If any cooperative work must be altered due to lack of proper supervision or failure to make proper provisions in time, then the work hereunder shall include all expenses of such changes as are necessary in the work under other contracts, and such changes shall be directly supervised by and made to the satisfaction of the Engineer.

B. The cooperative work not included in the Plumbing Division related to the general construction work is as follows:

1. All formed concrete work.

2. Framed openings in masonry and other Architectural and Structural elements.

3. Wood grounds and nailing strips in masonry and concrete.

4. Sloping of floors to drains and floor sinks.

5. Sloping of roof-to-roof drains and overflow drains.

C. Inspect all material, equipment, and apparatus upon delivery and do not install any that may be subject to rejection as a result of damage or other defects. Provide tarps and visqueen cover to protect equipment and piping delivered to and stored at the site.

3.4 WORKING PRESSURES

A. All fittings, valves, pipe, specialties equipment shall be rated for the working pressure subjected in the installed locations.

B. Drawings indicate working pressure in each system. The rating of the equipment and material shall not be less than that of the system pressures.

C. Low pressure, 0.5 psig (14 inch Water Column) or less, Natural Gas Systems: Use 1/2 to 2-inch NPS: Gastite corrugated stainless steel tube and brass fittings.

D. Medium pressure, over 0.5 psig (14 inch Water Column) up to 5 psig, Natural Gas Systems: Use 1/2 to 2-inch NPS: Gastite corrugated stainless steel tube and brass fittings.

3.5 PIPES SIZES TO EQUIPMENT

A. General: Pipe sizes indicated shall be carried full size to equipment served. Any change of size to match equipment connection shall be made within one foot of equipment.

B. At temperature control valves with sizes smaller than connected lines, reduction shall be made immediately adjacent to valve.

3.6 PIPING INSTALLATION

A. General: Install pipes and pipe fittings in accordance with recognized industry practices which will achieve permanently leakproof piping systems, capable of performing each indicated service without piping failure. Install each run with minimum joints or couplings, but with adequate and accessible unions for disassembly and maintenance or replacement of valves and equipment. Reduce sizes (where indicated) by use of reducing fittings. Align piping accurately at connections, within 1/16" misalignment tolerance. Comply with ASME B31 Code for Pressure Piping.

B. Locate piping runs, except as otherwise indicated, vertically and horizontally (pitched to drain) and avoid diagonal runs wherever possible. Orient horizontal runs parallel with walls and column lines. Locate runs as shown or described by diagrams, details, and notations or, if not otherwise indicated, run piping in shortest route which does not obstruct space or block access for servicing building and its equipment. Hold piping close to walls, overhead construction, and other structural and permanent-enclosure elements of building. Limit clearance to 1/2" where furring is shown for enclosure or concealment of piping, but allow for insulation thickness, if any. Where possible, locate insulated piping for 1" clearance outside insulation. Whenever possible in finished and occupied spaces, conceal piping from view, by locating in column enclosures, in hollow wall construction, or above suspended ceilings. Do not encase horizontal runs in solid partitions, except as indicated.

C. Elevator Machine Rooms, Switchgear, Generator, Telecommunications, Telephone Rooms, and Electrical Equipment Spaces: Do not run piping through transformer vaults and other electrical or electronic equipment spaces and enclosures unless unavoidable. Install drip pan under piping that must be run through electrical spaces. Route drip pan drain piping to floor drain, floor sink or other approved receptor.

3.7 WELDING

A. Qualifications of Welders: Welders performing work under this Contract shall be certified and qualified in accordance with tests prescribed by the National Certified Welding Bureau (NCWB) or by other approved test procedures using methodology and procedures covered in the ASME Boiler and Pressure Vessel Code, Section IX, "Qualification Standard for Welding and Brazing Procedures, Welders, Brazers, and Welding and Brazing Operators". Installation shall conform to ANSI 31.1 "Power Piping".

1. Submit for approval the names, identification, and welder's assigned number, letter or symbol of welders assigned to this project.

2. The assigned identification symbol shall be used to identify the work of each welder and shall be indelibly stamped immediately upon completion of each weld.

3. Welders shall be tested and certified for all positions.

4. Submit identifying stenciled test coupons made by each operator.

5. Any or all welders may be required to retake welding certification tests without additional expense.

6. When so requested, a welder shall not be permitted to work as a welder on this project until he has been recertified in accordance with NCWB.

7. Recertification of the welder shall be made after the welder has taken and passed the required tests.

8. Where piping 1-1/2 inches and smaller is butt or socket welded, submit 3 samples of test welds for approval.

3.8 PIPING SYSTEM JOINTS

A. All piping shall be cut squarely, free of rough edges and reamed to full bore. Piping shall be mechanically cleaned prior to make-up of joints and fully inserted into fittings.

B. Provide joints of type indicated in each piping system.

C. Thread pipe in accordance with ANSI B2.1. Cut threads full and clean using sharp dies. Ream threaded ends to remove burrs and restore full inside diameter. Remove excess cutting oil from piping prior to assembly. Apply pipe joint compound, or pipe joint tape (Teflon) where recommended by pipe/fitting manufacturer, on male threads at each joint and tighten joint to leave not more than 3 threads exposed.

D. Solder copper tube and fitting joints with lead free nickel/silver bearing solder meeting ASTM. B-32, in accordance with IAPMO IS 3-93, ASTM B-828 and Copper Development Association recommended procedures. Joints shall be cleaned by other than chemical means prior to assembly. "Shock" cooling is prohibited. Fluxes shall be applied liberally to the outside of the pipe

and the solder cup of the fitting. Fluxes shall be water soluble for copper and brass potable water applications, and shall meet CDA standard test method 1.0 and ASTM B813-91. Solder shall be applied until a full fillet is present around the joint. Solder and flux shall not be applied in such excessive quantities as to run down interior of pipe. Lead solder or corrosive flux shall not be present at the jobsite.

1. Manufacturers:

   a. Solder: JW Harris "Bridgit" or Englehard "Silvabrite 100".
   b. Flux: Laco "Flux-Rite 90", MW Dunton "Nokorode CDA Flux", Hercules "Fluid Action Solder Flux".

E. Piping shall be capped during construction to prevent entry of foreign material.

F. Weld pipe joints in accordance with recognized industry practice and as follows:

1. Weld pipe joints only when ambient temperature is above 0°F.

2. Bevel pipe ends at a 37.5° angle where possible, smooth rough cuts, and clean to remove slag, metal particles, and dirt.

3. Use pipe clamps or tack-weld joints with 1" long welds, 4 welds for pipe sizes to 10", 8 welds for pipe sizes 12" to 20".

4. Build up welds with stringer-bead pass, followed by hot pass, followed by cover or filler pass. Eliminate valleys at center and at edges of each weld. Weld by procedures which will ensure elimination of unsound or unfused metal, cracks, oxidation, blow-holes, and non-metallic inclusions.

5. Do not weld out piping system imperfections by tack-welding procedures. Refabricate to comply with requirements.

6. At Installer's option, install forged branch-connection fittings whenever branch pipe is indicated, or install regular T-fitting.

G. Flanged Joints: Match flanges within piping system, and at connections with valves and equipment. Clean flange faces and install gaskets. Tighten bolts to provide uniform compression of gaskets.

H. Cast-Iron Joints: Comply with coupling manufacturer's Cast Iron Soil Pipe Institute Standards and installation instructions.

3.9 VALVES

A. General: Except as otherwise indicated, comply with the following requirements:

1. Install valves where required for proper operation of piping and equipment, including valves in branch lines where necessary to isolate sections of piping. Locate valves so as to be accessible and so that separate support can be provided as necessary.

2. Install valves, except butterfly valves, with stems pointed up, in vertical position where possible, but in no case with stems pointed downward from horizontal plane without prior written approval. Install valve drains with hose-end adapter for each valve that must be installed with stem below horizontal plane.

3. Install butterfly valves with stems mounted horizontally.

4. All valves mounted higher than 7' above floor in mechanical rooms and where indicated shall be installed with stem horizontal and equipped with chain wheels and chains extending to 6' above floor.

5. Provide Seismic shut off valve on gas main downstream of meter.

B. Insulation: Where insulation is indicated, install extended-stem valves, arranged in proper manner to receive insulation.

C. Selection of Valve Ends (Pipe Connections): Except as otherwise indicated, select and install valves with the following ends of types of pipe/tube connections:

1. Copper Pipe, 2-1/2" and Smaller: Soldered-joint valves.

2. Steel Pipe, 2" and Smaller: Threaded joint valves.

3. Larger Pipe Sizes: One of the following, at installer's option:

a. Flanged valves.
b. Lug valves.

D. Non-Metallic Disc: Limit selection and installation of valves with non-metallic discs to locations indicated and where foreign material in piping system can be expected to prevent tight shutoff of metal seated valves.

E. Renewable Seats: Select and install valves with renewable seats, except where otherwise indicated.

F. Fluid Control: Except as otherwise indicated, install gate, ball, plug, circuit setter, globe, and butterfly valves to comply with ASME B31.9.

G. Swing Check Valves: Install in horizontal position with hinge pin horizontally perpendicular to center line of pipe. Install for proper direction of flow.

H. Wafer Check: Install between 2 flanges in horizontal or vertical position.

I. Ball Valve: Ball valve used on gas systems shall be UL listed, CSA approved for pressure of system, no exception.

J. Valve Adjustment: After piping systems have been tested and put into service, but before final testing, adjusting, and balancing, inspect each valve for possible leaks. Adjust or replace packing to stop leaks, replace valve if leak persists.

K. Valve Identification: Tag each valve in accordance with "Mechanical Identification" section.

L. Cleaning: Clean factory-finished surfaces. Repair marred or scratched surfaces with manufacturer's touch-up paint.

3.10 TEMPERATURE GAUGES

A. General: Install temperature gauges in vertical upright position, and tilted so as to be easily read by observer standing on floor without supplemental illumination. All gages to be installed with snubbers to absorb system shock.

B. Install in the following locations, and elsewhere as indicated:

1. At outlet of hot water heaters.

3.11 MECHANICAL SLEEVE SEALS

A. Loosely assemble rubber links around pipe with bolts and pressure plates located under each bolt head and nut. Push into sleeve and center. Tighten bolts until links have expanded to form a watertight seal.

B. Fire Barrier Penetration Seals: Fill entire opening with sealing compound in compliance approved and listed UL system number. Adhere to manufacturer's installation instructions.

3.12 SUPPORTS AND HANGERS (SEE 15050)

3.13 EQUIPMENT RAILS AND PIPE PORTALS

A. Install per manufacturer's instructions.

B. Coordinate with other trades so units are installed when roofing is being installed.

C. Verify roof insulation thickness and adjust raise of cant to match.

3.14 VIBRATION CONTROL ISOLATORS

A. Comply with minimum static deflections recommended by ASHRAE, for selection and application of vibration isolation materials and units as indicated.

B. Manufacturer's Recommendations: Except as otherwise indicated, comply with manufacturer's recommendations for selection and application of vibration isolation materials and units.

C. Except as otherwise indicated, comply with manufacturer's instructions for installation and load application to vibration control materials and units. Adjust to ensure that units have equal deflection, do not bottom out under loading, and are not short-circuited by other contacts or bearing points. Remove space blocks and similar devices intended for temporary support during installation.

D. Install units between substrate and equipment as required for secure operation and to prevent displacement by normal forces, and as indicated.

E. Adjust leveling devices as required to distribute loading uniformly onto isolators. Shim units as required where substrate is not level.

F. Flexible Pipe Connectors: Install on equipment side of shutoff valves.

G. Upon completion of vibration control work, prepare report showing measured equipment deflections for each major item of equipment as indicated.

H. Clean each vibration control unit, and verify that each is working freely, and that there is no dirt or debris in immediate vicinity of unit that could possibly short-circuit unit isolation.

3.15 EXPANSION LOOPS

A. Expansion Loops: Fabricate expansion loops as indicated, in locations indicated, and elsewhere as determined by installer for adequate expansion of installed piping system. Subject loop to cold spring which will absorb 50% of total expansion between hot and cold conditions. Provide pipe anchors and pipe alignment guides as indicated, and elsewhere as determined by installer to properly anchor piping in relationship to expansion loops.

B. Expansion Compensation for Risers and Terminals: Install connection between piping mains and risers with at least five pipe fittings including tee in main. Install connections between piping risers and terminal units with at least four pipe fittings including tee in riser.

3.16 EXPANSION COMPENSATORS

A. Install as noted on plans. Where plans do not indicate spacing of guides or other pertinent information, install per manufacturer's recommendations.

3.17 EXCAVATION AND BACKFILL

A. Underground piping shall be installed in stable, open trench work. Trench excavations shall be a minimum of 16” wide, true to line and grade. Contractor shall exercise all due shoring and safety procedures. No stones larger than 1” may be present in the trench to a minimum depth of 4” below the trench bottom. The trench shall be free of job site debris, and free of corrosive media. Pipe crown shall be not less than 24” below the finished ground surface for metallic pipe, and 30” for non-metallic pipe, unless otherwise indicated on the drawings or directed by the Architect. Trenches shall be kept free of excess moisture, and shall be kept open for only a short a time as necessary for installation, testing and inspection. Dispose of surplus excavation and seepage water as directed by the Architect.

B. Piping shall be properly bedded and backfilled over stable trench bottom to a level of at least 12” above the pipe crown with thin layers of unwashed sand, dampened but not puddle, and free of organic or corrosive materials and excessive moisture. Backfill shall be placed in thin layers not to exceed 6” and tamped by mechanical tampers to a minimum 90% Modified Proctor Density, in accordance with ASTM D-1557-58T. trenches shall be backfilled to a minimum depth of 36” prior to being wheel loaded. Replace to their original condition all turf, plants, concrete, asphalt, or other improvements which constitute landscaping, traffic areas or other improved areas which become disturbed by excavation. In graded and undeveloped areas, in addition to procedures specified above, backfill trenches with crown 8” above the surrounding surface.

C. Excavated and backfill in soils of unstable nature shall be provided as directed by Architect.

3.18 PIPE INSPECTIONS

A. It is the intent of the Contract Documents that systems be inspected at completion of each phase while under tests required for administrative authorities, and prior to concealment, i.e. “Rough-in” “top-out” and final.

B. Inspection – Below Grade: All piping installed below grade shall be inspected prior to burial by the Architect, the Owner’s Representative or the Engineer. Contractor must notify Architect no less than 24 working hours prior to inspection time. Should the piping be buried prior to inspection the contractor may be requested to uncover the piping at no delay to the project and at no additional cost to the Owner.

C. Inspection – Above Grade: All piping installed above grade shall be made available for inspection upon completion and prior to finish of walls and ceilings. Notify the Architect, the Owner's Representative or the Engineer. Contractor must notify Architect no less than 24 working hours prior to the desired inspection time. Should the piping be hidden within the structure prior to inspection the contractor may be requested to uncover the piping at no delay to the project and at no additional cost to the Owner.

3.19 CLEANING, FLUSHING, DISINFECTING

A. General: Clean exterior surfaces of installed piping systems of superfluous materials, and prepare for application of specified coatings (if any).

B. Flush out piping systems with clean water before proceeding with required tests. Inspect each run of each system for completion of joints, supports, and accessory items.

C. Inspect pressure piping in accordance with procedures of ASME B31.

D. Disinfect water mains and water service piping in accordance with Section 220501.

3.20 TESTING

A. Provide all tests specified hereinafter and as otherwise required. Provide all test equipment, including test pumps, gauges, instruments, and other equipment required. Test all rotational equipment for proper direction of rotation. Upon completion of testing, certify to the Architect, in writing, that the specified tests have been performed and that the installation complies with the specified requirements and provide a report of the test observations signed by qualified inspector.

B. Piping: Remove from the system, during testing, all equipment which would be damaged by test pressure. Replace removed equipment when testing has been accomplished. The system may be tested in sections as the work progresses; however, any previously tested portion shall become a part of any latter test of a composite system. Correct leaks by remaking joints with new material.

C. Test time will be accrued only while full test pressure is on the system, unless indicated otherwise. "Tolerance" shall be no pressure drop, except that due to temperature change in a 24-hour period. Inspect and test all work prior to burying or concealing. Test pressure shall be one and one-half times the system operating pressure or the listed test pressure below, whichever is greater:

System	Test Medium	Test Pressure	Tolerance-Test Period
Domestic Water	Water	150 psig	None – 8 hours
Soil and Waste	Water	10 ft head, 5 psi	No leaks – 8 hours
Vent	Water	Top of Vent Terminal	No leaks – 8 hours
Storm	Water	Top of Roof Drain	No leaks – 8 hours
Natural Gas/Propane	Air or Nitrogen	100 psig	None – 24 hours

D. Final Drainage, Waste and Vent Test: Upon project closeout, Contractor shall perform and certify that the DWV system has passed the following test:

1. After all plumbing fixtures have been installed and their traps filled with water, all vent terminals and building drains shall be closed and a U-tube water manometer shall be inserted into the trap of water closet and an air compressor testing apparatus shall be attached to any suitable opening. An air pressure of 1" water column as indicated on the manometer shall be introduced into the system. The pressure shall hold constant for a period of 15 minutes

without the introduction of additional air. Leaks revealed during this test may be located by smoke test of other recognition methods.

E. Valves: Test all valve bonnets for tightness. Test operate all valves at least once from closed-to-open-to-closed position while valve is under test pressure. Test all automatic valves, including solenoid valves, and temperature and pressure relief valves, safety valves, and temperature and pressure relief valves not less than three (3) times.

F. Piping Specialties: Test all thermometers, pressure gauges, and water meters for accurate indication; automatic water feeders, air vents, trap primers, and vacuum breakers for proper performance. Test all air vent points to ensure that all air has been vented.

G. Backflow Preventers: Each testable backflow prevention device shall be tested and approved by certified testers after installation. Submit test results.

END OF SECTION

SECTION 222123

PUMPS AND SPECIALTIES

PART 1 - GENERAL

1.01 APPLICABLE REQUIREMENTS

A. All work to be furnished and installed under this section shall comply with all the requirements of General Conditions, Supplemental Conditions, Division 01 - General Requirements, and Section 220500 - Basic Materials and Methods, and other Sections in Division 22 specified herein.

1.02 SCOPE

A. All work to be furnished and installed under this Section shall comply with all the requirements of Division 01, and shall include, but not necessarily be limited to, the following:

1. Domestic hot water recirculating pumps

1.03 RELATED WORK SPECIFIED ELSEWHERE

A. Section 220500: Basic Materials and Methods

B. Section 220700: Plumbing Insulation

C. Section 220501: Plumbing

D. Section 222113: Plumbing Piping

E. Section 221123: Plumbing Equipment

F. Section 224000: Plumbing Fixtures

G. Division 26: Electrical

1.04 QUALITY ASSURANCE

A. Manufacturer's Qualifications: Provide systems that are the standard product of an equipment manufacturer regularly engaged in the production of such units who issues complete catalog information on such products.

B. Codes and Standards: Provide pumps which conform to the requirements of:

1. Hydraulic Institute (HI): Manufacturer pumps in accordance with "Standards for Centrifugal Rotary and Reciprocating Pumps."
2. National Electrical Manufacturers Association (NEMA): Provide electrical components which comply with NEMA Standards.
3. National Fire Protection Association (NFPA):

a. 70: National electrical Code

4. Underwriters Laboratories (UL):

a. UL-778: Motor Operated Water Pumps

1.05 SUBMITTALS

A. Product Data: Submit manufacturer's technical product data for units showing dimensions, weights (shipping, installed, and operating), capacities, ratings, performance with operating point clearly indicated, motor electrical characteristics, finishes of materials, and installation instructions.

1. Parallel pump plots: For all parallel and series pump applications submit a combined pump curve showing parallel pump operation and single pump non-overloaded operation verifying that the pump selections operate non-overloading on curve in a single pump operation.

2. Submittal information to verify all scheduled characteristics are met including efficiency.

B. Shop Drawings: Submit manufacturer's shop drawings indicating dimensions, weight (shipping, operating), required clearances, methods of assembly of components, and location and size of each field connection.

C. Maintenance Data: Submit maintenance instructions, including instructions for lubrication, tube replacement, motor and drive replacement, and spare parts lists. Include this data, product data, shop drawings, and wiring diagrams in operating and maintenance manuals.

D. Wiring Diagrams: Submit manufacturer's ladder-type wiring diagrams for power and control wiring required. Differentiate between factory-installed and field-installed wiring.

1.06 DELIVERY, STORAGE, AND HANDLING

A. Deliver units to the site in containers with manufacturer's stamp or label affixed.

B. Store and protect products and units against dirt, water, chemical, and mechanical damage. Do not install damaged units - remove from project site.

C. Rigging: Comply with the manufacturer's rigging and installation instructions.

1.07 WARRANTY

A. Provide general one year (12 months) warranty. The warranty shall include parts, labor, travel costs, and living expenses incurred by the manufacturer to provide factory authorized service.

PART 2 - PRODUCTS

A. Hydropneumatic Tank: A tank shall be included by booster skid manufacturer. Tank shall be a full acceptance replaceable bladder style and include a union isolation valve, tank drain and pressure gauge. Tank shall be shipped loose for field installation as indicated on the plans.

B. Warranty: The system shall be warranted (including parts and labor) for a period of 12 months from the date of start-up.

C. Manufacturer: Syncro Flo, Federal, Weil, Paco, Taco or Bell & Gossett.

2.02 HOT WATER RECIRCULATING PUMPS

A. Furnish and install pumps with capacities as shown on plans. Pumps shall be in-line type for installation in vertical or horizontal piping. Pump must be capable of being serviced without disturbing piping connections.

B. Pump body shall be of all bronze construction, rated 175 psi working pressure, with gauge ports at nozzles, and with vent and drain ports.

C. Impeller shall be non-ferrous material, enclosed type, dynamically balanced, keyed to the shaft and secured by a locking capscrew or nut.

D. The liquid cavity shall be sealed off at the motor shaft by an internally-flushed mechanical seal with ceramic seal seat, and carbon seal ring, suitable for continuous operation at 225° F. A non-ferrous shaft sleeve shall completely cover the wetted area under the seal.

E. Pump bearing bracket shall have oil lubricated bronze journal and thrust bearings. Bracket shaft shall be alloy steel having ground and hardened thrust bearing faces. A flexible coupling to dampen starting torque and torsional vibration shall be employed.

F. Motor shall meet NEMA specifications and shall be the size, voltage and enclosure called for on the plans.

G. Each pump shall be factory tested. It shall then be thoroughly cleaned and painted with at least one coat of high-grade machinery enamel prior to shipment.

H. Provide H-O-A switch with overload protection. Pump shall be controlled by an aquastat on the return line and a flow switch on the cold water makeup. Wiring between switch and pump provided under Division 22, as stated in Section 220500.

I. Manufacturer: ITT Bell and Gossett Series 60, TACO, Thrush or Grundfos.

2.03 EXPANSION TANKS

A. Atmospheric:

1. General: Tanks shall be constructed from carbon steel, in conformance with the requirements of ASME Code for a working pressure of 150 psi. Tank shall be fitted with Airtrol tank fitting, an air-charging connection, drain valve, gauge glass, and shall include all tappings and supports. After fabrication all external surfaces of the tank shall be thoroughly cleaned and finished with one coat of air dry enamel.

2. Size and capacity as shown on drawings. Provide reducing valve and accessories as noted on plans or schedules.

3. Manufacturer: Bell & Gossett, TACO, Wheatley or approved equal.

B. Diaphragm Type Pre-pressurized:

1. The pressurization system shall include a diaphragm-type expansion tank which will accommodate the expanded water of the system generated within the normal operating

temperature range, limiting this pressure increase at all components in the system to the maximum allowable pressure at those components. It shall maintain minimum operating pressure necessary to eliminate all air. The only air in the system shall be the permanent sealed-in air cushion contained in the diaphragm-type tank.

2. The expansion tank shall be welded steel, constructed, tested and stamped in accordance with Section VIII of the ASME Code for a working pressure of 125 psi and precharged to the minimum operating pressure.

3. The manufacturer shall be Wessels, Amtrol or approved equal with at least five years experience in the fabrication of diaphragm-type ASME expansion tanks.

PART 3 - EXECUTION

3.01 INSTALLATION

A. All equipment, unless otherwise shown or noted on the Drawings, is to be installed in accordance with industry standards and manufacturer's recommended installation instructions.

B. Provide vibration isolation, inertia bases, seismic snubber, flexible pipe connections, etc, as specified in related specification sections.

C. Contractor to assist testing and balancing contractor in verifying correct pump rotation and system operation.

D. Flush and clean equipment, in accordance with manufacturer's start-up instructions, and in presence of manufacturer's representative. Test controls and demonstrate compliance with requirements. Replace damaged or malfunctioning controls.

E. Isolation for Service: Provide pump installations with a discrete isolation valve on both the supply and intake side of the pump to permit service of the pump and any related strainer, check or balancing valves. Triple duty valves are not equivalent for this shut-off service.

F. Balancing Coordination and Impeller Trimming: Coordinate final pump flow with test and balance contractor. For pumps larger than 5 horsepower, if the system tests and balance indicate that flow exceeds the specified flow by greater than 20%, it is not acceptable to reduce flow merely by adjusting balance valves to create additional head or reducing VFD peak flows. Excess system flow must be reduced by trimming the impeller to match the load.

3.02 MANUFACTURER'S START-UP SERVICES

A. The manufacturer shall provide start-up service in the form of a factory trained service technician. The service technician shall verify correct installation, verify pump systems mounting, verify piping installation, verify control wiring, verify power wiring, and check for proper operation. The service technician shall provide final adjustments to meet the specified performance requirements. Fully staffed parts and service personnel shall be within four hours travel from the jobsite.

END OF SECTION

SECTION 220000

PLUMBING FIXTURES

PART 1 - GENERAL

1.01 APPLICABLE REQUIREMENTS

A. All work to be furnished and installed under this section shall comply with all the requirements of General Conditions, Supplemental Conditions, Division 01 - General Requirements, and Section 220500 - Basic Materials and Methods, and other Sections in Division 22 specified herein.

1.02 SCOPE

A. All work to be furnished and installed under this section shall include, but not necessarily be limited to, the installation of plumbing fixtures and trim.

1.03 RELATED WORK SPECIFIED ELSEWHERE

A. Section 220500: Basic Materials and Methods

B. Section 220700: Plumbing Insulation

C. Section 220501: Plumbing

D. Section 222113: Plumbing Piping

E. Section 222123: Pumps and Specialties

F. Section 221123: Plumbing Equipment

G. Division 26: Electrical

1.04 SUBMITTALS

A. Prior to construction submit for approval all materials and equipment in accordance with Division 01. Submit manufacturer's data, colors, installation instructions, and maintenance and operating instructions for all components of this section including, but not limited to, the following:

1. Plumbing fixtures.

2. Piping specialties.

3. Toilets.

4. Urinals.

5. Lavatories.

6. Sinks.

7. Showers.

8. Drinking fountains.

B. Shop Drawings: Submit rough-in drawings. Detail dimensions, rough-in requirements, required clearances, and methods of assembly of components and anchorages. Coordinate requirements with Architectural Woodwork shop drawings specified in Division 06 for fixtures installed in countertops and cabinets. Furnish templates for use in woodwork shop.

C. Samples: Submit samples of any piece of equipment requested by Architect for review and approval.

D. Wiring Diagrams: Submit manufacturer's electrical requirements and wiring diagrams for power supply to units. Clearly differentiate between portions of wiring that are factory installed and field installed portions.

1.05 CODES AND STANDARDS

A. Uniform Plumbing Code (UPC) with State of California Amendments.

B. All fixtures and faucets must meet all requirements of Americans with Disabilities Act (ADA).

C. State Energy Code

D. ARI Standard 1010: “Drinking Fountains and Self-Contained Mechanically Refrigerated Drinking Water Coolers.”

1.06 DELIVERY, STORAGE, AND HANDLING

A. Deliver units to the site in containers with manufacturer's stamp or label affixed.

B. Store and protect products against dirt, water, chemical, and mechanical damage. Do not install damaged products. Remove damaged products from project site.

1.07 MAINTENANCE

A. Extra Stock:

1. Furnish special wrenches and other devices necessary for servicing plumbing fixtures, flush valves, and trim to Owner with receipt in a quantity of one device for each 10 fixtures.

2. Furnish faucet repair kits complete with all necessary washers, springs, pins, retainers, packings, o-rings, sleeves, and seats in a quantity of 1 kit for each 10 faucets.

PART 2 - PRODUCTS

2.01 GENERAL

A. Provide fixtures as specified. Fixtures in any secure or public areas shall be vandal proofed.

B. Architect/Engineer shall review and approve any substitution requested by Contractor prior to bid submittal.

C. Provide fixture as specified, acceptable manufacturers:

1. Vitreous China or Cast Iron Fixtures: American Standard, Eljer, Zurn or Kohler.

2. Stainless Steel Sinks: Elkay or Just
   a. All stainless steel is 18 gauge, type 304 unless otherwise specified.

3. Drinking Fountains: Oasis or Haws.

4. Terrazzo Service Sinks: Florestone or Stern Williams.

5. Showers enclosures: Lasco, Fiber Fab, Aquaglass and Aqua Bath.

D. Provide faucet as specified. Acceptable manufacturers: Chicago Faucets, Zurn, Symmons, T and S or as indicated.

E. Provide a thermostatic mixing valve conforming to ASSE 1070 for all public lavatories.

F. Provide flush valve as specified. Acceptable manufacturers: Sloan, American Standard or Zurn.

G. Provide commercial grade toilet seat as specified. Acceptable manufacturers: Beneke, American Standard, Church or Olsonite.

H. Provide heavy-duty cast iron commercial grade carrier as specified. Provide compact carriers where space is limited. Acceptable manufacturers: Ancon, Jay R. Smith, Wade or Zurn. No plastic parts on foundry items.

1. Wall hung water closet: J.R. Smith figs: 0210L/RY-M12, 0210DY-M12, 0240L/RY-M12, 0240DY-M12, 0410R/LY-M12 and 0410DY-M12.

2. Wall hung urinal: J.R. Smith fig: 0634-M12 or Zurn Z-1221-58.

3. Wall hung lavatory: J.R. Smith fig: 0700(D) –M31 concealed arm carrier.

I. Provide heavy duty commercial grade 17-gauge P-Trap and supplies with stops as specified. Provide heavy duty commercial grade lavatory supplies. Provide supplies meeting AB1953 no lead requirements. Supplies shall be ½"x 3/8" x 12" ground joint flexible riser with loose key angle stop with chrome plates I.P.S. brass nipple. Sink supplies shall be ½" x 12" ground joint flexible riser with loose-key angle stop with chrome plated I.P.S. brass nipple. Provide bell type escutcheons for both P-trap and supplies. Acceptable manufacturers: Zurn, Brasscraft, Chicago, or McGuire.

1. P-trap - Lav: McGuire C8902-DF or Zurn Z-8701.

2. P-trap - Sink: McGuire C8912-DF or ZurnZ-8702.

3. Supply for Lavatory: McGuire LFH2165LK or Zurn ZH88-XL-LK.

4. Offset supply for barrier free lavatory: McGuire 158 WC.

5. Supply for Sink: McGuire LFH2167LK or Zurn ZH8803-XL-LR.

6. Supply for Water Closet: McGuire H2169LK or Zurn ZH-8807-CR.

7. Escutcheons: McGuire WE00D Series, wrought brass, bell type.

8. Lavatory grid strainer: McGuire 155A or Zurn Z-8743.

9. Barrier-free lavatory offset grid strainer: McGuire 155WC or Zurn 8746.

10. Sink Strainer: Elkay LK-18B.

J. Insulation: provide white molded closed cell vinyl pre-fab insulation on P-Trap and on both hot and cold water supply for barrier free lavatories and sinks. Acceptable manufacturers: Plumberex, True-Bro, and Zurn. Bag type insulators are not acceptable.

PART 3 - EXECUTION

3.01 GENERAL

A. Verify all dimensions by field measurements. Verify that all plumbing fixtures may be installed in accordance with pertinent codes and regulations, the original design, and the referenced standards.

B. Examine rough-in for potable water and waste piping systems to verify actual locations of piping connections prior to installing fixtures.

C. Examine walls, floors and cabinets for suitable conditions where fixtures are to be installed.

D. Install plumbing fixtures level and plumb, in accordance with fixture manufacturer's written instructions, rough-in drawings, and pertinent codes and regulations, the original design, and the referenced standards.

E. Comply with the installation requirements of ADA with respect to plumbing fixtures for the physically handicapped.

F. Fasten plumbing fixtures securely to supports or building structure. Secure supplies behind or within wall construction to provide rigid installation.

G. Install a stop valve in an accessible location in the water connection to each fixture.

H. Install escutcheons at each wall, floor, and ceiling penetration in exposed finished locations and within cabinets and millwork.

I. Seal fixtures to walls and floors using silicone sealant as specified in Division 07. Match sealant color to fixture color.

J. Test fixtures to demonstrate proper operation upon completion of installation and after units are water pressurized. Replace malfunctioning units, then retest.

K. Inspect each installed unit for damage. Replace damaged fixtures.

L. Adjust water pressure at drinking fountains, faucets, shower valves, and flush valves to provide proper flow stream.

M. Replace washers or cartridges of leaking or dripping faucets and stops.

N. Clean fixtures, trim, and strainers using manufacturer's recommended cleaning methods and materials.

O. During construction cover all installed fixtures, sinks, and water coolers with cardboard boxes and wrap with Visqueen.

P. Provide flush valve and faucet support behind wall.

END OF SECTION

SECTION 230500

BASIC HVAC MATERIALS AND METHODS

PART 1 - GENERAL

1.01 APPLICABLE REQUIREMENTS

A. All work under this Section shall comply with the requirements of General Conditions, Supplemental Conditions, Special Conditions and Division 01 - General Requirements, and shall include all Mechanical Sections specified herein.

1.02 SCOPE OF THIS SECTION

A. All work to be furnished and installed under this Section shall comply with all the requirements of Division 01, and shall include, but not necessarily be limited to, the following:

1. Compliance with all codes and standards applicable to this jurisdiction.
2. Shop Drawings for Equipment
3. Coordination Documents
4. Record Drawings
5. Start-up Service and Building Commissioning
6. Instruction, Maintenance, and O & M Manuals
7. Work associated with Delivery, Storage, and Handling of products
8. Work associated with provision of Temporary Facilities
9. Preparation of Posted Operating Instructions
10. Meeting Project Safety and Indemnity requirements
11. Proper Cleaning and Closing
12. Supplying proper Warranty information
13. Supply specified Guarantee documentation
14. Design and provision of Supports and Anchors
15. Pipe Portals
16. Equipment Rails
17. Access Panels and Doors
18. Identification Markers
19. Coordination of Electrical requirements for equipment provided

1.03 DESCRIPTION OF WORK

A. The Contract Documents, including Specifications and Construction Drawings, are intended to provide all material and labor to install complete heating, ventilating, air conditioning systems for the building and shall interface with all existing building systems affected by new construction.

B. The Contractor shall refer to the architectural interior details, floor plans, elevations, and the structural and other Contract Drawings and he shall coordinate his work with that of the other trades to avoid interference. The plans are diagrammatic and show generally the locations of the fixtures, equipment, and pipe lines and are not to be scaled; all dimensions and existing conditions shall be checked at the building.

C. The Contractor shall comply with the project closeout requirements as detailed in General Requirements of Division 01.

D. Where project involves interface with existing building and site systems, every effort has been made to note existing utilities and services. However, the Contractor should thoroughly familiarize themselves with existing conditions and be aware that in some cases information is not available as to concealed conditions, which exist in portions of the existing building affected by this work.

1.04 DESCRIPTION OF BID DOCUMENTS

A. Specifications:

1. Specifications, in general, describe quality and character of materials and equipment.
2. Specifications are of simplified form and include incomplete sentences.

B. Drawings:

1. Drawings in general are diagrammatic and indicate sizes, locations, connections to equipment and methods of installation.
2. Before proceeding with work check and verify all dimensions.
3. Assume all responsibility for fitting of materials and equipment to other parts of equipment and structure.
4. Make adjustments that may be necessary or requested, in order to resolve space problems, preserve headroom, and avoid architectural openings, structural members and work of other trades.
5. Where existing pipes, conduits and/or ducts prevent installation of new work as indicated, relocate, or arrange for relocation, of existing pipes, conduits and/or ducts. Verify exact location and elevation of existing piping prior to any construction.
6. If any part of Specifications or Drawings appears unclear or contradictory, apply to Architect or Engineer for his interpretation and decision as early as possible, including during bidding period.

1.05 DEFINITIONS

A. "Above Grade": Not buried in the ground and not embedded in concrete slab on ground.

B. “Accessible”: Ability to perform recommended maintenance without removal of services or equipment and requiring no special platforms.

C. "Actuating" or "Control" Devices: Automatic sensing and switching devices such as thermostats, pressure, float, electro-pneumatic switches and electrodes controlling operation of equipment.

D. "Below Grade": Buried in the ground or embedded in concrete slab on ground.

E. "Concealed": Embedded in masonry or other construction, installed in furred spaces, within double partitions or hung ceilings, in trenches, in crawl spaces, or in enclosures. In general, any item not visible or directly accessible.

F. "Connect": Complete hook-up of item with required service.

G. "Exposed": Not installed underground or "concealed."

H. "Furnish": To supply equipment and products as specified.

I. "Indicated," "Shown" or " "Noted": As indicated, shown or noted on Drawings or Specifications.

J. "Install": To erect, mount and connect complete with related accessories.

K. "Motor Controllers": Manual or magnetic starters (with or without switches), individual push buttons or hand-off-automatic (HOA) switches controlling the operation of motors.

L. "Piping": Pipe, tube, fittings, flanges, valves, controls, strainers, hangers, supports, unions, traps, drains, insulation, and related items.

M. "Provide": To supply, install and connect as specified for a complete, safe and operationally ready system.

N. "Reviewed," "Satisfactory" or "Directed": As reviewed, satisfactory, or directed by or to Architect/Engineer/Owner.

O. "Rough-In": Provide all indicated services in the necessary arrangement suitable for making final connections to fixture or equipment.

P. "Shall": An exhortation or command to complete the specified task.

Q. "Similar" or "Equal": Of base bid manufacture, equal in materials, weight, size, design, and efficiency of specified products.

R. "Supply": To purchase, procure, acquire and deliver complete with related accessories.

S. “Typical” or “Typ”: Exhibiting the qualities, traits, or characteristics that identify a kind, class, number, group or category. Of or relating to a representative specimen. Application shall apply to all other similarly identified on plan or detail.

T. "Will": A desire to complete the specified task. Allows some flexibility in application as opposed to "Shall."

U. "Wiring": Raceway, fittings, wire, boxes and related items.

V. "Work": Labor, materials, equipment, apparatus, controls, accessories, and other items required for proper and complete installation.

1.06 RELATED WORK SPECIFIED ELSEWHERE

A. All Division 23 Mechanical sections included herein.

B. Division 33: Utility Site Work. <<<<<Coordinate with Civil Engineer>>>>>

1. Coordination of excavation of trenches and the installation of mechanical systems and piping on site.

C. Division 03: Concrete.

1. All concrete work for Mechanical Division shall be included in Division 23 under the appropriate Sections and shall include:
   a. Concrete curbs and housekeeping pads for the mechanical equipment.
   b. Thrust blocks, pads, and boxes for mechanical equipment.
   c. Coordination of floor drain and floor sink installations in sloped floors.

D. Division 07: Thermal and Moisture Protection.

1. Flashing and sheet metal.
2. Sealants and caulking.
3. Firestopping.

E. Division 09: Painting:

1. Division 23 installers shall perform all painting, except where specifically stated otherwise in Division 09.

2. Painting of all exposed steel, piping, ductwork, insulation, equipment and materials.

3. Paint all exposed gas piping, interior and exterior to the building, yellow.

F. Division 10: Miscellaneous Metals.

1. Exterior louvers and grilles shall be included in this Section.

G. Division 26: Electrical is related to work of:

1. Power connections to all mechanical equipment.

H. Division 28: Electronic Safety and Security is related to work of:

1. Fire protection alarms and relays.
2. Smoke detector and monitoring.
3. Life Safety Systems.

1.07 CODES AND STANDARDS

A. The Contractor is cautioned that code requirements not explicitly detailed in these specifications or drawings, but which may be reasonably inferred or implied from the nature of the project, must be provided as part of the contract.

B. Perform all tests required by governing authorities and required under all Division 23 Sections. Provide written reports on all tests.

C. Electrical devices and wiring shall conform to the latest standards of NEC; all devices shall be UL listed and labeled.

D. All mechanical work shall comply with the Americans with Disabilities Act (ADA).

E. All excavation work must comply with all provisions of state laws including notification to all owners of underground utilities at least 48 business day hours, but not more than 10 business days, before commencing an excavation.

F. Provide in accordance with rules and regulations of the following:

1. Building Codes enforced by the Authority Having Jurisdiction in California:
   a. 2010 California Building Code (CBC) based 2009 International Building Code (IBC) with State Amendments.
   b. 2010 California Mechanical Code (CMC) based 2009 Uniform Mechanical Code (UMC) with State Amendments.
   c. 2010 California Plumbing Code (CPC) based 2009 Uniform Plumbing Code (UPC) with State Amendments.
   d. 2010 California Fire Code (CFC) based 2009 International Fire Code (IFC) with State Amendments.
   e. 2010 California Electric Code (CEC) based 2008 National Electric Code with State Amendments.
   f. 2008 Title 24, Part 6 California Energy Efficiency Standards for Residential and Nonresidential Buildings
   g. 2010 California Green Building Standards Code
2. Local, city, county and state codes and ordinances.
3. Local Bureau of Buildings.
4. Local Health Department.
5. Local and State Fire Prevention Districts.
6. California Administrative Code Title 24.

G. Provide in accordance with appropriate referenced standards of the following:

1. NFPA - National Fire Protection Association.
2. AABC - Associated Air Balance Council.
3. CSA - Canadian Standards Association.
4. ADC - Air Diffuser Council.
5. AMCA - Air Moving and Conditioning Association.
6. ANSI - American National Standards Institute.

7. ARI - Air Conditioning and Refrigeration Institute.
8. ASHRAE - American Society of Heating, Refrigerating & Air Conditioning Engineers.
9. ASME - American Society of Mechanical Engineers.
10. ASTM - American Society for Testing Materials.
11. AWS - American Welding Society.
12. FM - Factory Mutual.
13. MSS - Manufacturer's Standardization Society.
14. NEMA - National Electrical Manufacturer's Association.
15. SMACNA - Sheet Metal and Air Conditioning Contractors National Association.
16. UL - Underwriter's Laboratories.
17. ADA - Americans with Disabilities Act.
18. ETL - Electrical Testing Laboratories.

1.08 QUALITY ASSURANCE

A. Manufacturer's Nameplates: Nameplates on manufactured items shall be aluminum or Type 304 stainless steel sheet, not less than 20 USG (0.0375”), riveted or bolted to the manufactured item, with nameplate data engraved or punched to form a non-erasable record of equipment data.

B. Current Models: All work shall be as follows:

1. Manufactured items furnished shall be the current, cataloged product of the manufacturer.

2. Replacement parts shall be readily available and stocked in the USA.

C. Experience: Unless more stringent requirements are specified in other sections of Division 23, manufactured items shall have been installed and used, without modification, renovation or repair, on other projects for not less than one year prior to the date of bidding for this project.

1.09 GENERAL REQUIREMENTS

A. Examine all existing conditions at building site.

B. Review contract documents and technical specifications for extent of new work to be provided.

C. Provide and pay for all permits, licenses, fees and inspections.

D. Prepare a Construction IAQ Management Plan meeting the SMACNA IAQ guidelines. See Section 233113 Air Distribution for a summary of requirements.

E. Install equipment and materials to provide required access for servicing and maintenance. Coordinate the final location of concealed equipment and devices requiring access with final location of required access panels and doors. Allow ample space for removal of all parts that require replacement or servicing. This work shall include furnishing and installing all access doors required for mechanical access.

F. Verify final locations for rough-ins with field measurements and with the requirements of the actual equipment to be connected. Refer to Equipment Specifications in Divisions 02 through 16 for rough-in requirements.

G. Coordinate mechanical equipment and materials installation with other building components.

H. Verify all dimensions by field measurements.

I. Arrange for chases, slots, and openings in other building components to allow for mechanical installations.

J. Coordinate the installation of required supporting devices and sleeves to be set in poured-in-place concrete and other structural components, as they are constructed.

K. Sequence, coordinate, and integrate installations of mechanical materials and equipment for efficient flow of the work. Give particular attention to large equipment requiring positioning prior to closing-in the building.

L. Coordinate the cutting and patching of building components to accommodate the installation of mechanical equipment and materials. Contractor to provide for all cutting and patching required for installation of his work unless otherwise noted.

M. Where mounting heights are not detailed or dimensioned, install mechanical services and overhead equipment to provide the maximum headroom possible.

N. Install mechanical equipment to facilitate maintenance and repair or replacement of equipment components. Connect equipment for ease of disconnecting, without interference with other installations.

O. Coordinate the installation of mechanical materials and equipment above ceilings with ductwork, piping, conduits, suspension system, light fixtures, cable trays, sprinkler piping and heads, and other installations.

P. Coordinate connection of mechanical systems with exterior underground and overhead utilities and services. Comply with requirements of governing regulations, franchised service companies, and controlling agencies. Provide required connection for each service.

Q. Coordinate with Owner in advance to schedule shutdown of existing systems to make new connections. Provide valves in new piping to allow existing system to be put back in service with minimum down time.

R. All materials (such as insulation, ductwork, piping, wiring, controls, etc.) located within air plenum spaces, air shafts, and occupied spaces shall have a flame-spread index of 25 or less, and smoke-developed index of 50 or less, as tested by ASTM E84 (NFPA 255) Method. In addition, the products, when tested, shall not drip flame particles, and flame shall not be progressive. Provide Underwriters Laboratories, Inc., label or listing, or satisfactory certified test report from an approved testing laboratory to prove the fire hazard ratings for materials proposed for use do not exceed those specified.

S. Coordinate installation of floor drains and floor sinks with work of other trades, such that finished floor slopes to drains and floor sinks are flush with surrounding floor.

T. Products made of or containing lead, asbestos, mercury or other known toxic or hazardous materials are not acceptable for installation under this Division. Any such products installed as part

of the work of the Division shall be removed and replaced and all costs for removal and replacement shall be borne solely by the installing Contractor.

1.10 MINOR DEVIATIONS

A. The Drawings are diagrammatic and show the general arrangements of all mechanical work and requirements to be performed. It is not intended to show or indicate all offsets, fittings, and accessories which will be required as a part of the work of this Section.

B. The Contractor shall review the structural and architectural conditions affecting his work. It is the specific intention of this section that the contractor's scope of work shall include

1. Proper code complying support systems for all equipment whether or not scheduled or detailed on drawings or in these specifications

2. Minor deviations from the mechanical plans required by architectural and structural coordination.

C. The Contractor shall study the operational requirements of each system, and shall arrange his work accordingly, and shall furnish such fittings, offsets, supports, accessories, as are required for the proper and efficient installation of all systems from the physical space available for use by this section. This requirement extends to the Contractor's coordination of this section's work with the "Electrical Work." Should conflicts occur due to lack of coordination, the time delay, cost of rectification, demolition, labor and materials, shall be borne by the Contractor and shall not be at a cost to the Owner.

D. Minor deviations in order to avoid conflict shall be permitted where the design intent is not altered.

E. Advise the Architect, in writing, in the event a conflict occurs in the location or connection of equipment. Bear all costs for relocation of equipment, resulting from failure to properly coordinate the installation or failure to advise the Architect of conflict.

1.11 PRODUCT SUBSTITUTIONS

A. The Contractor shall certify the following items are correct when using substituted products other than those scheduled or shown on the drawings as a basis of design:

1. The proposed substitution does not affect dimensions shown on drawings.

2. The Contractor shall pay for changes to building design, including engineering design, detailing, structural supports, and construction costs caused by proposed substitution.

3. The proposed substitution has no adverse effect on other trades, construction schedule, or specified warranty requirements.

4. Maintenance and service parts available locally are readily obtainable for the proposed substitute.

B. The Contractor further certifies function, appearance, and quality of proposed substitution are equivalent or superior to specified item.

C. The Contractor agrees that the terms and conditions for the substituted product that are found in the contract documents apply to this proposed substitution.

1.12 SHOP DRAWINGS AND EQUIPMENT SUBMITTALS

A. Prior to construction submit for review all materials and equipment in accordance with Division 01 requirements.

B. After approval of preliminary list of materials, the Contractor shall submit Shop Drawings and manufacturer's Certified Drawings to the Architect for approval.

C. The Contractor shall submit approved Shop Drawings and manufacturer's equipment cuts, of all equipment requiring connection by Division 26, to the Electrical Contractor for final coordination of electrical requirements. Contractor shall bear all additional costs for failure to coordinate with Division 26.

D. Submittals and Shop Drawings shall be submitted as a complete package bound in a 3-ring binder with tabs for each specification section. The approved submittals shall be converted into Operations & Maintenance Manuals at the completion of the project. Submit six (6) typed copies of submittals. Refer to Division 01 for additional requirements.

1.13 COORDINATION DOCUMENTS

A. The Contractors shall prepare coordinated Shop Drawings to coordinate the installation and location of all HVAC equipment, ductwork, grilles, diffusers, piping, fire sprinklers, lights, audio/video systems, electrical services and all system appurtenances. The Drawings shall include all mechanical rooms and floor plans. The Drawings shall be Overlay Drawings showing each discipline on a single sheet. The Drawings shall be keyed to the structural column identification system, and shall be progressively numbered. Prior to completion of the Drawings, the Contractor shall coordinate the proposed installation with the Architect and the structural requirements, and all other trades (including HVAC, Plumbing, Fire Protection, Electrical, Ceiling Suspension, and Tile Systems), and provide reasonable maintenance access requirements. When conflicts are identified, modify system layout as necessary to resolve. Do not fabricate, order or install any equipment or materials until coordination documents are approved by the General Contractor, Architect, and Owner. Within thirty (30) days after award of Contract, submit proposed coordination document Shop Drawing schedule, allowing adequate time for review and approval by parties mentioned above. Drawings should be prepared and submitted for approval on a floor-by-floor basis to phase with building construction.

B. The Drawings shall be prepared as follows:

1. The Sheet Metal (Mechanical) Contractor shall prepare Drawings to an accurate scale of 1/4" = 1'-0" or larger, on reproducible media sheets (vellum) or AutoCAD disks. Obtain reproducibles or AutoCAD files of the HVAC design from the Architect, or Engineer, at cost plus. Drawings are to be same size as Contract Drawings and shall indicate location, size and elevation above finished floor, of all HVAC equipment, ductwork, and piping. Plans shall also indicate proposed ceiling grid and lighting layout, as shown on electrical plans and reflected ceiling plans.

2. The Plumbing Contractor shall obtain reproducible plans or AutoCAD disks from the Mechanical Contractor, and indicate all plumbing lines including fittings, hangers, access panels, valves, and bottom of pipe elevations above finished floor.

3. The Fire Protection Contractor shall obtain reproducible plans or AutoCAD disks with the detailed mechanical and plumbing work shown. The Sprinkler Contractor shall indicate location of all sprinkler heads and piping, including valves and fittings, dimensions from column lines, and bottom of pipe elevations above finished floor.

4. Plans are to incorporate all addenda items and change orders.

5. Distribute plans to all trades and provide additional coordination as needed.

C. Advise the Architect in the event a conflict occurs in the location or connection of equipment. Bear all costs for relocation of equipment, resulting from failure to properly coordinate the installation or failure to advise the Architect of conflict.

D. Provide means of access to all valves, dampers, controllers, operable devices, and other apparatus that may require adjustment or servicing.

E. Verify in field exact size, location, invert, and clearances regarding all existing material, equipment and apparatus, and advise the Architect of any discrepancies between those indicated on the Drawings and those existing in the field prior to any installation related thereto.

F. Final Coordination Drawings with all appropriate information added are to be submitted as Record Drawings at completion of project.

G. Provide copy of Record Drawings to Testing and Balancing Contractor for their use when doing their work.

1.14 RECORD DRAWINGS

A. Before commencing installation, obtain an extra set of prints from Architect, marked "Record." Keep this set of Drawings at the job site at all times, and use it for no other purpose but to mark on it all the changes and revisions to the Contract Drawings resulting from coordination with other trades. At the completion of the project,

1. Obtain a clean set of reproducibles from the Architect or Engineer, at cost plus, and transfer the revisions to these reproducibles in a neat and orderly fashion.

OR

2. Edit project AutoCAD files to incorporate all site markups, changes, and revisions to the Contract Drawings. Submit plots of Record Drawings and six copies CD Roms labeled with all record AutoCAD drawing files.

B. Provide copy of Record Drawings to Testing and Balancing Contractor for use when doing his work.

C. Mark Drawings to indicate revisions to piping and ductwork, size and location both exterior and interior; including locations of coils, dampers and other control devices, filters, boxes and similar units requiring periodic maintenance or repair; actual equipment locations, dimensioned from column lines; actual inverts and locations of underground piping; concealed equipment, dimensioned to column lines; mains and branches of piping systems, with valves and control devices located and numbered, concealed unions located, and with items requiring maintenance located (i.e. – valves, traps, strainers, expansion compensators, tanks, etc.); Change Orders; concealed control system devices.

D. Mark Specifications to indicate approved substitutions; Change Orders; actual equipment and materials used.

E. Refer also to Special Conditions in Division 01 for full scope of requirements.

1.15 START-UP SERVICE

A. Prior to start-up, be assured that systems are ready, including checking the following: Proper equipment rotation, proper wiring, auxiliary connections, lubrication, venting, controls, and installed and properly set relief and safety valves.

B. Provide services of factory-trained technicians for start-up of air conditioning units, temperature controls, chillers, boilers, pumps, and other major pieces of equipment. Certify in writing compliance with this Paragraph, stating names of personnel involved and the date work was performed.

C. Provide certificates of calibration for all sensors required for control and monitoring including temperature and pressure.

D. Refer to other Division 23 Sections for additional requirements.

1.16 INSTRUCTION, MAINTENANCE, AND O&M MANUALS

A. O&M Manuals: Upon completion of the work, and prior to training of Owner's personnel, the Contractor shall submit to the Architect complete set of operating instructions, maintenance instructions, part lists, and all other bulletins and brochures pertinent to the operation and maintenance for equipment furnished and installed as specified in this section, bound in a durable binder. Refer to Division 01.

B. Contractor shall be responsible for providing proper instruction of the of Owner's personnel for operation and maintenance of equipment, and apparatus installed as specified in Division 23 to be no less than two hours for each piece of equipment. The Contractor shall develop and submit training materials prior to this training. These materials shall include qualifications of the trainer, training agenda, learning objectives, and a written test to be administered at the end of the training session. Operation and Maintenance manuals must present, incorporated and referenced in the training sessions.

1.17 DELIVERY, STORAGE AND HANDLING

A. Deliver products to project properly identified with names, model numbers, types, grades, compliance labels, and similar information needed for distinct identifications; adequately packaged and protected to prevent damage during shipment, storage, and handling.

B. Store equipment and materials in an environmentally controlled area at the site, unless off-site storage is authorized in writing. Protect stored equipment and materials from damage. Piping shall be stored in bundles covered with visqueen. Piping showing signs of rust shall be removed from site and replaced.

C. Coordinate deliveries of mechanical materials and equipment to minimize construction site congestion. Limit each shipment of materials and equipment to the items and quantities needed for the smooth and efficient flow of installations.

1.18 TEMPORARY FACILITIES

A. Refer to Division 01 for the requirements of temporary water and sewer for construction and safety. Provide temporary heating, air conditioning, ventilation, water, and sewer, etc. services as necessary during the construction period and as required to maintain operation of existing systems.

B. Temporary Heating for Commissioning Tests:

1. Provide temporary heating where needed to provide false load for commissioning tests.

2. Temporary heating may be from the permanent heating system of the project or from a dedicated temporary heating system. If temporary system is necessary, select facilities known to be safe and without deleterious effect upon what work in place or being installed.

C. Temporary Cooling for Commissioning Tests:

1. Provide temporary cooling where needed to provide false load for commissioning tests.

2. Temporary cooling may be from the permanent cooling system of the project or from a dedicated temporary cooling system. If temporary system is necessary, select facilities known to be safe and without deleterious effect upon the work in place or being installed.

1.19 POSTED OPERATING INSTRUCTIONS

A. Furnish approved operating instructions for systems and equipment indicated in the technical sections for use by operation personnel. The operating instructions shall include wiring diagrams, control diagrams, and control sequence for each principal system and equipment. Print or engrave operating instructions and frame under glass or in approved laminated plastic. Post instructions where directed. Attach or post operating instructions adjacent to each principal system and equipment including start-up, operating, shutdown, safety precautions and procedure in the event of equipment failure. Provide weather-resistant materials or weatherproof enclosures for operating instructions exposed to the weather. Operating instructions shall not fade when exposed to sunlight and shall be secured to prevent easy removal.

1.20 SAFETY AND INDEMNITY

A. The Contractor shall be solely and completely responsible for conditions of the job site including safety of all persons and property during performance of the work. This requirement will apply continuously and not be limited to normal hours of work.

B. No act, service, Drawing, review, or Construction Review by the Owner, Architect, the Engineers or their consultants, is intended to include the review of the adequacy of the Contractor's safety measures, in, on, or near the construction site.

C. The Contractor performing work under this Division of the Specifications shall hold harmless, indemnify and defend the Owner, the Architect, the Engineers and their consultants, and each of their officers, employees and agents from any and all liability claim, losses or damage arising, or alleged to arise from bodily injury, sickness, or death of a person or persons, and for all damages arising out of injury to or destruction of property arising directly or indirectly out of, or in connection with, the performance of the work under the Division of the Specifications, and from the Contractor's negligence in the performance of the work described in the Construction Contract Documents; but not including the sole negligence of the Owner, the Architect, the Engineers, and their consultants or their officers, employees and agents.

1.21 CLEANING AND CLOSING

A. All work shall be inspected, tested, and approved before being concealed or placed in operation.

B. Upon completion of the work, all equipment installed as specified in this section, and all areas where work was performed, shall be cleaned to provide operating conditions satisfactory to the Architect.

1.22 WARRANTIES

A. All equipment shall be provided with a minimum one-year warranty to include parts and labor. Refer to individual Equipment Specifications for extended or longer-term warranty requirements.

B. Provide complete warranty information for each item, to include product or equipment, date of beginning of warranty or bond; duration of warranty or bond; and names, addresses, telephone numbers and procedures for filing a claim and obtaining warranty services.

C. Service during warranty period: Contractor shall provide maintenance as specified elsewhere during the 12-month warranty period.

1.23 GUARANTEE

A. The Contractor shall guarantee and service all workmanship and materials to be as represented by him and shall repair or replace, at no additional cost to the Owner, any part thereof which may become defective within the period of one (1) year after the Date of Final Acceptance, ordinary wear and tear excepted.

B. Contractor shall be responsible for and pay for any damages caused by or resulting from defects in his work.

PART 2 - PRODUCTS

2.01 GENERAL

A. Furnish and install all new material, equipment, and apparatus hereinafter specified unless specifically noted otherwise. All material, equipment, and apparatus shall be identified by the manufacturer's name, nameplate, and pertinent data.

B. All materials, equipment, and apparatus are mentioned as standards unless noted otherwise. The words "or approved equal" shall be considered to be subsequent to all manufacturers' names used herein, unless specifically noted that substitutes are not allowed.

2.02 SUPPORTS AND ANCHORS

A. General: Comply with applicable codes pertaining to product materials and installation of supports and anchors, including, but not limited to, the following:

1. UL and FM Compliance: Provide products, which are UL listed and FM approved.

2. ASCE 7-05: “American Society of Civil Engineers.”

3. 2006 International Building Code (IBC)

4. MSS Standard Compliance: Manufacturer's Standardization Society (MSS).

5. SMACNA: "Seismic Restraint Manual: Guidelines for Mechanical Systems."

6. NFPA: Pamphlet number 13 and 14 for fire protection systems.

7. Provide copper plated or plastic coated supports and attachment for copper piping systems. Field applied coatings or tape is unacceptable.

8. Manufacturer: B-Line, Grinnell, Michigan, Tolco, Kin-Line, Simpson, or Superstrut.

B. Horizontal Piping Hangers and Supports: Except as otherwise indicated, provide factory-fabricated hangers and supports of one of the following MSS types listed.

1. Adjustable Steel Clevis Hangers: MSS Type 1.

2. Adjustable Steel Swivel Band Hangers: MSS Type 10.

3. U-Bolts: MSS Type 24.

4. Pipe Slides and Slide Plates: MSS Type 35, including one of the following plate types:
   a. Plate: Unguided type.
   b. Plate: Guided type.
   c. Plate: Hold-down clamp type.

5. Pipe Saddle Supports: MSS Type 36, including steel pipe base support and cast iron floor flange.

6. Pipe Saddle Supports with U-Bolt: MSS Type 37, including steel pipe base support and cast iron floor flange.

7. Adjustable Pipe Saddle Supports: MSS Type 38, including steel pipe base support and cast iron floor flange.

8. Single Pipe Roller with Malleable Sockets: MSS Type 41.

9. Adjustable Roller Hangers: MSS Type 43.

10. Pipe Roll Stands: MSS Type 44.

11. Pipe Guides: Provide factory-fabricated guides of cast semi-steel or heavy fabricated steel, consisting of a bolted two-section outer cylinder and base with a two-section guiding spider bolted tight to pipe. Size guide and spiders to clear pipe and insulation (if any), and cylinder. Provide guides of length recommended by manufacturer to allow indicated travel.

C. Vertical Piping Clamps: Provide factory-fabricated two-bolt vertical piping riser clamps, MSS Type 8.

D. Hanger-Rod Attachments: Except as otherwise indicated, provide factory-fabricated hanger-rod attachments of one of the following MSS types listed.

1. Steel Turnbuckles: MSS Type 13.
2. Steel Clevises: MSS Type 14.
3. Swivel Turnbuckles: MSS Type 15.
4. Malleable Iron Eye Sockets: MSS Type 16.

5. Steel Weldless Eye Nuts: MSS Type 17.

E. Building Attachments: Except as otherwise indicated, provide factory-fabricated building attachments of one of the following types listed.

1. Concrete Inserts: MSS Type 18 or Blue Banger Hanger by Simpson

2. Steel Brackets: One of the following for indicated loading:
   a. Light Duty: MSS Type 31.
   b. Medium Duty: MSS Type 32.
   c. Heavy Duty: MSS Type 33.

3. Horizontal Travelers: MSS Type 58.

4. Internally Threaded Expansion Shell Anchors: By Simpson or approved equal.

5. Concrete Screw Anchors: Titen HD by Simpson or approved equal.

F. Saddles and Shields: Except as otherwise indicated, provide saddles or shields under piping hangers and supports, factory-fabricated, for all insulated piping. Size saddles and shields for exact fit to mate with pipe insulation.

1. Pipe Covering Protection Saddles: MSS Type 39; fill interior voids with segments of insulation matching adjoining insulation.

2. Insulation Protection Shields: MSS Type 40, 18” minimum, or of the length recommended by manufacturer to prevent crushing of insulation. High-density insulation insert lengths shall match or exceed shield length.

3. Thermal Hanger Shields: Constructed of 360° insert of waterproofed calcium silicate (60 psi flexural strength minimum) encased in 360° sheet metal shield. Provide assembly of same thickness as adjoining insulation. Shield length shall match or exceed length of calcium silicate insert.

G. Miscellaneous Materials:

1. Metal Framing: Provide products complying with NEMA STD ML1.

2. Steel Plates, Shapes, and Bars: Provide products complying with ASTM A36.

3. Cement Grout: Portland Cement (ASTM C150, Type I or Type III) and clean uniformly graded, natural sand (ASTM C404, Size No. 2). Mix at a ratio of 1.0 part cement to 3.0 parts sand by volume, with minimum amount of water required for placement and hydration.

4. Heavy-Duty Steel Trapezes: Fabricate from steel shapes selected for loads required. Weld steel in accordance with AWS standards.

5. Pipe Brackets: "HoldRite" copper plated brackets. Insulate brackets attached to metal studs with felt.

2.03 PIPE PORTALS

A. Where pipe portals are not provided by other sections of Specification, provide prefabricated insulated pipe portals as required for piping penetrating through the roof where shown on plans. Field built pipe portals are acceptable alternatives - provide detail of construction for review.

B. Standard pipe portals, unless otherwise noted, shall be constructed as follows:

1. Curb shall be constructed of heavy gauge galvanized steel with continuous welds on shell seams.

2. Insulation to be 1-½” thick, 3 lb density rigid fiberglass.

3. Curb to have a raised 3” (minimum), 45° cant.

4. Curb to have 1-1/2" x 1-1/2" wood nailer (minimum).

5. Curb height to be 8” (minimum) above roof deck.

6. Cant shall be raised to match roof insulation thickness.

7. Cover or flashing to be constructed of galvanized steel or other suitable material to provide sturdy weather tight closure. Provide collars and rubber nipples with draw bands of sizes required by piping. Size curb, cover and nipples per manufacturer's recommendations.

8. Manufacturer: Roof Products Systems or Pate.

2.04 EQUIPMENT/PIPING RAILS

A. Where equipment/pipe rails are not provided by other sections of Specification, provide prefabricated reinforced equipment rails as required for support of equipment and piping. Field built curbs are acceptable alternatives - provide detail of construction for review.

B. Standard equipment rail, unless otherwise noted, shall be constructed as follows:

1. Construct of heavy gauge galvanized steel with continuous welds on shell seams.

2. Provide internal reinforcing supports welded as required to meet application requirements.

3. Equipment rails to have raised 3” (minimum), 45° cant.

4. Equipment rails to have 1-1/2" x 1-1/2" wood nailer (minimum) and counterflashing.

5. Equipment rail height to be 6” (minimum) above roof deck.

6. Cant shall be raised to match roof insulation thickness.

C. Equipment rails to be constructed to meet equipment size and weight requirements. Provide tapered rails to match roof pitch where required.

D. Manufacturer: Pate, Vent Products, Thy Curb or Roof Products Systems.

2.05 ACCESS PANELS AND ACCESS DOORS

A. Provide all access doors and panels to serve equipment under this work, including those which must be installed, in finished architectural surfaces. Frame of 16-gauge steel, door of 20 gauge steel. 1” flange width, continuous piano hinge, key operated, prime coated. Refer to Architectural Specifications for the required product Specification for each surface. Contractor is to submit schedule of access panels for approval. Exact size, number and location of access panels is not shown on Plans. Access doors shall be of a size to permit removal of equipment for servicing. Access door shall have same rating as the wall or ceiling in which it is mounted. Provide access panel for each trap primer or concealed valve, for fire and combination fire/smoke dampers, and for volume dampers. Use no panel smaller than 12" x 12” for simple manual access, or smaller than 24" x 24" where personnel must pass through. Provide cylinder lock for access door serving mixing or critical valves in public areas.

B. Included under this work is the responsibility for verifying the exact location and type of each access panel or door required to serve equipment under this work and in the proper sequence to keep in tune with construction and with prior approval of the Architect. Access doors in fire rated partitions and ceilings shall carry all label ratings as required to maintain the rating of the rated assembly.

C. Acceptable Manufacturers: Milcor, Karp, Nystrom, or Elmdor/Stoneman.

D. Submit markup of architectural plans showing size and location of access panels required for equipment access for approval by Architect.

2.06 IDENTIFICATION MARKERS

A. Mechanical Identification Materials: Provide products of categories and types required for each application as referenced in other Division 23 Sections. Where more than single type is specified for application, selection is installer's option, but provide single selection for each product category. Stencils are not acceptable.

B. Plastic Pipe Markers:

1. Snap-On Type: Provide pre-printed, semi-rigid snap-on, color coded pipe markers, complying with ANSI A13.1.

2. Pressure Sensitive Type: Provide pre-printed, permanent adhesive, color coded, pressure sensitive vinyl pipe markers, complying with ANSI A13.1. Secure both ends of markers with color coded adhesive vinyl tape.

3. Insulation: Furnish 1” thick molded fiberglass insulation with jacket for each plastic pipe marker to be installed on uninsulated pipes subjected to fluid temperatures of 125°F (52°C) or greater. Cut length to extend 2” beyond each end of plastic pipe marker.

4. Arrows: Print each pipe marker with arrows indicating direction of flow, either integrally with piping system service lettering (to accommodate both directions), or as separate unit of plastic.

C. Plastic Duct Markers:

1. Provide 4 1/2” x 6” laminated plastic, ANSI A13.1 color coded duct markers with white core lettering.

2. Nomenclature: Include the following:
   a. Direction of air flow.

3. Duct service (supply, return, exhaust, etc.).
   a. Duct origin (from).
   b. Duct destination (to).
   c. Design cfm.

4. Provide a minimum of every 20 feet on all ducts with a diameter or width greater than 12”.

D. Underground-Type Plastic Line Markers: Provide 6” wide x 4 mils thick multi-ply tape, consisting of solid metallic foil core between 2 layers of plastic tape. Markers to be permanent, bright colored, continuous printed, intended for direct burial service.

E. Valve Tags:

1. Brass Valve Tags: Provide 1 1/2" diameter 19-gauge polished brass valve tags with stamp-engraved piping system abbreviation in 1/4” high letters and sequenced valve numbers 1/2” high, and with 5/32” hole for fastener. Fill tag engraving with black enamel.

2. Plastic Laminate Valve Tags: Provide 3/32” thick engraved plastic laminate valve tags, with piping system abbreviations in 1/4" high letters and sequenced valve number 1/2" high, and with 5/32” hole for fasteners.

3. Valve Tag Fasteners: Provide solid brass chain (wire link or beaded type), or solid brass S-hooks of the sizes required for proper attachment of tags to valves, and manufactured specifically for that purpose.

4. Access Panel Markers: Provide 1/16” thick engraved plastic laminate access panel markers, with abbreviations and numbers corresponding to concealed valve. Include 1/8” center hole to allow attachment.

5. Non-potable Water Tags: 1/16” thick, engraved, plastic tags as indicated on Drawings.

F. Plastic Equipment Signs:

1. Provide 4-1/2” x 6” plastic laminate sign, ANSI A.13 color coded with engraved white core lettering.

2. Fasteners: Self-tapping stainless steel screws, except contact-type permanent adhesive where screws cannot or should not penetrate the substrate.

3. Nomenclature: Include the following, matching terminology on schedules as closely as possible:
   a. Name and plan number.
   b. Equipment service.
   c. Design capacity.
   d. Other design parameters, such as pressure drop, entering and leaving conditions, rpm, etc.

G. Acceptable Manufacturers: Craftmark, Seton, Brady, Marking Services, Inc., or Brimar.

2.07 ELECTRICAL

A. General:

1. All electrical material, equipment, and apparatus specified herein shall conform to the requirements of Division 26.

2. Provide all motors for equipment specified herein. Provide motor starters, controllers, and other electrical apparatus and wiring which are required for the operation of the equipment specified herein.

3. Set and align all motors and drives in equipment specified herein.

4. Provide expanded metal or solid sheet metal guards on all V-belt drives to totally enclose the drive on all sides. Provide holes for tachometer readings. Support guards separately from rotating equipment.

5. Provide for all rotating shafts, couplings, etc., a solid sheet metal, inverted "U" cover over the entire length of the exposed shaft and support separately from rotating equipment. Cover shall extend to below the bottom of the shaft and coupling, and shall meet the requirements of the State Industrial Safety Regulations.

6. Specific electrical requirements (i.e., horsepower and electrical characteristics) for mechanical equipment are scheduled on the Drawings.

B. Quality Assurance:

1. Electrical components and materials shall be UL or ETL listed/labeled as suitable for location and use - no exceptions.

C. Motors:

1. The following are basic requirements for simple or common motors. For special motors, more detailed and specific requirements are specified in the individual equipment Specifications.

2. Torque characteristics shall be sufficient to satisfactorily accelerate the driven loads.

3. Motor sizes shall be large enough so that the driven load will not require the motor to operate in the service factor range. Unless otherwise noted on plans, all motors ½ HP or larger shall be rated for 208 or 460 volt, 3-phase, operation. Unless otherwise noted on plans, all motors less than 1/2 HP shall be rated for 120 volt, single phase operation.

4. Temperature Rating: Motor meets class B rise with class F insulation.

5. Service Factor: 1.15 for poly-phase motors and 1.35 for single phase motors.

6. Motor Construction: NEMA Standard MG 1, general purpose, continuous duty, Design "B", except "C" where required for high starting torque.
   a. Frames: NEMA Standard No. 48 or 56; use driven equipment manufacturer's standards to suit specific application.
   b. VFD driven motors to be provided rated for inverter duty (NEMA Standard MG-1, Part

31) and equipped with a shaft grounding device or as an insulated bearing motor.

c. Bearings:
   1) Ball or roller bearings with inner and outer shaft seals.
   2) Re-greasable, except permanently sealed where motor is normally inaccessible for regular maintenance.
   3) Designed to resist thrust loading where belt drives or other drives product lateral or axial thrust in motor.
   4) For fractional horsepower, light duty motors, sleeve type bearings are permitted.
   5) Enclosure Type:
      a) Open drip-proof motors for indoor use where satisfactorily housed or remotely located during operation.
      b) Guarded drip-proof motors where exposed to contact by employees or building occupants.
      c) Weather protected Type I for outdoor use, Type II where not housed.

d. Overload Protection: Built-in thermal overload protection where external overload protection is not provided and, where indicated, internal sensing device suitable for signaling and stopping motor at starter.

e. Noise Rating: "Quiet."

f. Efficiency:
   1) Motors shall have a minimum efficiency per governing State or Federal codes, whichever is higher.
   2) Motors shall meet the NEMA premium efficiency standard

g. Nameplate: Indicate the full identification of manufacturer, ratings, characteristics, construction, special features and similar information.

D. Starters and Electrical Devices:

1. Motor Starter Characteristics:
   a. Enclosures: NEMA 1, general purpose enclosures with padlock ears, except in wet locations shall be NEMA 3R with conduit hubs.
   b. Type and size of starter shall be as recommended by motor manufacturer and the driven equipment manufacturer for applicable protection and start-up condition.

2. Manual switches shall have pilot lights and all required switch positions for multi-speed motors. Overload Protection: Melting alloy or bi-metallic type thermal overload relays, sized according to actual operating current (field measured).

3. Magnetic Starters:
   a. Heavy duty, oil resistant, hand-off-auto (HOA), or as indicated, and pilot lights, properly arranged for single speed or multi-speed operation as indicated.
   b. Trip-free thermal overload relays, each phase, sized according to actual operating current (field measured).
   c. Interlocks, pneumatic switches and similar devices as required for coordination with control requirements of Division 23 Controls sections.
   d. Built-in primary and secondary fused control circuit transformer, supplied from load side of equipment disconnect.
   e. Externally operated manual reset.
   f. Under-voltage release or protection for all motors over 20 hp.

4. Motor Connections: Liquid tight, flexible conduit, except where plug-in electrical cords are specifically indicated.

E. Low Voltage Control Wiring:

1. General: 14 gauge, Type THHN, color coded, installed in conduit.

2. Manufacturer: General Cable Corp., Alcan Cable, American Insulated Wire Corp., Senator Wire and Cable Co., or Southwire Co.

F. Disconnect Switches:

1. Fusible Switches: For equipment 1/2 HP or larger, provide fused, each phase; heavy duty; horsepower rated; spring loaded quick-make, quick-break mechanism; dead front line side shield; solderless lugs suitable for copper or aluminum conductors; spring reinforced fuse clips; electro silver plated current carrying parts; hinged doors; operating lever arranged for locking in the "OPEN" position; arc quenchers; capacity and characteristics as indicated.

2. Non-Fusible Switches: For equipment less than 1/2 horsepower, switch shall be horsepower rated; toggle switch type with thermal overload quantity of poles and voltage rating as required.

PART 3 - EXECUTION

3.01 GENERAL

A. Workmanship shall be performed by licensed journeymen or master mechanics and shall result in an installation consistent with the best practices of trades.

B. Install work uniform, level and plumb, in relationship to lines of building. Do not install any diagonal, or otherwise irregular work unless so indicated on Drawings or approved by Architect.

3.02 MANUFACTURER'S DIRECTIONS

A. Follow manufacturers' directions and recommendations in all cases where the manufacturers of articles used on this Contract furnish directions covering points not shown on the Drawings or covered in these Specifications.

1. If the contractor must deviate from the manufacturer’s recommendations provide a letter from the manufacturer indicating the clearance to be provided is acceptable for scheduled performance and maintenance.

3.03 INSTALLATION

A. Coordinate the work between the various Mechanical Sections and with the work specified under other Divisions. If any cooperative work must be altered due to lack of proper supervision or failure to make proper and timely provisions, the alternations shall be made to the satisfaction of the Engineer and at the Contractor’s cost. Coordinate wall and ceiling work with the General Contractor, and his subcontractors in locating ceiling air outlets, wall registers, etc.

B. Inspect all material, equipment, and apparatus upon delivery and do not install any damaged or defected materials.

3.04 SUPPORTS AND HANGERS

A. Prior to installation of hangers, supports, anchors, and associated work, installer shall meet at project site with Contractor, installer of each component of associated work, inspection and testing agency representatives, (if any), installers of other work with requirements specified.

B. Installation of Building Attachments: Install building attachments at required locations within concrete or on structural steel for proper piping support. Install additional building attachments where support is required for additional concentrated loads, including valves, flanges, guides, strainers, expansion joints, and at changes in direction of piping. Install concrete inserts before concrete is placed. Fasten insert securely to forms. Where concrete with compressive strength less than 2,500 psi is indicated, install reinforcing bars through opening at top of inserts.

C. Proceed with installation of hangers, supports, and anchors only after required building structural work has been completed in areas where the work is to be installed. Correct inadequacies including, but not limited to, proper placement of inserts, anchors, and other building structural attachments.

D. Install hangers, supports, clamps, and attachments to support piping properly from building structure. Arrange for grouping of parallel runs of horizontal piping to be supported together on trapeze type hangers where possible. Where piping of various sizes is to be supported together by trapeze hangers, space hangers for smallest pipe size or install intermediate supports for smaller diameter pipe. Do not use wire or perforated metal to support piping, and do not support piping from other piping.

E. Install hangers within 12 inches of every change in piping direction, end of pipe run or concentrated load, and within 36 inches of every major piece of equipment. Hangers shall be installed on both sides of flexible connections. Where flexible connection connects directly to a piece of equipment only one hanger is required.

F. Install hangers and supports complete with necessary inserts, bolts, rods, nuts, washers, and other accessories. Except as otherwise indicated for exposed continuous pipe runs, install hangers and supports of same type and style as installed for adjacent similar piping.

G. Prevent electrolysis in support of copper tubing by use of hangers and supports which are copper plated, or by other recognized industry methods.

H. Hanger Spacing in accordance with following minimum schedules (other spacings and rod sizes may be used in accordance with the SMACNA Seismic Restraint Manual using a safety factor of five):

1. Copper Pipe:

Pipe Size	Max. Hanger Spacing	Rod Size
1/2" to 2"	6 feet	3/8"
2 ½" and larger	8 feet	1/2"

I. Provisions for Movement:

1. Install hangers and supports to allow controlled movement of piping systems and to permit freedom of movement between pipe anchors, and to facilitate action of expansion joints, expansion loops, expansion bends, and similar units.

2. Load Distribution: Install hangers and supports so that piping live and dead loading and stresses from movement will not be transmitted to connecting equipment.

3. Insulated Piping: Comply with the following installation requirements:
   a. Clamps: Attach clamps, including spacers, (if any), to piping with clamps projecting through insulation.
   b. Shields: Where low compressive strength insulation or vapor barriers are indicated on cold or chilled water piping, install shields or inserts.
   c. Saddles: Where insulation without vapor barrier is indicated install protection saddles.

J. Installation of Anchors:

1. Install anchors at proper locations to prevent excessive stresses and to prevent transfer of loading and stresses to connected equipment.

2. Fabricate and install anchor by welding steel shapes, plates and bars to piping and to structure.

3. Where expansion compensators are indicated, install anchors in accordance with expansion unit manufacturer's written instructions, to limit movement of piping and forces to maximums recommended by manufacturer for each unit.

4. Anchor Spacings: Where not otherwise indicated, install anchors at ends of principal pipe runs, at intermediate points in pipe runs between expansion loops and bends.

K. Equipment Supports:

1. Provide all concrete bases, unless otherwise furnished as work of Division 03. Furnish to Division 03 Contractor scaled layouts of all required bases, with dimensions of bases, and location to column centerlines. Furnish templates, anchor bolts, and accessories necessary for base construction.

2. Provide structural steel stands to support equipment not floor mounted or hung from structure. Construct of structural steel members or steel pipe and fittings. Provide factory-fabricated tank saddles for tanks.

L. Adjusting:

1. Hanger Adjustment: Adjust hangers so as to distribute loads equally on attachments.

2. Support Adjustment: Provide grout under supports so as to bring piping and equipment to proper level and elevations.

3. Clean factory-finished surfaces. Repair any marred or scratched surfaces with manufacturer's touch-up paint.

3.05 ROOF CURBS, EQUIPMENT RAILS, PIPE PORTALS

A. Install per manufacturer's instructions.

B. Coordinate with other trades so units are installed when roofing is being installed.

C. Verify roof insulation thickness and adjust raise of cant to match.

3.06 ELECTRICAL REQUIREMENTS

A. Mechanical Contractor shall coordinate with Division 26 work to provide complete systems as required to operate all mechanical devices installed under this Division of work.

B. Installation of Electrical Connections: Furnish, install, and wire (except as may be otherwise indicated) all heating, ventilating, air conditioning, etc., motors and controls in accordance with the following schedule and in accordance with equipment manufacturer's written instructions and with recognized industry practices, and complying with applicable requirements of UL, NEC, and NECA's "Standard of Installation" to ensure that products fulfill requirements. Carefully coordinate with work performed under the Mechanical Division of these Specifications.

C. Division 23 has responsibilities for electrically powered or controlled mechanical equipment which is specified in Division 23 Specifications or scheduled on Division 23 Drawings. The specific division of responsibilities between Division 23 and 26 for furnishing or wiring this equipment is as follows:

1. Division 23 Mechanical Responsibilities:
   a. MOTORS: Furnish and install all motors necessary for mechanical equipment.
   b. MAGNETIC STARTERS: Furnish all magnetic starters whether manually or automatically controlled which are necessary for mechanical equipment. Furnish these starters with all control relays or transformers necessary to interface with mechanical controls. If the starter is factory installed on a piece of Division 23 equipment, also furnish and install the power wiring between starter and motor.
   c. VARIABLE FREQUENCY DRIVES: Provide all VFD's associated with mechanical equipment. If the drive is installed on a piece of factory assembled equipment the wiring between motor and drive is to be provided as part of the factory equipment.
   d. DISCONNECTS: Provide the disconnects which are part of factory wired Division 23 equipment. Factory wiring to include wiring between motor and disconnect or combination starter/disconnect.
   e. CONTROLS: Division 23 Contractor (including the temperature controls subcontractor) is responsible for the following equipment in its entirety. This equipment includes but is not limited to the following:
      1) Control relays necessary for controlling Division 23 equipment.
      2) Control transformers necessary for providing power to controls for Division 23 equipment.
      3) Line voltage thermostats.
      4) Low or non-load voltage control components.
      5) Remote bulb thermostats.
      6) Non-life safety related valve or damper actuators.
      7) Float switches.
      8) Solenoid valves, EP and PE switches.
      9) Refrigeration controls. (Division 26 provides power to refrigeration panels.)
   f. FIRE AND LIFE SAFETY EQUIPMENT:
      1) Fire/Smoke Dampers: Division 23 is responsible for providing and physically installing the damper and for installing any required control interface wiring to Division 23 controls.
         a) Where fire/smoke dampers are part of an integrated smoke control system, Division 23 is responsible for providing dampers with necessary end switches for proof of closure. (See Section 233113.)
         b) Where these dampers are not part of an integrated area wide smoke detection system, Division 23 is responsible for providing each fire/smoke damper with a dedicated duct detector installed per the requirements of the building code. (See Section 233113). If not integral with the damper assembly, the detector is to be installed by Div. 23 but wired for damper control by Div. 26.

2) Fire Sprinkler System: Division 23 is responsible for providing necessary controls including flow switches and alarm bells.
3) Specialized fire suppression systems: Division 23 is responsible for providing necessary system controls and any required control interface wiring to these controls. Division 26 is responsible for bringing power to point of connection with the system.

D. Division 26 has responsibilities for electrically powered or controlled mechanical equipment, which is specified in Division 23 Specifications or scheduled on Division 23 Drawings. The specific division of responsibilities between Division 23 and 26 for furnishing or wiring this equipment is as follows:

1. Division 26 Electrical Responsibilities:
   a. MOTORS: Provide the power wiring for the motors.
   b. MAGNETIC STARTERS: Except where magnetic starters are factory installed on Division 23 factory assembled equipment, Division 26 is to install magnetic starters furnished by Division 23 and install the necessary power wiring to the starter and from the starter to the motor. In the case of factory installed starters, Division 26 is to install the necessary power wiring to the starter.
   c. VARIABLE FREQUENCY DRIVES: Physically mount all VFD's, which are not specified to be installed on Division 23 factory assembled equipment. Provide the necessary power wiring to the VFD and from the VFD to the motor except in the case of factory installed VFD's where wiring between the motor and VFD is to be by Division 23. Where disconnects are installed between a VFD and a motor provide the interlocking wiring between the disconnect and VFD to insure that the drive is shutdown simultaneously with motor.
   d. DISCONNECTS: Provide all disconnects necessary for Division 23 mechanical equipment which are not provided as part of factory wired Division 23 equipment. Provide power wiring to all disconnects. In addition provide power wiring between motor and disconnect when the disconnect is not factory installed. See also Variable Frequency Drive above for special wiring requirements.
   e. CONTROLS: Division 26 Contractor is responsible for providing power to control panels and control circuit outlets.
   f. FIRE AND LIFE SAFETY EQUIPMENT:
      1) Fire/Smoke Dampers: Division 26 is responsible for power wiring to the damper and as follows:
         a) Where these dampers are part of an integrated smoke control system Division 26 is responsible for providing the detectors and for all fire detection system wiring necessary to integrate dampers and related end switches into the system.
         b) Where these dampers are not part of an integrated area wide smoke detection system, Division 23 is responsible for providing each fire/smoke damper with a dedicated duct detector installed per the requirements of the building code. (See Section 233113). If not integral with the damper assembly, the detector is to be installed by Div. 23 but wired for damper control by Div. 26.
      2) Fire Sprinkler System: Division 26 is responsible for providing power wiring to fire protection controls including flow switches and alarm bells.
      3) Specialized fire suppression systems: Division 26 is responsible for providing power wiring to suppression system and its controls.

2. Coordinate with other work, including wires/cables, raceway and equipment installation, as necessary to properly interface installation of electrical connections for equipment with other work.

3. Connect electrical power supply conductors to equipment conductors in accordance with equipment manufacturer's written instructions and wiring diagrams. Mate and match conductors of electrical connections for proper interface between electrical power supplies and installed equipment.

4. Maintain existing electrical service and feeders to occupied areas and operational facilities, unless otherwise indicated, or when authorized otherwise in writing by Owner, or Architect/Engineer. Provide temporary service during interruptions to existing facilities. When necessary, schedule momentary outages for replacing existing wiring systems with new wiring systems. When that "cutting-over" has been successfully accomplished, remove, relocate, or abandon existing wiring as indicated.

5. Cover splices with electrical insulating material equivalent to, or of greater insulation resistivity rating, than electrical insulation rating of those conductors being spliced.

6. Prepare cables and wires, by cutting and stripping covering armor, jacket, and insulation properly to ensure uniform and neat appearance where cables and wires are terminated. Exercise care to avoid cutting through tapes which will remain on conductors. Also avoid "ringing" copper conductors while skinning wire.

E. Motors and Motor Control Equipment: Conform to the standards of the NEMA. Equip motors with magnetic or manual line starters with overload protection. Motor starters and line voltage controls shall be installed under Electrical Section but located and coordinated as required under this Section of the work. Starters shall be combination type with non-fusible disconnect switches. All single phase fractional horsepower motors shall have built-in overload protection.

3.07 PAINTING

A. All painting shall be provided under this Division work, unless otherwise specified under Section 099100: Painting. Painting schemes shall comply with ANSI A13.1. Paint all exposed materials such as piping, ductwork, equipment, insulation, steel, etc. Exposed gas piping inside and outside the building shall be painted with two coats of "Rust-O-Leum" Yellow. The inside surface of visible ductwork above diffusers/grilles shall be painted flat black. Exposed copper indirect waste piping serving food service equipment shall be painted metallic chrome.

B. All exposed work under Division 23 shall receive either a factory finish or a field prime coat finish, except:

1. Exposed copper piping.

2. Aluminum jacketed outdoor insulated piping.

3.08 IDENTIFICATION MARKERS

A. General: Where identification is to be applied to surfaces which require insulation, painting, or other covering or finish, including valve tags in finished mechanical spaces, install identification after completion of covering and painting. Install identification prior to installation of acoustical ceilings and similar removable concealment.

B. Piping System Identification:

1. Install pipe markers on each system indicated to receive identification, and include arrows to show normal direction of flow.

2. Locate pipe markers as follows:
   a. Near each valve and control device.
   b. Near each branch, excluding short take-offs for fixtures and terminal units; mark each pipe at branch, where there could be question of flow pattern.
   c. Near locations where pipes pass through walls or floors/ceilings, or enter non-accessible enclosures.
   d. At access doors, manholes, and similar access points which permit view of concealed piping.
   e. Near major equipment items and other points of origination and termination.
   f. Spaced horizontally at maximum spacing of 20' along each piping run, with minimum of one in each room. Vertically spaced at each story transversed.

C. Ductwork Identification: A minimum of every 20 feet for all ductwork 12 inch or more in diameter or width.

D. Mechanical Equipment Identification: Locate engraved plastic laminate signs on or near each major item of mechanical equipment and each operational device. Provide signs for the following:

1. Main control and operating valves, including safety devices.
2. Meters, gauges, thermometers, and similar units.
3. Fans, blowers, primary balancing dampers, and mixing boxes.
4. Packaged HVAC central-station and zone-type units.

E. Text of Signs: In addition to name of identified unit, provide lettering to distinguish between multiple units, inform operator of operational requirements, indicate safety and emergency precautions, and warn of hazards and improper operations. Equipment signs shall include an identification of the area or other equipment served by the equipment being labeled.

3.09 VIBRATION AND DYNAMIC BALANCING

A. Vibration tolerances shall be as specified by the "International Research and Development Corporation", Worthington, Ohio, measured by the displacement, peak to peak, as follows:

1. All Fans: Below severity chart labeled "FAIR", maximum velocity of 0.0785 in/sec, peak.

2. Pump and Electric Motors: Below severity chart labeled "SLIGHTLY ROUGH", maximum vibration velocity of 0.157 in/sec, peak.

3. Compressors: Same as pumps.

B. Correction shall be made to all equipment, which exceeds vibration tolerances specified above. Final vibration levels shall be reported as described above.

3.10 TESTING

A. Provide all tests specified hereinafter and as otherwise required. Provide all test equipment, including test pumps, gauges, instruments, and other equipment required. Test all rotational equipment for proper direction of rotation. Upon completion of testing, certify to the Architect, in writing, that the specified tests have been performed and that the installation complies with the specified requirements and provide a report of the test observations signed by qualified inspector.

B. Ductwork: Test all air quantities as specified in Section 230593 - Testing, Adjusting and Balancing. Pressure tests per SMACNA.

C. Registers and Diffusers: Test for proper operation of manually operated control feature. Test all air quantities as specified in Section 230593 – Testing, Adjusting and Balancing.

D. Ductwork Specialties: Test all operable ductwork specialties for proper operation. Check all fire, smoke and fire/smoke dampers to ensure that they are 100% open.

E. Temperature Control: Test all control functions to assure that all systems are controlling as specified or as otherwise necessary and that all controls are adjusted to maintain proper room temperatures. The manufacturer's representative shall perform all tests.

END OF SECTION

SECTION 230593

TESTING, ADJUSTING AND BALANCING

PART 1 - GENERAL

1.01 APPLICABLE REQUIREMENTS

A. All work to be furnished and installed under this section shall comply with all the requirements of General Conditions, Supplemental Conditions, Division 01 - General Requirements, Section 230500 - Basic Materials and Methods, and other Sections in Division 23 specified herein.

1.02 WORK RELATED IN OTHER SECTIONS

A. Section 230500: Basic Materials and Methods

B. Section 230900: Controls and Instrumentation

C. Section 233113: Air Distribution

D. Division 26: Electrical.

1.03 SUMMARY

A. Scope: Extent of testing, adjusting and balancing work required by this Section is indicated on the drawings, in schedules, and by the requirements of this Section, and Section 230500 -Basic Mechanical Requirements.

B. Systems: Testing, adjusting and balancing specified in this Section shall include, but not be limited to, the following systems:

1. Air handling systems including supply, return and exhaust.
2. Air distribution ductwork including supply, return and exhaust.
3. Automatic temperature control system.
4. General exhaust systems.
5. Instruction of Owner's personnel for future balancing of systems.

C. Reference Standards

1. ASHRAE-Standard 111--1988 Practices for Measurement, Testing, Adjusting, and Balancing of Building Heating, Ventilation, Air Conditioning, and Refrigeration Systems.

2. ASHRAE —2003 HVAC Applications Handbook: Chapter 37--Testing, Adjusting and Balancing.

3. AABC--National Standards for Total System Balance.

4. NEBB--Procedural Standards for Testing, Balancing and Adjusting of Environmental Systems.

5. SMACNA--HVAC Systems--Testing, Adjusting and Balancing.

6. Sheet Metal Industry--Testing, Adjusting, Balancing Bureau (TABB) Certified Technician Standards, Procedures and Specifications.

7. American National Standards Institute (ANSI): Comply with the following:
   a. S1.4Specification For Sound Level Meters.
   b. S1.11Specification For Octave-Band and Fractional-Octave-Band Analog and Digital Filters.

1.04 QUALITY ASSURANCE

A. Contractors Qualifications: A specialist certified by the National Environmental Balancing Bureau (NEBB) or Associated Air Balance Council (AABC) with at least 5 years of experience in those testing, adjusting and balancing requirements similar to those required for this project, who is not the installer of the system to be tested and is otherwise independent of the project.

B. Acceptable Testing and Balancing Firms

1.
2.
3.
4.

C. Testing, adjusting, and balancing shall be performed by a certified NEBB technician or a certified AABC technician under direct field supervision of a Certified NEBB Supervisor or a Certified AABC Supervisor.

D. Penalty: The Contractor shall submit the name of the organization he proposes to employ for approval within 30 days after contract award. If the Contractor fails to submit the name of an acceptable agency within the specified time, a firm may be selected to accomplish the work, and this selection shall be binding upon the Contractor at no additional cost.

E. Retainages: In addition to any other sums retained or withheld pursuant to the provisions of this Contract, the amount of dollars will be withheld from payments to the contractor until such time as the work has been completed and accepted. In no event will this amount be paid to the Contractor prior to 60 days following acceptance of the project; during such time, the Contractor shall investigate and correct any reported deficiencies unless such deficiencies are a result of unauthorized tampering by building occupants.

F. Calibration of Testing Instruments: All measurement instruments used for testing, adjusting, balancing, and commissioning shall be calibrated. The time between the most recent calibration data and the final test report date shall not be over 6 months

G. Testing and balancing agency, as part of its contract, shall act as authorized inspection agency responsible to Consulting Engineer and Owner, and shall list all items that are installed incorrectly, require correction, or have not been installed in accordance with contract Drawings and Specifications, pertaining to air distribution, cooling and heating systems. The testing and balancing agency is required to provide written reports of all deficiencies and proposed recommendations to the Owner' Representative, Contractor, Architect and Engineer.

H. The testing and balancing agency shall provide with his bid a performance guarantee covering all phases of the work as herein specified.

I. The General and mechanical contractors shall cooperate with the selected testing and balancing agency in the following manner:

1. Provide sufficient time before final completion dates so that tests and balancing can be accomplished.

2. The various system installers, suppliers and contractors shall provide all required materials, labor and tools to make corrections when required without undue delay. Install balancing dampers as required by testing and balancing agency.

3. The contractor shall put all heating, ventilating and air conditioning systems and equipment into full operation and shall continue the operation of the same during each working day of testing and balancing.

4. Testing and balancing agency shall be kept informed of any major changes made to the system during construction, and shall be provided with a complete set of Record Drawings.

5. The General Contractor shall make space and other facilities available to the testing and balancing agency to enable their work to progress. The General Contractor shall schedule the work of other trades to avoid conflicts with this work.

1.05 SUBMITTALS

A. Conform to the Submittals requirements of Division 01.

B. Forms: The Contractor shall deliver a complete copy of either NEBB or AABC standard forms for testing and balancing work associated with the project. These forms shall serve as specific guidelines for producing final test report. Hybrid or non-standards forms are not acceptable. Data shall include, but not be limited to, a title page with building information, instrument lists, air flows, water flows, temperatures, sound levels, capacities, nameplate data.

C. Test Reports: Provide six (6) certified test reports, signed by the test and balance supervisor who performed the work. The final reports shall include identification and types of instruments used, and their most recent calibration date, and key plans identifying all inlets and outlets. Final test reports shall be typed. Hand written reports are not acceptable.

D. Maintenance Data: Include, in maintenance manuals, copies of certified test reports and identification of instruments.

E. Qualifications: The Contractor shall submit the certified individual qualifications of all persons responsible for supervising and performing the actual work and the name of the certifying engineer. Provide a reference list of five (5) similar size projects with contact person and telephone number.

1.06 AGENDA

A. Agenda: A preliminary report and agenda shall be submitted and approved prior to the start of testing and balancing work.

1. Review plans and specifications prior to installation of any of the affected systems, and submit a report indicating any deficiencies in the systems that would preclude the proper adjusting, balancing, and testing of the systems.

2. The agenda shall include a general description of each air and water system with its associated equipment and operation cycles for heating and cooling.

3. The agenda shall include a list of all air and water flows to be performed at all mechanical equipment.

4. The agenda shall incorporate the proposed selection points for sound measurements, including typical spaces as well as sound sensitive areas such as conference rooms.

5. The agenda shall also include specific test procedures and parameters for determining specified quantities (e.g. flow, drafts, sound levels) from the actual field measurements to establish compliance with contract requirements. Samples of forms showing application of procedures and calculations to typical systems shall be submitted.

6. Specific test procedures for measuring air quantities at terminals shall specify type of instrument to be used, method of instrument application (by sketch) and factors for:
   a. Air terminal configuration.
   b. Flow direction (supply or exhaust).
   c. Velocity corrections.
   d. Effective area applicable to each size and type of air terminal.
   e. Density corrections.

7. The agenda shall include identification and types of measurement instruments to be used, and their most recent calibration date.

1.07 JOB CONDITIONS

A. General: Do not proceed with testing, adjusting and balancing work until the following conditions have been met.

1. Work has been completed and is operable. Ensure that there is no latent residual work yet to be completed on the tested equipment.

2. Work scheduled for testing, adjusting and balancing is clean and free from debris, dirt and discarded building materials.

3. All architectural openings (doors, windows, and other openings) which may affect the operation of the system to be tested, adjusted, and balanced shall be at their normal states.

4. All related mechanical systems which may affect the operation of the system to be tested, adjusted, and balanced shall be at their normal operating conditions.

PART 2 - PRODUCTS

2.01 TEST HOLES

A. Test holes shall be provided in ducts, housings and pipes as necessary for the proper air and water measurements and to balance systems. At each location where ducts or plenums are insulated, test holes shall be provided with an approved extension with plug fitting.

2.02 PATCHING MATERIALS

A. Material: Seal, patch and repair ductwork, piping and equipment drilled or cut for testing purposes.

1. Plastic plugs with retainers may be used to patch drilled holes in ductwork and housings.

2. Piping shall be capped with materials the same as the piping system.

3. Insulation shall be neatly hemmed with metal or plastic edging, leaving test points visible for future testing.

2.03 TEST INSTRUMENTS

A. Standards: Utilize instruments and equipment of type, precision, and capacity as recommended in the NEBB "Procedural Standards for Testing, Adjusting, and Balancing of Environmental Systems" and AABC manual MN-1.

B. Test Instruments: All instruments used for measurements shall be accurate and calibration histories for each instrument shall be available for examination. Each test instrument shall be calibrated by an approved laboratory or by the manufacturer. A representative has the right to request instrument recalibration, or the use of other instruments and test methodology, where accuracy of readings is questionable.

C. Additional Instruments: Permanently installed measuring instruments, such as temperature and pressure gauges, shall be checked against transfer standard instruments. Any instrument which does not meet specification requirement shall be replaced or recalibrated.

D. Cone Instruments: The Contractor shall employ manufactured enclosure type cones, capable of air volume direct readings, for all diffuser/grille/register air flow measurements. The readout meters shall meet calibration requirements.

PART 3 - EXECUTION

3.01 PROCEDURES AND INSTRUMENTS, GENERAL

A. Requirements: All systems and components thereof shall be adjusted to perform as required by drawings and specifications.

B. Test Duration: Operating tests of heating and cooling coils, fans, and other equipment shall be of not less than four hours duration after stabilized operating conditions have been established. Capacities shall be based on temperatures and air and water quantities measured during such tests.

C. Instrumentation: Method of application of instrumentation shall be in accordance with the approved agenda.

1. All instruments shall be applied in accordance with the manufacturer's certified instructions.

2. All labor, instruments, and appliances required shall be furnished by the Contractor. Permanently installed instruments used for the tests (e.g., flow meters and Btu meters) shall not be installed until the entire system has been cleaned and ready for operation.

3.02 DUCT SMOKE DETECTORS

A. The testing and balancing agency shall direct the placement of all duct mounted smoke detectors.

1. Obtain information from the Contractor who is to furnish the smoke detectors on the proper device placement and installation limitations and on the proper differential pressure across the sampling tubes of the duct detectors.

2. Based on the submitted manufacturer's installation guidelines indicate the proper mounting location to the installing Contractor.

B. After the installation of all smoke detectors test them again in the final installation position and report differential pressures.

3.03 AIR SYSTEM PROCEDURES

A. Adjustments: Adjust all air handling systems to provide approximate design air quantity to or through, each component, and to maintain stable and comfortable interior temperatures, free of drafts or stagnant conditions. Adjusting and balancing of all systems shall be conducted during periods of the year approximating maximum seasonal operation.

B. Equalizers: Equalizing devices shall be adjusted to provide uniform velocity across the inlets (duct side for supply) of terminals prior to measuring flow rates.

C. Balance: Flow adjusting (volume control) devices shall be used to balance air quantities (i.e., proportion flow between various terminals comprising system) to the extent that their adjustments do not create objectionable air motion or sound (i.e., in excess of specified limits).

1. Balancing between runs (submains, branch mains, and branches) generally shall be accomplished by flow regulating devices at, or in, the divided-flow fitting.

2. Restriction imposed by flow regulating devices in or at terminals shall be minimal.

3. Final measurements of air quality shall be made after the air terminal has been adjusted to provide the optimum air patterns of diffusion.

D. Fan Adjustment: Total air system quantities, generally, shall be varied by adjustment of fan speeds or axial-flow fan wheel blade pitch. Damper restriction of a system's total flow may be used only for systems with direct-connected fans (without adjustable pitch blades), provided system pressure is less than 1/2-inch W.G. and sound level criteria is met.

E. Air Measurement: Where air quantity measuring devices are specified in other sections such systems shall be used as a cross-check of portable measuring equipment.

1. Except as specifically indicated herein, pitot tube traverses shall be made of each duct to measure air flow therein. Pitot tubes, associated instruments, traverses, and techniques shall conform to the ASHRAE "Handbook Fundamentals Inch Pound Edition."

2. For ducts serving modular office areas with movable partitions, which are subject to change, pitot tube traverses may be omitted provided the duct serves only a single room or space and its design volume is less than 2000 cfm. In lieu of pitot tube traverses, airflow in the duct shall be determined by totaling volume of individual terminals served, measured as described herein.

3. Where duct's design velocity and air quantity are both less than 1000 (fpm/cfm), air quantity may be determined by measurements at terminals served.

F. Test Holes: Test holes shall be in a straight duct, as far as possible downstream from elbows, bends, take-offs, and other turbulence generating devices, to optimize reliability of flow measurements.

G. Air Terminal Balancing: Generally, measurement of flow rates by means of velocity meters applied to individual terminals, with or without cones or other adapters, shall be used only for balancing. Measurement of air quantities at each type of air terminal (inlet and outlet) shall be determined by the method approved for the balancing agenda. Laboratory tests shall be conducted to prove of methodology when so directed. Such tests shall be conducted in conformance with applicable ASHRAE or American Society of Mechanical Engineers (ASME) codes and shall be made at no cost.

H. Air Motion: Air motion and distribution shall be as specified and indicated on drawings. The Contractor at no additional cost shall, in addition to air motion measurements, make smoke tests wherever requested to demonstrate the air distribution from air terminals.

I. Air System Test and Balance Procedure: Perform the following tests, and balance each system in accordance with the following requirements:

1. Test and adjust blower RPM to design requirements.

2. Test and record motor full load amperes.

3. Make pitot tube traverse of main supply ducts and obtain design CFM at fans.

4. Test and record system pressures, suction and discharge.

5. Test and adjust system for design recirculated air, CFM.

6. Test and adjust system for design CFM outside air.

7. Test and record entering air temperatures.

8. Test and record leaving air temperatures.

9. Adjust all supply, return and exhaust air ducts to proper design CFM.

10. Adjust all zones to proper design CFM, supply and return.

11. Test and adjust duct systems and each diffuser, grille, and/or register to within 10% of design requirements.

12. Each grille, diffuser and register shall be identified as to location and area.

13. Size, type and manufacturer of VAV boxes, diffusers, grilles, registers and all tested equipment shall be identified and listed. Manufacturer's ratings on all equipment shall be used to make required calculations.

14. Readings and tests of diffusers, grilles and registers shall include required FPM velocity and test resultant velocity, required CFM and test resultant CFM after adjustment.

15. In cooperation with the control manufacturer's representative, setting adjustments of automatically operated dampers to operate as specified, indicated, and/or noted. Testing

agency shall check all controls requiring adjustment by control installers. Room thermostats shall be checked for cooling and heating response.

16. All diffusers, grilles and registers shall be adjusted to minimize drafts in all areas.

17. Adjust overall system balances to allow all self-closing exterior doors to close from any open position. Maximum interior air pressure in a 100% outside air intake mode shall not exceed 0.05" static pressure relative to the outside air pressure.
18. As part of the work of this contract, the HVAC contractor shall make any changes in the pulleys, belts and dampers or the addition of dampers required for correct balance as recommended by air balance agency, at no additional cost to Owner.

19. After air balancing is completed and RPM determined, HVAC Contractor shall provide fixed pitch pulleys.

20. All mixing boxes, VAV air valves, control dampers, smoke dampers and similar devices which operate at 100% shut off shall be tested for leakage.

3.04 AIR SYSTEM DATA

A. Report: The certified report shall include for each air handling system the data listed below.

1. Equipment (Fan or Factory Fabricated Station Unit):
   a. Installation data
      1) Manufacturer and model
      2) Size
      3) Arrangement, discharge and class
      4) Motor hp, voltage, phase, cycles, and full load amps
      5) Location and local identification data
   b. Design data
      1) Data listed in schedules on drawings and specifications.
   c. Fan recorded (test) data
      1) cfm
      2) static pressure
      3) rpm
      4) motor operating amps
      5) motor operating bhp

2. Duct Systems:
   a. Duct air quantities (maximum and minimum) - main, submains, branches, outdoor (outside) air, total air, and exhaust:
      1) duct size(s)
      2) number of pitot tube (pressure measurements)
      3) sum of velocity measurements (Note: Do not add pressure measurements)
      4) average velocity
      5) recorded (test) cfm
      6) design cfm
   b. Individual air terminals
      1) terminal identification supply or exhaust, location and number designation
      2) type size, manufacturer and catalog identification applicable factor for application, velocity, area, etc., and designated area
      3) design and recorded velocities - fpm (state "core," "inlet," etc., as applicable)
      4) design and recorded quantities - cfm (deflector vane or diffusion cone settings)

3.05 CERTIFIED REPORTS

A. Submittals: Six (6) copies of the reports described herein, covering air and water system performance, air motion (fpm), and sound pressure levels, shall be submitted prior to final tests and inspection.

B. Instrument Records: Types, serial numbers, and dates of calibration of all instruments shall be included.

C. Reports: Reports shall conspicuously identify items not conforming to contract requirements, or obvious malfunction and design deficiencies.

D. Certification: Certification shall include checking of adherence to agenda, of calculations, of procedures, and evaluation of final summaries.

3.06 FINAL COMMISSIONING TESTS, INSPECTIONS AND ACCEPTANCE

A. Scope: Test shall be made to demonstrate that capacities and performance of air and water systems comply with contract requirements.

1. At the time of final inspection, the Contractor shall recheck, random selection of data (water and air quantities, air motion, and sound levels) recorded in the certified report. In addition, all courtrooms, auditoriums, and conference rooms shall be rechecked.

2. Points and areas for recheck shall be selected by the commissioning team.

3. Measurement and test procedures shall be the same as approved for work forming basis of certified report.

4. Selections for recheck (specific plus random), in general, will not exceed 25 percent of the total number tabulated in the report, except that special air systems may require a complete recheck for safety reasons.

B. Retests: If random tests elicit a measured flow deviation of 10 percent or more from, or a sound level of 2 db or more greater than, that recorded in the certified report listings, as 10 percent or more of the rechecked selections, the report shall be automatically rejected. In the event the report is rejected, all systems shall be readjusted and tested, new data recorded, new certified reports submitted, and new inspection tests made, all at no additional cost. Retainage time shall be based on the date of the final acceptance of the certified report.

C. Marking of Settings: Following final acceptance of certified reports, the settings of all valves, splitters, dampers, and other adjustment devices shall be permanently marked by the Contractor so that adjustment can be restored if disturbed at any time. Devices shall not be marked until after final acceptance.

END OF SECTION

SECTION 230700

HVAC INSULATION

PART 1 - GENERAL

1.01 APPLICABLE REQUIREMENTS

A. All work to be furnished and installed under this section shall comply with all the requirements of General Conditions, Supplemental Conditions, Division 01 - General Requirements, and Section 230500 - Basic Materials and Methods, and other Sections in Division 23 specified herein.

1.02 SCOPE

A. All work to be furnished and installed under this Section shall include, but not necessarily be limited to, providing insulation for the following:

1. Ductwork

a. All supply air ductwork, unless otherwise shown on drawings.
b. All return air ductwork, unless otherwise shown on drawings.
c. Acoustical duct lining, in vertical/horizontal supply and return ducts within twenty feet (20') of air handling equipment and where otherwise shown on drawings.
d. Outside air ductwork in return plenums, mechanical rooms and in freezing climates

2. Piping:

a. Refrigerant hot gas and suction piping.

3. Plenums and equipment rooms, as noted.

B. Types of mechanical insulation specified in this Section include the following:

1. Flexible elastomeric closed cell insulation
2. Fiberglass duct insulation.
3. Polymide Foam Acoustic duct liner.
4. Flexible unicellular duct insulation.
5. Calcium silicate duct insulation.
6. Insulation jackets.
7. Insulation accessories.

1.03 RELATED WORK SPECIFIED ELSEWHERE

A. Section 220501: Plumbing.

B. Section 230500: Basic Materials and Methods.

C. Section 232113: HVAC Piping, Valves and Specialties.

1.04 DEFINITIONS

A. Ambient: The air temperature to be maintained in a conditioned room. Typically between 70°F and 78°F.

B. Insert: Spacer placed between the pipe support system and the piping to allow for the space required for insulation.

C. Insulation Group (IG): Definition of Insulation Materials and Operating Temperatures.

D. Insulation Shield: Buffer material placed between the pipe support system and the insulation to prevent the insulation material from crushing.

E. Jacket: Protective covering over the pipe insulation; may be factory applied such as “all service jacket” or field applied to provide additional protection; of such materials as canvas, PVC, aluminum or stainless steel.

F. Piping Insulation: Thermal insulation applied to prevent heat transmission to or from a piping system.

G. Vapor Barrier Jacket: Insulation jacket material that impedes the transmission of water vapor.

H. Freezing Climate: Where outdoor design temperature is less than 33° F, as stated in ASHRAE fundamentals under 99% column for winter design conditions.

1.05 QUALITY ASSURANCE

A. Codes and Standards: Provide products conforming to the requirements of the following:

1. American Society for Testing and Materials (ASTM): Manufacture and test insulation in accordance with the ASTM Standards, including:

a. B209 - Specification for Aluminum and Aluminum-Alloy Sheet and Plat.
b. C165 - Recommended Practice for Measuring Compressive Properties of Thermal Insulation.
c. C167 - Test Methods for Thickness and Density of Blanket or Batt Thermal Insulations.
d. C177 - Test Method for Steady-State Heat Flux Measurements and Thermal Transmission.
e. Properties by Means of the Guarded-Hot-Plate Apparatus.
f. C195 - Specification for Mineral Fiber Thermal Insulating Cement.
g. C196 - Specification for Expanded or Exfoliated Vermiculite Thermal Insulating Cement.
h. C302 - Test Method for Density of Preformed Pipe-Covering-Type Thermal Insulation.
i. C303 - Test Method for Density of Preformed Block-Type Thermal Insulation.
j. C305 - Test for Thermal Conductivity of Pipe Insulation.
k. C356 - Test for Linear Shrinkage of Preformed High-Temperature Thermal Insulation.
l. C411 - Test for Hot-Surface Performance of High Temperature Thermal Insulation.
m. C423 – Standard Test Method for Sound Absorption and Sound Absorption Coefficients by the Reverberation Room Method.
n. C449 - Specification of Mineral Fiber Hydraulic-Setting Thermal Insulating and Finishing Cement.
o. C518 - Standard Test Method for Steady-State Thermal Transmission Properties by Means of the Heat Flow Meter Apparatus.
p. C533 - Specification for Calcium Silicate Block and Pipe Thermal Insulation.

q. C534 - Specification for Preformed Flexible Elastomeric Cellular Thermal Insulation in Sheet and Tubular Form.
r. C547 - Specification for Mineral Fiber Preformed Pipe Insulation.
s. C552 - Specification for Cellular Glass Block and Pipe Thermal Insulation.
t. C553 - Specification for Mineral Fiber Blanket-Type Pipe Insulation (Industrial Type).
u. C592 - Mineral Fiber Blanket Insulation and Blanket-Type Pipe Insulation (Metal-Mesh Covered).
v. C612 - Specification for Mineral Fiber Block and Board Thermal Insulation.
w. C916 - Standard Specification for Adhesives for Duct Thermal Insulation.
x. C921 - Practice for Determining Properties of Jacketing Materials for Thermal Insulation.
y. C1104 - Standard Test Method for Determining the Water Vapor Sorption of Unfaced Mineral Fiber Insulation.
z. C1071 - Standard Specification for Thermal and Acoustical Insulation.
aa. C1338 - Standard Test Method for Determining Fungi Resistance of Insulation Materials and Facings..
bb. E84 - Test Method for Surface Burning Characteristics of Building Materials.
cc. E119 - Test for Fire Resistance.
dd. G21 - Standard Practice for Determining Resistance of Synthetic Polymeric Materials to Fungi.
ee. G22 - Standard Practice for Determining Resistance of Synthetic Polymeric Materials to Bacteria.

2. American Society of Heating, Refrigerating, and Air-Conditioning Engineers (ASHRAE): Provide and install pipe and duct insulation in accordance with the following ASHRAE Standard:

   a. 90 Energy Conservation in New Building Design.

3. National Fire Protection Association (NFPA): Manufacture insulation in accordance with the following NFPA standards:

   a. 255 Test Methods, Surface Burning Characteristics of Building Materials.

B. Do not provide materials with flame proofing treatments subject to deterioration due to the effects of moisture or high humidity.

C. Flame/Smoke Rating: Provide composite mechanical insulation (insulation, jackets, coverings, sealers, mastics and adhesives) with flame-spread index of 25 or less, and smoke-developed index of 50 or less, as tested by ASTM E84 (NFPA 255) Method. In addition, the products, when tested, shall not drip flame particles, and flame shall not be progressive. Provide Underwriters Laboratories, Inc., label or listing; or satisfactory certified test report from an approved testing laboratory to prove the fire hazard ratings for materials proposed for use do not exceed those specified.

D. Corrosiveness: Provide insulation such that when tested in accordance with the following test, the steel plate in contact with the insulation shows no greater corrosion than sterile cotton in contact with a steel plate for comparison.

1. Test Specimen: Two specimens shall be used, each measuring 1” by 4” by approximately ½” thick.

2. Apparatus: Provide a humidity test chamber in which two polished-steel test plates, 1” wide, 4” long and 0.020” thick, shall be placed. Plates shall be clear finish, cold-rolled strip steel, American quality, quarter hard, temper No. 3, weighing 0.85 lb/sq. ft.

3. Procedure: The steel test plates shall be rinsed with cp benzol until their surfaces are free from oil and grease and allowed to dry. One piece of cold-rolled steel shall be placed between the two insulation specimens and secured with tape or twine. The test specimen and uncovered plate shall be suspended vertically in an atmosphere having a relative humidity of 95% (plus or minus 3%), and a temperature of 120°F (plus or minus 3°F), for 96 hours, and then be examined for corrosion.

E. Insulation thickness shall be the greater standard of that specified here or the State energy conservation requirements.

1.06 SUBMITTALS

A. Product Data: Submit manufacturer's technical product data and installation instructions for each type of mechanical insulation. Submit schedule showing manufacturer's product number, K-value, thickness, and furnished accessories for each mechanical system requiring insulation. Also furnish necessary test data certified by an independent testing laboratory. Submit samples.

B. Maintenance Data: Submit maintenance data and replacement material lists for each type of mechanical insulation. Include this data and product in maintenance manual.

1.07 DELIVERY, STORAGE, AND HANDLING

A. Deliver insulation, coverings, cements, adhesives, and coating to the site in containers with manufacturer's stamp or label affixed showing fire hazard indexes of products.

B. Store and protect insulation against dirt, water, chemical, and mechanical damage. Do not install damaged or wet insulation; remove from project site.

PART 2 - PRODUCTS

2.01 MANUFACTURERS

A. Johns Manville, Owens-Corning, Knauf, Armstrong, Pittsburgh-Corning, Certainteed, Halstead, Rubatex, 3M FireMaster, Pabco, Reflectix, or approved equal. Manufacturer and insulation types listed below indicate a minimum acceptable level of quality required for each classification.

2.02 DUCTWORK INSULATIONS

A. Flexible Fiberglass Blanket: Johns Manville Microlite Xc, formaldehyde-free Type 75 Flexible Blanket:

1. Application: Insulation wrap for ductwork, or other HVAC systems.

2. 'K' Value: ASTM C553-92, 0.27 Btu•in./(hr•ft²•ºF) at 75°F installed full thickness.

3. Density: 0.75 lb/cu ft.

4. Vapor Barrier Jacket: FSK (Foil-Scrim-Kraft) aluminum foil faced reinforced with fiberglass yarn and laminated to fire-resistant kraft.

5. Installation: See Part 3 below.

B. Rigid Fiberglass Board: Johns Manville Linacoustic R-300, Type II duct board:

1. Application: Lining insulation for HVAC plenums and ductwork.

2. 'K' Value: ASTM C1071, 0.23 Btu•in./(hr•ft²•ºF) at 75°F.

3. Density: 3.0 lb/cu ft.

4. Vapor Barrier Jacket: FSK (Foil-Scrim-Kraft) aluminum foil faced reinforced with fiberglass yarn and laminated to fire-resistant kraft.

5. Installation: See Part 3 below.

C. Fiberglass Acoustic Duct Liner: Johns Manville Linacoustic R-300, RC, or HP with Anti-Microbial Treatment.

1. Application: Duct lining for acoustic or thermal purposes.

2. 'K' Value: ASTM 1071, 0.23 Btu•in./(hr•ft²•ºF) at 75°F.

3. Noise Reduction Coefficient: 0.65 or higher based on "Type A mounting."

4. Maximum Velocity on Mat or Coated Air Side: 5,000 ft/min.

5. Adhesive: UL listed waterproof type compliant with ASTM C916.

6. Fasteners: Duct liner galvanized steel pins, welded or mechanically fastened.

D. Polymide Foam Acoustic Duct Liner: Evonic Industries model SOLCOUSTIC, or equal, Flexible Blanket:

1. Greenguard certified, low VOC.

2. Polymide foam insulation with acrylic polymer airstream coating.

3. K' Value: ASTM C518, 0.30 Btu•in./(hr•ft²•ºF) at 75°F.

4. R' value per inch thickness: ASTM C518, 3.3 (hr•ft²•ºF) / Btu at 75°F.

5. Density: ASTM D 3574, 0.80 lb/ft3.

6. Water vapor sorbtion: ASTM C 1104, less than 2% by weight.

7. Fungal and bacteria resistance: ASTM G 21/22, no growth.

8. Noise Reduction Coefficient: ASTM C 423, 0.70 or higher based on "Type A mounting."

9. Maximum Velocity on Mat or Coated Air Side: 5,000 ft/min.

10. Maximum operating temperature: 250 degrees F.

11. Flame spread index: ASTM E84, less than 25

12. Smoke developed index: ASTM E84, less than 50

13. Adhesive: UL listed waterproof type compliant with ASTM C916.

14. Fasteners: Duct liner galvanized steel pins, welded or mechanically fastened.

E. Round Duct Liner: Johns Manville Spiracoustic Plus; with Anti-Microbial Treatment.

1. Application: Round duct lining for acoustic or thermal purposes.

2. 'K' Value: ASTM C518, 0.23 Btu•in./(hr•ft²•ºF) at 75°F.

3. Noise Reduction Coefficient: 0.70 as per ASTM C427. (Type A mounting.)

4. Maximum Velocity: 4,000 ft/min.

F. Hydrous Calcium Silicate: Schyller Thermo-12/Gold ASTM C533; Rigid Molded Block Insulation; Asbestos-Free Coded Throughout Material Thickness and Maintained Throughout Temperature Range:

1. “K” Value: 0.40 Btu•in./(hr•ft²•ºF) at 300ºF.

2. Maximum Service Temperature: 1,200°F.

3. Compressive Strength (block): Minimum of 200 psi to produce 5% compression at 1½" thickness.

4. Tie Bands: Secure blocks in places with staggered joints using ⅜" or ½" stainless steel bands on 12” centers.

G. Field Applied Jackets (For Exterior Applications):

1. Longitudinal seams shall not be located on top of ducts when exposed to outdoor environment.

2. Stainless Steel Jacket: Type 304 stainless steel, 0.010” minimum (smooth/corrugated) finish.

3. Aluminum Jacket: 0.016” aluminum with factory applied moisture barrier positioned such that the longitudinal overlap provides a watershed.

4. Circumferential joints shall be wide enough to provide weather-proofing jacket.

5. Secure jacket with ⅜" or ½" stainless steel bands on 12” centers.

H. Field Applied Jackets (For Interior Applications):

1. All longitudinal seams shall be located on bottom of ductwork

2. PVC Plastic: Johns Manville Zeston 2000. One piece molded type fitting covers and jacketing material, gloss white. Connect with tacks and pressure sensitive color matching vinyl tape.

2.03 PIPE INSULATIONS

A. Flexible Elastomeric Closed Cell Thermal Insulation: Armacel, Rubatex k-flex ECO, closed-cell, halogen free, elastomeric insulation. Comply with ASTM-C177, ASTM E 84 and UL 181.

1. 'K' Value: 0.27 at 75°F.
2. Density: 3.0 to 6.0 lbs./cu.ft.
3. Maximum Service Temperature: 260°F.
4. Seal all seams and joints with contact adhesive.

B. Field Applied Jackets (For Interior Applications):

1. All longitudinal seams shall be located on bottom of pipes.

2. PVC Plastic: Johns Manville Zeston 2000. One piece molded type fitting covers and jacketing material, gloss white. Connect with tacks and pressure sensitive color matching vinyl tape.

3. Canvas Jacket: UL listed fabric, 6 oz/sq. yd. plain weave cotton, treated with dilute fire retardant lagging adhesive.
4. Aluminum Jacket: 0.016" thick sheet, [smooth/embossed] finish, with longitudinal slip joints and 2" laps, die shaped fitting covers with factory attached protective liner.

5. Secure aluminum jackets with 3/8" or ½" stainless steel bands on 12" centers.

C. Field Applied Jackets (For Exterior Applications):

1. All longitudinal seams, on horizontal pipe runs, shall be installed on the bottom of pipes.

2. Aluminum Jacket: 0.016" (minimum) thick sheet, [smooth/embossed] finish, with longitudinal slip joints and 2" laps, die shaped fitting covers with factory attached protective liner.

3. Stainless Steel Jacket: Type 304 stainless steel, 0.010" minimum (smooth/corrugated) finish.

4. Secure stainless steel or aluminum jackets with ⅜" or ½" stainless steel bands on 12" centers.

5. Manufacturers: Pabco, Childers, RPR, or approved equal.

D. Removable Covers:

1. Provide removable covers on pumps, valves, air separators, vents, fittings, flanges, strainers, traps, etc., where periodic maintenance or removal of insulation may is required.

2. Use of premolded fittings with PVC covers is acceptable.

3. Use of lace-on type insulating blankets is acceptable.

PART 3 - EXECUTION

3.01 EXAMINATION AND PREPARATION

A. Verify that piping and ductwork has been tested for leakage in accordance with specifications before applying insulation materials. All piping and ductwork shall be inspected by Owner's Representative prior to installation of insulation. Any insulation applied prior to inspection shall be removed and new insulation applied at no additional cost to Owner. Notify Owner's Representative five (5) working days prior to insulation installation.

B. Verify that all surfaces are clean, dry and free of foreign material.

3.02 INSTALLATION

A. General:

1. Install materials in accordance with manufacturer's recommendations, building codes and industry standards.

2. Remove and replace any insulation that has become wet or damaged during the construction process.

3. Continue insulation and vapor barrier at penetrations and duct supports, except where prohibited by code. Instances where this is required include:

a. Ductwork support angle or struts. To prevent crushing of low density insulation, provide separator or high density insulation at point of support. Vapor barrier to continue unbroken at point of support.

B. Ductwork –Insulation on the Duct Exterior:

1. Provide insulated ductwork conveying air below ambient temperature (below room temperature) with vapor retardant jacket. Seal all vapor retardant jacket seams and penetrations with UL listed tapes or vapor retardant adhesive.

2. Provide insulated ductwork conveying air above ambient temperature (above room temperature) with or without vapor retardant jacket. Where service access is required, bevel and seal ends of insulation.

3. All exposed exterior metallic ductwork exposed or covered with cladding is to be built with a crown to shed moisture.

4. Continue insulation through walls, sleeves, hangers, and other duct penetrations except where prohibited by code.

5. The insulation shall be firmly wrapped around the ducts with all joints lapped a minimum of 2". The vapor barrier shall be sealed with FSK or metallic pressure sensitive tape. Installed thickness shall not exceed 25% compression. Secure insulation with 16 gage soft annealed black or galvanized wire spaced not more than 12" on centers for straight runs of duct and 6" on centers for elbows and fittings

6. The underside of duct work 24” or greater in width shall be secured with mechanical fasteners and speed clips spaced approximately 18” on center. The protruding ends of the fasteners shall be cut off flush after the speed clips are installed, and then, when required, sealed with the same tape as specified above.

7. For ductwork exposed in mechanical equipment rooms below 7’ or in finished spaces, finish with Johns Manville Zeston 2000 PVC jacket or aluminum or stainless steel jacket.

8. For interior vapor/moisture duct applications, install fiberglass insulation unless specifically indicated otherwise on drawings. Install to meet manufacturer’s requirements and as required by local code authorities.

9. For exterior applications, provide insulation with a weather protection jacket.

10. For exterior vapor duct applications, install fiberglass insulation with weatherproof jacket.

C. Duct Liner:

1. Adhere insulation to sheet metal with a UL listed adhesive. Adhesive shall be applied to the sheet metal with a minimum coverage of 90%.

2. Secure insulation with mechanical liner fasteners as indicated by SMACNA or manufacturer. Pin length should be as recommended by the liner manufacturer.

3. All exposed edges of the liner must be factory or field coated. Unless factory coated, all transverse edges and longitudinal joints of the duct liner shall be coated. For systems operating at 4,000 fpm or higher, a metal nosing must be installed in all liner leading edges.

4. Repair liner surface penetrations with UL listed adhesive.

5. Duct dimensions indicated on plans are net inside dimensions required for airflow. Increase duct size to allow for insulation thickness.

D. Piping Insulation:

1. Locate insulation and cover seams in least visible locations unless otherwise specified.

2. Neatly finish insulation at supports, protrusions, and interruptions.

3. Provide insulated dual temperature pipes or cold pipes conveying fluids below ambient temperature with vapor retardant jackets with self sealing laps. Insulate complete system.

4. For insulated pipes conveying fluids above ambient temperature, secure jackets with self sealing lap or outward clinched, expanded staples. Bevel and seal ends of insulation at equipment, flanges, and unions.

5. Provide insert between support shield and piping on piping 1½" diameter or larger. Fabricate of Johns Manville Thermo-12, or other heavy density insulating material suitable for temperature. Insulation inserts shall not be less than the following lengths:

   a. 1½" to 2½" pipe size 10" long

6. Use of metal saddles is acceptable as specified in Section 230500. Fill interior voids with segments of insulation matching adjoining pipe insulation.

7. Use of pipe hangers designed as an insulation coupling is acceptable in lieu of saddles and other devices. Klo-Shure coupling or equal.

8. For pipe exposed in mechanical equipment rooms or in finished spaces below 7 feet above finished floor, finish with Johns Manville Zeston 2000 PVC jacket and fitting covers, or aluminum or stainless steel jacket.

9. Where pumps, valves, strainers, etc., with insulation require periodic opening for maintenance, repair, or cleaning, install insulation in such a manner that it can be easily removed and replaced without damage. Use of premolded covers or lace-on type insulation blankets is required.

10. For exterior applications:

a. Provide weather protection jacket. Insulated pipe lengths, pumps, fittings, joints, and valves shall be covered with aluminum jacket or stainless steel jacket. Jacket seams shall be located on bottom side of horizontal piping. All lateral joints shall be caulked with a minimum 20-year silicone sealant (clear). All longitudinal joints, except those at the bottom of a horizontal pipe run, shall be caulked with a minimum 20-year silicone sealant (clear).

b. Apply weather-resistant protective finish such as WB Armaflex to flexible elastomeric insulation. Insulation seams shall be located on the bottom side of horizontal piping. All lateral and longitudinal joints to be sealed with low V.O.C., UV inhibitive adhesive, such as Armaflex 520 BLV adhesive.

11. For underground installations, install per manufacturer's written instructions and recommendations.

12. When maintenance or service access for equipment will result in foot traffic over floor mounted insulated piping the contractor is to fabricate a permanent removable walkway to prevent damage to the piping and insulation.

3.03 DUCTWORK INSULATION SCHEDULE

A. All insulation thicknesses shall meet or exceed state energy code and mechanical code requirements as noted below. Minimum thermal resistance in range of 4.2 to 4.6 per inch of thickness. Insulation thicknesses are based on fiberglass insulation and may be adjusted for equivalent insulation values for materials with superior “K” factors.

B. All air distribution system ducts and plenums, but not limited to, building cavities, mechanical closets, air handler boxes, and support platforms uses as ducts or plenums, shall be installed, sealed , and insulated to meet the requirements of the code. Portions of supply-air and return-air ducts conveying heated or cooled air located in one or more of the following spaces shall be insulated to a minimum level of R-8.

1. In a space between the roof and an insulated ceiling.

2. In a space directly under a roof with fixed vents or opening to the outside or unconditioned spaces

3. In an unconditioned crawlspace.

4. In other unconditioned spaces.

C. Flexible Fiberglass

	THICKNESS (inches)	**FINISH**	**REMARKS**
Supply ducts within building envelope	1-1/2	FSK	
Supply or return duct installed as exposed ductwork in the occupied space.	0		Except where noted on drawings for acoustical reasons
Return ducts within building envelope	1-1/2	FSK	
Exterior/Outside supply and return ductwork sandwiched in double wall sheet metal	2-1/2	FSK	* or a thickness resulting in compressed R value=8

	THICKNESS (inches)	FINISH	REMARKS
Supply and return ductwork located as described in 3.3.B above.	2		
Exhaust ducts within 10 ft. of exterior openings	2	FSK	
Exhaust ducts and ventilation equipment casing exposed to outdoor air	2	FSK	

D. Thicknesses in the above table shall have insulation values as follows: 1 1/2 "= R-6, 2" = R-8.0, 3" = R-12. Greater thicknesses are permitted to achieve identical values if space constraints allow.

E. Rigid Fiberglass

	THICKNESS (inches)	FINISH	REMARKS
Outside air intake ducts	1-1/2	FSK	
Interior Plenums	1-1/2	FSK	
Exterior Plenums	2	FSK	
Supply, return and relief ducts in mechanical rooms and parking garages	2	FSK	
Vapor/moisture ducts installed exterior to the building envelope.	1-1/2	FSK	Provide jacketing on exterior ducts
Exterior ductwork sandwiched in double wall sheet metal	2	FSK	

F. Duct Liner:

	THICKNESS (inches)	FINISH	REMARKS
Where indicated	1" unless otherwise noted on plans	Linacoustic	
Exterior ductwork in sandwiched in double wall sheet metal	2	Linacoustic	
Within 20' of Air Handling Unit in supply and return ducts	1	Refectix Natural Fiber	
Within 20' of Air Handling Unit in supply and return ducts	1	Solcoustic	

G. Duct Liner (round):

	THICKNESS (inches)	FINISH	REMARKS
Where indicated	1	Spiracoustic	

3.04 PIPING INSULATION SCHEDULE

A. All insulation thicknesses shall meet or exceed state energy code requirements as noted below. Increase thickness ½" if exposed to exterior ambient air. Minimum thermal resistance in range of 4.2 to 4.6 per inch of thickness. Insulation thicknesses are based on fiberglass insulation and may be adjusted for equivalent insulation values for materials with superior "K" factors.

B. Elastometric Foam (Closed Cell):

	PIPE SIZE (inches)	**THICKNESS (inches)**	**REMARKS**
Condensate drain pipes	All Sizes	½	
Refrigerant suction and hot-gas piping	All Sizes	3/4	Provide aluminum jacket on exterior insulated piping.
Refrigerant liquid piping	All Sizes	3/4	Provide on all piping concealed in structure and close proximity to likely human contact.

END OF SECTION

SECTION 232300

REFRIGERANT PIPING SYSTEMS

PART 1 - GENERAL

1.01 APPLICABLE REQUIREMENTS

A. All work to be furnished and installed under this section shall comply with all the requirements of General Conditions, Supplemental Conditions, Division 01 - General Requirements, Section 230500 - Basic Materials and Methods, and other Sections in Division 23 specified herein.

1.02 SCOPE

A. Includes, but not limited to:

1. Furnish and install piping and piping specialties for refrigeration systems serving split system air conditioning units.

1.03 RELATED WORK SPECIFIED ELSEWHERE

A. Section 230500: Basic Materials and Methods

B. Section 230700: Mechanical Insulation

C. Section 238125: Mini-Split Air Conditioning Units

D. Division 26: Electrical

1.04 QUALITY ASSURANCE

A. Qualifications: A refrigeration contractor licensed by the State shall install refrigerant piping.

PART 2 - PRODUCTS

2.01 REFRIGERANT PIPING

A. Meet requirements of ASTM B 280-88, "Specification for Seamless Copper Tube for Air Conditioning & Refrigeration Field Service", hard drawn straight lengths.

B. Pipe: Acceptable alternatives are

1. ASTM B88, Type K or Type L copper tubing

2. AC/R pipe.

C. Do not use pre-charged refrigerant lines more than 50 feet in length.

2.02 REFRIGERANT FITTINGS

A. Wrought copper with long radius elbows.

B. Approved Manufacturers:

1. Mueller Streamline

2. Nibco, Inc.

3. Grinnell

4. Elkhart Products Corp.

2.03 SUCTION LINE TRAPS

A. Manufactured standard one-piece traps.

2.04 CONNECTION MATERIAL

A. Brazing Rods:

1. Copper to Copper Connections:
   a. AWS Classification BCuP-4 Copper Phosphorus (6% silver).
   b. AWS Classification BCuP-5 Copper Phosphorus (15% silver).

2. Copper to Brass or Copper to Steel Connections
   a. AWS Classification BAg-5 Silver (45% silver)

3. Do not use rods containing Cadmium.

2.05 FLUX

A. Approved Manufacturers

1. "Stay-Silv white brazing flux" by J.W. Harris Co.

2. High quality silver solder flux by Handy & Harmon.

2.06 EXPANSION VALVES

A. For pressure type distributors, externally equalized with stainless steel diaphragm, and same refrigerant in thermostatic elements as in system.

B. Size valves to provide full rated capacity of cooling coil served. Coordinate selection with evaporator coil and condensing unit.

C. Approved Manufacturers:

1. Alco

2. Henry

3. Mueller

4. Parker

5. Singer

6. Sporlan

2.07 FILTER-DRIER

A. On lines 3/4 inch outside diameter and larger, filter-drier shall be replaceable core type with non-ferrous casing and Schraeder type valve.

B. On lines smaller than 3/4 inch outside diameter, filter-drier shall be sealed type using flared copper fittings.

C. Size shall be full line size.

D. Approved Manufacturers:

1. Alco

2. Mueller

3. Parker

4. Sporlan

5. Virginia

2.08 SIGHT GLASS

A. Combination moisture and liquid indicator with protection cap.

B. Sign glass shall be full line size.

C. Sight glass connections shall be solid copper or brass, no copper-coated steel sight glasses allowed.

D. Approved Manufacturers:

1. Alco

2. Asco

3. Mueller

4. Parker

5. Sporlan

2.09 MANUAL REFRIGERANT SHUT-OFF VALVE

A. Ball valves designed for refrigeration service and full line size.

B. Valve shall have cap seals.

C. Valves with hand wheels are not acceptable.

D. Provide service valve on each liquid and suction line at compressor.

E. If service valves come as integral part of condensing unit, additional service valves shall not be required.

F. Approved Manufacturers:

1. CoBraCo (Apollo)

2. Henry

3. Mueller

4. Superior

5. Virginia

2.10 FLEXIBLE CONNECTORS

A. Provide each liquid line and suction line at both condensing unit and evaporator on systems larger than five tons.

B. Anchor pipe near each flexible connector.

C. Connectors shall be for refrigerant service with bronze seamless corrugated hose and bronze braiding.

D. Approved Manufacturers:

1. Anaconda "Vibration Eliminators" by Anamet

2. Vibration Absorber Model VAF by Packless Industries

3. Vibration Absorbers by Superior Valve Co.

4. Style "BF" Spring-flex refrigerant connectors by Vibration Mountings.

PART 3 - EXECUTION

3.1 INSTALLATION

A. Slope suction lines down toward compressor or one inch/10 feet. Locate traps at vertical rises against flow in suction lines.

B. Refrigeration system connections shall be copper-to-copper, copper-to-brass, or copper-to-steel type properly cleaned and brazed with specified rods. Use flux only where necessary.

1. No soft solder (tin, lead, antimony) connections will be allowed in system.

2. Braze valve, sight glass, and flexible connections.

3. Circulate dry nitrogen through tubes being brazed to eliminate formation of copper oxide during brazing operation.

C. Insulate all suction and hot gas lines. Insulate liquid lines where pipe may be in close contact to humans.

3.2 FIELD QUALITY CONTROL

A. Make evacuation and leak tests in presence of Architect's Engineer after completing refrigeration piping system. Positive pressure test will not suffice for procedure outlined below:

1. Draw vacuum on each entire system with vacuum pump to 200 microns using vacuum gauge calibrated in microns. Do not use cooling compressor to evacuate system nor operate it while system is under high vacuum. Isolate compressor from system piping using shut-off valves prior to pulling vacuum.

2. Break vacuum with refrigerant to be used and re-establish vacuum test. Vacuum shall hold for 24 hours at 200 microns without compressor running.

3. Conduct test at 70°F ambient temperature minimum.

4. Do not use systems until tests have been made and systems started up as specified. Inform Owner's Representative of status of systems at time of final inspection and schedule start-up and testing if prevented by outdoor conditions before this time.

5. After testing, fully charge system with refrigerant and conduct test with Halide Leak Detector.

6. Install valves and specialties in accessible locations. Install refrigeration distributors and suction outlets at same end of coil

END OF SECTION

SECTION 233113

AIR DISTRIBUTION

PART 1 - GENERAL

1.01 APPLICABLE REQUIREMENTS

A. All work to be furnished and installed under this Section shall comply with all the requirements of General Conditions, Supplemental Conditions, Division 01 - General Requirements, Section 230500 - Basic Materials and Methods, and other Sections in Division 23 specified herein.

1.02 SCOPE

A. All work to be furnished and installed under this Section shall comply with all the requirements of Division 01, and shall include, but not necessarily be limited to, the following:

1. Ductwork – Rigid and Flexible
2. Chimneys, Stacks and Flue Vents
3. Ductwork Specialties
4. Flexible Connections
5. Sealants, Adhesives and Tapes
6. Flashings
7. Bird Screens
8. Duct Access Panels and Doors
9. Backdraft Dampers
10. Louvers
11. Diffusers, Grilles, and Registers
12. Fire and Smoke Dampers
13. Elevator Shaft Vents

1.03 RELATED WORK SPECIFIED ELSEWHERE

A. Section 230500: Basic Materials and Methods

B. Section 230593: Testing, Adjusting and Balancing

C. Section 230700: Mechanical Insulation

D. Division 26: Electrical

1.04 QUALITY ASSURANCE

A. Codes and Standards: Provide products conforming to the requirements of the following:

1. ARI 885-98 “Procedure for Estimating Occupied Space Sound Levels in the Application of Air Terminal and Air Outlets.”

2. AMCA-210 - Laboratory Methods of Testing Fans for Rating Purposes.

3. ANSI S1.23 - Designation of Sound Power Emitted by Machinery and Equipment.

4. ASC-A7001 - Standard for Duct Sealants.

5. ASTM A167 - Standard Specification for Stainless and Heat-Resisting Chromium-Nickel Steel Plate, Sheet, and Strip. Type 304 or 304 stainless steel.

6. ASTM A525 - Standard Specification for General Requirements for Steel Sheet, Zinc-Coated (Galvanized) Hot-Dip Process. G90 zinc-coated.

7. ASTM A527/A527M - Standard Specification for Sheet, Zinc-Coated (Galvanized) by the Hot-Dip Process, Lock-Forming Quality.

8. TIMA AAC-101 - Standard for fiberglass duct liner with erosion proof facing.

9. UL 181 - Factory-Made Air Ducts and Connections, Class 1.

B. Conform to NFPA 90A "Standards for the Installation of Air Conditioning and Ventilating Systems".

C. Provide and construct ductwork systems in conformance with the latest editions of the following documents:

1. SMACNA "HVAC Duct Construction Standards-Metal and Flexible - 20055" (HDCS)

2. ASHRAE Systems and Equipment Handbook "Duct Construction" chapter

3. ASHRAE Fundamentals Handbook "Duct Design" chapter

D. Alternatives: The SMACNA standards and publications referenced in this Section of the specifications establish ductwork construction requirements.

E. All ductwork and equipment shall be seismically supported and braced per the SMACNA “Seismic Restraint Manual: Guidelines for Mechanical Systems”.

F. Flame/Smoke Rating: All materials, including sealants and adhesives, exposed within plenum shall have a flame-spread index of 25 or less, and smoke developed index of 50 or less, as tested by ASTM E84 (NFPA 255) method.

1.05 SUBMITTALS

A. Prior to construction, submit for approval on all materials and equipment:

1. Ductwork - Rigid, Flexible and Fabric

2. Ductwork Specialties

3. Flexible Connections

4. Sealants, Adhesives and Tapes and calculated leakage estimate based on Class 3 (3 cfm/sq.ft). leakage.

5. Flashings

6. Bird Screens

7. Duct Access Panels and Doors

8. Backdraft Dampers

9. Diffusers, Grilles, and Registers

10. Fire and Smoke Dampers

    a. Submit a schedule of selected dampers listing the following information for each damper: Location, nominal size, free area velocity, and pressure drop at free area velocity.

11. SMACNA “HVAC Duct Construction Standards - Metal and Flexible"

B. Certifications: Provide a duct schedule, certified by an officer of the sheet metal fabrication subcontractor, that the ductwork conforms to SMACNA standards, and for each sheet metal system furnished on the project include:

1. System name.

2. Duct material.

3. Duct gauge.

4. SMACNA rectangular reinforcement number.

5. SMACNA intermediate reinforcement number.

6. SMACNA transverse reinforcement number.

7. Rod diameter and type.

8. Sealant type.

9. Attachment method.

10. Duct system design pressure.

C. Construction IAQ Management Plan: Collaborate with the general contractor to submit and implement an IAQ Management Plan for the construction process meeting the requirements of the SMACNA IAQ Guidelines. This plan should address the protection of the ventilation system components during construction and cleanup of contaminated components after construction is complete. SMACNA IAQ Guideline recommends control measures in five areas. The IAQ Management Plan should address how compliance has been achieved in these required five areas as follows:

1. HVAC Protection

a. Shutdown of return side of existing HVAC system in areas effected by heavy construction.
b. Provision of temporary filters if existing or new systems must remain operational during construction.
c. Dampering of supply and returns and sealing of openings in areas subject to construction dust.

2. Source Control

a. How will reduction of contaminants be reduced at the source?
b. What steps will be taken to employ low emitting products and sealants.
c. How will air handling equipment be cycled off when not needed.

3. Pathway Interruption

a. Describe how the construction space will be ventilated as required to dilute contaminants.
b. Describe how occupied spaces adjacent to construction areas will be kept at positive pressure relative to spaces under construction.

4. Housekeeping: Describe how the following housekeeping objectives will be implemented:

a. Reduction of dust generated by work will be suppressed.
b. Maintaining a frequent cleaning frequency for dust and particulates.
c. Remove spills or excess applications of solvent-containing products as soon as possible.
d. Remove accumulated water and keep work areas as dry as possible.
e. Protect insulation materials from exposure to moisture.

5. Scheduling: Describe how overlap of construction activity and ongoing building occupancy activities will be minimized.

D. Field Manual: Submit one copy of the SMACNA "HVAC Duct Construction Standards - Metal and Flexible". Maintain a second copy on the project site.

E. Any ductwork installed without prior approval by the specifier, shall be replaced at the expense of the contractor.

F. The contractor must comply with the enclosed specification in its entirety. If on inspections, the specifier finds changes have been made without prior approval, the contractor will make the applicable changes to comply with this specification, at the contractor’s expense.

G. At the discretion of the specifier, sheet metal gauges, and reinforcing may be checked at various times to verify all duct construction is in compliance.

1.06 DELIVERY, STORAGE, AND HANDLING

A. Deliver products to the site in containers with manufacturer's stamp or label affixed.

B. Store and protect products against dirt, water, chemical, and mechanical damage. Do not install damaged components. Remove damaged products from project site.

PART 2 - PRODUCTS

2.01 DUCTWORK

A. Construct all ducts and plenum of gauges, and with joints, bracing, reinforcing, and other construction details in accordance with the latest construction standards previously listed. Metals shall be manufactured by United States Steel, Kaiser, Rolok or equal.

B. Duct dimensions indicated on drawings are net, inside, clear dimensions. For internally lined ducts, add lining thickness to determine metal duct dimensions.

C. Ducts shall be constructed of material gauges and reinforcement per SMACNA pressurization classifications to meet 150% of the pressure requirements for external static pressure scheduled on drawings for the fans serving each system. Where differences exist between SMACNA and the prevailing building code, the gauge or construction method of the submitted ductwork shall be the more stringent of the two standards. See also Part III Execution for matrix of materials and pressure requirements.

2.02 SHEET METAL MATERIALS

A. General Material Requirements: Comply with SMACNA's "HVAC Duct Construction Standards - Metal and Flexible" for acceptable materials, material thicknesses, and duct construction methods unless otherwise indicated. Sheet metal materials shall be free of pitting, seam marks, roller marks, stains, discolorations, and other imperfections.

B. Galvanized Sheet Steel: Comply with ASTM A 653/A 653M.

a Galvanized Coating Designation: [G60 (Z180)] [G90 (Z275)].
b Finishes for Surfaces Exposed to View: Mill phosphatized.

C. Carbon-Steel Sheets: Comply with ASTM A 1008/A 1008M, with oiled, matte finish for exposed ducts.

D. Stainless-Steel Sheets: Comply with ASTM A 480/A 480M, Type 304 or 316, as indicated in the "Duct Schedule" Article; cold rolled, annealed, sheet. Exposed surface finish shall be No. 2B, No. 2D, No. 3, or No. 4 as indicated in the "Duct Schedule" Article.

E. Aluminum Sheets: Comply with ASTM B 209 (ASTM B 209M) Alloy 3003, H14 temper; with mill finish for concealed ducts, and standard, one-side bright finish for duct surfaces exposed to view.

F. Factory- or Shop-Applied Antimicrobial Coating:

1. Apply to the surface of sheet metal that will form the interior surface of the duct. An untreated clear coating shall be applied to the exterior surface.
2. Antimicrobial compound shall be tested for efficacy by an NRTL and registered by the EPA for use in HVAC systems.
3. Coating containing the antimicrobial compound shall have a hardness of 2H, minimum, when tested according to ASTM D 3363.
4. Surface-Burning Characteristics: Maximum flame-spread index of 25 and maximum smoke-developed index of 50 when tested according to UL 723; certified by an NRTL.
5. Shop-Applied Coating Color: [**Black**] [**White**].

6. Antimicrobial coating on sheet metal is not required for duct containing liner treated with antimicrobial coating.

G. Reinforcement Shapes and Plates: ASTM A 36/A 36M, steel plates, shapes, and bars; black and galvanized.

1. Where black- and galvanized-steel shapes and plates are used to reinforce aluminum ducts, isolate the different metals with butyl rubber, neoprene, or EPDM gasket materials.

H. Tie Rods: Galvanized steel, 1/4-inch (6-mm) minimum diameter for lengths 36 inches (900 mm) or less; 3/8-inch (10-mm) minimum diameter for lengths longer than 36 inches (900 mm).

2.03 DUCTWORK FABRICATION

A. Joints – Sealing

1. Duct tape is not allowed. Rolled elastomeric duct sealants are not allowed.

2. Solvent-based and oil-based sealants are not allowed indoors.

3. Seal all transverse joints - this includes mechanical joints similar to Ductmate on all supply, return, exhaust and outside air intake ducts.

4. All sealant systems for outdoor application to be suitable for use in exposure to water. Vulcum 801 and 351.

5. All sealant systems for indoor application to be meet VOC limits as specified in South Coast Air Quality Management District Rule #1168 limiting VOC's to 100 g/l. Sealants by Hardcast, Ductmate, Mon-Eco Industries, United McGill or equal, as recommended for ductwork application.

6. Water-Based Joint and Seam Sealant: Flexible, adhesive sealant, suitable for high velocity and high pressure applications, UL 181B-M listed, UL 723 classified, and complying with NFPA requirements for Class 1 ducts.

a. Outdoor Application: Not permitted where subject to moisture exposure.
b. Indoor Application: Hardcast Iron Grip, Ductmate PROseal, Mon-Eco EZ Seal 44-44, or equal.

7. Two-Part Tape Sealing System: Woven-fiber tape impregnated with gypsum mineral compound and modified acrylic/silicone activator to react exothermally with tape to form hard, durable airtight seal. Hardcast Two Part II, McGill Uni-Cast, or equal.

B. Joints - Rectangular Ducts

1. Slip drive joints, standard seams, flanges or welding as required by SMACNA HVAC Duct Construction Standards for system static pressure. Ductmate, MEX Industries, or equal are acceptable joint methods, but must be sealed as described previously. Transverse joints shall be constructed per Figure 1-4 for types T-8 through T-25. T-1 and T-5 slip joints are NOT allowed. Joint T-2, T-3, T-6 and T-7 reinforced slip joints are allowed below 2" static pressures.

C. Joints - Round

1. Exposed Ductwork: Slip drive and sheet metal screws.

2. Concealed Ductwork: Sheet metal screws.

D. Elbows

1. Construct long radius elbows with centerline not less than 1.5 times the duct width. Shorter radius elbows may be used where required to fit in restricted spaces, or as shown. Provide single thickness turning vanes on all short rectangular radius elbows less than 25" wide. Provide double thickness turning vanes for short rectangular radius elbows 25" wide and greater. Number of vanes per SMACNA. Elbows with square throat and radius heel are NOT allowed.

E. Transitions

1. Construct transitions with minimum slope of 1 to 5 ratio and in conformance to SMACNA.

F. Branch Connections

1. Provide 45° entry boots or radius taps for rectangular duct take-offs and conical or bellmouth taps for round duct take-offs. Straight 90° taps are not allowed, except where round take-off duct size equals round branch duct size. Provide volume dampers at take-offs for balancing if not specifically noted as provided at outlet or inlet. Provide insulation guards at transitions to lined ductwork.

2.04 RECTANGULAR DUCTWORK

A. Construct rectangular ductwork to meet all functional criteria defined in Section VII, of the SMACNA “HVAC Duct Construction Standards Metal and Flexible” 1995 Edition. This shall be subsequently referred to as the SMACNA Manual. All ductwork must comply with all local, code requirements. Ductwork shall be constructed of galvanized steel. Diagonally cross break all panels on ducts 30 inches wide and larger, or bead using automatic bead machine with beads at 12 inches on center or less. All connections shall utilize 45° boot take-offs. Bullhead tees and straight taps are not permitted. All ductwork shall be stainless steel in, and around, magnetically/electrically sensitive rooms.

2.05 ROUND DUCTWORK

A. Round and oval ductwork shall be constructed to SMACNA round ductwork requirements of galvanized sheet steel. Spiral lock seams, only, to 50" diameter. Larger than 50" may be welded longitudinal or spiral lock seam. Lap or snap lock seams are not permitted for round ductwork of any size. Provide beaded sleeve joints or flanges with gasket joints. Elbows shall be 5-gore mitered and welded. All elbows shall be long radius type with centerline radius to duct diameter of 1.5, exceptions will only be allowed at restricted space locations. All connections shall utilize welded conical tees, aluminum conical fitting with damper by Flexmaster #CBD, or 45° boot take-offs by Flexmaster #STOD. Spin-in type or other types of butt tees, bullhead tees or straight taps are not permitted. Flat oval shall be utilized in space-restricted areas. All ductwork shall be aluminum in and around magnetically/electrically sensitive rooms.

2.06 FLEXIBLE DUCTWORK

A. Flexible one-inch thick insulated round ductwork may be utilized where shown on the Drawings and at the last seven (7’) feet to each air outlet and inlet, unless shown otherwise on the plans. Maximum of only one 90° bend in any length. No intermediate joints are allowed. Connect each end with stainless steel screw operated drawbands. Support duct to maintain smooth shape without

sagging. All connections shall utilize welded conical tees, aluminum conical fitting with damper by Flexmaster #CBD, or 45° boot take-offs by Flexmaster #STOD. Spin-in type or other types of butt tees, bullhead tees or straight taps are not permitted.

B. Flexible ductwork for low pressure systems with positive static pressure at or below 2" w.g. positive pressure shall be a trilaminate of aluminized foil, fiberglass insulation, and aluminized polyester, mechanically locked to galvanized steel helix without adhesives, exterior 1" fiberglass insulation and fire retardant plastic outer jacket. Flexmaster #Type 5B, Thermoflex Model MKE or approved equal.

2.07 ACOUSTICAL DUCT LINER <<<BE CAREFUL WHERE YOU USE DUCT LINER – EDIT ACCORDINGLY>>>

A. Acoustic Duct Lining shall be installed where shown on the drawings and as specified for low velocity supply, return and exhaust ductwork. Liner is to be utilized to line vertical supply duct risers, mechanical shafts conveying return air, terminal box discharge plenums, and other horizontal duct runs where shown on drawings. Dimensions of lined ducts given on the drawings indicate the inside dimensions of duct after the lining has been installed. Black-coated (vinyl, acrylic or neoprene) duct lining shall be adhered by 100% covering of a fire retardant adhesive (3M EC-1128, Benjamin-Foster 85-20, or equal). When width of duct exceeds 12" and also on sides when height exceeds 24", use non-ferrous mechanical fasteners such as welded pins and speed clips, 12" on center maximum lateral spacing and 18" on center maximum longitudinal spacing. Start fastening within 3" of upstream transverse edge of the liner and within 3" of the longitudinal joint. Mechanical fasteners shall not pierce the duct walls. The pins shall be cut off flush, washers shall be used and installation made so that no gaps or loose edges occur in the insulation. Apply a brushcoat of Benjamin-Foster 30-36 to washers, extending onto lining surface a minimum of 2". Top pieces shall be supported by the side pieces. Provide insulated build out frames for attaching dampers at running vanes where required.

B. All transverse and longitudinal abutting edges of duct lining shall be sealed and lapped 3" with a heavy coat of Foster 30-36, in accordance with the manufacturer's recommendations. All exposed edges shall be installed with sheet metal nosings. At all openings in the ductwork there shall be a galvanized metal flange, equal in depth to adjacent lining and having a 1½" lip to hold lining in place. All bolt holes shall be sealed airtight.

C. Internal Duct lining shall be installed in complete accordance with the Sheet Metal and Air-Conditioning Contractors National Association (SMACNA) Duct Lining Application Standard. Mechanical fasteners shall conform to Mechanical Fastener Standard MF-1 from SMACNA. Adhesive shall be water-based and conform to Adhesive and Sealant Council Standards for Adhesives for Duct Liner ASC-A-7001C.

D. Internal Duct Lining shall be 1" unless otherwise called out, matte-faced, 1.5 lb/ft^3 minimum density and shall meet the requirements of NFPA90-A.

E. Acoustical duct liners shall comply with the following requirements and standards:

1. ASTM C 1071, Type 1.

2. NFPA 90A and 90B.

3. Resist fungal growth.

4. Support air velocities up to 5,000 fpm.

5. Per UL 723 test method, flame spread shall not exceed 25, and smoke developed shall not exceed 50.

6. Per test method ASTM C423 using Type A mounting, minimum allowable NRC shall be 0.45.

F. The following are acceptable, subject to the above:

1. Internal Duct Lining:

a. Aeroflex Type 150 from Owens-Corning Fiberglass, Toledo, OH.
b. Linacoustic/Spiracoustic Type 150 from Manville Products Corp., Denver, CO.
c. Ultralite Type 150 from Certain Teed Corp., Valley Forge, PA.
d. Pre-approved equal to above.

2. Mechanical Fasteners:

a. Gemco TYPE IH-A from Goodloe E. Moore, Inc., Danville, IL.
b. Eckoustic-Klip from Eckel Industries, Inc., Cambridge or MA.
c. Pre-approved equal to above.

2.08 PLENUMS AND EQUIPMENT CASINGS

A. Construct casings and plenums in conformance with SMACNA.

B. Minimum Pressure Class: Unless otherwise indicated construct plenums and casings to withstand either a negative or positive static pressure of 4" W.G.

C. Single-Wall: Provide single-wall, casings and plenums where indicated on the drawings.

1. Construct in accordance with SMACNA Standards.

2. Use steel-angle-reinforced standing-seam construction.

3. Locate intermediate bracing angles bolted to the casing 24 inches on centers.

4. Construct for static pressure indicated or for the maximum fan static pressure whichever is less.

5. Bolt to 3" high concrete pads using 1½" x 1½" x ¼" thick galvanized steel structural sections.

D. Double-Wall: Provide where indicated on the drawings, constructed as follows:

1. Provide 4" thick prefabricated double wall insulated metal panel assemblies, with 16MS gauge aluminum or 18 gauge minimum galvanized steel outer sheets.

2. Provide 22 gauge Type 304 stainless steel inner sheets.

3. Casings shall be fully metal enclosed, insulated with 4" thick rigid fiberglass insulation and conforming to NFPA 90A, with maximum flame spread of 25 and maximum smoke developed of 50.

4. Field or factory fabricate to size and configuration indicated on the drawings, using field verified dimensions.

5. Provide coordinated shop drawings.

6. Reinforce spans 10' or greater with structural steel sections to yield maximum deflection ¼" at minus 10" or plus 10" W.G. static pressure.

7. Provide openings and doors, all factory framed, and reinforced with 304 stainless steel structural sections.

8. Construct doors of same material as casings, of sizes and locations indicated on the drawings but not smaller than 18" by 54", and conforming to SMACNA.

9. Provide doors, hinges and hardware factory fabricated and mounted.

10. Door swings shall open against air pressure, with door latches operable from either side.

11. Provide door seals with neoprene gaskets, which have an airtight seal.

12. Provide each door with a 10" by 10" wire reinforced double pane window.

13. Bolt base channel to 3" high concrete pads.

2.09 DUCTWORK SPECIALTIES

A. General: Where specifically called for, materials for use in fabricating ductwork specialties shall be identical to that used to fabricate ductwork. See drawings and Part 3, Execution for schedule.

B. Volume and Splitter Dampers: Galvanized sheet metal blade and frame with Ventfabrics Inc., Ventlok operating hardware. For accessible dampers, provide #641 self -locking dial regulators and #644 self-locking dial regulators for insulated ductwork, #637 square end bearing, and #635 spring end bearing, as applicable. For inaccessible dampers, provide #666 or #677 concealed locking damper regulator with bearings as above. For static pressures above 3" W.G., provide #640 HiVel dial regulator and #609 HiVel end bearing for accessible dampers. Regulators shall extend to and through ceiling with neatly installed hardware at the finished ceiling. For inaccessible dampers requiring adjustment through diffusers use Young Regulator, Bowden cable control system.

C. Multi-louver Volume Dampers: 16 gauge galvanized steel frame. Opposed, 6" wide, 16 gauge galvanized steel blades. Concealed linkage in frame. Ruskin #CD35/OBD or equal.

D. Flexible Connections: Provide flexible connectors at the discharge and inlet of fans, air handlers, rotating mechanical equipment, and where shown on the Drawings for proper vibration isolation. Neoprene impregnated glass cloth with 24 gauge galvanized metal frame. Neoprene-only connectors are <u>not</u> allowed. Minimum dimensions - 3" metal, 3" fabric, 3" metal. Ventfabrics #Ventglas or approved equal by Duro Dyne, Q Industries, consolidated Kinetics, Ductmate Proflex or Elgen.

E. Ducts through roof shall be 16 gauge (or minimum of 2 gauges heavier than attaching ductwork), flashed and counterflashed, and provided with storm collars to secure a watertight construction.

F. Bird Screens: 14 gauge, ½", galvanized wire mesh, set in a galvanized steel frame, screw set.

2.10 DUCT ACCESS PANELS AND DOORS

A. In sheet metal work, hollow core double construction of same or heavier gauge material as duct in which installed. Use no door smaller than 12" by 12" for simple manual access or smaller than 24" by 24" where personnel must pass through infrequently. Use 24" by 60" minimum for filters and more frequent maintenance. Use Ventlok or approved hinges and latches on all doors; 100 Series hinges and latches on low pressure system doors up to 18 " maximum dimension, 200 Series on

larger low pressure system doors and 333 Series on high pressure systems. Construct doors up to 18 " maximum dimension with one inch overlap fit and gasket with ¾" by ⅛" sponge rubber, fit larger doors against 1½" by ⅛" flat stock or angle frame and gasket with ¾" by ⅛" sponge rubber or felt. Door swing to be opposite airflow. CESCO, Vent Products, Air Balance, Ductmate Sandwich or equal. Access doors smaller than 12" x 12" can be used for visual inspection of dampers, etc. on small ductwork less than 12" wide but must be of maximum size that will fit on duct with 6" x 6" as minimum size. All access doors smaller than 12" x 12" must be approved by Engineer for the specific application prior to ordering.

2.11 BACKDRAFT DAMPERS

A. Damper Types:

1. Heavy Duty Backdraft Dampers: Provide counterweight type complete with frame, end bearings, counterbalance assembly, blades, and linkage. Pressure drop to be no more than 0.24”w.g. at 1000 fpm. Install at outside air intakes, exhaust outlets, and where shown on Drawings. Pacific Air Products #PRD-100AL, Ruskin #CBD2, NCA, or equal by Swartout, American Warming or Vent Products.

2. Nonmetallic Backdraft Damper: Provide complete with 16ga frame, neoprene coated fiberglass blades, galvanized expanded metal grill. Ruskin NMS2.

B. Application Requirements:

1. Generator Discharge Damper: Heavy Duty Backdraft Damper. Size at no more than 1000 fpm velocity.

2. Outside Air Intakes except where a control damper is required – Heavy Duty Backdraft Damper.

2.12 LOUVERS

A. Louvers are generally to be provided under Division 10. Where louvers are not covered on architectural plans and specifications, contractor is to provide under the following specification:

1. Louvers to be 6" deep, 35° drainable fixed blade design, constructed of galvanized steel or extruded aluminum, or as specified on the plans.

2. Frames to be constructed of 6" deep channel.

3. Provide with ½" x ½" galvanized mesh birdscreen mounted on backside of louver.

4. Finish/color per architect/engineer's review.

5. Manufacturer: American Warming, Industrial Louver, Vent Products, NCA, Swartout, Ruskin ELF6375DX Louvers & Dampers or equal.

2.13 DIFFUSERS, GRILLES AND REGISTERS

A. All diffusers, grilles, and registers shall be selected to provide proper air distribution for the intended occupant application. All supply air devices shall be selected to provide a maximum air velocity of 50 fpm at three feet above the floor, unless otherwise noted. Manufacturer's representative shall carefully review Architectural and Mechanical drawings and ensure diffuser/grille/register selections will provide proper air distribution at NC 25 or less. Manufacturer at no additional expense to the

Owner shall replace diffusers, grilles, and registers not providing proper distribution or excessive noise at scheduled airflow.

B. All frames shall be selected to fit the ceiling type. Verify with Architectural Drawing. Each diffuser, grille and register shall be individually capable of balancing via duct mounted balancing dampers or attached opposed blade dampers. Provide unit opposed blade damper where individual duct mounted balancing dampers are not provided.

C. Sizes, capacities and patterns shall be as shown on the Drawings. Manufacturer: Metal Aire, Titus, Krueger, Anemostat, Carnes, Price or Tuttle&Bailey.

2.14 DUCT SMOKE DETECTORS (DSD)

A. Duct mounted photoelectric smoke detector. One required for each heating or cooling system supplying air in excess of 2,000 cfm, for systems serving more than one occupancy type, and for control of each combination fire/smoke damper when not controlled by Div. 26 area wide detection system. Coordinate with Div 16. work and electrical installer for power to smoke detector. Detector shall be mounted in the supply air ductwork downstream of the air handler and filters, or upstream of combination dampers. Coordinate with control installer to assure that detector shall shut down the air-moving equipment when smoke is detected and close associated damper actuator(s). Sensor shall be selected to operate with air velocity rating from 100 to 4000 fpm. Provide with metal sampling tube. Provide remote test and reset station at ceiling or as otherwise indicated. Duct smoke detector shall be installed in compliance with the applicable mechanical or building code. Coordinate with Section 230900 and 230593 work. System Sensor #D2 series or approved equal.

B. Additional requirements for duct smoke detectors include requirements per Section 6.4 of NFPA-90A. Provide one duct smoke detector at each story to the connection to a common return and prior to any recirculation or fresh air inlet connection in air return systems having a capacity greater than 15,000 cfm and serving more than one story.

2.15 FIRE DAMPERS

A. General:

1. Provide UL labeled 3 hour rated fire dampers at 3-hour and greater penetrations.

2. Provide UL labeled 1-½ hour rated fire dampers at less than 3-hour penetrations.

3. All dampers to be certified under the latest UL Standard. Certification based on former non-current standards is unacceptable.

4. All damper installations to conform with NFPA 90A and manufacturer's installation instructions. Details on plans are shown for reference only.

5. Install in ducts passing through floors, walls, and ceilings as required by code. Refer to Architectural and Mechanical plans for damper locations.

6. Provide fire and fire/smoke dampers in locations as required by chapter 7 of the IBC.

7. Provide sleeves, slip joints, retaining angles, duct access doors, ceiling access panels, etc., as required to check and service the fire dampers. Slip or break away joints are not allowed to be taped or sealed. Access doors shall be tight fitting hinged or sliding and shall have 1" high label reading "FIRE DAMPER” or “FIRE/SMOKE DAMPER”.

8. All dampers to be designed for use in dynamic systems.

9. Dampers shall be rated for Leakage Class I. Leakage Class II may be used if damper size is smaller than available Leakage Class I dampers.

10. Dampers shall have an installed pressure drop of no more than 0.10”w.g. at the free area velocity. See submittal requirements above.

11. Dampers shall be installed straight and true, level in all planes, and square in all dimensions. Dampers shall move freely without undue stress doe to twisting, racking, bowing, or other installation error. Do not install actuators in area where moisture can penetrate actuator or where temperature exceeds 120°F.

12. Sizing: All fire dampers shall be sized to provide equivalent free area through the damper equal to the connecting ductwork. In no case are dampers’ pressure drops to exceed those stated below. See also submittal requirements in Part One of this section.

B. Radiation Ceiling Fire Dampers: Bladed ceiling fire damper constructed and tested in conformance with UL-555 (dynamic rating). Fire damper shall have a 165°F fusible link. Installation shall be in accordance with damper manufacturer's instructions. Provide fire blanket where required to obtain listed fire rating. Ruskin #CFD Series, Pottorff #CFD-15 Series or approved equal by CESCO, Air Balance, or Greenheck.

C. Combination Fire/Smoke Dampers:

1. General Requirements:

a. Install at rated corridor wall or ceiling penetrations, occupancy separation walls, area separation walls and where shown on plans. Low leakage fire/smoke damper (Leakage Class 1 unless otherwise stated below) with electric actuator. Fire damper shall be equipped for vertical wall penetrations with manufacturer supplied sleeve and fail closed on loss of power. Each damper shall be equipped with a controlled 15 second electric heat-actuated release device. This device is to be equipped with a push-button reset. No manual fusible links are permitted. Manufacturer shall provide factory assembled sleeve of 16" minimum length. Installation shall be in accordance with damper manufacturer's instructions. Coordinate power and smoke detector connections with electrical installer. Integral smoke detection and actuating devices may be used if listed and approved for such service. Comply with IBC. All combination smoke and fire dampers shall automatically reset from closed to open position upon the reapplication of power to actuators.

b. Actuators: All gear and housing shall be steel. The actuator shall be direct coupled and employ a steel toothed cold-weld clamp for connecting to damper shafts. Aluminum clamps or set-screw attachments are not acceptable. Actuator shall be UL listed and manufactured under ISO 9001 quality control.

D. Actuator shall carry a manufacturer’s 5-year warranty.

1. Actuator shall have microprocessor based motor controller providing electronic cut off at full open so that no noise can be generated while holding open. Holding noise level shall be inaudible. Actuator shall be incapable of burning out if stalled before full rotation is reached.

2. Dampers shall be installed straight and true, level in all planes, and square in all dimensions. Dampers shall move freely without undue stress due to twisting, racking, bowing, or other installation error.

3. Actuator shall have UL555S Listing by the damper manufacturer for 350°F and be rated for 20,000 cycles minimum. Actuator shall draw no more than 0.23A at 120V running, or 0.1A holding at 120V (27 VA and 10 VA respectively for 24V power) for 70 in-lb torque.

4. Stall and instantaneous type actuators are not acceptable.

5. Do not install in area where moisture can penetrate damper or actuator nor where actuator temperature exceeds 120°F.

6. All smoke and combination fire and smoke dampers shall be provided with Belimo Aircontrols FSNF120 (-S), FSNF24 (-S) actuators, or approved equal.

7. If a Honeywell ML-4115 actuator is submitted as an alternate, it must be provided with a time delay relay to cause the actuator to reset to drive open mode on momentary loss of power for less than 3 seconds.

8. Dampers for Low Velocity Applications (2000 fpm or below):

    a. Fire damper shall have 6" wide galvanized steel blades with silicone rubber edge seals.
    b. Pressure drop of a typical 24” x 24” size damper shall be no more than 0.05” w.g. at 1000 fpm velocity.
    c. Basis of Selection: Ruskin #FSD-37, Ruskin #FSD-60, Ruskin #FSD60FA, Pottorff #FSD-140 Series, Pottorff #FSD-150 Series, or approved equal by Greenheck, CESCO or Air Balance.

9. Dampers for High Velocity Applications (2001 fpm or above):

    a. Identical to above except, fire damper shall have 6" wide galvanized steel airfoil blades with silicone rubber edge seals.
    b. Pressure drop at 2000 fpm velocity to be no more than 0.08”w.g. for a 24” x 24”size.
    c. Basis of selection to be Ruskin FSD 60 with airfoil blade, Pottorff FSD-151, or approved equal air foil damper by Greenheck, CESCO or Air Balance.

10. Dampers for Ceiling Application:

    a. Where indicated on plans install at rated corridor ceiling penetrations.
    b. Integral smoke detection and actuating devices may be used if listed and approved for such service.
    c. Basis of Selection: Ruskin #FSD36-C, Pottorff #FSD-172, CESCO CFSD-21, Greenheck CFSD, or approved equal by Air Balance.

11. Required Options:

    a. Provide open or closed indicator option assembly consisting of a single pole and a double throw switch used to indicate damper blade position. Output from switch to position indicator light (LED, provided by Division 26) is by automatic temperature control contractor. Include switch mounting bracket, crank arm, blade bracket and linkage from blade to the switch.
    b. Provide a test module to permit test cycling of the damper/actuator in the field
    c. Provide integral smoke detector OR
    d. Provide and field install smoke detector. Electrical installer shall wire.
    e. For exposed wall applications provide matching wall grille to maintain appearance and fire rating.

f. Temperature limited override: Provide a two temperature electronic high temperature limit. A primary sensor at 165°F can be bypassed by an external electrical signal allowing the damper to reopen and remain open until the temperature reaches the setting of the secondary sensor at 350°F at which point the damper is closed and remains closed. Both sensors are to be equipped with manual resets.

2.16 ELEVATOR SHAFT VENTS

A. Furnish and install elevator shaft vents at top of each elevator shaft over 25' high as required by code. (IBC).

B. Vents to be sized with throat area equal to 3.5% of elevator shaft hoist way area with minimum size of 3 sq. ft.

C. Vents to be Greenheck model "GRS" with bird screen and prefab curb or Loren Cook Company or the equivalent. Minimum size to meet 3 square feet requirement is size GRS-24 (3.24SF Throat will handle 92SF shaft). Upsize as required.

D. Locate to miss beams and coordinate size and location of roof opening with structural.

PART 3 - EXECUTION

3.01 DUCTWORK MATERIAL APPLICATION SCHEDULE

A. Fabricate ducts with galvanized sheet steel except as otherwise indicated and as follows:

1. Non-toxic and non-hazardous wet vapor exhaust, such as dishwasher, sterilizer cart wash, and shower exhaust systems:

   a. Material: Type 316L stainless steel, minimum 24 gage spiral or sheet metal ductwork. Type 316 stainless steel fittings.
   b. Joints: welded, or swaged lap-joint with silicon caulk and stainless steel sheet metal screws.
   c. All accessories shall be stainless steel including dampers, damper hardware and turning vanes.

2. Shower Rooms: Ductwork serving shower rooms or other wet areas shall be constructed similar to ductwork serving dishwashers as noted above or may be fabricated of aluminum ductwork. Where shower room exhaust ducts connect to a general exhaust riser, the non-ferrous ductwork with sealed joints need only extend to point of connection to the general exhaust riser.
3. Environmental exhaust ductwork serving domestic clothes dryers shall be constructed of metal and shall have smooth interior surface. Provide backdraft damper at discharge to atmosphere.

4. All duct system appurtenances are to be the same material as ductwork including volume dampers and access panels.

3.02 DUCTWORK AND SPECIALTIES INSTALLATION

A. Ductwork is generally diagrammatically indicated and shall be generally installed as indicated. Do not scale Drawings for exact location of ducts. Install ducts to best suit field conditions and

cooperate with other trades. Do not penetrate Structural members without consent of Architect or Structural Engineer. Check with Structural drawings prior to locating any penetrations. Duct sizes are indicated as net inside dimensions on the Drawings. The indicated dimensions shall be altered at the job site for the purpose of avoiding interferences and clearance difficulties to other dimensions producing the same air handling characteristics, provided such altered dimensions are approved by the Architect. Ducts shall be constructed in accordance with the latest edition of codes and standards identified in Part 1 and as shown on the Drawings.

1. Clean and pretreat surfaces before application of sealant. Conform to the manufacturer's cleaning procedures. Install sealants in conformance with manufacturer's instructions.

2. Vertical ducts or horizontal ductwork penetrating fire rated ceilings, roofs, walls and floors shall be fire separated with UL listed and labeled fire dampers. Provide additional fire dampers indicated on the Drawings and as otherwise required by the IBC and building inspector. Provide approved firestopping between damper frames and firewalls. Install fire dampers in accordance with NFPA Standards, requirements of the State Fire Marshal, and applicable codes. Ensure that fire dampers are installed in the open position.

3. Provide 16 gauge metal sleeve with 1" clearance and pack space around ducts through walls tight with fiberglass, and seal with Schuller Duxseal or approved 3M fire proof caulking, as required. For exposed ducts through walls, provide flat, sheet metal escutcheon to conceal fiberglass and wall opening.

4. Grilles, Registers and Diffusers: Install flush, squared, tightly sealed, and entirely covering sheet metal ductwork and gaskets. Thread sheet metal mounting screws tightly into sheet metal. All frames shall be selected to fit the ceiling type. Verify with Architectural Drawing. Each diffuser, grille and register shall be individually capable of balancing via duct mounted balancing dampers or attached opposed blade dampers. Provide unit opposed blade damper only where individual duct mounted balancing dampers are specifically noted as not provided. Duct connections shall fit securely to necks or collars behind face area. Provide all necessary transition pieces and duct collars to make connections from ductwork to neck sizes. Where ducts connect directly to necks or collars provide a minimum straight duct section of two times the duct diameter to the last elbow. Where minimum straight duct sections are not physically possible provide sheet metal plenum sized for approximately 500 fpm air velocity with duct tapped directly to side of plenum. Where building walls, floors and ceilings form portions of duct or plenum, provide gasketed angles or channels at junction points, securely bolted and sealed to building structure.

5. Install turning vanes in all mitered elbows in all ducts, so that tips are parallel with the sides of the ducts. Vanes shall be single thickness type. Tips of acoustical turning vanes on outside radius shall be flush with acoustical lining.

6. Provide flexible connections to completely isolate fans from direct contact with all sheet metal work.

7. Provide access panels or doors, as required, for access to valves, controllers, fire dampers and humidifier dispersion tubes. Access doors required in Product Conveying Vapor/Moisture Ductwork (see applicable paragraph above) shall not be installed in the bottom of the duct or in a manner to allow leaks.

8. Volume Dampers: Provide manual volume dampers in all low pressure supply, return and exhaust branch ductwork to grilles, diffusers, inlet and outlet openings to facilitate balancing of systems. These are to be provided as part of contract whether shown on plans or not. Where ceilings are not accessible, provide access door or remote damper operator.

9. Splitters and splitter dampers shall not be installed in medium or low pressure supply ductwork to VAV systems.

B. Hangers and Supports: Securely fasten all ductwork to the building construction by means of hangers, supports, guides, anchors, and sway braces to maintain duct alignment, to prevent sagging, and to prevent noise and excessive strain on ductwork due to movement under operating conditions.

1. Maximum spacing between hangers shall not exceed eight (8) feet.

2. Adequately mount and anchor all material and equipment as required. Include lateral bracing as required to prevent horizontal, seismic movement. Refer to IBC and architectural Drawings for seismic requirements.

3. Do not support ductwork from fans or any other pieces of equipment.

4. Powder driver fasteners shall not be used to support rectangular ducts of 40" maximum dimension. Powder driven fasteners shall not be allowed in existing facilities where electronic equipment is located.

5. Support round duct, 30" and larger, with two hangers at each support point.

6. Hangers and supports shall conform to SMACNA section "Hangers and Supports". Nail inserts, hangers and supports to formwork before slabs are poured. Cut off or remove nails, strap-ends and other projections, flush with concrete after forms are removed.

7. Support vertical ducts, passing through floors with two continuous angles screwed to the duct and bearing to the floor and conforming to SMACNA section "Riser Support-From Floor". Blocking or shimming ducts will not be permitted.

C. Other:

1. Fans: Align fans, motors, and drives. Install fans to render bearings accessible for lubrication without dismantling fans or ducts. Provide extended bearing oilers as required. Mount all fans on vibration isolators as specified.

2. Insulation: Properly and neatly apply insulation on all material and equipment and apparatus, as specified, including all fittings. Apply insulation over clean, dry surfaces, with adjoining sections firmly butted together and canvas smoothly pasted over. When vapor barriers are specified, install continuous overall external surfaces of the entire system.

3. Duct Sizing: Where duct sizes are not specifically shown on the plans or must be modified due to physical limitations, supply ducts may be sized at a maximum velocity of 1,500 fpm or 0.08" sp friction per 100 feet, whichever provides the larger duct, and return/exhaust/intake ducts may be sized at a maximum velocity of 1,000 fpm or 0.06" sp friction per 100 feet, whichever provides the larger duct.

3.03 STAINLESS STEEL DUCTWORK

A. For installations serving moisture, vapor, or fume exhaust.

1. For connections to hoods or equipment provide minimum 12” length flanged and bolted stainless steel spool piece connection.

2. All fittings shall be long radius. Round elbows shall be minimum 5 gore.

3. Slope horizontal ductwork back toward source connected equipment minimum 1% slope so that moisture and liquids may drain back toward equipment.

4. Low point "traps" in the ductwork shall be fitted with a low point drain valve, ½" welded connection, stainless steel piping and valve.

5. All welding to be completed by certified welders experienced in 316 grade stainless.

3.04 CONSTRUCTION AND SEALING CRITERIA

A. 233113 – Unless called out otherwise on drawings the pressure classification of ductwork shall be as follows:

Duct system:	**Location**	**Working pressure**	**Build to SMACNA pressure class**	**Build to SMACNA seal class:**
Outdoor air intake	From ambient intake to AHU	-1" wc	-2" wc	B
Low press Supply Air	From AHU to grilles, registers or diffusers.	low pressure	+1" wc	B
Low press Return air	From return grilles to AHU	Low pressure	-1" wc	B
Transfer air	From grille to grille, or acoustic boots or "z" bends	Low pressure	+0.5" wc	C
Relief air	From AHU to discharge at ambient	+1" wc	+2" wc	B
General exhaust	From grille to exhaust fan	-1" wc	-2" wc	B
General exhaust	From exhaust fan to discharge at ambient	+1" wc	+2" wc	B
Washroom exhaust	From grille to exhaust fan	-1" wc	-2" wc	B
Washroom exhaust	From exhaust fan to discharge at ambient	+1" wc	+2" wc	B

B. 233113 – The default leakage classification of ductwork is as follows:

Duct working press. class:	**Low pressure - +/- 0.5"wc**	**+/-1" – +/-3"**	**+/-4" – +/-10" wc**
SMACNA Seal Class	C	B	A
Sealing Applicable	Transverse joints only	Transverse and longitudinal Joints	Joints, seams, and all wall penetrations
Rectangular sheet metal SMACNA Leakage Class	24	12	6
Round sheet metal SMACNA Leakage Class	12	6	3

3.05 MANDATORY CALIFORNIA DUCTWORK TESTING

A. All duct systems shall be sealed to a leakage rate not to exceed 6% of the fan flow if the duct systems are:

1. Connected to a constant volume, single zone system, air conditioners, heat pumps or furnaces, and

2. Serve less than 5,000 square feet of floor area, and

3. Have more than 25% duct surface area located in one or more of the following places:

   a. Outdoors, or
   b. In a space directly under a floor where the U-factor of the roof is greater than the U-factor of the ceiling, or
   c. In a space directly under a roof with fixed vents or openings to the outside or unconditioned spaces, or
   d. In an unconditioned crawlspace, or
   e. In other unconditioned spaces.

4. The leakage rate shall be confirmed through field verification and diagnostic testing in accordance with procedures set forth in the Nonresidential ACM Manual.

3.06 COMBINATION FIRE, SMOKE DAMPER INSTALLATION

A. Install per manufacturer’s and UL installation requirements.

B. Interlock operation of all fire smoke dampers to close dampers when the fans associated with the dampers are shut down. This also includes dampers in transfer ducts associated with system fans.

3.07 SEISMIC REQUIREMENTS

A. See Section 230548 for specific requirements.

B. All HVAC equipment and machinery shall be anchored to withstand forces generated by earthquake motions. As a minimum, equipment and equipment frames shall be designed to withstand a force of 100% of the weight of the equipment and frame acting at its center of gravity. Anchorage of the equipment and/or frame to the structure shall be for a force of four times gravity also acting at the center of gravity.

C. The seismic calculations shall be the responsibility of contractor.

3.08 EQUIPMENT

A. Install equipment as shown on plans and in accordance with manufacturer's installation recommendations.

3.09 SUPPLY DIFFUSER AND REGISTER LOCATIONS

A. Coordinate location of supply outlets with ceiling mounted smoke detectors. Locate outlets or outlet distribution so as to prevent airflow from inhibiting the operation of smoke detectors. Locate ceiling outlets a minimum of 3'-0" from smoke detectors.

3.10 PAINTING

A. Where the interior surfaces of ductwork are visible through the blades of supply outlets, return inlets, and exhaust inlets - paint the interior visible surfaces with one coat of flat black paint.

3.11 FIELD QUALITY CONTROL

A. Do not insulate or conceal ductwork before inspection by Owner's Representative, Architect or Engineer. If ductwork is insulated and concealed prior this inspection the Contractor shall remove insulation and ceiling to permit inspection at no additional cost to the Owner. The Contractor shall replace the insulation and ceiling after final inspection at no additional cost to the Owner.

B. Ductwork Deflection Criteria:

1. Maximum inward and/or outward deflection at sheetmetal panels shall be ¾" under maximum static pressure operating conditions. Additional intermediate stiffening angles shall be installed where deflections exceed ¾".

2. Maximum inward and/or outward deflection at sheetmetal elbows and joints shall be ¼" under maximum static pressure operating conditions. Additional stiffening angles shall be installed where deflections exceed ¼".

C. Acceptance of duct systems shall be contingent upon conformance with the requirements specified in Section 230593 "Testing, Adjusting and Balancing".

3.12 ADJUSTING AND CLEANING

A. Clean the inside of plenums, casings, enclosures, fans, and accessible ductwork before starting fans. Blowout coils and condensate piping with compressed air. Install a clean set of filters in each system prior to testing and balancing. Proceed with testing and balancing. All dampers shall be locked in place.

END OF SECTION

SECTION 237413

PACKAGED HVAC UNITS

PART 1 - GENERAL

1.01 APPLICABLE REQUIREMENTS

A. All work to be furnished and installed under this section shall comply with all the requirements of General Conditions, Supplemental Conditions, Division 01 - General Requirements, Section 230500 - Basic Materials and Methods, and other Sections in Division 23 specified herein.

1.02 SCOPE

A. All work to be furnished and installed under this Section shall comply with all the requirements of Division 01, and shall include, but not necessarily be limited to, the following:

1. Packaged unit.
2. Controls and control connections.
3. Electrical power connections.
4. Roof mounting frame and base.

1.03 RELATED WORK SPECIFIED ELSEWHERE

A. Section 230500: Basic Materials and Methods

B. Section 230593: Testing, Adjusting and Balancing

C. Section 230700: Mechanical Insulation

D. Section 230900: Controls and Instrumentation

E. Section 233113: Air Distribution

F. Division 26: Electrical

1.04 QUALITY ASSURANCE

A. Manufacturer's Qualifications: Provide packaged units that are the standard product of an equipment manufacturer regularly engaged in the production of such units who issues complete catalog information on such products. Units shall not be fabricated by the Contractor.

B. Codes and Standards: Provide air handling units conforming to the requirements of the latest addition of the following:

1. Air Movement and Control Association (AMCA):

a. 99 Standards Handbook
b. 210 Laboratory Methods of Testing Fans for Rating [Unit shall bear AMCA Certified Rating Seal]
c. 300 Reverberant Room Method for Sound Testing of Fans [Unit shall bear AMCA Certified Rating Seal]
d. 301 Methods for Calculating Fan Sound Ratings from Laboratory Test Data
e. 500 Test Method for Louvers, Dampers, and Shutters

2. American National Standards Institute (ANSI):
   a. 9 Load Ratings and Fatigue Life for Ball Bearings
   b. 11 Load Ratings and Fatigue Life for Roller Bearings
   c. 900 Test Performance of Air Filter Units

3. Air-Conditioning and Refrigeration Institute (ARI):
   a. 210 Unitary Air Conditioning Equipment
   b. 270 Sound Rating of Outdoor Unitary Equipment

4. American Society of Heating, Refrigerating and Air-Conditioning Engineers (ASHRAE):
   a. 15 Safety Code for Mechanical Refrigeration

5. National Electrical Manufacturers Association (NEMA): Except for motors, provide electrical components required as part of air handling units, which comply with NEMA Standards.

6. National Fire Protection Association (NFPA): Provide unit internal insulation having flame spread rating not higher than 25 and smoke developed rating not higher than 50:
   a. 70 National electrical Code
   b. 90A Standard for the Installation of Air Conditioning and Ventilating Systems
   c. 90B Standard for the Installation of Warm Air Heating and Air Conditioning Systems

7. Sheet Metal and Air Conditioning Contractors' National Association, Inc. (SMACNA): Comply with applicable SMACNA standards including "HVAC Duct Construction Standards - Metal and Flexible."

8. Underwriters Laboratories, Inc. (UL): Except for motors, provide electrical components required as part of units, which have been listed and labeled by UL.

1.05 PRODUCT SUBSTITUTIONS

A. The Contractor shall certify the following items are correct when using substituted products other than those scheduled or shown on the drawings as a basis of design:

   1. The proposed substitution does not affect dimensions shown on drawings.

   2. The Contractor shall pay for changes to building design, including engineering design, detailing, structural supports, and construction costs caused by proposed substitution.

   3. The proposed substitution has no adverse effect on other trades, construction schedule, or specified warranty requirements.

   4. Maintenance and service parts available locally are readily obtainable for the proposed substitute.

B. The Contractor further certifies function, appearance, and quality of proposed substitution are equivalent or superior to specified item.

C. The Contractor agrees that the terms and conditions for the substituted product that are found in the contract documents apply to this proposed substitution.

1.06 SUBMITTALS

A. Product Data: Submit manufacturer's technical product data for packaged units showing dimensions, weights, capacities, ratings, fan performance with operating point clearly indicated, motor electrical characteristics, finishes of materials, installation instructions, sound and vibration test report, and bearing life calculations.

B. Maintenance Data: Submit maintenance instructions, including instructions for lubrication, filter replacement, motor and drive replacement, and spare parts lists. Include this data, product data, shop drawings, and wiring diagrams in operating and maintenance manuals; in accordance with requirements of Division 1.

1.07 ENVIRONMENTAL REQUIREMENTS

A. Do not operate units for any purpose, temporary or permanent, until ductwork is clean, filters are in place, bearings lubricated, and fan has been test run under observation.

1.08 DELIVERY, STORAGE, AND HANDLING

A. Deliver units to the site in containers with manufacturer's stamp or label affixed.

B. Protect units against dirt, water, chemical, and mechanical damage. Do not install damaged units - remove from project site.

1.09 WARRANTY

A. Provide general one year (12 months) warranty with five (5) year warranty on compressors. The warranty shall include parts, labor, travel costs, and living expenses incurred by the manufacturer to provide factory authorized service.

PART 2 - PRODUCTS

2.01 PACKAGED ROOFTOP HEATING/COOLING UNIT (GAS/ELECTRIC 3 TO 12.5 TONS)

A. General:

1. Outdoor rooftop mounted, electrically controlled heating and cooling unit utilizing a reciprocating compressor for cooling duty and gas combustion for heating duty. Unit shall discharge supply air downward or horizontally as shown on contract drawings.

2. Unit shall be rated in accordance with ARI Standards 210240 and 270. Designed in accordance with UL Standard 465.

3. Unit shall be designed to conform to ANSI/ASHRAE 15.

4. Unit shall be UL tested and certified in accordance with ANSI Z21.47 Standards and CSA or CGA certified as a total package.

5. Roof curb shall be designed to conform to NRCA Standards.

6. Insulation and adhesive shall meet NFPA 90A requirements for flame spread and smoke generation.

B. Equipment (Standard):

1. General:
   a. Units shall be manufactured by York in an ISO 9001 certified facility. YORK® Predator® units are convertible single packages with a common footprint cabinet and common roof curb for all 3 through 12-1/2 ton models. All 6-1/2 through 12-1/2 ton units have two compressors with independent refrigeration circuits to provide 2 stages of cooling. The units were designed for light commercial applications and can be easily installed on a roof curb, slab, or frame. All Predator® units are self-contained and assembled on rigid full perimeter base rails allowing for 3-way forklift access and overhead rigging. Every unit is completely charged, wired, piped, and tested at the factory to provide a quick and easy field installation. All units are convertible between side and down airflow. Independent economizer designs are used on side and down discharge applications, as well as all tonnage sizes. Predator® units are available in the following configurations: cooling only, cooling with electric heat, cooling with gas heat, heat pump, and heat pump with electric heat. Electric heaters are available as factory-installed options or field-installed accessories.

2. Unit Cabinet:
   a. Unit cabinet shall be constructed of galvanized steel with exterior surfaces coated with a non-chalking, powder paint finish, certified at 1000 hour salt spray test per ASTM-B117 standards.
   b. Indoor blower sections shall be insulated with up to 1” thick insulation coated on the airside. Aluminum foil faced insulation shall be used in the unit’s compartments and be fastened to prevent insulation from entering the air stream.
   c. Cabinet doors shall be hinged with toolless access for easy servicing and maintenance. Full perimeter base rails shall be provided to assure reliable transit of equipment, overhead rigging, fork truck access and proper sealing on roof curb applications.
   d. Disposable 2” filters shall be furnished and be accessible through hinged access door. Fan performance measuring ports shall be provided on the outside of the cabinet to allow accurate air measurements of evaporator fan performance without removing panels or creating bypass of the coils.
   e. Condensate pan shall be slide out design, constructed of stainless steel material, internally sloped and conforming to ASHRAE 62-89 standards. Condensate connection shall be a minimum of ¾” I.D. female and be rigid mount connection..

3. Fans:
   a. Indoor blower (evaporator fan):
      1) Fan shall be a belt drive assembly and include an adjustable pitch motor pulley. Job site selected brake horsepower shall not exceed the motors nameplate horsepower rating plus the service factor. Units shall be designed to operate within the service factor. Fan wheel shall be double inlet type with forward curve blades, dynamically balanced to operate smoothly throughout the entire range of operation. Airflow design shall be constant volume. Bearings shall be sealed and permanently lubricated for longer life and no maintenance. Entire blower assembly and motor shall be slide out design.
   b. Outdoor Fan:

1) The outdoor fans shall be of the direct drive type, discharge air vertically, have aluminum blades riveted to corrosion resistant steel spider brackets and shall be dynamically balanced for smooth operation. The outdoor fan motors shall have permanently lubricated bearings internally protected against overload conditions and staged independently. A cleaning window shall be provided on two sides of the units for coil cleaning.

4. Compressor:
   a. Shall be fully hermetic type, direct drive, internally protected with internal high-pressure relief and over temperature protection. The hermetic motor shall be suction gas cooled and have a voltage range of + or – 10% of the unit nameplate voltage.
   b. Shall have internal spring isolation and sound muffling to minimize vibration and noise, and be externally isolated on a dedicated, independent mounting.

5. Coils:
   a. Evaporator coils shall have aluminum plate fins mechanically bonded to seamless internally enhanced copper tubes with all joints brazed. Special Phenolic coating shall be available as a factory option.
   b. Evaporator and coils shall be of the direct expansion, draw-thru design.
   c. Condenser coils shall have aluminum plate fins mechanically bonded to seamless internally enhanced copper tubes with all joints brazed or Micro-Channel aluminum tube, aluminum fins.
   d. Condenser coils shall be of the direct expansion, draw-thru design.

6. Heating Section:
   a. Heat exchanger and exhaust system shall be constructed of aluminized steel and shall be designed with induced draft combustion with post purge logic, energy saving direct spark ignition, and redundant main gas valve. The heat exchanger shall be of the tubular type, constructed of T1-40 aluminized steel for corrosion resistance and allowing minimum mixed air entering temperature of 40 ºF. Burners shall be of the in-shot type, constructed of aluminum-coated steel. All gas piping shall enter the unit cabinet at a single location, through either the side or bottom, without any field modifications. An integrated control board shall provide timed control of evaporator fan functioning and burner ignition.
   b. Heating section shall be provided with the following minimum protection:
      1) Primary and auxiliary high-temperature limit switches.
      2) Induced draft motor speed sensor.
      3) Flame roll out switch (manual reset).
      4) Flame proving controls.
   c. All two stage gas units shall have two independent stages of capacity (70% 1st stage, 100% 2nd stage) 3 through 5 ton and (60% 1st stage, 100% 2nd stage) 6-1/2 through 12-1/2 ton.

7. Refrigerant Components: Refrigerant circuit components shall include:
   a. Acutrol feed system.
   b. Filter drier.
   c. Service gauge connections on suction, discharge and liquid lines.
   d. The 6.5 through 12.5 ton units shall have two independent refrigerant circuits, equally split in 50% capacity increments.

8. Filter Section:
   a. Standard filter section shall consist of factory installed low velocity, disposable 2" thick glass fiber filters of commercially available sizes.
   b. Filter face velocity shall not exceed 320 fpm at nominal airflows.
   c. Filter section should use only one size filter.

9. Controls and Safeties:
   a. Unit Controls: Unit shall be complete with self-contained low voltage control circuit protected by a manually resettable circuit breaker.
   b. Safeties:
      1) Unit shall incorporate a solid state compressor protector which provides reset capability at the space thermostat, should any of the following standard safety devices trip and shut off compressor:
         a) Compressor over temperature, overcurrent.
         b) Loss of charge/low pressure switch.
         c) Freezestat, evaporator coil.
         d) High-pressure switch.
      2) Heating section shall be provided with the following minimum protections:
         a) High temperature limit switch.
         b) Induced draft motor centrifugal switch.
         c) Flame rollout switch (manual reset).
         d) Flame proving controls.
      3) OPTIONAL DDC CONTROLS
         a) Provide rooftop package unit with factory installed SimplicityLINC rooftop controller
         b) For communication to BACnet Energy Management system.

10. Operating Characteristics:
   a. Unit shall be capable of starting and running at 115° F ambient outdoor temperature per maximum load criteria of ARI Standard 210/240.
   b. Compressor with standard controls shall be capable of operation down to 25° F ambient outdoor temperature.
   c. Unit provided with fan time delay of 55 seconds to prevent cold air delivery before heat exchanger warms up.

11. Electrical Requirements: All unit power wiring shall enter unit cabinet at a single factory predrilled location.

12. Motors:
   a. Compressor motors shall be cooled by suction gas passing through motor windings and shall have line break thermal and current overload protection.
   b. Indoor blower motor shall have permanently lubricated bearings and inherent automatic reset thermal overload protection.
   c. Outdoor totally enclosed motor shall have permanently lubricated bearings, and inherent automatic reset thermal overload protection.
   d. Induced draft motor shall have permanently lubricated sealed bearings and inherent automatic reset thermal overload protection.

C. Special Features and Options:

1. Provide the following options with units.
   a. Roof Curb:
      1) Formed galvanized steel with wood nailer strip and capable of supporting entire unit weight.
   b. Integrated Economizer:
      1) Integrated type capable of simultaneous economizer and compressor operation.
      2) Includes all hardware and controls to provide cooling with outside air.
      3) Equipped with a single sliding plate low leakage type damper.
      4) Capable of introducing up to 100% outside air.
      5) Equipped with a gravity relief damper.
   c. Manual Damper:

1) Manual damper package shall consist of damper, bird screen and rain hood which can be preset to admit up to 50% outdoor air for year round ventilation.

d. Two Position Damper:
   1) Two-position damper package shall include single blade damper and motor. Admits up to 50% outdoor air.
   2) Damper shall close upon indoor fan shutoff.

e. Optional Compressor Cycle Delay:
   1) Compressor shall be prevented from restarting for a minimum of 5 minutes after shutdown.

f. Solid State Enthalpy Control:
   1) For use with economizer package only.
   2) Capable of sensing outdoor air heat content (temperature and humidity) and control economizer cut-in point to have minimum heat content air passing over the evaporator coil for most efficient system operation.

g. Differential Enthalpy Sensor:
   1) For use with economizer only.
   2) Capable of comparing heat content (temperature and humidity) of outdoor air and return air and controlling economizer cut-in point at the most economical level.

h. Head Pressure Control Package:
   1) Consists of solid-state control and condenser coil temperature sensor to maintain condensing temperature between 90° F and 110° F at outdoor ambient temperatures down to -20° F by either condenser fan speed modulation or condenser fan cycling.

i. Remote Control Panel: Panel shall be a decorative, indoor, wall mounted panel consisting of:
   1) Two stage heat/two stage cool thermostat.
   2) Automatic changeover.
   3) System switch with HEAT - COOL - AUTO - OFF settings.
   4) Fan switch with ON - AUTO settings.
   5) Indicator lights for HEAT - COOL - FAN operation.
   6) Three unused indicator lights for field use.

j. Electronic Programmable Thermostat:
   1) Capable of using deluxe full featured electronic thermostat.

k. Thermostat and Subbase:
   1) Provides staged cooling and heating automatic (or manual) changeover, fan control and indicator light.

D. Manufacturer: York Model ZJ or approved equal by Carrier, Trane, or Lennox.

2.02 PACKAGED ROOFTOP HEATING/COOLING UNIT (GAS/ELECTRIC 15 TO 25 TONS)

A. General:

1. Outdoor rooftop mounted, electrically controlled heating and cooling unit utilizing a reciprocating compressor for cooling duty and gas combustion for heating duty. Unit shall discharge supply air downward or horizontally as shown on contract drawings.

2. Unit shall be rated in accordance with ARI Standards 210/240 or 360 and 270. Designed in accordance with UL Standard 465.

3. Unit shall be designed to conform to ANSI/ASHRAE 15-1978.

4. Unit shall be UL tested and certified in accordance with ANSI Z21.47 Standards and CSA certified as a total package.

5. Roof curb shall be designed to conform to NRCA Standards.

6. Insulation and adhesive shall meet NFPA 90A requirements for flame spread and smoke generation.

B. Equipment (Standard):

1. General:
   a. The units Sunline Magnum™ ZJ Series units are convertible single package units. All models have independent refrigerant circuits for efficient part load operation and maximum comfort control. Although the units are primarily designed for curb mounting on a roof, they can also be slab-mounted at ground level or set on steel beams above a finished roof. Cooling only, cooling with gas heat and cooling with electric heat models are available with a wide variety of factory-mounted options and field-installed accessories to make them suitable for almost every application. All units are self-contained and assembled on full perimeter base rails with holes in the four corners for overhead rigging. Every unit is completely piped, wired, charged and tested at the factory to simplify the field installation and to provide years of dependable operation. All models (including those with an economizer) are suitable for either bottom or horizontal duct connections. Models with power exhaust are suitable for bottom duct connections only. For bottom duct, remove the sheet metal panels from the supply and return air openings through the base of the unit. For horizontal duct, replace the supply and return air panels on the rear of the unit with a side duct flange accessory. All supply air blowers are equipped with a belt drive that can be adjusted to meet the exact requirements of the job.
   b. Each unit shall have multiple condenser fan motors. A high speed drive accessory is available for applications with a higher CFM and/or static pressure requirement. All compressors include crankcase heat and internal pressure relief. Every refrigerant circuit includes an expansion valve, a liquid line filter-drier, a discharge line high pressure switch and a suction line with a freezestat and low pressure/loss of charge switch. The unit control circuit includes a 75 VA transformer, a 24-volt circuit breaker and a relay board with two compressor lockout circuits, a terminal strip for thermostat wiring, plus an additional set of pin connectors to simplify the interface of additional field controls. All units have long lasting powder paint cabinets with 1000 hour salt spray test approval under ASTM-B117 procedures. All 208/230, 460 and 575-volt models are CSA approved. All models include a 1-year limited warranty on the complete unit. Compressors and electric heater elements carry an additional 4-year warranty. Aluminized steel tubular heat exchangers carry an additional 9-year warranty.

2. Unit Cabinet:
   a. Unit cabinet shall be constructed of G90 galvanized steel, with exterior surfaces coated with a non-chalking, powdered paint finish, certified at 1000 hours salt spray test per ASTM-B117 standards.
   b. Indoor blower section shall be insulated with a minimum 1/2" thick insulation, coated on the airside. Aluminum foil faced insulation shall be used in the furnace compartment and be fastened with ridged fasteners to prevent insulation from entering the air stream.
   c. Cabinet panels shall be "large" size, easily removable for servicing and maintenance. Full perimeter base rails shall be provided to assure reliable transit of equipment, overhead rigging and proper sealing on roof curb applications.
   d. Disposable 2" filters shall be furnished and be accessible through a removable access door, sealed airtight. Units filter track shall be designed to accommodate either 2" or 4" filters.

e. Fan performance measuring ports shall be provided on the outside of the cabinet to allow accurate air measurements of evaporator fan performance without removing panels or creating air by-pass of the coils.
f. Condensate pan shall be internally sloped and conform to ASHRAE 62-89 self-draining standards. Condensate connection shall be a minimum of 1" I.D. female and be a ridged mount connection.
g. Unit shall incorporate a fixed outdoor air damper with an outdoor air intake opening covered with a bird screen and a rain hood painted to match the exterior of the unit.

3. Fans:
   a. Indoor blower (evaporator fan):
      1) Fan shall be a belt drive assembly and include an adjustable- pitch motor pulley. Job site selected (B.H.P.) brake horsepower shall not exceed the motors nameplate horsepower rating, plus the service factor. Units shall be designed not to operate above service factor. Fan wheel shall be double-inlet type with forward-curved blades, dynamically balanced to operate smoothly throughout the entire range of operation. Airflow design shall be constant air volume.
   b. Outdoor (condenser):
      1) The outdoor fans shall be of the direct-driven propeller type, discharge air vertically, have aluminum blades riveted to corrosion resistant steel spider brackets and shall be dynamically balanced for smooth operation. The outdoor fan motors shall be totally enclosed with permanently lubricated bearings, internally protected against overload conditions and staged independently.
   c. Indoor blower shall be made from steel with a corrosion resistant finish and shall be dynamically balanced.
   d. Outdoor (condenser) fan shall be of the direct driven propeller type and shall discharge air vertically upward.
   e. Outdoor fan shall have aluminum blades riveted to corrosion resistant steel spiders and shall be dynamically balanced.
   f. Induced draft blower shall be of the direct driven single inlet forward curved centrifugal type, made from steel with a corrosion resistant finish and dynamically balanced.

4. Compressor:
   a. Fully hermetic type, on independent circuits and internally protected.
   b. Factory rubber shock mounted and internally spring mounted for vibration isolation.
   c. Equipped with a factory installed crankcase heater to minimize liquid refrigerant accumulation in compressor during shutdown and prevent refrigerant dilution of oil.

5. Coils:
   a. Evaporator and condenser coils shall have aluminum plate fins mechanically bonded to seamless copper tubes with all joints brazed and degreased at the factory.
   b. Tube sheet openings shall be belled to prevent tube wear.

6. Heating Section:
   a. Shall be designed with induced draft combustion with post purge logic, energy saving direct spark ignition, and redundant main gas valve. Venter wheel shall be constructed of stainless steel for corrosion resistance. The heat exchanger shall be of the tubular type, constructed of T1-40 aluminized steel for corrosion resistance and allowing minimum mixed air entering temperature of 25°F. Burners shall be of the in-shot type, constructed of aluminum coated steel and contain air mixture adjustments. All gas piping shall enter the unit cabinet at a single location through either the side or curb without any field modifications. An integrated control board shall provide timed control of evaporator fan functioning and burner ignition.
   b. Heating section shall be provided with the following minimum protection:
      1) Primary and auxiliary high-temperature limit switches.
      2) Induced draft motor speed sensor.

3) Flame roll out switch (automatic reset).
4) Flame proving controls. Unit shall have two independent stages of capacity.

7. Refrigerant Components:
   a. Refrigerant circuit components shall include:
      1) Balance-port thermostatic expansion valve with independent circuit feed system.
      2) Filter drier/strainer to eliminate any moisture or foreign matter.
      3) Accessible service gage connections on both suction and discharge lines to charge, evacuate, and measure refrigerant pressure during any necessary servicing or troubleshooting, without losing charge.
      4) The refrigeration system shall provide at least 15° F of sub-cooling at design conditions.
      5) All models shall have independent refrigerant circuits.
      6) Optional factory-installed Hot Gas Bypass (HGBP) option shall be installed on compressor #1 discharge line to provide cooling in low-load applications. HGBP shall be a standard feature on VAV models and an optional feature on CV models.

8. Filter Section:
   a. 4" thick glass fiber filters of commercially available sizes.
   b. Filter face velocity shall not exceed 320 fpm at nominal airflows.

9. Controls and Safeties:
   a. Unit Controls:
      1) Unit shall be complete with self-contained low voltage control circuit protected by a manually resettable circuit breaker.
   b. Safeties:
      1) Unit shall incorporate a solid state compressor protector which provides reset capability at the space thermostat, should any of the following safety devices trip and shut off compressor:
         a) Compressor overtemperature, overcurrent.
         b) Loss of charge/low pressure switch.
         c) Freezestat, evaporator coil.
         d) High-pressure switch.
      2) Heating section shall be provided with the following minimum protections:
         a) High temperature limit switch.
         b) Induced draft motor centrifugal switch.
         c) Flame rollout switch (manual reset).
         d) Flame proving controls.

10. *OPTIONAL DDC CONTROLS - Provide rooftop package unit with factory installed Simplicity LINC rooftop controller for communication to BACnet Energy Management system.

11. Operating Characteristics:
    a. Unit shall be capable of starting and running at 115° F ambient outdoor temperature per maximum load criteria of ARI Standard 210/240 or 360.
    b. Compressor with standard controls shall be capable of operation down to 25° F ambient outdoor temperature.
    c. Unit provided with fan time delay of 55 seconds to prevent cold air delivery before heat exchanger warms up.

12. Electrical Requirements:
    a. All unit power wiring shall enter unit cabinet at a single factory predrilled location.

13. Motors:
    a. Compressor motors shall be cooled by suction gas passing through motor windings and shall have line break thermal and current overload protection.
    b. Indoor blower motor shall have permanently lubricated bearings and inherent automatic reset thermal overload protection.
    c. Outdoor totally enclosed motor shall have permanently lubricated bearings, and inherent automatic reset thermal overload protection.
    d. Induced draft motor shall have permanently lubricated sealed bearings and inherent automatic reset thermal overload protection.

C. Special Features and Options:

1. Provide the following options with units.
    a. Roof Curb:
        1) Formed galvanized steel with wood nailer strip and capable of supporting entire unit weight.
    b. Integrated Economizer:
        1) Integrated type capable of simultaneous economizer and compressor operation.
        2) Includes all hardware and controls to provide cooling with outside air.
        3) Equipped with low leakage dampers not to exceed 3% leakage, at 1.0" wg pressure differential.
        4) Capable of introducing up to 100% outside air.
        5) Equipped with a gravity relief damper.
    c. Manual Damper: Manual damper package shall consist of damper, bird screen and rain hood which can be preset to admit up to 50% outdoor air for year round ventilation.
    d. Two Position Damper:
        1) Two-position damper package shall include single blade damper and motor. Admits up to 100% outdoor air.
        2) Damper shall close upon indoor fan shutoff.
    e. Optional Compressor Cycle Delay: Compressor shall be prevented from restarting for a minimum of 5 minutes after shutdown.
    f. Solid State Enthalpy Control:
        1) For use with economizer package only.
        2) Capable of sensing outdoor air heat content (temperature and humidity) and control economizer cut-in point to have minimum heat content air passing over the evaporator coil for most efficient system operation.
    g. Differential Enthalpy Sensor:
        1) For use with economizer only.
        2) Capable of comparing heat content (temperature and humidity) of outdoor air and return air and controlling economizer cut-in point at the most economical level.
    h. Head Pressure Control Package:
        1) Consists of solid-state control and condenser temperature sensor for head pressure control.
        2) Capable of controlling outdoor fan motor cycling to maintain condensing temperature between 90° F and 110° F at outdoor ambient temperatures down to -20° F.
    i. Remote Control Panel: Penal shall be a decorative, indoor, wall mounted panel consisting of;
        1) Two stage heat/two stage cool thermostat.
        2) Automatic changeover.
        3) System switch with HEAT - COOL - AUTO - OFF settings.
        4) Fan switch with ON - AUTO settings.
        5) Indicator lights for HEAT - COOL - FAN operation.

6) Three unused indicator lights for field use.

j. Electronic Programmable Thermostat: Capable of using deluxe full featured electronic thermostat.

k. Thermostat and Subbase: Provides staged cooling and heating automatic (or manual) changeover, fan control and indicator light.

D. Manufacturer: York Model ZF or approved equal by Carrier, Trane, or Lennox.

2.03 SPRING ISOLATING ROOF CURB

A. Curb mounted rooftop packaged air conditioning air handlers shall be flexibly ducted, provided with double arch EPDM Expansion Joints, and electrical lines with flexible conduits. The units shall be supported by a spring isolation curb, the lower member of which is a rigid steel tube or a specially formed steel section containing adjustable and removable steel springs that support the upper floating section. The upper frame must provide continuous support for the equipment and must remain captive when resiliently resisting wind and seismic forces. All directional neoprene snubber bushings must be a minimum of 1/2" thick. Steel springs shall rest on 1/4" neoprene acoustical pads. Minimum spring deflection shall be 1 1/2". Hardware must be cadmium or zinc electroplated and the springs similarly plated or provided with an approved rust resistant finish.

B. The curb's waterproofing shall consist of a continuous galvanized flexible counterflashing nailed over the lower curb's waterproofing and joined at the corners by EPDM bellows. All spring locations shall have access ports with removable waterproof covers.

C. The floating member of the roof curb shall have perimeter angle and cross members to support two layers of 5/8" waterproof sheetrock laid on with stagered joints. Sheetrock must surround ducts to provide a continuous sound break. This acoustical barrier shall be caulked to minimize sound transmission. Where the mechanical arrangement makes attachment to the floating member unfeasible, the barrier shall be attached at the highest practical elevation of the fixed curb with provision for 1" thick closed cell neoprene flexible seals around the ductwork. A four inch layer of 1.5 density fiberglass shall cover the entire solid roof surface under the unit. Ductwork shall be lined with sound absorbent material.

D. Curbs shall be Provent Type ISCAL or approved equal.

PART 3 - EXECUTION

3.01 EXAMINATION

A. Verify that mounting surface, e.g. roof, is ready to receive work.

B. Verify that proper power supply is available.

3.02 INSTALLATION

A. Install in accordance with manufacturer's instructions.

B. Provide layout drawings of units, locations and power requirements to electrical installer.

C. Install minimum 30% efficiency air filters in unit during installation phase. Do not operate the unit without filters in place.

D. Mount rooftop unit on factory built roof mounting frame. Install roof mounting frame level.

E. Install 3" flexible duct connection at inlets and outlets of units.

F. Install condensate drain piping and traps in accordance with manufacturer's instructions and as shown on the Drawings.

G. Control installers shall install thermostat and all wiring associated with control signals into the units.

H. Electrical installer shall install all line voltage power wiring and conduit. Coordinate with Division 26 work.

I. Install a new set of filters prior to final air balance and substantial completion.

3.03 MANUFACTURER'S START-UP SERVICES

A. The manufacturer shall provide start-up service in the form of a factory trained service technician. The service technician shall verify correct installation, verify unit mounting, verify fan rotation, verify spring isolator adjustments, verify control wiring, verify power wiring, start-up the fans, and check for proper operation. The service technician shall provide final adjustments to meet the specified performance requirements. Fully staffed parts and service personnel shall be within four hours travel from the job site.

END OF SECTION

SECTION 238125

MINI-SPLIT AIR CONDITIONING UNITS

PART 1 - GENERAL

1.01 APPLICABLE REQUIREMENTS

A. All work to be furnished and installed under this section shall comply with all the requirements of General Conditions, Supplemental Conditions, Division 01 - General Requirements, Section 230500 - Basic Materials and Methods, and other Sections in Division 23 specified herein.

1.02 SCOPE

A. All work to be furnished and installed under this Section shall comply with all the requirements of Division 01, and shall include, but not necessarily be limited to, the following:

1. Split air conditioning unit.

2. Controls and control connections.

3. Electrical power connections.

1.03 RELATED WORK SPECIFIED ELSEWHERE

A. Section 230500: Basic Materials and Methods

B. Section 230593: Testing, Adjusting and Balancing

C. Section 230700: Mechanical Insulation

D. Section 232300: Refrigerant Piping Systems

E. Section 233113: Air Distribution

F. Division 26: Electrical

1.04 QUALITY ASSURANCE

A. Manufacturer's Qualifications: Provide packaged units that are the standard product of an equipment manufacturer regularly engaged in the production of such units who issues complete catalog information on such products. Units shall not be fabricated by the Contractor.

B. Codes and Standards: Provide air handling units conforming to the requirements of the latest addition of the following:

1. Air Movement and Control Association (AMCA):
   a. 99 Standards Handbook

b. 210 Laboratory Methods of Testing Fans for Rating [Unit shall bear AMCA Certified Rating Seal]

2. Air-Conditioning and Refrigeration Institute (ARI):
   a. 210 Unitary Air-Conditioning Equipment
   b. 270 Sound Rating of Outdoor Unitary Equipment

3. National Electrical Manufacturers Association (NEMA): Except for motors, provide electrical components required as part of air handling units, which comply with NEMA Standards.

4. National Fire Protection Association (NFPA): Provide unit internal insulation having flame spread rating not higher than 25 and smoke developed rating not higher than 50:
   a. 70 National Electrical Code
   b. 90A Standard for the Installation of Air Conditioning and Ventilating Systems
   c. 90B Standard for the Installation of Warm Air Heating and Air Conditioning Systems

5. Sheet Metal and Air Conditioning Contractors' National Association, Inc. (SMACNA): Comply with applicable SMACNA standards including "HVAC Duct Construction Standards - Metal and Flexible."

6. Underwriters Laboratories, Inc. (UL): Except for motors, provide electrical components required as part of units, which have been listed and labeled by UL.

1.05 SUBMITTALS

A. Product Data: Submit manufacturer's technical product data for systems with air handler units, evaporator coils, and outdoor condensing units showing dimensions, weights, capacities, ratings, fan performance with operating point clearly indicated, motor electrical characteristics, finishes of materials, installation instructions, sound and vibration test report, and bearing life calculations.

B. Maintenance Data: Submit maintenance instructions, including instructions for lubrication, filter replacement, motor and drive replacement, and spare parts lists. Include this data, product data, shop drawings, and wiring diagrams in operating and maintenance manuals; in accordance with requirements of Division 01.

1.06 ENVIRONMENTAL REQUIREMENTS

A. Do not operate units for any purpose, temporary or permanent, until ductwork is clean, filters are in place, bearings lubricated, and fan has been test run under observation.

1.07 DELIVERY, STORAGE, AND HANDLING

A. Deliver products to site under provisions of Division 01. Deliver units to the site in containers with manufacturer's stamp or label affixed.

B. Store/protect products under provisions of Division 01. Protect units against dirt, water, chemical, and mechanical damage. Do not install damaged units - remove from project site.

1.08 WARRANTY

A. Provide general one year (12 months) warranty from date of installation and five (5) year warranty on compressors under provisions of Division 01. The warranty shall include parts, labor, travel costs, and living expenses incurred by the manufacturer to provide factory authorized service.

PART 2 - PRODUCTS

2.01 SPLIT SYSTEM AIR CONDITIONING UNIT WITH INDOOR FAN COIL

A. Acceptable Manufacturers: Mitsubishi, Sanyo, or approved equal.

B. Indoor Fan Coil Unit

1. General:
   a. The indoor unit shall be factory assembled, wired and tested. Contained within the unit shall be all factory wiring and internal piping, control circuit board and fan motor. The unit in conjunction with the wired, wall mounted controller shall have a self-diagnostic function, 3-minute time delay mechanism, an auto restart function, and a test run switch. Indoor unit and refrigerant pipes shall be purged with dry nitrogen before shipment from the factory.
   b. The indoor unit sound pressure level shall not exceed the following values: 12,000 BTU/h unit = 23 dB(A) in low fan speed, 28 dB(A) in med fan speed and 33 dB(A) in high fan speed 18,000 BTU/h unit = 30 dB(A) in low fan speed, 34 dB(A) in med fan speed and 38 dB(A) in high fan speed
   c. Manufacturers unable to meet this criteria will only be considered as an alternate to specified and as a deduct to base bid. Manufacturers listed by name do not imply that their standard construction meets the specifications nor that they are approved. All manufacturers are required to meet all details of this specification without exception.

2. Unit cabinet (ducted):
   a. Shall be space saving, low profile, horizontal, ducted type. Formed cabinet shall be constructed of G-60 galvanized steel with applied insulation to prevent condensation on outer surfaces.
   b. The cabinet shall be provided with four mounting brackets to accommodate suspension from threaded rod or structural support located on the side panels in all four corners. Brackets shall be suitable for supporting the weight of the indoor unit.
   c. The indoor unit cabinet shall be equipped with a ducted air outlet and ducted rear return air connection.

3. Unit cabinet (wall mounted):
   a. The casing shall have a smooth front, white finish – Munsell 1.0Y 9.2/0.2. Multi-directional drain connection and refrigerant piping, offering three (3) directional pipe alignments for all refrigerant piping and two (2) direction pipe alignments for condensate draining shall be standard.
   b. There shall be a separate, metal installation-plate that secures the indoor unit firmly to the wall. The installation-plate shall be securely attached to the wall using appropriate anchor method. Installing contractor shall determine the best method and be responsible for proper mounting of the installation plate to the wall.

4. Fan Assembly (ducted):
   a. The indoor unit fan unit shall be an assembly with Sirocco fans direct driven by a single motor. Fan shall develop airflow to deliver up to 0.20 inches wg of external static pressure.

b. The indoor fans shall be statically and dynamically balanced to run on a motor with permanently lubricated bearings. The indoor fans shall operate on any of three (3) speeds, High, Mid, and Low.

5. Fan Assembly (ducted):
   a. The indoor unit fan shall be an assembly with a line-flow fan direct driven by a single motor. The fan shall be statically and dynamically balanced and be powered by a motor with permanently lubricated bearing. An integral, motorized, multi-position, horizontal air sweep vane shall provide for uniform air distribution, up and down. Vane shall have 5 selectable positions plus AUTO (Controls position based upon mode, microprocessor shall automatically determine the vane angle to provide the optimum room temperature distribution) and SWING (Continuously moves up and down). In OFF mode the horizontal vane shall return to the closed position.

6. Coils:
   a. Shall be ARI certified.
   b. The indoor coil shall be of nonferrous construction with smooth plate fins on copper tubing. The tubing shall have inner grooves for high efficiency heat exchange. All tube joints shall be brazed with PhosCopper or silver alloy. The coils shall be pressure tested at the factory.
   c. A condensate pan and with two (2) drains shall be provided under the coil.
   d. In addition to the two (2) gravity drains, the indoor unit shall be provided with an integral condensate lift mechanism able to raise drain water 21 inches above the condensate pan. Lift mechanism shall incorporate a safety sensor system to shut down the indoor fan and the compressor in the outdoor unit in the event of high level of condensate in the drain pan.

7. Filter shall be provided by manufacturer.

8. Unit Suspension: The electrical power of the unit shall be 208/230Volts, 1 phase, 60 hertz. The system shall be capable of satisfactory operation within voltage limits of 198 volts to 253 volts. The power to the indoor unit shall be supplied from the outdoor unit, using Mitusbishi Electric A-Control system.

9. Electrical: The unit electrical power shall be 115 volts, 1 phase, 60 hertz.

10. Controls
   a. The control system shall consist of two (2) microprocessors, one on each indoor and outdoor unit, interconnected by a single non-polar two-wire cable. Field wiring shall run directly from the indoor unit to the wall mounted controller with no splices.
   b. For A-Control, a three (3) conductor 14 ga. AWG wire with ground shall provide power feed and bi-directional control transmission between the outdoor and indoor units.
   c. The system shall be capable of automatic restart when power is restored after power interruption. The system shall have self-diagnostics ability, including total hours of compressor run time. Diagnostics codes for indoor and outdoor units shall be displayed on the wired controller panel.
   d. The microprocessor located in the indoor unit shall have the capability of monitoring return air temperature and indoor coil temperature, receiving and processing commands from the wired controller, providing emergency operation and controlling the outdoor unit.
   e. The indoor unit shall be connected to a wall mounted wired controller to perform input functions necessary to operate the system. The wired controller shall have a large multi-language DOT liquid crystal display (LCD) presenting contents in eight (8) different languages, including English, French, Chinese, German, Japanese, Spanish, Russian, and Italian.

f. There shall be a built-in weekly timer with up to eight pattern settings per day. The controller shall consist of an On/Off button, Increase/Decrease Set Temperature buttons, a Heat/Cool/Auto/Dry mode selector, a Timer Menu button, a Timer On/Off button, Set Time buttons, a Fan Speed selector, a Ventilation button, a Test Run button, and a Check Mode button. The controller shall have a built-in temperature sensor. Temperature shall be displayed in either Fahrenheit (°F) or Celsius (°C). Temperature changes shall be by increments of 1°F (1°C) with a range of 67°F to 87°F (19°C to 30°C).

g. The wired controller shall display operating conditions such as set temperature, room temperature, pipe temperatures (i.e. liquid, discharge, indoor and outdoor), compressor operating conditions (including running current, frequency, input voltage, On/Off status and operating time), LEV opening pulses, sub cooling and discharge super heat. Normal operation of the wired controller shall provide individual system control in which one wired controller and one indoor unit are installed in the same room. The controller shall have the capability of controlling up to a maximum of sixteen systems, as a group with the same mode and set-point for all, at a maximum developed control cable distance of 1,500 feet (500 meters).

h. The wired controller shall display operating conditions such as set temperature, room temperature, pipe temperatures (i.e. liquid, discharge, indoor and outdoor), compressor operating conditions (including running current, frequency, input voltage, On/Off status and operating time), LEV opening pulses, sub cooling and discharge super heat.

i. The control voltage from the wired controller to the indoor unit shall be 12/24 volts, DC. The control signal between the indoor and outdoor unit shall be pulse signal 24 volts DC. Up to two wired controllers shall be able to be used to control one unit.

j. Control system shall provide On/Off and mode switching. The controller shall have the capability to provide sequential starting with up to fifty seconds delay.

k. *OPTIONAL – DDC Control:

1) Controls Contractor shall provide necessary relays and switches to indoor unit to monitor start, stop and status of split system.

C. Outdoor Condensing Unit:

1. General: The outdoor unit shall be compatible with different types of indoor units. The connected indoor unit must be of the same capacity as the outdoor unit. The outdoor unit shall be equipped with a control board that interfaces with the indoor unit to perform all necessary operation functions. The outdoor unit shall be capable of operating at 0°F (-18°C) ambient temperature without additional low ambient controls (optional wind baffle may be required). The outdoor unit shall be able to operate with a maximum height difference of 100 feet (30 meters) between indoor and outdoor units.

2. Cabinet: The casing shall be constructed from galvanized steel plate, coated with a finished with an electrostatically applied, thermally fused acrylic or polyester powder coating for corrosion protection and have a munsell 3Y 7.8/1.1 finish. The fan grille shall be of ABS plastic.

3. Fan: Shall be furnished with an AC fan motor. The fan shall be of aerodynamic design for quiet operation, and the fan motor bearings shall be permanently lubricated. The outdoor unit shall have horizontal discharge airflow. The fan shall be mounted in front of the coil, pulling air across it from the rear and dispelling it through the front. The fan shall be provided with a raised guard to prevent contact with moving parts.

4. Coil: The L shaped condenser coil shall be of copper tubing with flat aluminum fins to reduce debris build up. The coil shall be protected with an integral metal guard. Refrigerant flow from the condenser shall be controlled by means of an electronic linear expansion valve

(LEV) metering device. The LEV shall be controlled by a microprocessor controlled step motor.

5. Compressor: The compressor shall be a DC rotary compressor with Variable Compressor Speed Inverter Technology. The compressor shall be driven by inverter circuit to control compressor speed. The compressor speed shall dynamically vary to match the room load for significantly increasing the efficiency of the system which results in vast energy savings. To prevent liquid from accumulating in the compressor during the off cycle, a minimal amount of current shall be intermittently applied to the compressor motor to maintain enough heat.

6. The outdoor unit shall have an accumulator and high pressure safety switch. The compressor shall be mounted to avoid the transmission of vibration.

D. Electrical: Unit electrical power shall be 208/230 volts, 1 phase, 60 hertz. The outdoor unit shall be controlled by the microprocessor located in the indoor unit. The control voltage between the indoor unit and the outdoor unit shall be 12 volts, DC.

PART 3 - PRODUCTS

3.01 EXAMINATION

A. Verify that mounting surfaces are ready to receive work.

B. Verify that proper power supply is available.

3.02 INSTALLATION

A. Install in accordance with manufacturer's instructions.

B. Provide layout drawings of units, locations and power requirements to electrical installer.

C. Install air filters in unit during installation phase. Do not operate the unit without filters in place.

D. In the case of suspended units, mount the fan coil units on springs or from spring hangers as required and as shown on Drawings. Provide Mason #DNHS combination isolator hangers to fully support horizontal units hung from building framing.

E. Provide 4" high concrete pad extending 6" beyond edge of condensing unit on all sides. Attach condensing unit to concrete pad with concrete anchors and angle brackets.

F. Install condensate drain piping and traps in accordance with manufacturer's instructions and as shown on the Drawings.

G. Install copper refrigerant piping and insulate lines.

H. Install controller and all wiring associated with control signals between air handling unit and condensing unit. Conceal low voltage wiring in building structure, or inside the refrigerant pipe insulation, or in conduit.

I. Electrical installer shall install all line voltage power wiring and conduit. Coordinate with Division 26 work.

J. Install a new set of filters prior to final air balance and substantial completion.

3.03 MANUFACTURER'S START-UP SERVICES

A. The manufacturer shall provide start-up service in the form of a factory trained service technician. The service technician shall verify correct installation, verify unit mounting, verify fan rotation, verify spring isolator adjustments, verify control wiring, verify power wiring, start-up the fans, and check for proper operation. The service technician shall provide final adjustments to meet the specified performance requirements. Fully staffed parts and service personnel shall be within four hours travel from the job site.

END OF SECTION

SECTION 260000

ELECTRICAL

PART 1 - GENERAL

1.01 GENERAL REQUIREMENTS

A. Requirements of Division 01 shall apply to this section.

B. These General Requirements apply to entire Division 26 and to electrical work, material and equipment specified in other divisions.

1.02 SCOPE

A. Work under this section consists of all labor, material, equipment, services, permits, fees and transportation necessary for, and/or reasonably incidental to, the construction and completion in working order of electrical work shown on the accompanying drawings and/or specified herein.

B. Work includes, but is not limited to, the following:

1. Distribution systems for power and lighting.

2. Grounding system for service and equipment.

3. Lighting system including fixtures, lamps, supports, outlets, devices, plates, branch circuiting and control.

4. Outlet system including outlets, devices, plates and branch circuiting.

5. Telephone and data raceway system including raceways, outlets, pull wires, sleeves, terminals, grounding.

6. Conduit and wiring system for heating, ventilating, air conditioning and plumbing, including connection, disconnect switches and items of industrial control (where not part of package controls). Connection to air conditioning packaged controls furnished under Division 23.

7. Conduit and wiring for HVAC control where not furnished under mechanical section.

8. Conduit, wiring, outlets, devices and connections to electrical equipment furnished under other sections or by Owner for a complete installation. Installation of controls furnished under other sections.

9. Elevator power and lighting system. Provisions for communications. Ionization detectors and wiring to elevator controls (where not under Life Safety Fire Alarm Section). Elevator monitoring conduit.

10. Code required access panels to electrical equipment in concealed locations. Location coordinated with Architect.

11. Excavation and backfill for work under this section.

12. Precast pull boxes, pull irons, cable racks, concrete conduit encasement.

13. Templates and coordination of installation of formed concrete for electrical work such as concrete bases, trenches, equipment pads, light pole foundations, curbs.

14. Shop drawings, wiring diagrams, equipment data, record drawings, operation manuals.

15. Hanger, anchors, sleeves, chases, core drilling, metal supports, channels, plywood backing, vibration isolation, seismic bracing, as required for work under this section.

16. Cleaning, patching, repairing and touch up painting as required for work under this section.

17. Permits and fees.

18. Testing, adjusting of completed work, inspections and instruction.

19. Temporary power and lighting for work under this section.

20. Emergency lighting system.

21. Signal and communication empty raceway and outlet systems. Equipment and wiring under other sections or by Owner.

1.03 RELATED WORK SPECIFIED ELSEWHERE OR BY OTHERS

A. Temporary service and wiring except as required for this section (Division 01).

B. Setting of motors furnished under other divisions (Trades).

C. Finish painting of flush mounted electrical equipment in public areas (Section "Painting").

D. Formed concrete except templates (Section "Concrete").

E. Furnishing of variable speed controllers (Division 23).

F. Furnishing of packaged air conditioning controls (Division 23).

G. Telephone cable and instruments (utility company or Owner).

H. Signal and communication systems wiring and equipment (separate section or by Owner).

I. Elevator motors and controls (Section "Elevators").

J. Building automation, fire alarm and security system (separate section).

1.04 LEGAL REQUIREMENTS AND STANDARDS

A. Codes and regulations: Comply with applicable sections of national, state and local codes, laws, ordinances, rules and regulations of authorities having jurisdiction, including:

1. California Energy Commission (CEC).

2. California State Building Code, Title 24.

3. City and State Electrical Codes. Applicable portion of local Building Codes.

4. National Electric Code (NEC).

5. National Fire Protection Association (NFPA).

6. Occupational Safety and Health Administration (OSHA).

7. Serving utility company (service and metering requirements).

8. State and local fire regulations and requirements.

9. Underwriters' Laboratories, Inc. (UL).

B. Standards: Comply with latest editions of applicable regulations and standards of:

1. American National Standards Institute (ANSI).

2. American Society for Testing and Materials (ASTM).

3. Certified Ballast Manufacturers (CBM).

4. Energy Policy and Conservation Act (EPCA) National Energy Conservation Amendments (NAECA).

5. Institute of Electrical and Electronics Engineers (IEEE).

6. Insulated Cable Engineers Association (ICEA)

7. National Institute of Standards and Technology, (NIST).

8. National Electrical Manufacturers Association (NEMA).

9. National Electrical Testing Association (NETA).

10. National Uniform Seismic Installation Guidelines (NUSIG).

C. Minimum Requirements:

1. Comply with the requirements of authorities and listed standards as minimum acceptable work. In case of conflict between the requirements, the most stringent govern.

2. The drawings and specifications take precedence when they call for materials or construction of better quality or larger size then required by codes, laws, rules and regulations.

D. Permits: Obtain permits and inspections, and pay for all fees, unless otherwise specified. Deliver all certificates of inspection to the Architect.

E. Guarding:

1. Provide protection for moving parts and hazardous conditions.

2. Provide industrial accident and warning signs per ANSI and OSHA.

3. Erect and maintain suitable barriers, protective devices, lights and warning signs for the protection of the public and employees from the work under this section.

4. Conform with applicable safety regulations, including those of the Architect and Owner.

1.05 SUBSTITUTION OF MATERIALS

A. The applicable paragraphs of General Requirements, Division 1, shall apply herein. Substitutions after award of the contract will not be considered.

B. Basis for Design: Manufacturer's names, products and numbers listed on the drawings or in these specifications, along with specific descriptions in these specifications, set the standards of quality and performance. Select products of one of the listed manufacturers meeting these standards and modify standard catalog items where required to meet specifications. Provide specified material and equipment unless specifically approved otherwise.

C. Equivalence: The phrase "or equivalent by" followed by manufacturer's name means that this manufacturer's product shall match the performance, construction, fit and features specified.

D. Substitutions: Submit proposed substitutions along with alternate price, complete descriptive data and a comparison of the substitute manufacturer's product with specified product. In proposing a substitution, assume full responsibility for any associated modifications in building openings, circuiting, control wiring, and space considerations, and bear all costs. Architect reserves right to reject any proposed substitution.

E. Liability of Substitutions: Substituted items to perform equivalent to or better than the item used for basis for design, and meet all requirements of above "or equivalent by" clause. Should the substituted item fail to perform in accordance with specifications, replace with the originally specified item without extra compensation.

1.06 SUBMITTALS OF MATERIALS AND EQUIPMENT

A. General: Make submittals in accordance with the General Conditions, in order as listed. Submit material list, and obtain review, prior to submission of manufacturer's data and shop drawings.

B. Submittals: Piecemeal submittals will not be acceptable. Submit in brochure form with all listings referenced to applicable paragraph in the specifications.

C. Review: Submittals will be reviewed for general design only, and not for method of assembly, erection, construction, or detailed compliance with Contract Documents.

D. Condition of Acceptance of Submittals: No deviation from Contract Documents is permitted unless specifically so noted by Contractor and accepted by Architect in writing.

E. Contractor Responsibility:

1. Error or omissions in submittals regardless of review status of submittals.

2. Coordination with work of other trades.

3. Space coordination and maintenance of code required aisle space.

4. Erection and installation techniques, including structural adequacy and bracing suitable for stability and/or seismic conditions.

5. Maintenance of installation safety.

6. Satisfactory performance of all work.

F. Manufacturer's Data:

1. Submit with associated shop drawings.

2. For material specified to meet trade standards of Federal Specifications, furnish the manufacturer's or vendor's certification that the material furnished for the work equals or exceeds referenced standards or specifications.

3. Furnish certification from suppliers and/or manufacturers of materials and equipment that such items meet or exceed the requirements of the drawings and specifications.

4. Submit performance curves of equipment such as engine generators, motor generators and uninterruptible power supplies.

G. Shop Drawings and Reports:

1. Identify with project name, number and item designation as indicated on drawings. Reference to applicable paragraphs of the specification.

2. Submit legible reproducible transparency and two prints minimum for Architect's record. Make necessary prints of reviewed transparency for distribution. If reproducible is not available, submit a minimum of six copies of catalog cuts.

3. Prior to submission, check all shop drawings for conformance with requirements of latest issue of the drawings and specifications, including bulletins and change orders, and against available space. Obtain public utility company approval of service metering and indicate on shop drawing. Have motor control centers reviewed by respective mechanical trades for motor size and control coordination. Have submittals signed by all reviewing parties. Make required corrections before forwarding to the Architect for review.

4. Include dimensional data, weights, ratings, construction details, center of gravity, component descriptive data and sufficient information to illustrate compliance with the specifications. List labeling and approving agencies and standards of design employed in manufacture.

H. Required Submittals: Submit shop drawings and technical data on all equipment and auxiliary systems in sufficient detail to indicate conformance with the drawings and specifications, including but not limited to:

1. Switchboards and metering facilities, including data on all components used in gear.

2. Distribution boards, branch circuit panelboards, terminal cabinets.

3. Installation drawings.

4. Life safety fire alarm, signal and communication systems components, wiring diagrams, conduit and outlet diagrams, system function description.

5. Catalog cuts of interior and exterior lighting fixtures, shop drawings of custom fixtures. Include finish data, socket specifications, metal gauge, diffuser specifications, independent test laboratory photo metric data, agency labeling, weight, suspension system details. Indicate compliance with general and specific specification requirements, ballast specification and coordination with ceiling system construction.

6. Transformers, including test data.

7. Motor control assemblies, components, construction details, internal wiring diagrams, interlocking diagrams. Variable frequency drives. Obtain mechanical trade information and approval prior to submission.

8. Emergency systems, wiring and interwiring diagrams.

9. Wiring devices, all types and ratings.

10. Control devices, controllers.

11. Occupancy sensors.

12. Low voltage lighting control system.

1.07 INSTALLATION DRAWINGS

A. Prepare dimensionally accurate floor plans of each electrical and signal room and/or closet, fire control room and the like, drawn to 1/4" scale minimum. Submit legible reproducible transparencies for review with two prints for Architect's record. Indicate all equipment within the rooms to scale based on shop drawing data, include structural support for suspended equipment and description of seismic bracing and fastening. Indicate system and equipment grounding details as applicable. Review elevator machine room shop drawings and coordinate location of electrical gear to maintain clearances. Submit with shop drawings.

B. Where conduit runs, 2" trade size and larger, are run in exposed locations, prepare dimensionally accurate floor plans indicating routing, coordinated with work of other trades and the structure. Submit legible reproducible transparencies with two prints for review.

1.08 RECORD DRAWINGS

A. Record of Job Progress: Provide and maintain in good order a complete legible set of blue line electrical contract drawings available at the site for inspection. Keep an accurate dimensional record of installed locations and all job changes, including source and date of authorization.

B. Record of Installation: At the conclusion of the work, purchase from the Architect a set of electronic (Auto Cad) files of electrical drawings and have incorporated by a competent CAD operator all installed data in a clearly legible manner utilizing contract drawing symbols and notations.

C. Include in Record Drawings the Following:

1. Corrected panel schedules indicating installed condition. Installed typed schedules reflecting installed conditions in panels.

2. Revisions, including sketches, bulletins, change orders, written addenda and directives, clarifications and responses generated by requests for information (RFIs), regardless of source of the revision.

3. Physical routing of feeders and conduits 2" trade size and larger, underground, exposed and above ceilings.

4. Location of underground conduit below building and on exterior, and stubouts dimensioned from building structure.

5. Location of floor mounted outlets, dimensioned from fixed building features.

1.09 SPARES, SPARE PARTS, SPECIAL TOOLS

A. Provide to Owner as specified in other paragraphs of the specification and as outlined herein.

B. Obtain receipts and include copy with Operating and Maintenance Instruction Manual(s).

C. Provide lists of each category describing type, rating and use and include lists with Operating and Maintenance Instruction Manual(s).

D. Breaker Lockout/Lockon Devices: One for each six panelboard circuit breakers or as noted, whichever is greater.

E. Receptacle Plugs: One for each receptacle excluding NEMA 5-15R and 5-20R types, unless otherwise noted.

F. Special Tools: Provide, as standard accessories, tools not readily available in commercial market required for assembly, adjustment and/or maintenance of equipment provided under this section.

G. Paint cans for touch up of factory finished gear, including switchboards, panelboards and the like. Label each can with identify of associated gear.

1.10 OPERATING AND MAINTENANCE DATA

A. General: As a condition for final acceptance of the system, submit to the Architect a minimum of three copies of each of the following documents, complete and at one time, in looseleaf three ring binders with permanent covers, identified, indexed and cross-referenced to the specifications. On the edge of the binder, identify the project, year of construction and equipment involved. Where practical, data may be combined in comprehensive manual.

B. Maintenance Instruction - Include:

1. Complete record material list.

2. Catalog brochures for all components.

3. Motor starter overload schedules.

4. Test reports.

5. Manufacturer's directions and conformance certificate.

6. Guarantee and warranties.

7. Inspection certificates.

8. Spare parts lists.

9. Reports on instruction of Owner's personnel.

10. Wiring and block diagrams, where applicable.

11. Detailed checkout procedures to insure operation of systems and gear.

12. Diagnostic and troubleshooting procedures for systems and major equipment.

13. Recommended preventive maintenance program, including a list of mechanical items requiring inspection and servicing.

C. Operation Instruction - Describe:

1. Start-up, checkout and shutdown procedures.

2. Emergency operation capability and procedures

3. Time switch operating schedule.

D. Shop Drawings - Include: Complete set of record shop drawings, cuts and brochures.

1.11 VERBAL INSTRUCTIONS

A. Upon completion of the work, provide an engineer from each supplier of major equipment or system to instruct Owner's designated operating personnel using the Operating and Maintenance data. Include both classroom instruction and on-the-job training, conducted before and during the system test period. Provide instruction proportional to the complexity of the system, but not less than one day.

B. Submit written report to Owner with copy to Architect, for each instruction period indicating date and time of instruction, and personnel being instructed and signed by personnel participating.

1.12 INSPECTIONS

A. In addition to required service calls, make a minimum of two inspections accompanied by operating personnel, within the warranty period, at no expense to the Owner, to insure that all systems are maintained properly and in satisfactory operating condition.

B. Submit written reports to Owner with copy to Architect, signed by operating personnel witnessing inspection, and indicating inspection results.

1.13 COMPLETION

A. Before Final Review: The work hereunder will not be reviewed for final acceptance until Operating and Maintenance Data, Manufacturer's Literature, Identification, Warning Signs and Nameplates specified herein have been reviewed and/or properly posted in the building and final cleaning has been completed.

B. Before operating any equipment for demonstration or test, comply with manufacturer's preparation instructions.

C. Demonstration of Operations: When the installation is complete and required adjustments have been made, operate the systems for a period of one week. During this time demonstrate to the Owner's representative that systems are completed and operating and performing in conformance with these specifications.

1.14 GUARANTEES AND WARRANTIES

A. Comply with guarantee requirements of Division 01.

B. Guarantee all material, equipment and work for a period of one year (or greater where specified elsewhere) from written acceptance of the work, against defects of any kind, covering all parts.

C. Obtain guarantees and/or warranties for factory assembled equipment and include with Operation Instruction Manual.

D. In the event of failure of any work, equipment, or device during the life of the guarantee and at no cost to Owner, repair or replace the defective work and remove, replace or restore any parts of the structure or building which may be damaged as the direct result of the defective work or in the course of making the replacement of defective work materials.

1.15 PRELIMINARY OPERATION

A. The Owner reserves the right to operate portions of the electrical system on a preliminary basis without voiding the guarantee or relieving the Contractor of his responsibilities.

1.16 ALLOWANCES, UNIT PRICES, ALTERNATE

A. Allowances: Include quantity or dollar allowances where indicated on the drawings or elsewhere in the specifications, along with appropriate additional allowance for installation, overhead and profit.

B. Unit Prices: Submit a list of unit prices for adjustments in the scope of work where requested elsewhere in the specifications.

C. Alternates:

1. General: Submit with bid, along with associated cost adjustment, alternates requested herein or on the drawings and other alternates in accordance with terms of Division 1.

2. Architect reserves the right to reject alternate proposal.

PART 2 - PRODUCTS

2.01 GENERAL

A. Provide material and equipment of new and recent manufacture, currently UL labeled and/or listed for the specified use.

B. Where UL labeling is not available, provide certification by a Nationally Recognized Testing Laboratory (NRTL).

C. Use products of the same manufacture and type for each category of material and equipment.

2.02 RACEWAYS AND WIREWAYS

A. Rigid Conduit including Couplings, Locknuts, Nipples: Steel, hot-dipped galvanized inside and out after threading, galvanized, threaded malleable iron or steel fittings, notched locknuts with gripping teeth. Deliver with plastic thread protectors on exposed conduit threads.

B. Intermediate Metal Conduit including Couplings, Locknuts, Nipples: Steel, hot process galvanized outside, lacquered or enameled inside, galvanized threads, galvanized threaded malleable iron or steel fittings, notched locknuts with gripping teeth. Deliver with plastic thread protectors on exposed conduit threads.

C. Electric Metallic Tubing including Locknuts, Couplings and Connectors: Galvanized steel, lacquered or enameled interior; raintight gland ring compression type fittings, insulated throat connectors. Submit sample fittings for approval. Indenture fittings are unacceptable.

D. Flexible Conduit: Manufactured from single steel strip, galvanized on all four sides prior to fabrication, die cast twist-in connectors, UL listed for ground continuity. Reduced wall or aluminum flexible conduit is not acceptable.

E. Liquid Tight Flexible Conduit: Flexible galvanized steel core, with extruded polyvinyl chloride cover. Liquid tight insulated throat fittings to seal and ground conduit. Provide separate bond wire where integral ground conductor is not available.

F. Gutters and Wireways: Galvanized sheet steel, hinged covers, elbows and fittings without sharp edges or projections.

G. Nonmetallic Conduit: High impact 90°C polyvinyl chloride, Schedule 40 extruded to iron pipe sizes with factory spacers, couplings, bends and offsets. Plastic to plastic connections, tightly fitted and butted, cement welded utilizing tinted primer per ASTM F656 and heavy body, medium set cement per ASTM D2564, in accordance with manufacturer's directions. Plastic to metal connection with UL listed adapters. Bell endings are not acceptable.

2.03 FITTINGS, OUTLETS AND JUNCTION BOXES

A. Provide bright new stock, stored where continuously protected from the weather and as described herein.

B. Outlet Boxes and Covers: Steel, knockout type, with full access screw-on covers or plaster rings, hot-dipped, galvanized, with cadmium plated or galvanized machine screws.

C. Cast Outlet Boxes: Cast ferrous metal construction, galvanized, complete with threaded hubs for rigid conduit, number and location as required, and plugs in unused hubs; gasketed cast covers; cast device plates suitable for indicated device; meeting NEC requirement for bending and permitted number of conductors; in hazardous area, approved for the class of hazard.

D. Small Junction and Pull Boxes: As specified for outlet boxes.

E. Large Junction or Pull Boxes: Galvanized code gauge sheet steel construction, with full access screwed on covers and cadmium plated or galvanized machine screws; minimum size per the governing electrical code or as noted on the drawings, whichever is greater; barriers for required separation; special configurations, where determined from field measurements to surmount structural conditions; factory painted with gray enamel. For flush mounting, extend covers 3/4" beyond edge of boxes. Where used for cable support, brace box to support cable weight. For junction boxes larger than 36" in any dimension, provide 3/4" diameter steel pipe cable supports with flanged ends with continuous fiber insulating sleeve and bolted to box frame, spaced on 36" centers maximum. For cover dimensions 3 ft. x 4 ft. or larger, provide two piece covers equipped with handles.

F. Junction Boxes on Exterior or Where Exposed to Moisture (e.g., Tunnels, Pits, Mechanical Rooms): Edges welded and ground smooth, leaving interior fillets; galvanized after fabrication; gasketed covers; stainless steel screws; factory painted with gray enamel. Gaskets to be factor made of an approved type.

G. Floor Mounted Junction or Pull Boxes: Heavy wall cast iron with flanged lip; galvanized; gasketed, screwed-on, watertight coverplate; drilled and tapped conduit openings as required; minimum size 6" square by 4" deep.

H. Floor Boxes:

1. Fully adjustable before and after installation.

2. Watertight cast iron units in slabs on grade. Galvanized steel, concrete tight, in suspended slabs.

3. Minimum volume of 30 cubic inches but not less than required for the number of conductors indicated considering any devices installed.

4. Compatible with slab thickness.

5. 4" diameter nominal, heavy brass coverplate with combination 2" and 1" plugs, or cover compatible with device. Gasket between adjusting ring and box.

6. Conduit entrances as required, plug unused openings.

7. Ganged units with barriers for multiple outlets or special types where indicated.

8. Brass carpet flange in carpeted areas.

9. For junction box use, provide conduit elbow with flush brass coupling for extension above floor.

10. For flush mounted duplex outlets, provide brass cover with individual hinged caps.

11. For floor mounted outlets, provide monuments as specified under Paragraph titled "Wiring Devices".

I. Backboxes: Refer to Communication and Signal Sections of the specifications. Provide outlet boxes of dimensions and configuration required for devices and equipment specified therein. Verify with equipment supplier.

2.04 CONCRETE PULL BOXES

A. Precast Concrete Pull Boxes Outside Building, Branch Circuiting: Where not otherwise noted or detailed, provide bottomless units with reinforced bolt down concrete cover; outside dimensions 13" by 19" by 12" deep minimum; in traffic areas, provide bolt down traffic covers. Provide minimum 12" depth of crushed rock or pea gravel below boxes for drainage.

B. Pull Boxes Distribution:

1. Provide precast concrete pull boxes where indicated, 48" square by 48" deep minimum dimensions, depth as required, complete with pull irons on four sides, conduit entry provisions on four sides, 8" diameter x 5" deep dry sump, two cable racks per side, galvanized steel frame and two piece, bolt down, cast iron or steel cover. Traffic type in traffic areas. Provide end bells for all ducts.

2. Racks to be hot dipped galvanized, equipped with adjustable hooks and porcelain insulators as required to separate feeders or signal systems, and keep conductors off bottom.

3. Paint cover and frame with two coats of asphaltum paint.

4. Caulk between sections and coat exterior with waterproof compound.

5. Set pull boxes on 6" deep gravel or sand bed, flush with paving in paved areas with paving sloping away from pull boxes. In unpaved areas locate boxes so that runoff water will not drain to pull box, set cover 2" above finished grade and provide 6" thick by 12" wide concrete apron around box, sloping away from cover.

6. Alternate: Poured in place pull boxes of equivalent characteristics may be provided. Submit structural details and calculation for review.

7. Identification: Cast system designation in covers in 2" size letters as directed. Secondary power - ELECTRICAL. Communications systems - SIGNAL.

C. Hand Holes (Grounding): 10" round (I.D.) cast traffic box with cast iron or galvanized steel cover.

D. Submittals: Provide shop drawings. Include for pull boxes structural data, loading characteristics, accessories and boxes elevations of all sides, as constructed.

2.05 CONDUCTORS - 600V

A. GENERAL

1. Manufactured within eight (8) months of installation, of soft drawn copper of not less than 98 percent conductivity, conforming with ASTM Specification and NEC; 600V insulation unless specifically noted otherwise, of the type specified, standard American Wire Gauge (AWG) sizes.

2. Provide new conductors delivered to the site in original, unbroken packages, plainly marked or tagged with Underwriters' labels; size, type, insulation and voltage rating of the wire; name of manufacturing company and the trade name of the wire; date of manufacture.

B. Conductor Insulation:

1. XHHW-2, THHW/THWN in all locations.

2. For dry locations: XHHW, THHN/THWN. XHHW-2 in underfloor duct systems or electrified systems and below raised computer floors.

3. Connections to Recessed Fixtures from Remote Outlet in Wet Locations: XHHW-2, THWN-2.

4. Through Ballast Housings, and for Connections to Recessed Fixtures in Dry Locations: RHH, THHN, XHHW.

5. In Exposed Conduit on Roof or in Conduit Concealed under Roofing Material: MI (wet locations). Exception: Short conduit extensions (6' or less) to roof mounted equipment may be same as remainder of circuit.

6. For Communication and Signal Systems and for Control of Mechanical Equipment: THWN throughout unless otherwise specified herein or in other sections of the specifications.

7. For Pendants and Cords: Underwriters' Type SJ or SJO with ground wire, or as indicated.

8. On Load Side of Ground Fault Interrupter Circuit Breakers: Cross-linked polyethylene insulation with tape over conductors and dielectric constant of 3 or less. Submit cable data with shop drawings.

2.06 SWITCHBOARDS

A. GENERAL

1. Complete factory assembled, metal enclosed assembly with lifting means, consisting of the required number of 90" high (unless available headroom requires 78" height), self-supported, vertical sections, including pull and/or transition sections, bolted together to form a floorstanding assembly, front and rear aligned. Service and feeder termination suitable for bus or wire connections as indicated. Rated for 75°C feeder and circuit wiring. Ratings as indicated on the drawings.

2. Device handle heights not to exceed 6'-6" above working surface (per NEC) considering installation on a 3" high concrete base pad.

3. Rodent proof ventilation as required to maintain allowable temperature rise at rated capacity.

4. Interfacing of external bus and/or cable conductors and control wiring with all related equipment supplied herein, under other sections of the work, or by utility company.

5. All devices, controls, auxiliaries, and instrumentation, as indicated on the drawings and as required for the specified function, assembled, interwired and pretested, prior to shipment, at the manufacturer's plant.

6. Switching and protective devices with visible means of ON-OFF identification.

7. Minimum RMS symmetrical rating of switchboards to be 25,000A (240V) and 22,000A (480V) but not less than 10% above available. Smallest device rating not less than switchboard rating.

8. Where switchboard circuit breaker trip ratings do not exceed 70A power panelboards may be used.

9. Anti-turn (two bolt), solderless, copper saddle type incoming and outgoing feeder terminals per paragraph titled "Connectors and terminations, Line Voltage Conductors".

10. Verify top or bottom entry and instruct equipment supplier.

11. Switchboard and device settings and ratings to be based on available short circuit capacity.

12. Submittals to include voltage/current rating, short circuit rating of board and devices, overall dimensions, available conduit space, circuit schedule, circuit numbers, device rating and description, conductor ratings, one line diagram with circuits numbered, nameplate schedule, equipment weight, motor center and control panel internal and interconnecting wiring diagrams, certification of conformance.

13. Shop drawings, operation and maintenance data, identification and testing as described in Part I.

B. Construction:

1. 12 gauge minimum sheet steel, phosphatized, primed and factory finished ANSI 61, with removable, screwed on, pan type, side, top and rear access plates, capable of being moved into installation position without deformation or damage, and bolted directly to the floor without use of floor sills. Seismically braced and bolted.

2. Full height vertical wiring compartments with hinged pan type access doors, top and bottom wiring compartments, cadmium plated or galvanized hardware and captive screws.

3. Drain roof of front access gear to front of gear and freestanding gear to rear of gear. Do not trap water on roof of gear.

4. On exterior provide outdoor construction with fully accessible, gasketed weatherproof front doors with three point latch and lock. Include integral space heater and exhaust fan, each controlled by thermostat and energized fused control transformer. Design outgoing cable and/or bus connections to maintain weatherproof integrity of gear.

C. Bussing:

1. Flat copper bussing, silver plated at joints, mounted on high impact, nontracking insulators braced for available fault current. Label boards for required short circuit rating.

2. Compression type bolts at all bus joints using a combination of flat and spring type washers.

3. Unreduced, fully rated horizontal bus for length of board, arranged for future expansion, and rated not less than the main device. Incoming bus rated not less than the main device or sum of main devices.

4. Full height vertical bus in all sections. Switchboard vertical bus rating equal to sum of devices and spare devices served, but not less than two-thirds of the horizontal bus rating for two sections or one-half for three or more sections.

5. A-B-C bus arrangements throughout, left to right, top to bottom, and front to rear.

6. Bus assembly to maintain UL clearances without reliance on any insulating material.

7. Full length copper equipment ground bus 1/4" by 2" cross section secured and bonded to each section of board, with terminals for feeder ground connections.

8. Fully rated neutral bus insulated from ground for all grounded neutral boards with a removable neutral bus link.

9. Horizontal bus located not less than 8" from front panels and bottom of boards.

D. Features:

1. Ground fault protection on main breakers for 480V switchboards of 1,000A and greater and for feeder breakers where indicated, coordinated so that feeder breakers trip before main breakers. Omit ground fault protection for emergency systems and ahead of fire pumps.

2. Zero sequence type ground fault protectors. Relay, field adjustable from adjustable delay from 6 to 30 cycles. Solid-state circuitry to shunt trip breakers. Monitor panel on face of switchboard with READY pilot light, ground fault indicator, reset button, provisions for field test without service interruption and alarm contact. Associated high temperature control wiring, isolated with barriers. Alternately, integral with breaker where indicated or specified.

3. 480V switchboards containing relays, shunt trip breakers or devices requiring control voltage, to have control power source for relay supply, consisting of a current limiting circuit breaker connected to main bus, and 480V to 120V, 0.5 KVA minimum rating, control transformer with secondary fusing.

4. Spare devices for all switchboards and motor control centers as indicated on the drawings, but not less than one for each board containing eight or more feeder

devices and rated not less than the smallest feeder or branch device in the board.

5. Fully equipped spaces including bus extensions, drilling and tapping of busses, suitable dead plates, but less device connecting straps, as indicated, but not less than one per switchboard and not less than one for each six devices or fraction thereof, rated not less than the smallest feeder or branch device in the board.

6. Devices and wiring connected ahead of mains or energized from external sources to be isolated with barriers and identified.

7. NEMA Type 13 dust tight and oiltight, transformer push-to-test type indicating pilot lamps with lamps replaceable from exterior.

8. Metering as indicated or specified.

E. Wiring:

1. No. 14 AWG minimum, NEC switchboard type, terminated with spade lugs on screw stud type terminal blocks, on bakelite frame.

2. Color coding reserving white for neutral and green for equipment ground. Colored tape identification is equivalent to colored insulation. Conductors fanned, laced and identified with number strips.

3. Isolate wiring from external sources and identify.

F. Circuit Devices: Types as designated on the drawings and meeting the requirements of applicable paragraphs of the specifications, short circuit rating not less than switchboard rating. Provide for padlocking in OFF position.

G. Switchboards of 2,500A and Lower Rating with Breakers 1,000A or Less: NEMA Class I, drip proof, front accessible, switchboard construction with flush group mounted devices connected and removed and maintained from the front, suitable for mounting with back against the wall. Weatherproof on exterior.

H. Services Switchboards: Pull section for underground service. Main and utility company metering section. For services 800A and larger, provide for utility company KWH and KVAR metering. Terminations per utility company standards. Minimum 50,000A symmetrical short circuit rating but not less than that available. Voltmeter and ammeter. Distribution sections with devices as indicated. Main breakers approved for 100% of nameplate rating, mounted in the switchboard. Where multiple main breakers are provided, label each main breaker. In 480V switchboards provide zero sequence ground fault protected feeder breakers coordinated so that feeder breakers trip before main breaker.

I. Distribution Switchboards:

1. Floorstanding switchboards for more than six devices.

2. Floorstanding or wall mounted units of panelboard construction for six or less devices (including specified spares and/or spaces).

2.07 METERING:

A. Digital Metering:

1. Where indicated on the drawings, provide true RMS digital line metering and monitoring system consisting of a single microprocessor based unit capable of monitoring and displaying the following functions with the accuracy's indicated:

   a. AC phase amperes - 1%.
   b. AC phase to phase and phase to neutral voltage - 1%.
   c. Watts - 2%.
   d. VARS - 2%.
   e. Power factor - 4%.
   f. Frequency - 0.5%.
   g. Watthour - 2%.
   h. Watts demand, with 5, 10, 15 and 30 minute intervals - 2%.

2. Device to auto range between units, kilo-units and mega-units, provide the capability to communicate data over a twisted pair network, be UL recognized, CSA certified and meet ANSI Standard C37.90.

3. Input ranges to accommodate current transformers with ratios of 100/5 through 5000/5 amperes. Provide three external current transformers with ratios as indicated on the drawings, or sized for the metered line. Potential transformers, self-contained and fused. Ratios field settable with dip switches. Preset settings retained through power failure.

4. Pulse initiation on watthour pulse as programmed by the user at certain KWH rates.

5. Synchronous pulse contact for the demand window to provide for synchronizing time with the utility.

6. Self-protected from fault.

7. Updated data every 1.5 seconds.

8. Control power derived from the metered line.

9. Membrane type display screen with 6 digit display.

10. Capability of programming the protective relaying functions active or inactive.

2.08 PANELBOARDS

A. General Features:

1. Code gauge galvanized or galvannealed sheet steel cabinets, with corners lapped and welded or riveted, dead front, dead rear, front accessible.

2. Flush mounted in areas exposed to public view. Surface mounted in electrical, communication, mechanical and storage rooms.

3. Trim, portions of cabinet exposed to view and surface mounted cabinets to be factory phosphatized, primed and finished medium gray to match switchboards.

In painted walls where exposed to public view (e.g., corridors, offices), field paint trim to match wall as directed by Architect.

4. Full height unreduced copper bus, rigidly supported. Solderless, saddle type, copper lugs for connection per paragraph titled "Connections and Terminations, Line Voltage Conductors". Bus feeder sequence as for switchboards. Solid neutral bar for grounded systems. Lugs sized for feeders rated for 75°C wiring. Subbreakers, split bus, main lugs, main breaker, double lugs, voltage and current ratings, all as indicated on the drawings.

5. Minimum bus rating of 225A, except where 100A is specifically indicated, but not less than feeder protective device rating.

6. Main breakers, common trip, single handle, mounted vertically ahead of panel bus. Replacing of branch devices with main breaker is not acceptable, except for panels in motor control centers.

7. Copper equipment ground bus for termination of feeder and branch circuit grounding conductors.

8. Oversize gutters for feed through, where indicated or required, sized not less than five times the total cross-sectional area of the through feed cable and connectors in addition to required branch circuit gutter. Where double lugs are indicated ahead of main breakers, provide oversized can sufficient for connections.

9. Incorporate associated contractors, relays, etc., in separate control section of the panel behind separate door, either with common frame, or adjacent to breaker panel where space is available. Where push button or contactor bypass is required, mount on dead plate behind panel door so that no live parts are exposed.

10. Hinged lockable door covering all devices. Flush catch and cylinder lock. Vault handle on doors over 4' high. All panels and cabinets keyed alike. Provide two keys per panel and cabinet. Keys to match existing panelboards where adding to existing facility.

11. Raintight enclosures in damp locations.

12. Certify conformance with the specifications.

B. Lighting and Appliance Panelboards Additional Features:

1. Minimum size 20" wide by 5-3/4" deep, unless specifically indicated otherwise.

2. Index cardholder on inside of door with typewritten circuit schedules reflecting as-built circuiting, behind clear plastic cover on inside of door, metal sided.

3. Automatic circuit breakers, 1" wide nominal, molded case, trip free, quick-make, quick-break, thermal magnetic type, bolted to the bus, with handles clearly indicating size and tripped position, of size and arrangement as shown on schedules. Common internal trip for multi-pole breakers. Permanent factory installed metal circuit numbers on adjacent trim (including spaces), screwed or riveted to trim. Adhesively applied labels are not acceptable. Where indicated, or where used for switching, use UL listed SWD switching duty breakers.

4. Minimum panel interrupting rating of 10,000A below 150V to ground including main and subfeed breakers. 14,000A above 150V to ground, RMS symmetrical. Where panels are subject to higher short circuit current on the basis of series rated systems, provide nameplate describing the series rating characteristics, and submit substantiation.

5. Breaker handle padlocking devices for 277V circuit breakers serving electric discharge lamps, built integral with panel.

6. Circuit breakers with integral ground fault detectors serving circuits on the exterior or in wet locations, where indicated. Provide 1 or 2 pole units with ground trip setting at 30 mA.

7. Breaker lockout/lock on devices as specified under paragraph titled "Spares".

8. Isolate equipment ground bus where indicated to serve isolated ground receptacles.

C. Power Panelboards Additional Features:

1. All requirements of lighting panelboards, including doors.

2. Convertible type construction.

3. RMS symmetrical rating equal to interrupting capacity of smallest device but not less than 22,000A (240V) and 25,000A (480V).

4. Breaker ratings per paragraph titled "Circuit Breakers, Molded Case".

5. Device handle padlocking provision.

6. Minimum bus rating of 225A.

7. Minimum side wiring gutter width for branch wiring of 5" where largest device is 225A and 8" for larger devices.

8. Where number of devices requires use of more than one section, provide totally enclosed sections, each with full capacity bus, and double lugs for full capacity feeder connection between sections.

9. Equipped spaces as shown, but not less than one per board.

2.09 MAGNETIC MOTOR STARTERS (UNLESS OTHERWIDE INDICATED)

A. Full voltage, across-the-line, nonreversing, horsepower rated, size No. 1 minimum with three thermal bimetallic type overload relays, ambient compensated where starters are remote from motors, and with under voltage release. Overloads sized for actual motor nameplate data per manufacturer's recommendations. Provide list of motor nameplate data and associated overloads. Coil 120V rated and fused.

B. Arc extinguishing characteristics and silver to silver renewable contacts. Auxiliary contacts as required by wiring diagrams but not less than two normally open, field convertible. If not field convertible, provide additional normally closed contact.

C. Wiring points brought out to numbered terminals. Interlocked requirements, remote control, status indicated, per control sequence and/or wiring diagrams on mechanical and electrical drawings.

D. For 480V separately mounted starters or where control circuit is shown as energized from motor circuit conductors, provide individual control transformer with 480V primary and 120V secondary and with (2) primary and (1) secondary fuses, adequate for controls energized from transformer, but not less than:

Starter Size	Minimum Addition to Standard Transformer
1	+ 50 VA
2	+ 50 VA
3	+100 VA
4	+ 100 VA

E. Mount NEMA Type 13, dust tight and oiltight devices on starter face including manual reset button, red RUNNING push-to-test, transformer type pilot light, hand-off-automatic switch for automatically controlled motors and additional devices where indicated or scheduled. Two speed motor starters to have HIGH, LOW pilot lights.

F. Separately mounted combination starters to have magnetic motor starter and switch or circuit breaker (as indicated) in common enclosure behind door with bypassable door interlock, features as specified for components.

G. Magnetic starters for remote control of 120V motors to be mounted adjacent to panelboard from which they are supplied, or where indicated.

H. Enclosures to be NEMA type 12 dust tight for separately mounted units, NEMA Type 3R for weatherproof units.

2.10 MANUAL MOTOR STARTERS

A. Voltage as required, horsepower rated, padlockable, toggle operated, with pole and bimetallic overload heater for each ungrounded leg, ON, OFF and TRIPPED indication, integral RUNNING pilot light, flush mounted where practical.

B. Where located in motor control centers or panels, group in control section on dead plate assembly, with barriers between voltages.

C. Where used for motor disconnect switch, omit overloads and pilot light.

2.11 CONTACTORS AND RELAYS

A. For Magnetically Held Contactors: Resistive load and horsepower rated motor starters, less overload elements, applied per manufacturer's recommendations.

B. For Air Conditioning Systems or Motor Control: 600V, AC, 10A, heavy duty, industrial type relays, magnetically held contacts as indicated with minimum of one normally open and one normally closed contact, field convertible, "T" rated for tungsten lamps, continuous duty coils, visible contacts or indicator. Designation

C. For Line Switching of 120V Motors Automatically Controlled: Magnetic motor starters with integral hand-off-automatic switch and pilot light.

D. Where required by number of poles indicated, use multiple relays in parallel.

E. NEMA Type 12 enclosure for individually mounted units.

2.12 PHOTOELECTRIC CONTROL

A. Encapsulated, quick-response, cadmium sulfide photocell; supply voltage 105V-285V; turn-on at 2± 20% FC; turn-off 2.5 to 3.5 times turn-on level; heat sink; surge protected; fail-safe design; rated 1,800 VA HID and 1,000 W tungsten; mount to IEEE-NEMA locking receptacle in cast aluminum housing.

B. Use with double throw electrically held relays for operation of mechanically-held relays and contactors. Locate relay module in NEMA 3R enclosure on roof in conjunction with photocell, or adjacent to associated time switch.

2.13 SMOKE DETECTOR (ELEVATOR AND HVAC INTERFACE)

A. Provide detectors where not provided under Fire Alarm Section.

B. Approved by code enforcing authority for indicated use.

C. Photo electric type, solid sate micro processor LED visual alarm.

D. Self-contained, 120V, unit to provide signal to elevator control panel, motorized dampers, or HVAC control panels.

E. Auxiliary contacts, remote alarm, where indicated.

F. For duct detectors, provide a minimum or two auxiliary contacts, uniform detection sensitivity for air velocities between 300' to 3500' per minute, sample tubes, plug-in detector, and remote led indicator.

2.14 CIRCUIT BREAKERS

A. Provide ratings as indicated on the drawings and as specified herein. Do not utilize breakers scheduled to be phased out of production. Certify that breakers provided will have replacements available for a period of ten years.

B. Circuit Breakers, Molded Case:

1. Trip free, quick-make, quick-break, inverse time delay and instantaneous trip elements, handles clearly indicating rating and ON, OFF, or TRIPPED position, type and rating indicated and specified. Multi-pole breakers to be common trip with single molded handle. For nonautomatic units, omit trip.

2. Individually mounted breakers in NEMA Type 12 enclosures generally, and NEMA Type 3R for weatherproof units. NEMA Type 1 where flush mounting is indicated.

3. Padlocking provisions for breakers individually mounted and in switchboards, motor control center, and power panelboards.

4. All breakers to be labeled for 75°C wire including enclosure.

5. Interchangeable plugs designed to prevent tampering.

6. Breakers ahead of transformers to meet transformer manufacturer's recommendations regarding inrush current.

7. For switchboards, power panelboards, motor control centers (except as scheduled for small motors), provide single handle three pole units, unless otherwise indicated, UL labeled interrupting rating not less than the rating specified for the equipment, or the following, whichever is higher.

Breaker Trip Rating	**Minimum Frame**	**Minimum RMS Symmetrical**
15A to 60A	100A Molded Case	65,000A @ 240V 25,000A @ 480V
70A to 200A	225A Molded Case with Adjustable Magnetic Trip	65,000A @ 240V 25,000A @ 480V
225A to 500A	600A Electronic Trip Molded Case	65,000A @ 240V 35,000A @ 480V
600A to 700A	800A Electronic Trip Molded Case	65,000A @ 240V 50,000A @ 480V
800A to 1000A	1200A Electronic Trip Molded Case	65,000A @ 240V 50,000A @ 480 V

C. Electronic Trip Breakers:

1. Microprocessor based, 9 function, true RMS sensing design with sensing accuracy through the thirteenth harmonic.

2. Continuous rating determined by interchangeable (field replaceable) rating plug, sensor, and long-time pick-up switch. Anti-tampering rating plug seal.

3. Visual trip indication for ground fault.

4. Externally accessible test port.

5. Adjustable long time pick-up.

6. Adjustable short time delay simultaneously adjusting magnetic pick-up and time delay or adjustable short time pick-up with I^2T ramp.

7. Ground fault (where indicated or specified) with adjustable pick-up and delay and switchable I^2 T ramp.

8. Test probe receptacles to permit testing without exposing live parts. Provide one portable test kit in container suitable for storage, and obtain receipt. Submit shop drawing.

D. Remote Trip (Where Indicated): Include shunt trip with auxiliary contact to disconnect shunt coil from circuit with breaker in tripped position.

E. Settings: Coordinate settings of main circuit breakers with serving utility company equipment in accordance with the coordination study.

F. Current Limiting Breakers:

1. Provide current limiting breakers where indicated or required by indicated fault current.

2. In ratings as available, provide current limiting breakers meeting the specifications without the aid of fuses.

3. In larger sizes, provide breakers combining time delay thermal trip, instantaneous magnetic trip circuit breaker and current limiting fuse protection in a single housing, coordinated so that breaker trips within rated limit and fuse provides fault protection and protects downstream breakers, and with fuses accessible through switchboard face. Blowing of fuse to trip breaker.

4. Provide spare fuses per paragraph titled "Spares".

5. Submit technical data and UL listing substantiating that current limiting device protects downstream devices.

G. Circuit Breaker Terminals: Provide copper wiring terminals, saddle lug where available, per paragraph titled "Connections and Terminations, Line Voltage Conductors".

2.15 DISCONNECT SWITCHES

A. Heavy duty (HD) horsepower rated, quick-make, quick-break, safety type, externally operated, rating and number of poles required, capable of switching 10 times switch rating. Fused for branch circuit protection, and in elevator machine rooms, with UL rejection type clips. Nonfused for motor disconnect where indicated. Switch and enclosure to be labeled for 75° wire for fuse ratings 125A and larger.

B. Include bypassable interlock, padlock provisions, positive ON and OFF indications, molded case breaker mechanism or visible blades, single switch mechanism to preclude mechanical single phasing, solid neutral bar for four wire feeders, copper terminals, spring loaded clips with noncurrent carrying springs. Provide wiring terminals as specified under paragraph titled "Connectors and Terminations, Low voltage Conductors".

C. Enclosures to be NEMA Type 12 in interior dry locations, NEMA Type 3R on exterior and in wet locations.

D. Use manual motor starting switches for manual control and/or disconnecting of 120V fractional motors and for disconnecting of 3 phase motors up to 5HP at 230V and 10HP at 480V. Flush mounted in finished areas. NEMA 1 enclosure on interior, NEMA 3R on exterior.

E. For flush mounted disconnects, provide manual motor starting switches, or where indicated, nonautomatic circuit breakers with flanged trim.

F. For disconnects between variable speed starters and the motor served, for elevator disconnects, and where indicated, provide auxiliary contact to disconnect starter coil in OFF position. Auxiliary contact to open before disconnect.

2.16 FUSES, LOW VOLTAGE

A. NEC dimension, rejection type.

B. 600A and Smaller: Class RK1, low peak dual element with separate overload and short circuit elements.

C. Coordinate fuses with each other, and with circuit breakers which they are protecting.

D. Provide label inside each switch cover indicating specific type of fuse required for replacement.

E. Provide spare fuses per Paragraph titled "Spares".

2.17 TRANSFORMERS, DRY TYPE

A. UL listed, dry type, ratings as indicated, built per IEEE, ANSI, and NEMA Standards, utilizing Group III insulation, rated at 220°C (180°C for encapsulated type). Normal life expectancy and winding temperature rise not exceeding 150°C in a maximum ambient of 40°C, and an average ambient of 30°C, with continuous rated nameplate load connected to the secondary side, at rated voltage. ANSI 61 factory finish. TP-1 rated.

B. Minimum impedance of 4.25% for ratings over 100 KVA, indicated on nameplate.

C. Delta primary and wye secondary connections for three phase units.

D. Vibration dampness between core and case. Exterior lifting holes.

E. Two 2½ percent taps each, minimum, above and below normal for ratings above 5 KVA.

F. Terminals below, bottom and side conductor entrance. Temperature rise in terminal compartment suitable for 60°C or higher insulated conductors. Case temperature rise 35°C maximum at rated load.

G. Rodent proof bottom enclosures. Ventilating openings arranged to prevent contact with live parts. Weather shield on all ventilated units, for drip protection.

H. Use wall mounted epoxy encapsulated units, sealed against moisture, dust, and fumes, for 15 KVA and smaller units, and where indicated.

I. Braced per latest ANSI "Short Circuit Characteristics" specifications.

J. BIL Ratings: 600V class and below - 10KV.

K. Sound level to be 3 db below NEMA standards.

L. Provide anti-turn solderless, copper saddle type incoming and outgoing feeder terminals per paragraph titled "Connections and Terminations, Line Voltage Conductors".

M. Tests: Factory tests based on NEMA and ANSI reference temperatures. Submit certified test reports for duplicate units of each rating with shop drawings.

1. Applied voltage test to other winding and ground (600V class) of 4 KV primary and secondary for 30 KVA and larger, 4 KV primary, 2.5 KV secondary for 25 KVA and smaller.

2. Induced voltage at twice rated voltage.

3. Ratio and polarity.

4. Efficiency, impedances, losses.

5. Temperature rise.

6. Short circuit (latest ANSI Short Circuit Test Code).

N. Shielded Transformers:

1. Meet requirements for dry type transformers.

2. Incorporate electrostatic shield between primary and secondary windows, grounded to building ground in accordance with manufacturer's instructions.

3. Common mode noise attenuation of 120 db minimum.

4. Transverse mod noise attenuation of 30 db minimum.

O. Control Transformers:

1. Machine tool type designed for high inrush.

2. Temperature rise below 55C at continuous rated full load.

3. Terminal board construction.

4. Secondary fuse blocks.

5. Rating not less than indicated or specified but adequate for inrush currents of connected control devices.

2.18 WIRING

A. General:

1. Specification grade.

2. General Use: Ivory color (as available) unless otherwise noted or specified.

3. Emergency Standby: Red color (refer to Paragraph titled "Identification and Warning Signs").

4. Screw type terminals on all devices, suitable for up to No. 10 solid copper conductors.

5. Where not specified herein, provide configuration as indicated on drawings.

B. Toggle Switches:

1. Flush tumbler, AC type, insulated base, completely enclosed.

2. 20A, tungsten load rated, at 277V.

3. 1 pole, 2 pole, 3-wayor key operated as indicated on drawings. Symbols: S, S_2 S_3, S3, S_4, 2 pole unit usable for (2) 120V circuits or (1) 208V Circuit.

4. Thermal overload switch, rated 1 HP at 120V. Refer to paragraph titled "Manual Motor Starters". Symbol: S_m.

5. Momentary type, three position, single pole, double throw, two circuit, spring return to center OFF position. Symbol: S_R.

C. Pilot Lights (Lighting Control): Flush neon type with lucite jewel suitable for use in switch plate opening, ganged on plate with associated switch, 120V or 277V as required, red jewel on emergency systems, green jewel on normal systems, lighted in the ON position unless otherwise noted. Symbol: S_P.

D. Receptacles:

1. General: Number of poles and ampere rating as shown on drawings and of NEMA standard configurations. Ground pole connected to circuit grounding conductor.

2. Duplex Convenience Receptacles: 15A, 125V; grounding third pole; side wired for 2 wire circuit use. Where 2 circuits are indicated, provide individual circuit for each half. NEMA 5-15R. 20A, NEMA 5-20R for dedicated circuit outlets.

3. Clock Receptacles for Surface Clocks (Non Central Systems): Flush type with recessed grounding receptacle and clock support hanger with removable stainless steel plate, NEMA 5-15R. For recessed clocks, install back box furnished by clock supplier.

4. Duplex Receptacles in Floor Boxes: Standard device behind special plate described under floor boxes. NEMA 5-15R.

5. Duplex Receptacles on Floor Boxes: Standard device in horizontal cast aluminum floor fitting, with blank plate and weatherproof flex connection to furniture, 18" length minimum.

6. Ground Fault Interrupting (GFI) Receptacles: NEMA 5-15R duplex receptacle with integral ground fault protection and lift cover.

7. Isolated Ground (IG) Receptacles: NEMA 5-15R duplex isolated ground receptacle with surge suppression line to ground, line to neutral and neutral to ground, light and alarm.

8. Weatherproof Receptacles, Flush Mounting: NEMA 5-15R duplex GFI outlet in single gang extension with gasketed cast aluminum lift cover.

9. Weatherproof Receptacles, Freestanding: NEMA 5-15R duplex GFI outlet mounted in cast box, stub mounted, with gasketed cast aluminum lift cover. Provide plugged hubs in box sides for extension.

10. Special Receptacles: Letter designation appears adjacent to special receptacle symbol. Simplex unless otherwise noted. Refer to schedule on drawings.

E. Motor Control (For Magnetic Starters and Individual Mounting):

1. Push Buttons, Selector Switches. Oiltight for starter and contactor control, 10A tungsten lamp rated, miniature type.

2. Pilot Lights: Oiltight, push-to-test, miniature, transformer type.

F. Wall Plates:

1. Device plates of one make and design for all outlets, smooth, satin finish, Type 302, stainless steel, beveled edges, to fit device.

2. Galvanized pressed steel plates, to conform with box and device.

3. For Exterior Locations: Cast aluminum lift cover rain tight while in use unless otherwise indicated.

4. Voice/data system plates by system supplier unless otherwise noted.

5. Engrave plates as described under other paragraphs.

G. Telephone and Signal Systems:

1. Telephone, Data, and Signal Outlet on wall Box: Single gang box with blank cover plate UON.

2. Telephone, Data, and signal outlet in Floor Box: Two gang box with blank cover plate UON.

2.19 LOW VOLTAGE SIGNALS (WHERE NOT OTHERWISE NOTED)

A. Control Transformer: 40 VA minimum, at 16V and 24V, integral self-restoring circuit breaker, 120V primary, install in flush mounted outlet box unless otherwise noted.

B. Push Button: Quick-make and break, momentary, flush outlet box mounting, with integral plate.

C. Foot Operated Alarm: Foot rail with SPDT switch, key operated reset switch, alarm indicator, toe operated. Cord connect to junction box. Locate as directed.

2.20 LIGHTING FIXTURES, GENERAL

A. Provide complete lighting system, wired, assembled and operable, including lighting equipment and accessories as shown on the drawings, described in the fixture schedules, specified herein and covered by allowance. Accessories include canopies, suspension of proper lengths, hickeys, castings, sockets, holders, reflectors, ballasts, diffusing material, louvers, plaster and mounting frames, lamps, recessing boxes, supporting brackets and channels, where required to span structural members.

B. Fixtures to be factory prewired and preassembled. Catalog numbers are given for manufacturers' identification. Conform to written descriptive requirements governing material and fabrication, either in the general or specific sections. Where catalog

numbers are indicated as modified, no modification will be required if the standard unit fully conforms to all descriptive requirements in the specifications and conforms with specified ceiling construction. Fixtures to be UL labeled for location and operating conditions indicated.

C. Fixtures of the same type to be of one manufacturer and of identical finish and appearance. Where not identified on drawings, provide same type as indicated in similar locations.

D. For recessed fixtures, provide frame and trim compatible with ceiling type and construction. Refer to ceiling specifications and architectural drawings to determine types. For fixtures recessed in concrete, provide galvanized steel housing with bitumastic finish approved for the purpose.

E. Provide adequate lamp shielding, proper ventilation and heat dissipation.

F. Secure diffusers to trim by devices not requiring tools for removal, or for relamping. Provide safety chain attachment to fixture housing for portions of fixtures which are removed for servicing relamping.

G. Provide shop drawings for custom and modified standard fixtures, and catalog cuts illustrating conformance with specifications for standard fixtures. Drawings to indicate materials, assembly, and finish. Coordinate fixture type with ceiling supplier and submit fixture compatible with ceiling system.

1. Include dimensions of the assembled fixture, weight, ballast characteristics, description of lens or diffuser material and finish, socket specifications, frame, housing, reflector, special accessories, recommended lamps and list of agencies which have labeled the fixture. Indicate the number and type of wires for which fixture with attached junction box has been approved. Indicate conformance with temperature rating requirements of specifications.

2. Provide (for types in quantity of 30 or more) photometric report from an recognized testing laboratory equal to the standard report furnished by E.T.L., including candlepower distribution curves and tables, luminaire brightness readings, tabulation of coefficients of utilization and percent efficiency, and a description of the unit and test conditions.

H. Before ordering the specified lighting fixtures (for quantities of 30 or more), make available to the Owner's representative, on request, samples for his final approval. These samples may be on display at local distributor or manufacturer's showroom. The Owner reserves the right to change the fixture selection at no additional cost to himself except for actual fixture cost difference. Provide credit if fixture cost is less.

I. General Constructions:

1. Sheet Metal: Free of tool marks and dents. Painted after punching and forming to eliminate exposed unpainted edges. Intersections and joints formed true, sufficiently rigid to prevent distortion after assembly.

2. Castings: Free of blemishes, scale and rust, and finished smooth.

3. Aluminum Surfaces, Nonreflecting: Anodized clear or with color as indicated. Castings to be irradiated, sandblasted or anodized.

4. Aluminum Reflectors: Treat with alzak process to provide permanent reflective surface of 85% minimum. Extruded reflectors to be unscored, bright dipped and clear anodized.

J. Lighting Fixture Description: Refer to schedule on drawings or in specifications and to General Requirements in other paragraphs herein for full fixture description.

K. Provide only UL listed lighting fixtures. This applies to custom fixtures, as well as manufacturers' standard fixtures that are modified.

L. All exterior lighting fixtures to be UL listed for damp or wet locations, whichever applies. Damp locations are defined as exterior protected locations. Wet locations, completely exposed to the weather.

M. Submit a production sample of all custom and modified lighting fixtures to the Architect for review.

2.21 FLUORESCENT FIXTURE BALLASTS

A. General:

1. Provide ballast of proper type and voltage for each lighting fixture as scheduled on the drawings or in other paragraphs of the specifications, and meeting requirements herein.

2. Provide electronic ballasts throughout. Electromagnetic (core and coil) type, may be used only where electronic type are not available or not applicable.

3. Codes and Standards (Minimum):

a. American National Standards Institute (ANSI).

b. California Electrical Code.

c. California Energy Commission (CEC).

d. Certified Ballast manufacturers (CBM).

e. Electrical testing Laboratories (ETL).

f. Energy Policy and Conservation Act (EPCA), National Energy Conservation Amendments (NAECA).

g. Federal Communications Commission (FCC) regulations Part 18 and National Electrical manufacturers Association (NEMA) limits for Electromagnetic Interference (EMI and Radio Frequency Interference (RFI).

h. Underwriters laboratories, Inc. (UL) labeling and/or listing.

4. Sound rating of "A".

5. UL Class P rated, without any components containing PCB.

6. Fuse on each ballast serving 36" or 48" lamps, rated per manufacturer's recommendation.

7. Rated 50°F minimum for fixtures on interior. Rate 0°F minimum for fixtures on exterior, in parking garages and in refrigerated spaces.

8. HPF throughout including for compact lamps.

9. Equip each fixture with (1) or (2) electronic ballasts as required. For continuous row single lamp fixtures, use common ballast for adjacent fixtures as practical. Three and four lamp ballasts are not acceptable unless specifically indicated.

10. Where indicated or specified, provide radio frequency suppressor for each fixture. Where ballasts in fixture are supplied from separate conductors, provide separate suppressor for each ballast.

11. Ballast to provide normal rated life for specified lamp.

12. Start lamps in Rapid Start mode.

13. Where ballasts are located remote from fixture, install in lockable, sheet steel, ventilated enclosure, keyed alike with branch circuit panelboards. Space ballasts not closer than manufacturer's recommendation. Verify maximum allowable distance of ballasts from fixtures.

14. Physically interchangeable with electromagnetic ballasts in new or existing fixtures.

15. Operate lamps at frequencies between 25 and 40 KHz from 60 Hz input source with less than 10% flicker, at ambient temperature of 50°F to 105°F with 60°C maximum case temperature during operation.

16. Maximum light regulation ± 5% with ± 10% input voltage variation.

17. Suitable for operation of F17T8, F25T8 and F32T8, one two or three lamps, types as indicated or specified, design for optimum operation of the specified lamps.

18. Solid-state consisting of rectifier, high frequency inverter, power control and regulation circuitry, in steel case, marked with manufacturer's name, part number, supply voltage, sound rating, power factor, open circuit voltage, RMS current draw, input watts, starting current, crest factor, efficiency and UL listing.

19. Ballast life to be unaffected by lamp failure.

20. Minimum ballast factor of 95%.

21. Maximum current crest factor of 1.7.

22. Maximum total harmonic distortion of 10%.

23. Minimum power factor of 90%.

24. Withstand line transients per IEEE 587, Category A.

25. Rated life of 30,000 hours based on 10 hours per day.

26. Submit with shop drawings a certified test report from an independent test laboratory illustrating conformance with specified requirements.

27. Submit evidence with shop drawings from ballast supplier of three projects of significant magnitude, employing the proposed ballasts, in satisfactory operation for a minimum of one year. Identify projects, operating personnel familiar with the ballast performance, and frequency of ballast failure.

28. Provide extended guarantee as described under Section 16000, Guarantee and Warranties.

B. Electromagnetic Ballasts, Additional Requirements:

1. Minimum power factor of 95%.

2. Usable with normal or energy saving lamps.

3. Maximum Input Watts with Full Light Output:

a. Two lamp 32W T8 lamps, 277V = 71 $\pm$ 5%.

C. Dimming Ballasts:

1. Meet all applicable requirements for electronic ballasts.

2. Approved for use with dimming system as furnished.

3. Provide dimming with low end of five percent light output, with consistent power output for indicated lengths and quantities of lamps.

4. Provide specified dimming level uniformly through all lamps, without flicker or striations.

5. Provide soft-start at levels set at dimmer control.

2.22 EMERGENCY POWER BATTERY PACK

A. Provide where called for in the lighting fixture descriptions.

B. Consisting of a high temperature nickel cadmium battery, battery, battery charger, all solid state circuitry, in one enclosure.

C. Include charging indicator light and test switch.

D. Capable of operating with one or two lamp electronic ballasts to illuminate one T8 lamp for a minimum of 90 minutes, producing 1400 lumens minimum of initial emergency lighting.

E. UL listed.

F. Five year warranty

2.23 EMERGENCY POWER SUPPLY SYSTEM

A. Provide where indicated on drawings emergency power supply for emergency egress lighting, (UL 924). KVA capacity as indicated on drawings

B. System shall have the following features:

1. Input: 277/480 volt or 277 volt as indicated; ±10% voltage; 60 Hz

2. Output: 277/480 volt or 277 volt as indicated; 60 Hz ± 0.5Hz; ± 4% voltage regulation; 10% maximum THD; 20 ampere circuit breakers as required.

3. Continuous power supply suitable for HID type lighting fixtures.

4. 90% efficiency

5. Seal lead acid battery. (Minimum 90 minute power supply at full output)

6. 24 hour recharge time with continuous float charge.

C. Manufactures: Meyers;; Dual/Lite – Spectron ILS; Lithonia – Power systems FT

2.24 FLUORESCENT FIXTURE

A. Temperature Rating:

1. Design fixtures to limit ballast case temperature installed in fixtures to applicable UL Standards.

2. Conform with Guarantee Requirements.

B. Fixture Construction:

1. Lampholders: Bipin type. Permitting full entry of lamp pins in a vertical plane, after which entry, a 90° rotation shall properly seat the lamp. Corrosion-resistant "edge-wipe" type lamp pin contacts.

2. Lampholders, Electronic Ballasts: Suitable for frequencies employed, meeting recommendation of the ballast manufacturer.

3. Lampholder Fastening: Securely fastened to brackets or socket straps in manner to eliminate flexing under normal lamp pressure. Replaceable without removing fixture from the installation. Backed by fixture housing or end plate to prevent twisting.

4. Ballast: Fasten directly to metal fixture housing at three points, using captive bolts or screws, or equivalent method.

5. Housings and Bodies Recessed Troffers: Fabricated of die-formed, cold-rolled steel not less than 20 U.S. gauge welded into a one-piece assembly using lap seam construction. Breaks, bends, edges, holes and knockouts accomplished by die-forming and machine operation. Alternately, fabricated of extruded aluminum sections or die-formed from aluminum sheet of not less than No. 16 B and S gauge aluminum, with sections positively interlocked to provide a rigid unit. A complete die-formed housing of 22U. S. gauge steel will be acceptable providing the unit is ribbed, embossed or paneled with a minimum of four cross ribs so as to be equivalent in strength to the above specified.

a. Provide wiring and ballast compartment accessible when the fixture is in the installed position. Wiring secured by clips or clamps to the body of the fixture, with the cover removed.

b. For troffers in suspended ceilings, in addition to seismic suspension, provide four clips attached to fixtures to positively tie fixture to T-bar or ceiling channel suspension. In plaster and dry wall ceilings, provide all necessary framing, support and hardware.

6. Finish: Finish visible fixture trim in color designated on drawings, or baked white enamel where not otherwise noted. Rustproof metal parts. Provide enamel where not otherwise noted. Rustproof metal parts. Provide enamel finish, baked-on at a minimum temperature of 300°F. Enamel reflective surface to have 87 percent reflectivity, minimum.

7. Diffusers and Lenses: Provide types indicated on fixture schedules and as specified herein.

8. Lenses: Flat lens designed to direct light down and present low surface brightness within normal viewing angles; high molecular weight virgin acrylic plastic; smooth on one side, uniform pattern of male cones or hexagonal prisms on the other, 3/16" outside dimensions. Special types where noted on fixture schedule.

9. Translucent Diffusers (Where not Otherwise Indicated): Flat cast (not extruded), translucent white, virgin acrylic with matte finish; 1/8" thick up to 2' width; 3/16" thick for 3' and 4' width; crown of sufficient height to prevent sag below horizontal. Fixture depth to accommodate diffuser crown without objectionable lamp image.

10. Doors: For troffers, unless otherwise specified, provide separable, hinged door constructed of extruded aluminum, with mitered corners, secured in place by inconspicuous spring loaded, visible, finger operated catches, removable without tools, but hinged to preclude accidental dislodgment in the open position. Incorporate light trap between door and fixture. Retain lens firmly in door with clips or equivalent, but allowing for lens replacement without special tools.

11. Fixture Wiring: Wire with 600V, 105°C rated, thermoplastic insulation. Interconnect between sockets and ballasts, and provide 12" minimum length pigtails. Provide two wire pigtail for single circuit connection, four wire for two circuit connection where two neutrals are shown on drawings. Where fixture is served from two sources, barrier wiring from emergency source as required and provide notation inside fixture indicating "supplied from two sources".

12. Recessed Fixture Connection: Connect to fixture outlet, with 6' length maximum of flexible conduit with conductors insulated for rated fixture operating temperature.

13. Recessed Downlights: Provide mounting frame with high power factor ballast and an attached prewired junction box, rated for through wiring with 60°C conductors, designed for installation without installing trim, diffusers or lens. Verify suitability of attached junction boxes for number of conductors indicated on drawings, provide additional boxes where attached junction box capacity is exceeded.

14. Fixture Testing: Test production run unit for fluorescent troffers furnished in quantities in excess of 100 units in presence of Owner's representative. Place fixture face down on flat surface with lamps installed but without diffuser. Raise one corner until the second corner clears the surface, without dropping lamp or damaging lamp holder. Repeat test with diffuser in place. Door shall not come unlatched and no permanent set shall occur in fixture. Submit test report.

C. For fluorescent fixture specified to be chain hung, provide machine type steel chain, closed welded links, hot-dipped galvanized finish, 750 lb. rated tensile strength, weighing approximately 13 lbs/100 feet, capable of supporting fixture weights of 30 to 60 lbs.

2.25 HIGH INTENSITY DISCHARGE FIXTURES

A. Provide porcelain, screw type mogul sockets with nickel plated brass shells, silicone prelubricated, UL listed at 600V, 1500 watts, securely fastened to fixture body to prevent twisting or rocking of socket when lamping or relamping. For pendant units, provide balanced construction for use on swivel hanger.

B. For interior use, where not otherwise specified, provide integral constant wattage, "B" sound rated, fluorescent style ballasts, meeting requirements for fluorescent fixture ballasts, and including automatic resetting thermal protector and fuse. Use encased and potted type where fluorescent style is not available.

C. For exterior use, where not otherwise specified, provide integral constant wattage, weatherproof, minus 20°F rated, high power factor ballasts complete with automotive type fuses in plastic fuse holders, wired into primary circuit. Where specified, provide integral luminaire construction, utilizing core and coil units, to provide same performance.

D. Where fixtures are indicated to be connected to emergency circuits, provide a standby quartz iodine lamp for temporary illumination until HID lamp restrikes.

E. Conform with ballast guarantee requirements.

F. Provide ballast compatible with specified lamps and so certify.

2.26 CUSTOM LIGHTING FIXTURES

A. Subject to same construction and finishing requirements specified for standard fixtures.

B. Fixtures to bear UL label at time of delivery to the project site.

2.27 EXTERIOR, FLOODLIGHTING AND DECORATIVE STANDARDS ADDITIONAL REQUIREMENTS:

A. Complete installation including poles, anchor bolts, luminaries, lamps, ballasts, wiring as detailed and/or specified, mounted on reinforced concrete bases.

B. UL wet location label on fixtures on exterior or in wet locations.

C. Exterior pendant or pole mounted fixtures to withstand minimum lateral load of thirty pounds per square foot of exposed surface. Certify conformance on shop drawings.

D. Poles for exterior fixtures to be round tapered steel (unless otherwise detailed or specified), 11 gauge minimum, height as indicated, with welded steel baseplate, four galvanized anchor bolts, eight nuts and washers and hand hole with cover. Poles to be galvanized and field painted to match fixture. Painting to conform with PAINTING section of specification.

E. Stainless steel or nonferrous hardware throughout on exterior fixtures.

F. Grounding lugs on pole mounted fixtures.

G. Acrylic diffusers on exterior of high heat resistance type. When used with H.I.D. lamps include an ultraviolet absorber to limit yellowing index change to plus 0.5 after 4000 hours exposure to 400 watt lamp.

H. For poles exceeding 25 feet in height, provide structural calculations to enforcing authority and obtain approval.

2.28 LAMPS

A. General: Unless specified otherwise herein, furnish and install lamps for each fixture of type and wattage indicated on drawings or other section of the specification, compatible with specified ballast. For fixtures on exterior or in cold locations, use lamps suitable for 0°F start. Refer to paragraph titled "Spares". Lamps to be as follows where not otherwise specified.

B. Fluorescent Lamps (minimum Values):

1. General: Rapid start, suitable for operation with electronic ballasts UON, 3500K, RE 835.

2. T8 Lamps: 20,000 hour life; CRI 84; 17 watts, 1,375 lumens for 24" lamps; 25 watts, 2,200 lumens for 36" lamps; 32 watts, 2,950 lumens for 48" lamps.

3. Compact Lamps: Four pin (UON): CRI 82; 10,000 hour life; 9 watts, 600 lumens; 13 watts, 900 lumens; 18 watts, 1,200 lumens; 26 watts, 1,800 lumens; 32 watts, 2,400 Lumens; 42 watts, 3,200 lumens lengths per fixture requirements..

C. Incandescent Lamps: Inside frosted or as recommended by fixture manufacturer, 130V rated.

D. Metal Halide: Phosphor coated, unless otherwise noted, universal burning type, used with compatible ballasts in enclosed fixtures. Breaking of outer glass to disconnect supply to arc tube. CRI 70 minimum.

Watt	Base	Initial Lumens	Life Hours	Comment
100	E 17	7,900	10,000	Enclosed Fixture
175	BT 28	14,000	10,000	Enclosed Fixture
250	BT 28	20,500	10,000	Enclosed Fixture

2.29 OCCUPANCY SENSORS

A. Provide California Energy Commission approved, UL listed, passive infrared occupancy sensors in individual rooms, at locations, at locations indicated on drawings.

B. Passive infrared Wall Sensor:

1. Automatic on-off control of lighting loads in rooms as indicated. Rated for both incandescent and fluorescent lighting. Up to 600 VA at 120V and up to 1200 VA at 277V with zero minimum. Capable of switching electronic fluorescent ballasts.

2. Horizontal field of view; minimum 170° x 15 feet for hand motion.

3. Two position switch; automatic mode, and override of the automatic mode to turn lighting off even if room is occupied.

4. Delayed automatic "off" (time-out) adjustable from minimum of 1 minute to a maximum of 20 minutes. Movement in the room during the time-out period to reset the time delay.

5. An ambient light override that may be set so that when sufficient ambient light (daylight) is present, the lighting will not turn on. Adjustable from full daylight to less than 40 foot-candles.

6. Ivory (unless otherwise noted) injection molded thermoplastic device body for mounting on a single gang plaster ring, with stainless steel GFI style (rectangular opening) plate.

7. Two year manufacturer's warranty.

C. Ultrasonic Ceiling Sensor:

1. Automatic on-off control of lighting loads in rooms as indicated. Unit complete with low voltage power supply, relay for switching multiple circuits with local manual switches single or multiple sensors in opposite directions as indicated on drawings.

2. Each sensor to have a field of range minimum of 25' x 25' for hand motion. Multiple sensors to double the range. Transmitter and receivers angled 30° down form horizontal.

3. Sensor to have on-auto switch, adjustable time delay between 1-20 minutes, adjustable sensitivity and normally closed relay to leave lights on sensors failure.

4. Housing made of rugged high impact injected molded plastic colored white.

5. Two year manufacturer's warranty.

2.30 DIMMERS: Rating as indicated on the drawings conforming with the following:

A. For control of individual or small groups of circuits, provide complete assembly including dimmer, ON-OFF switch, and secondary circuit protection where more than one circuit is indicated to be supplied from one dimmer. Ratings as indicated on the drawings.

B. Individual Dimmers: UL labeled, 120V, 60 Hz, solid-state type, integral ON-OFF switch, flush mounting back box with satin finish stainless steel plate.

C. Certify, per California Title 24, that dimmers will provide flicker free operation throughout dimming range without causing premature lamp failure.

2.31 LIGHT TRACT

A. Provide system of wiring, outlets, light tract, supports, fittings, lighting fixtures and lamps as indicated on the drawings. Track lighting fixtures and track to be of one manufacture. Install fixtures where indicated or, where quantities are specified, as directed. Aim adjustable units to the satisfaction of the Architect.

B. Track to be surface type, or recessed where indicated. For pendant mounting, use stems on 4' centers.

C. Tract to be of extruded aluminum channel with solid copper line, neutral and ground conductors encased in rigid plastic insulators, rated 20A. Top portion to be raceway with capacity of six No. 12 AWG feed through conductors, or alternately, run feed through wiring in conduit above ceiling. Provide finish per Architect's requirement.

D. Fixtures to be equipped with polarized track adapter. Where individually mounted track light fixtures are indicated, provide outlet and outlet box canopy adapter.

E. Where indicated, provide two circuit tracks with neutral, ground and two line conductors. Balance fixtures on two line conductors.

2.32 LOW VOLTAGE SWITCHING/LIGHTING CONTROL SYSTEM

A. General:

1. Provide a complete and operable programmable system for low voltage remote control including self contained microcomputer controller with built-in keyboard, display LCD, data link, power supply, output modules and relays adjacent to lighting panels, data lines between photocells, switches and other transceiver or remote relay panels, extension of branch circuits to relays, control source in each panel and to control relays in each cabinet and to lighting panel circuit breakers. It shall be fully programmable on relay by a relay basis.

2. The system shall include but not limited to:

a. Low voltage momentary or maintained contact master or local override switches.

b. Local mounted key-pads.

c. Low voltage 20 Amp latching relays.

d. Control transformers.

e. Control programmable stand-alone panel processor.

f. Remote relay cabinets.

B. SUBMITTALS

1. Submit manufacture's data on lighting control system and components.

2. Drawings shall include but not be limited to riser diagram, individual panel drawings with load assignments, panel address, relay counts, switch input information, and data line connections. Internal lighting control programs include detailed software interlock schedules for switching devices and telephone override control, and initial automatic lighting control schedule program shall be submitted for review.

C. Lighting Relay Panel (LRP)

1. The LRP shall be a wall mounted, self contained microprocessor based intelligent control panel, housing computers, power supplies, relays and all other related equipment in an NEMA 1 enclosure.

2. The power supply to the LRP shall be 277 or 120 volts, single phase, with step down to 24 volts for the LRP.

3. Barriers of dead front covers shall be provided to segregate normal and emergency lighting circuit low voltage wiring.

4. All LRP components shall be readily replaceable with "off the shelf" replacements without shut-down of the complete system.

5. All LRP's shall have included the ability, both hardware and software, to up-grade the panels to a complete integrated lighting system controlled through a central processor that will program, modify, report relay status or errors, without any modifications to the existing LRPs'. The only materials that would be added are the remote interface computer with software and the data line between the processor and the LRPs. LRP's that can not be up-graded with out adding or replacing hardware in the panels will not be accepted.

6. All LRPs shall be supplied with a minimum of 32 programmable switch inputs. Each input shall support both momentary and maintained switch inputs mixed or matched in the same panel. Each switch input can operate one of all of the relays or any programmable group of relays.

7. A sixteen (16) character keypad and a thirty-two (32) character liquid crystal display (LCD) shall be provided on each LRP for local control, status check, and programming. It shall be possible to program all parameters as specified for the system through this local keypad and display. The programming and status functions available are to be as follows:

   ASTRO time clock
   day schedules
   exception (holiday) schedules
   relay assignment
   override switch assignment
   relay commands
   set time and dates
   display time and date
   Errors during programming shall be annunciated by an audible tone.

8. All LRP's shall be able to transmit all local programming, status, and control data to a central controller via data line communication without modifying the panels. If the central processor up-grade is selected by the owner at some future date only the data line, central computer, and software need be added.

9. LRP enclosure shall be suitable for surface installation, with hinged door and lock.

10. Provide seventy-two (72) hour battery back-up for all vital memory functions.

11. Contractor is responsible to provide a complete working lighting control system including all conduits, wire, switches, LRP panels, relays, and programming.

D. Remote Control Switches

1. Remote control switches, single pole, two circuits, momentary contact for normal services. A 25 volt (mounted on the rocker arm) red L.E.D. for "on" condition.

2. System shall be capable of using any low voltage momentary or maintained dry contact switch. Switches can be mixed or matched between maintained and momentary in each panel.

3. Switches shall wired with 3 conductor #18 awg for each switch with a pilot light.

E. Manual Controls

1. Manual controls shall be on such basis that any switch shall be capable of controlling any relay or group of relays in any configuration without restriction. Provide a manual override keypad on each panel for programming, relay status, and scheduling.

F. Low voltage relays

1. Relays shall be plug-in type and shall be activated electronically by momentary pulse.

2. Relays to be rated for 20 Amp Tungsten filament, ballast, or resistive loads.

3. Relays shall be electrically operated and mechanically held latching single pole. Electrically held relays will not be accepted.

G. Ethernet

1. Provide Ethernet connection for remote computer over-ride.

H. Day Light Controls

1. Provide photo diode programmable sensors as indicated on the project drawings.

2. Sensors are mounted on the roof exterior areas as near as possible to the associated LRP via 4 conductor shielded cable.

3. Controller is mounted next to the associated LRP. Controller shall display the actual foot candle as indicated by the sensor. Calibration and setpoints for on/off controls based on foot candle levels shall be adjusted on the controller.

4. Controller shall have adjustable HID timers, cloud cover on-delay and off delay timers, H-O-A controls, pilot light indication, and full digital readouts.

5. Controller shall require 120/277 volt AC power form the associated LRP. Controllers shall be a complete U.L. Listed assembly.

I. Programming

1. Contractor is responsible to provide a factory trained and authorized field engineer to assist in the basic programming of the lighting controls. Base programming to include switch to relay assignment for overrides, schedules for M-F, week-end and holiday schedules.

2. Contractor to provide a second programming field trip to coordinate with the building owner/tenant all final programming adjustments that may be required.

J. Remote Relay Panel:

1. Self contained panel housing relays controlled by LRP. Number of relay as indicated, NEMA 1 enclosure.

2.33 ACCEPTABLE MANUFACTUREERS, MATERIAL

A. Insulated Bushing: O.Z. Gedney types A, B and copper lug BLG, equivalent by Midwest Electric.

B. EMT Fittings - Steel Raintight: Appleton TW Series, Crouse-Hinds MW Series, Steel City TC710 Series, Thomas and Betts 5120 Series, Tomic 20 Series.

C. Liquidtight Flex: type U.A. with built-in bond wire, American Flex Conduit, Anaconda, O.Z. Gedney.

D. Gutters and Wireways: Circle AW, Hoffman Engineering Company, Square D.

E. Nonmetallic Conduit, Polyvinyl Chloride, Schedule 40, 90°C Rated: Can-Tex Industries, Carlon, Certain Teed, Kraloy Plastics.

F. Hubs: Myers, Appleton.

G. Conduit Seals: Crouse-Hinds Type EYS, equivalent by Appleton.

H. Expansion Joints: O.Z. Gedney Type "DX" or combination of fittings, equivalent by Appleton. See conduit installation specifications.

I. Wall Entrance Seals: Thunderline Link-Seal, O.Z. Gedney Type WSK.

J. Caulking Compound: Tremco - "Acoustic Sealant", Manville - "Duxseal", Interchemical - "Pressite 579.64", Chase Foam.

K. Penetrations, Fire Rated Wall or Partitions: UL rated assembly.

L. Flashing: Stoneman 1100 Series, equivalent by Archer.

M. Conduit Wrapping: Polyvinyl tape - 20 mil ½ lap by Manville, Minnesota Mining "Scotch" or 40 mil PVC coating by Occidental Coating Company, Robroy.

N. Steel Outlet Boxes: 4" square by 1½" deep minimum, Appleton, Bowers, Raco, Steel City.

O. Acoustical Outlet Box Pads: Harry A. Lowry Associates, Nelson Electric FSP.

P. Prefabricated Outlet Box Assemblies: G.B. Electric, Caddy.

Q. Cast Boxes and Conduit: Appleton, Crouse-Hinds, Pyle/National, O.Z. Gedney.

R. Floor Boxes: Hubbell "Dual Level" fully adjustable Type 1, round cover. Rectangular for ganged boxes. For flush duplex outlets S-3925 cover. Steel City 600 Series, Walker 880 Series. Afterset: Hubbell PT7 Series. Equal by Steel City, Walker.

S. Cast Iron Floor Junction Boxes: Appleton, Thomas and Betts, O.Z. Gedney.

T. Precast Concrete Pull Boxes:

1. Enclosure: Associated Concrete products, Brooks Products.

2. Waterproofing: Sonneborn Hydrocide. Equivalent by Dow Corning.

3. Hardware: Inwesco 10A Series Racks and Hooks, 11A31 Insulators, Equivalent by A.B. Chance.

U. Hand Hole: Brooks Products No. 3-RT, equivalent by Associated Concrete Products.

V. 600V Conductor Installation Accessories:

1. Steel Spring Connectors (No. 8 and Smaller): Scotchlok Types R and Y, Ideal Wirenut.

2. Solderless Connectors (No. 6 and Larger) Copper or Bronze Bolted Saddle Type: Burndy - "Versitaps", Thomas and Betts "Locktite", O.Z. Gedney solderless, Teledyne Penn-Union Vi-tite.

3. Power Distribution Blocks: Square D Series 9080, equivalent by Marathon Special Products.

4. Compression Connectors (Motor Connections No. 8 and Smaller): T&B Stakon, Burndy equivalent.

5. Tape: Scotch #23 rubber tape and #88 vinyl tape. Sola Basic, Sierra-Tomic.

6. Sealant: Scotchkote. No known equal.

7. Pulling Compound: Powdered Soapstone, Ideal Yellow 77, Wirelube, Minerallac #100, Sierra-Tomic.

8. Cable Supports: O.Z. Gedney split wedge, Kellems cable clamps.

W. Ground Connectors:

1. In-Slab Ground Connectors: O.Z. Gedney Type VG, equivalent by Burndy, Cadweld.

2. Conductor Joint: Exothermic - Cadweld, Thermoweld. Compression - Burndy Hyground.

X. Vibration Isolators:

Type	**Description**	**Manufacturer: California Dynamic Corporation, equal by Mason Ind., Amber/Booth, Sause (Vibrex)**
PN	Neoprene Pad	VT
HMN	Neoprene Mount	RQ*
HN	Neoprene Hanger	RH*
MSL	Spring Mount	RJEQ*
HS	Suspension Hanger	CH30*
WMN	Neoprene Mount	RBA

Preapproved for California

Y. Seismic Bracing Systems: B-line, NUSIG or California approved equivalent.

Z. Afterset Anchors: Hilti Kwikbolt, Phillips "Redhead" wedge type.

2.34 ACCEPTABLE MANUFACTURERS EQUIPMENT (Subject to conformance with specification).

A. Switchboards:

1. 2500A and Smaller: General Electric Type AV2 line.

2. Equivalent by Siemens, Square D, Cutler-Hammer.

B. Power Panelboards: General Electric, Siemens, Square D, Cutler Hammer.

C. 480/277V and 208/120V Lighting and Outlet Panelboards: General Electric Type AE and AQ with TEY, TED4, TFJ and THQB, TQD branch breakers. Equivalent: Square D, Cutler Hammer.

D. Digital Metering: CH Type IQ Data Plus II, equivalent by General Electric, Square D.

E. Motor Starters: Allen Bradley, General Electric, Siemens, Square D, CH.

F. Contactors and Relays:

1. Mechanically held: 20A - ASCO Bulletin 917; 30A and larger - ASCO Bulletin 920.

2. Magnetically Held Contactors: Same as for motor starters.

3. Magnetically Held Relays: Industrial grade with normally open and normally closed contacts. Manufacturers same as for motor starters. Equivalent to Square D Class 8501, Type H, General Electric CR2810.

G. Photoelectric Cells: Fischer Pierce 6690 Series with S476-15 receptacle mounted on cast box. Equivalent by Paragon, Tork.

H. Photo Electric Smoke Detectors (Where not Part of Fire Alarm System): Electro Signal Lab Inc. 600 Series, self-contained 120V.

I. Circuit Breakers: Molded case.

1. For Lighting Panelboards: Same as panel manufacturer.

2. For Switchboards, Motor Control Centers, Power Panels, Bus Plugs: General Electric, Siemens, Square D, Cutler Hammer.

J. Disconnect Switches (Heavy Duty, Quick-Make, Quick-Break):

1. 800A and Smaller: General Electric, Siemens, Square D, Cutler Hammer. Rejection type for fused units.

2. Motor Switches: For 120V, 230V up to 5 HP, 460V up to 10HP. Square D Class 2510. Equivalent by General Electric, Cutler Hammer.

K. Fuses:

1. 600A and Smaller: Low peak, dual element Class RK1, Buss LPN-RK (250V) LPS-RK (600V). Equivalent by Gould Shawmut, Littlefuse.

L. Transformers (Dry Type):

1. Acme, General Electric, Square D, Cutler Hammer.

2. Shielded Transformers: GE Guard I. Equivalent by Square D, Cutler Hammer.

M. Wiring Devices:

1. Maintained Switches: Hubbell 1221-I Series, equivalent by Arrow Hart, Bryant, Pass/Seymour.

2. Momentary Switches: Hubbell 1557-I, Arrow hart 1995 Series.

3. Pilot Lights (Ganged with Switch): Neon type, Arrow Hart #1720, voltage and color as specified, equivalent by Pass/Seymour.

4. Duplex Outlets: Hubbell 5352-I, equivalent by Arrow Hart, Bryant, Leviton, Pass/Seymour.

5. Clock Receptacle with Stainless Steel Plate: Arrow Hart 452, General Electric 4224-5, Hubbell 5235.

6. Floor Box Mounted Outlets: Hubbell, Lew, Walker.

   a. Duplex receptacle on floor box - Hubbell "Low Con" style, satin aluminum.

   b. Power outlet on floor box - Hubbell "Low Con" style with furniture feed plate.

   c. Low Tension: 2" diameter IPS cast aluminum standpipe, or kick ring, equivalent to Walker 810-2 with support.

7. Special Receptacles: NEMA configurations as specified and or shown on drawings, Arrow hart, Hubbell.

8. Ground Fault Interrupting Receptacles: Hubbell GF 5362-I, with WP26 lift cover. Equivalent by Arrow Hart.

9. Weatherproof Receptacle, Flush Mounting: Hubbell GF 5362-I with WP26 Lift Cover. Equivalent by Arrow Hart.

10. Weatherproof Receptacle, Freestanding: Hubbell GF 5362-I with WPF526 Lift Cover (FS box mounting). Equivalent by Arrow Hart.

11. Plates - Smooth Satin Finish, Type 302, 0.035" Stainless Steel: Arrow Hart, Hubbell, Leviton.

12. Low voltage control transformer, 30VA - Edwards No. 599. Equivalent by Acme, General Electric, Cutler Hammer.

13. Low voltage push button, momentary - Edwards No. 852. Equivalent by Eagle.

N. Lighting Fixtures:

1. Conform with all requirements described under "Lighting Fixtures, Lamps and Accessories" in addition to scheduled descriptions. Submit itemized conformance list with bid.

2. Lighting Fixture Schedule: Verify ceiling construction on Architectural drawings. Supply fixture types compatible with ceiling.

3. Lenses equal to KSH Pattern 19 3/16", where not otherwise noted.

4. Ballasts, Electronic: Advance, Magne Tek Triad, Motorola, Valmont.

5. Ballasts, Core and Coil: Advance, Universal, Valmont. Energy saving type equivalent to Universal SLH Series.

6. Emergency Power Battery Pack: Bodine, Siltron.

7. Lamps: General Electric, Osram, Phillips, Sylvania.

O. Occupancy Sensor: My-Tech, Watt-Stopper.

P. Dimmers:

1. Solid-State: Lightolier, Lutron, Prescolite.

2. Dimmer System: Lutron, Macro Electronics, Strand Electro Control.

Q. Low Voltage Switching: Leviton, or equal by LCD or Watt-Stopper.

PART 3- EXECUTION

3.01 SITE CONDITIONS

A. Examine the drawings of all trades and all specification sections, survey the existing conditions, and include all necessary allowances in bid proposal.

B. Resolve all conflicts with code requirements, site conditions and the work of other trades.

C. Verify the locations of all existing utilities prior to construction and protect them from damage.

D. Pay all costs incurred due to damage of existing utilities or other facilities.

3.02 LOCATIONS

A. Drawings are essentially diagrammatic, and although the size and locations of equipment are generally shown to scale, make use of data in all Contract Documents, and informational documents, and verify this information against field conditions.

B. Drawings indicate the required size and points of termination of conduits, and the number and size of wires and suggest proper routing of conduit. Install conduit with all necessary offsets, junction boxes, and fittings to conform to the structure, avoid obstructions,

preserve headroom, maintain required accessibility, and satisfy the requirements of the governing codes and the standards of good practice.

C. Architectural and structural drawings and specifications take precedence over the electrical drawings in the representation of the general construction work. Civil drawings take precedence in the representation of site work. Refer to the drawings, specifications, and reviewed shop drawings for all work, in order to coordinate electrical work with other work of the project.

D. When changes in indicated locations or arrangements are necessary due to conditions in building construction, rearrangement of furnishings or equipment, or conflict in location, make such changes at no cost to Owner, provided that the change is ordered before conduit is installed and that length of conduit run is not revised by more than ten percent (10%) of indicated run, for conduits 1" nominal or smaller, and five percent (5%) for larger conduits.

E. Bring discrepancies between different drawings, between drawings and actual field conditions, or between drawings and specifications, promptly to the attention of the Architect for decision, and stop pertinent work subject to resolution of the conflict.

F. Equipment in mechanical, electrical and signal rooms or spaces has been laid out in accordance with the requirements of typical equipment of the class indicated. Modify wiring and location and pay all costs, to meet to the requirements of the particular manufacturer's equipment which is installed, where it is different from that shown on the drawings. Do not use equipment which exceeds space or which infringes on required aisle or access space.

G. Coordinate the location of the lighting fixtures and framing with the ceiling construction so that the overall pattern is acceptable to the Architect. Architectural reflected ceiling drawings, plans and details govern. Locate lighting fixtures in mechanical and equipment rooms to avoid ductwork, piping and equipment. Coordinate location with trade supplying equipment prior to lighting fixture installation.

H. Locate sleeves, floor and wall outlets, and devices serving equipment, built-in fixtures and appliances, in accordance with dimensions on the respective equipment drawings of the equipment supplier.

I. Provide clarifying details where required by inspecting authority and obtain Architect's and Inspector's approval prior to installation.

3.03 RESPONSIBILITY

A. Provide complete functioning systems and include all labor, material and associated tools and transportation required for the system to operate safely and satisfactorily. Provide empty conduit systems where specified, complete, clear, and with pull wires, ready to accept conductors and allow for equipment installation.

B. Provide all work indicated on the drawings whether or not specifically mentioned in the specifications.

C. Coordinate the installation of electrical items with the schedules for work of other trades to prevent delays in total work. Assume responsibility for any cooperative work which must be altered due to lack of proper supervision or failure to make proper provision in time. Perform alterations to Architect's satisfaction, and pay all costs.

D. Resolve code conflicts prior to installation. Remove and replace all work conflicting with codes or, in the Architect's opinion, not meeting specified requirements and pay all costs.

3.04 QUALITY ASSURANCE

A. Provide an experienced superintendent in charge of erection of the work, together with all necessary journeymen, helpers and laborers required to properly unload, erect, connect, adjust, operate and test the work involved to provide a neat, workmanlike installation. Latest industry standards are considered minimum.

B. For the actual fabrication, installation, and testing of the work of this section, use only thoroughly trained and experienced personnel who are completely familiar with the requirements for this work and with the installation recommendations of the manufacturers of the specified items. Where specified, provide factory personnel for testing and adjusting.

C. For major equipment such as transformers, switchboards, panelboards, transfer switches, motor control centers, circuit breakers, control devices, etc., submit letters from principals of the equipment manufacturing company, with bid proposal, specifying the location of factory authorized parts and service organizations intended to serve the subject project.

D. For signal, communication and specialized systems, perform all work in accordance with instructions provided by, and under the supervision of, factory authorized agents. Provide evidence that the factory agent has five projects equal in scope to specified systems, operating satisfactorily. Submit a letter, with bid proposal, from principals of the equipment manufacturing company specifying the location of factory authorized parts and service organizations now in service intended to serve the subject project, the length of time which they have been in operation (which shall not be less than three years) and the guarantee available for the continued operation.

3.05 EXISTING FACILITIES

A. Examine the drawings and specifications of the completed work and inspect the site to establish the scope of demolition work and new work to be provided under this sections and clarification of the phasing of the work.

B. Based on project phasing and scheduling, demolition work will be taking place in and around existing areas that are to remain in service. Where the work under this section affects or interferes with the operation of any existing areas to remain in service, or portions of the work already in operation, provide all necessary work and material including premium pay, required to avoid shutdown of these areas during normal operations. Obtain Owner's approval for shutdown, in writing, 48 hours prior to shutdown.

C. Existing electrical and signal facilities outside of the demolition area to remain in place and in service during demolition.

D. Unless specifically noted or otherwise indicated or directed, remove all existing electrical equipment in the areas to be demolished. Deliver all equipment removed, including lighting fixtures, to the Owner's representative.

3.06 REMODELING

A. Where remodeling of existing areas is indicated, provide all work indicated and required for a complete and operating facility. Where work is adjacent to existing fixtures or devices, provide matching products to present uniform appearance. Salvage demolished material and equipment and deliver to Owner as directed. Dispose of salvaged materials and equipment where so directed in writing by Owner. Patch all openings in existing walls or floors caused by removal of materials and/or equipment under this work.

3.07 DEMOLITION

A. Where areas of existing facilities are indicated to be demolished or remodeled, visit site to determine scope of work. Relocate electric and signal system equipment, and reroute or replace conduit and wiring as required to conform with new use of the area and maintain operation of adjacent areas.

3.08 EXCAVATION, BACKFILLING

A. General: Provide excavation, backfilling, and pumping required for work under this section, in accordance with requirements of Earthwork Section, Division 2, of the specifications. Remove surplus materials as directed.

B. Existing Paving: Where trenches are required through existing paving, resurface, after installation, to match existing in accordance with appropriate sections of Division 2, using accredited journeymen of respective trades.

C. Conduit Trenches: Provide cover over buried conduit, where not otherwise detailed or noted, and in accordance with NEC limitations, as follows: 30" over duct banks; 30" over secondary and signal conduits outside building; 24" for 1 ½" and larger secondary and signal conduit within building footprint. Cut trenches to bottom of conduit, allowing for concrete encasement where specified, and make cuts as narrow as possible. For nonmetallic conduit without encasement where permitted elsewhere herein, excavate 4" below conduit and backfill with sand. Snake conduit to allow for expansion. In rock, excavate 6" below conduit and backfill with gravel for encased conduit and sand for direct buried conduit. Separate signal and power conduit in a common trench by 12" of tamped earth or 6" of concrete. For electric and telephone utility services, conform with utility company requirements where more restrictive.

D. Within Building Footprint: Run buried conduit, 1¼" nominal and smaller, 6" minimum below slabs in contact with earth. Encase as described for underground conduit. Conduits with diameter less than 1/3 of slab thickness may be run in slab on grade where practical and where accepted by the Architect in writing.

3.09 EQUIPMENT PADS AND CURBS

A. Install floor mounted switchboards, transfer switches and transformers on 3" high level concrete pads in basement, ground floor where on grade and roof levels, in mechanical rooms on all levels, and where indicated. Coordinate with equipment supplier so that device handles do not exceed 6'-6" above working surface per NEC. Extend pad in front of devices or metering to maintain code or utility company height limits.

B. Provide exact pad size, location, and conduit entries based on equipment shop drawings to concrete section for construction.

3.10 SLEEVES, OPENINGS, CUTTING AND PATCHING

A. Locations of Openings: Locate all chases, shafts, sleeves, openings, anchors and inserts required for the installation of the electrical work during framing of the structure and before concrete placement. Obtain approval from the Architect, in writing, for penetration of structural members or blockouts through slabs for grouped conduits, prior to installation.

B. Cutting and Patching: Provide, per Architect's requirements, cutting, core drilling and associated patching required due to improperly located or omitted openings, using accredited journeymen of the respective trades and without cost to Owner. In a like manner, patch openings in existing walls or floors cause by removal of conduit. Do not sleeve, cut nor drill structural members nor footings without Architect's written approval. Fill all blockouts and preformed openings provided for work under this section with concrete in a manner to maintain the fire rating integrity of the floor or wall.

C. Location of Sleeves:

1. Place conduits which rise through slabs on grade before concrete is poured.

2. For 1" or smaller conduits penetrating non-rated interior walls, solidly grout around conduits in concrete and masonry and solidly plaster around conduits in plaster or dry wall.

3. For all conduits penetrating rated walls and floor slabs and for 1¼" or larger conduits penetrating walls, provide sleeves of ample size to provide ½" minimum annular space. Center conduit in sleeve and support independently of sleeve.

D. Types of Sleeves:

1. Sleeve Assemblies: Provide UL listed assemblies for penetrating rated walls or floors in accordance with their fire rating. Requirements herein are minimum. Submit shop drawings.

2. Suspended Floor Slabs: Standard weight, galvanized steel pipe, stubbed 1" above finished floor. Cap unused sleeves to maintain floor rating.

3. Interior Walls and Partitions: Adjustable galvanized sheet steel with wall flanges and plaster lip. Provide 22 gauge for 2" and smaller conduit, 20 gauge for larger conduit.

4. Membranes: Stub sleeve 6" beyond membrane and provide flanges suitable for sealing of membrane. Obtain Architect's approval of sleeve detail.

5. Exterior Walls Below Grade: Provide, where entering rooms below grade, sealing fitting consisting of oversized sleeve and modular mechanical type seal consisting of interlocking synthetic rubber links shaped to continuously fill annular space between conduit and sleeve (or wall opening for existing walls). Tighten bolts to form watertight seal. Install per manufacturer's directions.

E. Installation: Cut all sleeves smooth, ream and install perpendicular to floor or wall.

F. Escutcheons: In finished locations exposed to public, provide chrome plated split type escutcheons held on by setscrews where conduits pass through floors, walls, and ceilings. Provide plates on conduit extending through sleeves.

3.11 CAULKING

A. Provide as specified herein and detailed on the drawings.

B. Conduit Penetration: Through exterior walls, caulk conduit penetrations for full wall thickness for waterproofing. At fire rated floors and partitions, pack sleeves with approved packing for full sleeve depth and caulk both ends.

C. Conductor Penetration: Where sleeves or openings in fire rated floors and partitions contain conductors not enclosed in a raceway, provide UL approved seal of the sleeve or opening per manufacturers' instructions and code requirements.

D. Compound Characteristics: Putty like; workable with hands down to 35°F; firm up to 300°F; remain pliable when exposed to air; adhere to metal, plastic, concrete, masonry and cable insulation; harmless to hands; seal without causing deterioration of materials sealed.

E. Fire Rated Walls, Partitions or Floors: UL classified fire retardant assemblies.

3.12 FLASHING

A. Wherever conduit extends through roof, install a four pound seamless lead flashing assembly and counter flashing. Coordinate installation of flashing with roofing installation. Provide pitch pockets as option and where indicated.

3.13 NOISE AND VIBRATION

A. General: Provide systems free of noise and/or vibration transmission to building from transformers, rotating machinery or electrical equipment through structure or conduit connections. Provide sleeved openings for all conduit penetrations between rooms of low and high ambient sound levels, caulked to ensure airtight resilient closure. Correct, at no cost to Owner, conditions resulting in noise transmission to facility from work under this section.

B. Connections: Connect to motors, transformers and all isolated or vibrating equipment with 24" minimum length of liquid tight flexible conduit, slack connected. For dry type transformers, conduit may be stubbed into bottom, not connected to, but bonded to, frame, in lieu of flexible connections.

C. Vibration Isolation: Provide between structure and vibrating or rotating equipment furnished and/or installed under this section.

Equipment	Design Deflection	Isolator
Transformers (Below 100 KVA)		
Slab, On Grade	0.06"	PN
Above Grade, Supported	0.3"	HMN*
Above Grade, Suspended	0.2"	HN*
Transformers (Above 100 KVA)		
Slab, On Grade	0.06"	PN
Above Grade, Supported	0.3"	HMN*

*Equipped with preapproved seismic restraint as noted by an assigned "R" number.

D. Switchboards, Distribution Boards, Transfer Switches: Manufacturer to size, brace and arrange bus within gear and design enclosure to preclude hum and vibration. Provide sound baffles and shock mounts for mechanically-held relays and contactors.

E. Wiring: In multiple runs of feeder conductors in conduit or wireway, twist associated phase and neutral conductors together to avoid abnormal field generation.

F. Equipment Frames: For vibrating or rotating equipment to be isolated, provide mounting frames and/or brackets to carry the load of the equipment without causing mechanical distortion or stress to the equipment.

G. Machinery Rooms:

1. In machinery and electrical rooms located above occupied spaces, do no penetrate floor slab without specific approval in writing. Where floor has membrane, avoid penetrations and run all conduit overhead.

2. In general, run conduits to motors and equipment overhead. For overhead drops exceeding 8' in length or floor risers over 2' high, provide unistrut or pipe brace to floor or structure. For slabs in contact with earth, run conduit as specified under other paragraphs herein. Verify stub-up location with equipment supplier.

3. Do not run conduit through vibration isolated (floating) concrete slabs.

H. Outlets:

1. Do not use back-to-back outlets or through boxes. Separate outlets on opposite sides of wall by 12" minimum unless otherwise detailed.

2. In rated walls provide separation as required by Code.

3. In sound insulated floors, ceilings, and wall partitions, provide acoustical outlet box pads, pliable, putty-like, ¼" thick, per manufacturer's instructions. Include boxes for receptacles, switches, telephone and data outlets. Isolate all conduit within the sound rated floor ceiling assembly from the building construction at points of support or contact by means of approved resilient sleeves, mounts or underlayments ¼" thick.

3.14 SEISMIC AND BRACING REQUIREMENTS

A. Scope: Brace electrical systems and equipment to withstand lateral and vertical forces that result from earthquake or wind, in accordance with NUSIG guidelines.

B. Equipment: Anchor all equipment, switchboards, panelboards, transfer switches, motor and engine generator sets and transformers by securely bolting them in place to the building structure. Install vibration isolation devices where specified. Provide bolts, anchors and bracing to withstand acceleration of 0.5 g. Equipment manufacturer to submit weight, center of gravity and method of fastening required for seismic anchoring.

1. For equipment weighting 1000 pounds or more, submit calculations for anchorage prepared by a structural engineer, registered in the State, conforming to all applicable codes.

C. For conduits, 2" nominal and larger, suspended more than 12", provide diagonal bracing to structure at hangers, at changes in direction, and on approximate 30' centers, installed

along with conduit in accordance with NUSIG and using approved components. Rework of other trades due to late installation of bracing is the responsibility of this section.

D. For conduits crossing seismic separations, provide approved fittings or combinations of fittings, that permit horizontal expansion or contraction and vertical and angular deflection. Selection of fitting to be based on the dimension of the separation and conduit size. Refer to Raceways and Wireways".

E. Lighting Fixtures:

1. Pendant Fixtures: Provide approved seismic fixture suspension allowing for 45° swing in all directions without impacting adjacent obstructions or structure. For stem mounted fixtures, provide approved seismic ball aligners at fixture and outlet box, and 3/32" stainless steel aircraft cable in each stem and with the circuit conductors, continuous from the fixture housing, through the outlet box, and attach directly to the structure above. Within the fixture housing, provide a mechanically crimped cable loop and secure to the housing with a closed eye bolt nut and lock washer. At the structure above, provide a cable loop and closed eye threaded lag screws and steel wedge drilled anchors. Level and adjust fixtures and remove cable slack before attaching to the fixture housing.

a. Where pendant fixtures are indicated to be cable supported, provide 3/32" (minimum) stainless steel aircraft cables, cable to rod swivel adapters, ¼-20 rod extensions above the ceiling to the structure. Brace the rod seismically with a rod fitting and (3) 12 gauge steel wires extended from the rod to the structure at 120° angles.

b. If a 45° swing cannot be achieved, brace fixtures to prevent contact with the adjacent obstruction or structure. All fixture suspension assemblies to be State of California approved.

c. Submit a sample of the seismic ball aligner and details of the cable attachments and assemblies with the fixture ship drawing submittal.

2. Suspended acoustical ceiling system: Suspend recessed fixtures with two 12 gauge wires at opposite ends per California building Code Chapter 47. Support recessed fluorescent fixtures from building structure with steel support wires, two 10 gauge at diagonal corners or four 12 gauge at four corners. Allow ¼" slack in wires. Attach fixture positively to ceiling members with attachments having a capacity of 100% of the fixture weight in all directions. Support fixtures weighing over 50 pounds directly from structure with approved hangers, and attach the fixture positively to ceiling members. Attach surface fixtures to main runners with a minimum of two approved clamping devices, 14 gauge minimum, and support each clamp from ceiling structure with 10 gauge steel wire.

3.15 GROUNDING SYSTEM

A. General: Provide service and separately derived system grounds with resistance to ground of three ohms or less and in accordance with applicable code requirements. Maintain equipment ground continuity through entire system including raceways, wireways, equipment enclosures, lighting fixtures and devices. Provide grounding as specified and as shown on drawings. Include equipment ground conductor in all nonmetallic conduits, in all feeders as scheduled on the drawings and in branch circuiting where indicated on the symbol list. Use green insulated copper ground conductors sized per tables herein. In steel frame buildings, bond a minimum of two columns to service ground with conductors sized for service ground. Bond to building reinforcing bars

embedded in concrete footings or foundation, which equal 20 feet of ½" diameter steel, prior to concrete pour.

B. Service Ground:

1. Provide service ground bus consisting of a copper bus bar with a minimum of six ground studs mounted on wall. See details on drawings. Terminate all ground conductors at service ground bus. Locate at accessible location in main electrical room or as otherwise indicated. Engrave "Service Ground Electrode". Where additional ground buses are indicated, provide similar construction. Submit ground bus shop drawing.

2. Provide ufer ground consisting of 30' length of bare copper conductor extended full length and embedded along bottom of building concrete foundation in direct contact with earth, supported to provide 2" concrete encasement minimum. Bring loop out at center to service ground bus. Extend to foundation reinforcing steel.

3. Provide, in accessible location, exothermic bond to a minimum of two steel columns or to reinforcing of two concrete columns with insulated ground conductor in steel conduit to service ground bus.

4. Bond from building cold water main, 2" or larger, within 5' of building entry, to service ground with insulated ground conductor in steel conduit to service ground bus. Make the cold water pipe system continuous by bonding around insulating joints. Utilize cast bronze heavy duty ground clamps with bronze bolts and nuts.

5. Extend neutral and equipment ground from service switchboard or switchgear (ahead of service mains and neutral bus link) with insulated conductor in steel conduit to ground bus.

6. Extend separately derived system grounds to service ground bus when located in same building as service. In separate buildings, provide separate service grounds.

7. Service Ground Conductor:

Service (or Transformer Secondary) Amperes	**Embedded AWG**	**Cold Water & Service Ground AWG**	**Conduit**
400A and Less	1/0	1/0	1"
500A - 800A	2/0	2/0	1"
900A - 2000A	4/0	4/0	1"

8. Where required to obtain specified resistance to ground, drive additional ground rods, number as required, and connect to service ground bus with insulated conductor in steel conduit.

9. Where ground loop is provided in main electrical room, extend both ends of loop conductor to service ground bus in steel conduit.

C. Separately Derived System Grounds:

1. Ground transformersand uninterruptible power supplies from neutral bus or bushing to main service ground at service ground bus. In electrical rooms remote from the service ground, provide separately derived system grounds. Extend insulated ground conductor in steel conduit per Paragraph D.

2. For electrical rooms in contact with grade, provide 25' length of bare copper conductor embedded along bottom of closest 30' or longer building concrete foundation and extend to ground bus located in electrical room, as described for service ground. Bond from ground bus to cold water pipe (2" minimum), and to steel beam or column with insulated conductor in steel conduit.

3. For electrical rooms above grade, provide ground as for rooms on grade to ground bus located in the closest electrical room on grade or in location as indicated. Extend transformer and/or generator ground to grade level ground bus.

4. Where foundation embedded ground is not practical, provide, where acceptable to enforcing agency, a minimum of four driven rods located at the corners of the room and made accessible through hand holes. Loop a bare copper cable (sized for largest transformer) below the slab. Ground from ground bus to cold water pipe (2" minimum) and steel beam or column with insulated conductor in steel conduit.

D. Separately Derived System Grounding Table:

KVA	208/120V AWG Size	208/120V Conduit	480/277V AWG Size	480/277V Conduit
15 and Less	8	¾"	8	¾"
30, 45	6	¾"	8	¾"
75	2	¾"	6	¾"
112-1/2	1/0	1"	4	¾

1. For shielded transformers, bond incoming ground, shield, core, secondary neutral and secondary ground, and ground to building ground system.

E. Ground Continuity:

1. Provide green THWN insulated ground conductor in all nonmetallic conduits, each conduit run for primary and secondary feeders and where indicated for branch circuits. For lighting circuits, connect ground wire to fixture ground lead where available or bond to fixture housing by mechanical means. Connect grounding conductors to ground busses in panels, motor control centers and switchboards, and to terminals on devices, and bond to all equipment. Bond feeder grounds to all metallic pull and junction boxes. Provide copper ground conductor, sized not less than following (up to 600V systems):

Circuit Device to Setting, Amperes:	Up to 20	25 to 60	70 to 100	110 to 200	225 to 500	550 to 600	700 to 800
Ground Conductor AWG Size:	12	10	8	6	2	1	1/0

a. For parallel feeders or circuits, run ground in each conduit. Refer to schedule on drawings.

2. Provide ground bushings, fittings, and jumpers as required at expansion and seismic fittings, isolated sections and wherever ground continuity is broken. Provide ground bushings on conduit stub-ups and bond to enclosure and ground bus.

3. Bond plug strip, light track, isolated metal parts of lighting fixtures, and ground terminal of receptacles to equipment ground.

4. Provide separate green ground conductor in circuits serving isolated ground outlets, ground fault outlets, and all outlets in computer rooms and room with raised deck floors.

F. Antennas and Masts: Provide 1 #6 (minimum) THWN copper ground conductor in ¾" conduit from antennas and masts to service ground, or 2" or larger cold water pipe.

G. Communications Ground: Provide 1 #6 (minimum) THWN copper ground conductor in ¾" conduit from main telephone room and/or telephone terminal to service ground bus if available or to cold water pipe 2" or larger. Extend to other telephone terminals where indicated.

H. Materials and Methods:

1. For ground loop and/or buried ground conductor, use soft drawn stranded copper conductors size as scheduled. Snake buried conductors to allow for settlement. Bury ground loop conductors 12" minimum below concrete slabs on grade.

2. Install continuous conductors without splices. Where joints are required, use exothermic welding or UL approved compression connection to join all conductor strands, providing completed joint equivalent to or larger than conductor. Obtain inspection before covering joints.

3. Provide service and separately derived system ground conductor embedded at bottom of foundations and extend to ground bus.

4. Bond to steel columns or reinforcing steel of concrete columns with suitable copper to steel exothermic connections.

I. Ground Electrodes:

1. Where specified or required, provide ground rods driven a minimum of 10' into the earth. Locate in precast concrete hand holes. Engrave cover "Grounding Electrode". Where driven ground rods are precluded by rock, propose and submit equivalent alternate for review.

2. Ground rods to be of cone pointed electrolytic copper bonded to carbon steel core, sectional type where over 10' in length, die stamped near top with name or trademark of the manufacturer and length of rod in feet; diameter sufficient to permit driving without damage, but not less than 5/8".

3. Bond ground wires to rod with exothermic weld or UL approved compression connection.

3.16 INSTALLATION OF RACEWAYS AND WIREWAYS

A. Deliver raceways and wireways to the site in standard lengths, and store where continuously protected from moisture and weather.

B. Conduit sizes on the drawings are minimum, sized for copper conductors, for normal (THW) insulation. Use ¾" trade size minimum for underground runs. Increase sizes where required by physical conditions, or conductor insulation's. Do not combine runs

without written approval. Allow for grounding conductor as described under paragraph titled "Grounding System".

C. Conceal conduit from view above ceilings, below floors or in walls where possible. Refer to Architectural Sections and Details to determine conduit routing required to conceal conduit.

D. Do not run in concrete slabs without written permission from the Architect. Conduits with diameter less than 1/3 thickness of slab (thickness is measured above flutes of deck) shall, where permitted in suspended slabs, be limited to 5% of slab in 100 sq. ft. area with a minimum spacing of 1'-0" o.c. as per code for fire resistive two hour floor. Route conduit to maintain slab fire resistive rating and structural integrity as acceptable to the enforcing agency. Obtain agency approval prior to pouring concrete.

E. Conduit may be exposed to view in mechanical rooms, electrical rooms, shop and utility areas and where indicated. Install all conduit runs parallel with or perpendicular to structural members. Surmount obstructions by use of bends, offsets, and where necessary with junction and pull boxes. For surface mounted outlets and small junction boxes within 7' of floor, use cast boxes and/or condulets.

F. Cut conduits and raceways square and free of burrs. Ream conduit ends and clean conduits before pulling conductors.

G. Cap open ends of conduits with approved manufactured conduit seals until ready to pull in conductors. Install as complete system, mechanically and electrically continuous between outlets, gear and equipment.

H. Where conduits or wireways cross expansion or seismic joints, provide approved expansion fittings, or combinations of fittings, which allow deflection in all directions equivalent to twice the movement allowed in the structural design. For conduits 1¼" trade size or smaller, 18" minimum length of weatherproof flex, slack mounted, may be used.

I. For bends and offsets in conduit 1" and larger, use larger radius factory fittings not less than 8 times the nominal conduit size or bend with a hydraulic bender meeting NEC Table 346-10 exception. Refer to additional requirements under Paragraph titled "Interior Telephone and Data Systems Provisions". Replace all flattened, deformed or kinked conduit.

J. Route raceways and wireways so as to prevent insulated conductors from being subjected to high ambient temperature conditions. Maintain the following minimum clearances:

1. Crossing noninsulated pipe or duct - 3".

2. Crossing insulated pipes or ducts - 1".

3. Parallel to noninsulated pipes or ducts - 3".

4. Parallel to insulated pipes or ducts - 6".

K. Provide No. 14 AWG black iron pull wire or polyethylene or nylon pull rope in all empty conduits and stubs over 10' in length, extending at least 12" beyond conduit. Pull rope tensile strength to be 240 pounds up to 1½" conduit and 800 pounds for larger conduit. Submit pull rope data with shop drawings.

L. Stub conduit into bottom of dry type transformers where possible and bond to case.

M. Terminate branch circuit, communication and signal conduits turning from floor into interior removable nonmasonry partitions, freestanding appliances and equipment, with flush floor couplings before extending conduit.

N. Terminate conduits in concrete light pole bases a vertical distance of 4" above top of foundation and inclined towards the light pole hand hole. Extend conduit stubs a minimum distance of 3' from outside of concrete foundation and cap. Before pouring of concrete bases, position all conduits at correct height and bond together. Hold anchor bolts and conduits in place by means of templates until concrete sets. Allow 72 hours for concrete set before erecting standards.

O. Where entering refrigerated spaces, provide approved compound filled sealing fitting, installed in accessible location, on warmer side of wall.

P. Secure rigid or IMC conduits to panels, pull boxes, wireways and enclosures with locknuts, inside and out, and provide impact resistant plastic, insulated throat or malleable iron bushings at terminations in pull boxes, wireways, signal cabinets, boxes and enclosures. Zinc insulated throat hubs with "O" ring gaskets may be used in lieu of double locknut and bushing. For feeder conductors No. 4 AWG and larger, provide steel or malleable iron insulating bushings with plastic liner. For EMT provide insulated throat connectors secured with locknut on interior of box or enclosure. For flexible conduit, provide insulated throat die cast twist-in connectors secured with locknut on interior of box or enclosure, or steel twist-in connectors with plastic bushing, and locknut. At switchboards and bottomless gear and equipment, terminate conduits with ground bushing bonded to ground bus with code size conductor, No. 8 AWG minimum. Use approved coupling or unions. Running thread, threadless coupling, or split coupling connections are not permitted,

Q. Where conduit enters the top of drip proof gear, make connection with bolt on hubs.

R. Field thread rigid and IMC conduit conforming to American Standard Pipe Threads tapered for the entire length at ¾ inch/foot. Treat threads with protective coating to prevent corrosion, but maintain electric continuity.

S. For underground steel conduit coat all joints and points where wrenches have been applied, with bituminastic paint.

T. Extend underground stub outs as shown on drawings, but 3' minimum beyond building foundations or concrete paving adjacent to building.

U. Where conduit extending into building from site enters occupied level, slope conduits to drain away from building and seal to prevent entrance of moisture into building.

V. Provide compound filled sealing fitting for conduits terminating in or passing through hazardous areas per applicable sections of code and as indicated.

W. In vehicle maintenance and garage areas, consider area within 18" of floor as hazardous. Run conduit overhead and keep conduit, devices and equipment out of hazardous area where possible. Unless otherwise indicated, area classification is Class I, Division I, Group B.

X. Route openable raceways and wireways so as to be readily accessible.

Y. Gutter and wireway dimensions indicated on the drawings are minimum. Provide sufficient cross section to contain conductors including all splices in accordance with

code allowed percent fill. Where covers occur on bottom, provide removable wire supports not more than 3' apart.

Z. Refer to paragraph titled "Identification" for additional requirements.

3.17 CONDUIT

A. Use Rigid Steel conduit in all sizes, or Intermediate Steel conduit up to 3": In slab on grade; on exterior; encased in exterior masonry or concrete walls; in wet locations; in refrigerated spaces; in exposed locations within 7' of floor or walking surfaces; in suspended slabs, but only where permission is obtained from Architect in writing for conduit to be run in slab.

B. Use Rigid or Intermediate steel conduit for trade sizes 2½" and larger installed above grade throughout.

C. For Underground Installations:

1. Use Rigid, Intermediate Steel, or Schedule 40 PVC. Provide rigid or intermediate steel conduit elbows (2" minimum above floor) for stub-ups and risers. Use PVC conduit with PVC risers, terminating in PVC threaded couplings flush with 4" high raised concrete pad at Contractor's option for telephone, signal, communication and data systems. For fire alarm systems use rigid or intermediate steel only.

2. For utility company conduits, obtain and observe utility company standards. Obtain and observe utility company standards. Obtain utility company approvals.

D. In corrosive soils wrap underground steel conduit system with plastic wrap. Where Architect indicates in writing that soil is noncorrosive, underground steel conduit and couplings may, in lieu of concrete encasement, be protected with plastic wrap or coating:

1. Factory wrap with one-half lap of twenty mil thick identified polyvinyl tape to provide uniform forty mil coating. Field taped joints shall provide equivalent coating.

2. Factory coat with forty mil thick PVC coating bonded to conduit. Coating on couplings shall extend beyond coupling ends for one conduit diameter up to 1½".

3. Extend wrap for 12" minimum where conduit emerges from ground.

E. Use Rigid or Intermediate Steel or Electric Metallic Tubing in Trade Sizes 2" and Smaller for: Dry concealed locations; exposed locations above 7' from floor or walking surfaces; in electrical and telephone rooms at all heights.

F. Use Flexible Steel Conduit, ½" minimum trade size, 6' maximum length, for connection to lighting fixtures from fixture outlet. Where structural conditions make use of rigid conduit or tubing impractical, obtain written permission from Architect to use flexible conduit.

G. Use 24" Minimum Length of Liquidtight Flexible Steel Conduit, ½" Minimum Trade Size, Slack Connected for: Connection from outlet to motor and other moving or vibrating equipment; code length to lighting fixtures in damp or wet locations; to transformer housings; to kitchen equipment; all flexible connections in exposed areas. Where conduit stubs into bottom of dry type transformer, without connecting to enclosure, bond conduit to enclosure and omit flex connection.

H. Provide bend radius for flexible conduit not less than 5 times the trade size.

I. For connection to exterior lighting standards from normal system, Schedule 40 PVC may be used without encasement outside of building area. Use rigid steel under building stubbed 5' beyond building, and in concrete pole base. Include ground wire and size conduit accordingly. For emergency circuits, use wrapped steel conduit or concrete encased PVC.

J. Where penetrating floors or fire separations, use UL listed fittings and/or devices to maintain separation integrity.

K. Where crossing existing pavement, place conduit under pavement by approved jacking method. Keep jack pits 2' clear of edge of pavement. Do not undermine paving with excessive water. If jacking cannot be accomplished, obtain Architect's permission in writing to cut and patch paving.

L. When forming bends in nonmetallic conduit, apply heat without distorting or discoloring conduit.

3.18 SUPPORT AND FASTENING OF RACEWAYS AND WIREWAYS

A. Support vertical conduits passing through sleeves with UL approved riser clamps secured to the conduit and resting on the building structure. Support vertical conduits 1¼" and larger a minimum of once, and on 15' centers maximum. For vertical conduits smaller than 1¼" provide standoffs on 8' centers maximum. Support conduits adjacent to walls with preformed channels. Support freestanding risers with conduit racks of angle iron or channel iron members, rigidly bolted or welded together and adequately braced. For securing vertical conduits 1" or smaller to metal studs, horizontal ¼" diameter steel pencil rods tied with No. 16 gauge galvanized steel, twisted tie wires, is acceptable.

B. Install rigid steel conduit with threaded couplings. Support conduits 1" and larger on 10' intervals, smaller than 1" on 7' intervals, all sizes within 3' of connection to box, cabinet or fitting.

C. Support electric metallic tubing on maximum spacing of 10' and within 3' of connections to box, cabinet or fitting including couplings.

D. Support flexible metal conduit on 4' intervals, within 1' of outlet box or fitting (except at connections to recessed lighting fixtures) and within 2' of vibrating equipment.

E. Support gutter and wireways at 5' intervals and at changes of direction, in a manner to allow full access.

F. Attach to field poured concrete with preset inserts for conduits 3" and larger and with preset inserts or steel wedge screw anchors for smaller sizes. Shot driven studs are not permitted without written approval from the Architect. Submit size, quantity and approximate weight with request to use shot driven studs. Secure conduit with cast conduit clamps and cadmium plated machine or lag screws.

G. Attach to plaster, dry wall or hollow masonry walls with metal toggle bolts.

H. Attach to solid masonry walls with steel wedge anchors.

I. Do not fasten rigid conduit or tubing to equipment subject to vibration or mounted on shock mounts.

J. Secure conduits 1¼" and smaller to steel deck where permitted by Architect with cast or malleable iron conduit clamps and 1" minimum cadmium plated or galvanized sheet metal screws.

K. Where attaching to steel members, use beam clamp, welded threaded studs or machine screws.

L. Where not otherwise specified herein, support all sizes of suspended conduit from structure with factory made pipe hangers with split hinged malleable iron or springable steel pipe rings and solid round mild steel rods, ¼" diameter for up to 1¼" conduit, 3/8" diameter up to 2" conduit and ½" diameter for larger conduit. Friction type conduit support hardware and attachments are not acceptable. Where required conduit spacing is more frequent than available structural members, provide intermediate steel support as required.

M. Provide trapeze type hangers where three or more conduits run parallel and clamp conduit to hanger. Provide diagonal seismic bracing for suspended runs of conduits 2" trade size and larger. Use unistrut type channel for trapeze assemblies. Lathing channels are not acceptable.

N. Provide plated or galvanized hangers, threaded, rods, channels and metallic support and fastening material or provide two coats of rust resistant paint, in all damp or corrosive locations (e.g., vehicle maintenance garage, labs).

O. Do not use perforated metal strap or wood as support material.

P. Support conduit to structure above suspended ceilings 3" minimum above ceiling to allow removal of tile. Do not support from T-bars or T-bar hanger wires. Maintain 2" clearance above recessed light fixtures.

Q. Above fixed ceiling and in stud walls, tie conduit 1" or smaller to furring, support channels capable of carrying the weight, or studs with No. 16 gauge galvanized wire ties 4' on center, maximum.

R. Attached to precast or prestressed concrete as described under applicable sections of the specifications. Coordinate installation of precast unistrut or inserts where required, or obtain written approval from the Architect of alternate support methods.

3.19 INSTALLATION OF BOXES

A. Use new, bright stock and store where continuously protected from weather.

B. Install all outlets and boxes in readily accessible locations.

C. Provide additional pull or outlet boxes as required to meet code requirements or to facilitate pulling of wires. Locate in utility areas, above accessible ceilings, or in approved locations.

D. Size boxes for devices contained and the number of wires passing through or terminating therein, not less than 4" square by 1½" deep, or equivalent configuration. Use pull and junction boxes of adequate size for splices and terminations contained therein.

E. For door alarms and switches, use special boxes designed to fit in door frame.

F. For receptacles 30A rating and greater, use 2-1/8" deep box with two gang ring and plate to match device.

G. Use 4-11/16” square box with round plaster ring, for surface mounted ceiling fixtures.

H. Where more than one switch is shown at one location, group behind common plate. Use gang boxes for three or more devices. Provide barrier between 277V switches controlling two or more circuits.

I. Use 4-11/16" square by 2-1/8" deep boxes, minimum size, for more than two flexible connections to lighting fixtures.

J. For wall mounted telephone, data, computer, dictation, MATV or intercom outlets, use 4-11/16" square by 2-1/8" deep box with one gang flush plaster ring.

K. Recess boxes in finished areas, and wherever possible in utility, mechanical and electrical spaces. Provide extension rings and/or plaster rings to finish flush with finished surfaces. Install approved factory made knockout seals where knockouts are not intact, and close all openings.

L. Use cast metal, gasketed boxes for locations noted on drawings and as follows: Stub mounted outlets; surface mounted outlets within 7' of the floor; wet or corrosive locations; outlets on exterior or within exterior walls facing the exterior. For flush mounted outlets, provide adapter plates. Provide threaded plugs in unused hubs.

M. For concrete work, use concrete boxes which allow the placing of conduit without displacing the reinforcing bars. Use masonry boxes in block and masonry walls.

N. Use extension rings with blank covers for surface extension from flush box.

O. Support light fixture outlets to building structure and equip with fixture stud and hanger bar or supporting device as required, including outlets for fixtures furnished by others. Support lighting fixtures in excess of 60 pounds to structure independently of outlet box.

P. Do not use back to back outlets or through boxes. See paragraph titled "Noise and Vibration".

Q. Provide boxes for all devices. For devices not specified or scheduled, use boxes as approved, adequate for device to be installed.

R. Combine devices in ganged box with suitable barriers behind common plate where indicated, specified or detailed. Provide separate or barriered boxes for normal and emergency devices.

S. Provide flush mounted box with horizontal single gang ring for surface mounted multi-outlet assembly in metal raceway.

T. Install boxes in a rigid manner, with box hangers, expansion shields in masonry, and machine screws on metal work. Do not nail to structure. Use plated or galvanized screws throughout.

U. Secure pull and junction boxes to the structure independently of the conduits by means of bolts, rod hangers or brackets.

V. Prefabricated Outlet/Junction Box Assemblies: The following types of box assemblies are acceptable, subject to a shop drawing submittal review and the basic specification requirements for outlet and junction boxes.

1. Wiring device outlet box attached to the back of a one piece vertical galvanized steel bracket that incorporates a back wall support flange, and is designed to mount in the floor track of a metal stud partition. Bracket height as determined by the designated device mounting height. Plaster ring attachment to front of bracket. Support flange to assure that box is held in a rigid manner when the dry wall material is attached to both sides of the studs.

2. Branch circuit junction box screwed to a 1½" black iron channel that is secured to the structure above. Branch circuit conduits supported from structure above independently of box assembly per specifications.

W. For communications and signal systems, refer to paragraph titled "Communications and Signal System Provisions".

X. Provide designations per paragraph titled "Identification".

3.20 INSTALLATION OF DEVICES

A. Unless specifically directed otherwise, install switches with single gang vertical plate on latch side of door. Verify door swing before installation.

B. Unless noted otherwise, install duplex receptacles, single receptacles, telephone and communications outlets vertically. Receptacles with ground slot up. Where horizontal mounting is required, locate ground slot to right when facing outlet.

C. Connect receptacle grounding screw to equipment ground conductor where conductor is called for, otherwise bond to outlet box with green ground conductor.

D. Plumb and align all devices and install plaster rings flush with wall surface so that plates fit tight against wall and device surface without strain.

E. On exterior, and interior locations subject to moisture, use weatherproof devices.

F. Within six feet of sinks, basins or sources of running or standing water, use GFI outlets.

3.21 DEVICE MOUNTING HEIGHTS

A. Check architectural details and building equipment drawings before installation of outlets, to determine required outlet mounting heights. Install outlets, under this work, to clear built-in features, furniture and equipment.

1. The electrical drawings take precedence as to quantity and type of outlets and general location.

2. Where architectural elevations have been provided, the elevations take precedence as to mounting height and spacing.

3. Outlets, by symbol, are generally +18", +42", or as noted on the electrical drawings. If an outlet occurs behind casework and there is no architectural elevation, locate the outlet above the counter. Where counter has a backsplash, mount outlet at +4" above top edge of splash. If there is no backsplash, mount at +4" above top of counter.

4. If outlets occur back to back, paragraph titled "Noise and Vibration" takes precedence regarding separation between boxes.

5. If an outlet is symbolized at +42" above a counter and there is a conflict, use the +4" mounting height above top of splash or counter.

6. Verify mounting height of outlets below counters for garbage disposal, hot water dispensers or undercounter refrigerators with equipment shop drawings.

7. Where a cord slot is detailed in countertops, mount outlet below counter at +18".

B. Install outlets for specific equipment or appliances per equipment suppliers' instructions.

C. Mounting height for wall mounted outlet is from centerline of outlet to finished floor, and is indicated on the drawings by "+".

D. Where Not Otherwise Noted or Detailed, Use Mounting heights herein Indicated:

1. Switches and Push Buttons: +42".

2. Receptacle: +18"

3. Receptacles for Fixed Equipment: To suit equipment.

4. Receptacles in Equipment Rooms: +42".

5. At communication and/or telephone terminal backboards, provide multi outlet raceway (Plugmold) below backboard at +8".

6. Desk Mounted Telephone, Data and Intercom outlet: +18".

7. Backbox for Wall Mounted Telephones: +42".

8. Signal System Device Requiring Manual Operation: +42".

9. Manual Fire Alarm Reporting Station: +48".

10. Fire Alarm Audible/Visual or Visual Alarm: +80" to bottom of strobe (ADA Strobe).

11. Thermostats: +48".

12. Signal System Audible Device: Locate outlet so that device clears finished ceiling by 1", where not otherwise indicated.

13. Clock Outlet: +84". Above door, locate outlet so than bottom of clock clears top of door frame by 1" unless otherwise indicated.

14. Bracket Light Outlet: +96", unless otherwise indicated.

3.22 INSTALLATION OF CONDUCTORS

A. Store conductors where continuously protected from sunlight, heat and weather.

B. Install all conductors (line and medium voltage, low voltage, signal and control) in conduit. Complete conduit system and clean and dry conduit before pulling in conductors. Install conductors after general construction work in area has progressed sufficiently to avoid conductor damage.

C. Circuit as indicated on plans and single line diagrams.

D. Provide conductors of identical lengths in parallel feeder runs.

E. Use fish tapes with ball type heads for pulling conductors. Pull conductors in without kinking wires or scoring conduit.

F. Use only lubricant, which does not damage conductors, as a pulling aid.

G. Fan branch circuit and control conductors, size 1/0 and smaller, in panelboards, switchboards and terminal cabinets and tie with plastic ties suitable for conductor size. Lace larger conductors with marline for ½" on 12" centers with intermediate tie wraps. Identify spare conductors (line, control and signal), and ground both ends to enclosure case.

H. Run neutral conductors continuous to panel. Do not combine. Run feeders continuous to panel or equipment without splices. Do not splice or tap in equipment enclosures or conduits. Make necessary splices or taps only in junction boxes, pull boxes or in oversize wiring gutters designed for the purpose at panelboards.

I. Use No. 12 AWG minimum for lighting and power and No. 14 AWG minimum for signal and communications and control, except where special conductors are specified.

J. Allow 18" minimum free length of conductor where terminating in outlet or pull box. Provide longer lengths where indicated.

K. Do not loop through receptacle terminals; connect by means of conductor taps joined to branch circuit conductors.

L. Where branch circuit conductors extend from ground fault interrupting breakers, enclose conductors in plastic tubing within panelboard.

M. See paragraph titled "Identification and Warning Signs".

3.23 CONDUCTOR COLOR CODING

A. For lighting and outlet branch circuits, use factory colored conductors. For motor circuits and feeders, use pressure sensitive colored tapes, in 2" wide minimum bands, at all panelboards, safety switches, motor starters, motor and equipment outlets. Where more than one multi-conductor circuit is run in a conduit, tape each multi conductor circuit together with its neutral at each junction point and outlet.

B. Color Codes for Line Conductors:

Conductor	**Color 120/208V**	**Color 277/480V**
Phase A	Black	Brown
Phase B	Red	Orange
Phase C	Blue	Yellow
Neutral	White	Gray (where permitted or as directed)
Traveler	Brown	As approved
Equipment Ground	Green	Green
Instrument Ground and Isolated System Ground	Green with Yellow Stripes	

C. Color code conductors of cables used in communication and signal systems and control conductors in line and low voltage control panels, motor control centers and supervisory panels. Use white for grounded conductor and green for equipment ground, exclusively.

3.24 CONNECTORS AND TERMINATIONS, LINE VOLTAGE CONDUCTORS.

A. For joints, splices, taps and connections for 600V conductors, use solderless connectors.

B. For branch circuit conductors No. 8 AWG and smaller, use steel spring with semi rigid insulating shell, or setscrew type, taped.

C. Terminate all solid conductors, No. 10 AWG and smaller by a fast holding application of the conductor directly to the binding screws of the equipment to be connected.

D. For conductors No. 6 AWG and larger, use copper or bronze bolted connectors and lugs, or compression type at Contractor's option, sized for conductors. For conductors No. 1 AWG and larger, use lugs with two bolts through tongue, minimum or equivalent anti-turn construction (submit sample). Fasten lugs with flat and spring washers and hex nuts.

E. In panelboard feed through gutters, use copper power distribution blocks to extend conductors from feeder to panel.

F. Coordinate equipment terminations with equipment supplier to insure that terminals provided conform with requirements specified herein.

G. For connections at motors, use lugs on motor and branch circuit conductors, bolted and taped. For conductors No. 8 AWG and smaller, crimp lugs to conductors.

H. Splice grounding conductors by means of exothermic welding and terminate by means of approved grounding connectors. Do not solder.

I. Tape all noninsulated connections with lap wound layers of vinyl plastic tap (Scothch #88) or lap wound layers of rubber tape covered by lap wound layers of friction tape, to provide insulation equivalent to 150 percent of the conductor's insulation, but in no case less than three layers. Split bakelite casings with stainless steel spring clips designed for specific connectors may be used alternately.

J. Position all splices in pull boxes and junction boxes, so they are accessible from the removable cover side of the box.

K. Provide waterproof connections in wet locations. Pencil and roughen conductors and apply rubber tape equivalent to insulation thickness. Cover with two half-lapped layers of 8.5 mil, all weather, vinyl plastic tape, suitable for below freezing application, and coat with sealant. Form conductors into drip loops so that water does not collect on connections. Blow out conduit to remove moisture and seal conduit ends with waterproof compound.

L. Torque all electrical conductor terminations in accordance with equipment manufacturer's directions and industry standards.

3.25 CONNECTORS AND TERMINATIONS, SIGNAL SYSTEM AND CONTROL CONDUCTORS.

A. Run conductors continuous from equipment to terminal cabinets and devices. Do not splice.

B. In terminal cabinet and junction boxes terminate on solder terminals, screw type terminals, telephone type punch terminals or wire wrapped terminals.

C. At equipment or devices terminate on screw type terminals or with plug and socket connections.

D. For fire alarm systems and control use screw type terminals throughout.

E. For flexible connection use stranded conductors and crimp type lugs.

F. For shielded conductors, make shield continuous and isolate shields from ground and other shields.

3.26 CONDUCTOR SUPPORT

A. In vertical risers provide split wedge or cable clamp conductor supports in equipment or intermediate junction or pull boxes, or provide code approved equivalent. Spacing Not to Exceed the Following:

Conductor AWG Size	**Support Spacing (Feet)**
1/0 and Smaller	100
2/0 through 4/0	80
250 MCM through 350 MCM	60
500 MCM	50
750 MCM	40

3.27 EQUIPMENT INSTALLATION

A. Maintain required aisles, work space and clearances in front of equipment and behind accessible sections of freestanding equipment not less than indicated and as required by code.

B. For dry ventilated transformers, maintain minimum clearance between transformer ventilation openings and adjacent structure: 6" below 300 KVA; 18" for 300 KVA and larger.

C. For equipment less than 600V to ground, maintain 3' clear minimum in front, 3½' between accessible side and grounded surface; and 4' between rows.

3.28 EQUIPMENT MOUNTING HEIGHTS

A. Install panelboards and cabinets on a common wall with tops even. Mount panels at 78" to top unless approved otherwise.

B. Mount individual switches, starters, or controls at 72" from finished floor to top. Where required to be lower by equipment arrangement or configuration, maintain 18" to bottom from finished floor.

3.29 EQUIPMENT FASTENING

A. Fasten floorstanding equipment with four ½" bolts minimum. Grout channel sills, where provided, into concrete pad. Fasten surface mounted equipment in excess of 20 pounds to a minimum of two structural wall members. Provide support channel spanning structural members where equipment does not span two members.

3.30 PANELBOARD PROVISIONS

A. Install three ¾" conduits minimum from each flush mounted panelboard into accessible ceiling space above and below panel and cap.

3.31 LIGHTING FIXTURE INSTALLATION

A. Connections: Use Underwriters' Laboratories approved solderless connectors as specified elsewhere herein, for splicing.

B. Blocking: Provide supplementary blocking and support under this section, as required to support fixture from structural members adequate for fixture weight.

C. Pendant Fixtures: Unless otherwise specified, suspend fixture with one piece steel stems 3/8" ID minimum, with matching canopies, and finished with enamel or lacquer finish of color to match fixture or ceiling, as directed by Architect. Where pendant fixtures are indicated to be cable supported, provide 3/32" (minimum) stainless steel aircraft cables and cable to rod adapters. Provide a ceiling plate at each ceiling fitting, with baked enamel finish color to match fixture or ceiling, as directed by Architect. Provide a white #18/4 (minimum) Type SJ cord at one end of fixture row. Provide two supports per 4', 6' or 8' fixture, and uniformly spaced pattern for continuous rows.

D. Pendant Mounted Fluorescent Fixtures, Continuous Rows: Provide rigid coupling between fixtures, fastened to each fixture with a minimum of two bolts. Hang fixtures with two supports per 8' or 4' fixture. Limit continuous rows to 40' length separated by 1½" minimum with separate circuit connections to separated rows. Do not nipple between separated rows. Provide an approved swivel at the junction of stem and fixture. Where indicated, provide channel bracing of rows of fixtures.

E. Surface Mounted Fixtures: Secure to structural members or to structural channels which span structural members with ¼" minimum machine screws.

F. Refer to paragraph titled "Seismic and Bracing Requirements" for additional requirements.

G. Fixture Outlets: In accessible tile ceilings, locate outlet within 4' of fixture, rigidly fastened to structural member or suspended from structure with rod or channel. In nonaccessible ceilings, provide access to outlet through fixture housing utilizing approved outlet assembly. Provide fixture outlet for each fixture, or continuous row of fixtures, or, in demountable ceilings, for a cluster of fixtures which can be connected by 6' flexible connections.

H. Connections: Do not use fixtures as pull or junction boxes between separated fixtures. Do not flex between separated, suspended fixtures. Surface mounted fixtures, separated by not more than 6" in utility areas, may be nippled together. Connect from recessed fixtures to fixture outlet with 6' length of flexible conduit and conductors with insulation type described under paragraph titled "Conductors".

I. Machine Rooms: Prior to installation, coordinate light fixture location in machine rooms with equipment, piping, and ductwork to properly illuminate room and avoid interference's. Use only ceiling mounted or stem mounted fixtures in elevator machine rooms.

J. For wall mounted fixtures on exterior, mount on cast gasketed boxes. See Installation of Boxes.

K. Adjustable Fixtures: Aim adjustable fixtures as directed by Architect. For exterior units, adjust during evening hours to Architect's satisfaction.

L. Location: Locate fixture outlets, recessed fixtures, and determine the length of custom, continuous row cove or "reverse cove" fixtures, by reference to Architectural reflected ceiling plans and details and measurement of building construction. Do not scale electrical drawings.

M. Lamping: For initial lamping of overhead fixtures during construction, omit diffuser installation. Prior to final acceptance and when directed by the owner in writing, clean the fixtures, remove construction lamps, relamp with new lamps and install diffusers.

N. For fixtures recessed in ceilings rated one hour or more, box around fixture to maintain ceiling integrity. Allow free space around fixture, 1" for fluorescent and 3" for incandescent fixtures.

O. For master/slave arrangement provide flexible whip between fixtures containing circuit and ballast wiring.

P. Electric Signs and Outline Lighting: Provide branch circuits and code required disconnects for signs and outline lighting provided under other sections or by Owner. Coordinate location with equipment supplier.

3.32 AIR CONDITIONING, HEATING, VENTILATING AND PLUMBING CONTROL

A. Provide Under This Section:

1. Motor starters, disconnects, circuit protection, items of industrial control, individually mounted controls, as specified or required.

2. Control wiring in conduit, to remote line voltage control devices, where indicated on the drawings, and where not included under the mechanical or building automation sections.

3. Connections to motors, motorized smoke dampers and controls as shown, but coordinated with equipment supplier.

4. Verification of point of connection to motors with equipment supplier prior to conduit installation. For roof mounted exhaust fans, rise within housing where possible.

5. Connection to package unit controls furnished as part of equipment.

6. Installation and connection of separately mounted electric line voltage thermostats and controls furnished with equipment, as indicated.

7. Line voltage supply circuits for building automation system data gathering panels and consoles. Locations are not indicated. Coordinate locations with system supplier.

8. Line voltage supply circuits from closest appropriate panel to plumbing and HVAC control panels and the like, coordinated with mechanical specifications section and equipment supplier.

9. Connection to devices in piping or ductwork (such as aquastats, solenoids, float switches) installed under Division 15.

10. Installation of, and connection to, variable frequency drives.

B. The Following is Specified to be Provided Under Other Divisions:

1. Furnishing and installation of motors, motorized smoke dampers.

2. Furnishing of thermostats, and controls which are part of equipment.

3. Furnishing and installation of air conditioning chiller starters as specified in Division 23.

4. Installation of devices in piping or ductwork.

C. Refer to Divisions 23 of the specifications, and mechanical and electrical drawings to establish complete scope of work.

3.33 INTERIOR TELEPHONE AND DATA SYSTEMS PROVISIONS

A. Empty telephone and data raceway systems as indicated on the drawings and as specified herein, including all distribution conduit, wireways, blockouts, sleeves, grounds, pull wires, plywood backboards, outlets and plates indicated on the drawings for wiring provided under other sections or by Owner. Minimum conduit to be ¾" trade size for telephone/data outlet.

B. Conduit bends with a minimum radius in feet equivalent to the diameter of conduit in inches, and not exceeding the equivalent of two 90° bends in a single run. Where over two 90° bends are required, install accessible pull box in run. Bush ends of all conduits. Do not use condulets.

C. Terminate conduits at terminal backboards 6" above floor or within 12" of top of backboard. To reduce bends, backboard may be extended up to conduit stubs.

D. Plywood Terminal Backboards: 8' high by length indicated, for telephone, data or signal systems where indicated on electrical drawings, of ¾: thick, APA exterior grade Douglas Fir A-C treated with fire retardant chemical to provide a flame spread rating of not more than 25 when tested according to ASTM E84. Install backboards over plaster or gypsum wallboard, not directly to studs. Use full sheets where practicable and attached to plaster walls with ¼" flat head toggle bolts. Attach to gypsum wallboard using fire retardant, nonexplosive contact cement, applied in strips spaced 16" on center horizontally or vertically across plywood, and in a continuous band around perimeter of plywood. Install plywood with clear face exposed to view.

3.34 COMMUNICATIONS AND SIGNAL SYSTEM PROVISIONS

A. Provide empty raceway systems, including outlets, device and equipment back boxes, sleeves, grounds, pull wires, terminal cabinets and plywood terminal backboards as indicated on the drawings for wiring systems provided under other sections or by the Owner.

B. Provide back boxes for devices and equipment and terminal cabinet dimensions as required by system supplier.

3.35 ELEVATORS PROVISIONS

A. Required feeders and circuit protective devices for supply and control circuits. Circuit protection and/or disconnect in elevator machine room for power supply. Verify circuit protection device ratings with elevator supplier and make required adjustments. Shunt trip for elevator power supply.

B. Circuits terminating in junction boxes for cab lighting and conduit, for telephone as required. Coordinate location with elevator supplier.

C. Lighting, switches and receptacles GFI in elevator pits, sheave spaces, machine rooms, as indicated and as required by code and elevator section of specifications.

D. Conduit and wire extension and connection to elevator and escalator controllers and control panels from disconnect switches, junction boxes and wireways.

E. Smoke detectors in lobbies, machine room and shaft circuited to elevator room for fire mode elevator operation (Life Safety Fire Alarm System). Control conduit and wiring from heat detectors in elevator machine room and hoist way to power supply shunt trip.

F. Signal circuit from transfer switch for emergency mode operation.

G. Two inch conduit from each elevator machine room or common hoistway to monitoring location, verify location with elevator supplier.

H. Elevator control and signaling wiring is provided under separate section of the specifications.

3.36 ELECTRICALLY OPERATED EQUIPMENT

A. Where electrically operated equipment indicated on the drawings is specified under other divisions of the specification, provide, unless otherwise indicated, all conduit, wiring and connections under this section, as required for proper operation, and in accordance with wiring diagrams furnished by equipment supplier.

B. Install controls furnished by equipment supplier, and provide disconnect switches within sight of controller.

C. Refer to equipment specification for coordination of work.

3.37 PROTECTION AND CLEANING

A. Materials and Equipment: Cover all switchgear, transformers, switchboards, transfer switches, panelboards, busway, lighting fixtures, signal system equipment, etc., stored or

installed on the site, with polyethylene sheets or approved equivalent, to protect equipment from moisture, plaster, cement, paint, or other work of other trades. Cover outlet boxes with cardboard or plastic closures. Plug or cap conduit ends until final connection. Protect conduit stubs, stub-ups and risers from construction equipment.

B. Storage: Provide proper and adequate storage facilities. Store conductors, raceways and fittings, in dry, protected locations.

C. Damage: Replace all damaged or defective work, materials or equipment. Install sensitive or delicate equipment after major construction work is completed.

D. Parts: Store and protect all portable and detachable parts or portions of the installation such as spare parts, fittings, fuses, keys, locks, adapters, locking clips and inserts until completion of the work. As a precondition for acceptance of the work, deliver to the Owner's representative and obtain itemized receipt. Include receipts with the Operating and Maintenance Instruction Manual(s) required under other paragraphs of the specifications.

E. Site Cleaning: Periodically remove waste and rubbish and maintain order.

F. Equipment Finish: Clean and polish finished metal surfaces. Clean and prepare prime coated gear for painting.

G. Light Fixtures: Remove dust and handprints from light fixture surfaces. Clean diffusers before project acceptance.

H. Electrical Equipment: Clean exterior and interior of all equipment. Vacuum interiors, do not blow out. Apply permanent identification and remove temporary and unauthorized notations.

I. Acceptance: Remove all debris, dirt, grease and oil from building surfaces, caused by work under this section. Clean out and vacuum electric rooms.

3.38 PAINTING

A. In Equipment and Utility Areas: Provide factory finished equipment including prime coat and medium dark gray finishing over rust-inhibitor.

B. Outdoors and in Wet Locations: Provide additional factory coat of exterior lacquer for a two mils finish thickness. Indicate finish on shop drawings.

C. In Public Areas: Provide shop prime coat for equipment installed flush in painted walls. Finish painting is under Specification Section "Painting".

D. Touchup: Use factory supplied paint for touchup of rusty or scratched surfaces. Replace marred or scratched plated finishes.

E. Supports: All conduit hangers, racks and structural supports for electrical material and equipment under other paragraphs to be galvanized or plated to be field painted, if not plated, under this work in conformance with Specification Section "Painting".

3.39 IDENTIFICATION AND WARNING SIGNS

A. Nameplates - General:

1. Provide laminated, engraved plastic nameplates with ½" high letters for all switchboards, motor control centers, transfer switches and panelboards. Provide similar nameplates with 3/8" high letters for transformers, time switches, individually mounted breakers, switches and controls, and with sheet metal screws. Adhesive mounted nameplates are not acceptable. Refer to single line diagrams and schedules for actual designations and circuit numbers.

2. Include nameplate schedule on shop drawings submittals.

3. Indicate on Gear nameplates:

   a. Line 1 Equipment Designation

   b. Line 2 Voltage, Phase, Number of Wires, Amperes (Switchboards) KVA (transformers, generators).

   c. Example SWITCHBOARD MSS
   d. 277/480V, 3 PHASE, 4 WIRE, 3,000 AMPERES

4. On service switchboards with multiple main breakers label each main breaker and indicate number of mains on each label. Example: Main No. 1 of 3, main No. 2 of 3, etc.

5. Indicate equipment and/or equipment controlled and designation on component nameplates. Examples:

   a. Swbd Breaker: CIR 3 - PANEL 3AA
   b. Motor Switch: TOILET EXHAUST FAN EF-3
   c. Submeter: KWHR SUBMETER AIR CONDITIONING
   d. Time Switch: TSA - PARKING LIGHTS (served from Panel A)
   e. Fire Alarm Terminal Cabinet: Fire alarm system 24V DC

6. Install panelboard nameplates behind panel door in public area and on panel face in equipment rooms.

B. Tenant metering switchboard to have nameplate at meter and service switch indicating circuit number and tenant space number as assigned by Owner. In addition, provide metal nameplate holder at switch for additional nameplate identifying tenant as information is made available.

C. Nameplate Color Schedule:

1. 277V through 600V: Green letters on white label.

2. 120V through 240V: Black letters on which label.

3. Emergency System: White letters on red label.

4. Devices Connected Ahead of Service mains and Substation Secondary Mains: Letter color as for switchboard on yellow label.

5. Fire Alarm System: Black letters on red label.

6. Communication or Signal Systems: White letters on black label. Identify system.

D. Stenciled Designations: Provide readily visible block letter stenciled designations for the following with ½" high minimum letters on background of contrasting color, colors as outlined under nameplates.

1. Junction and pull boxes and cabinets of signal and communication systems identifying system and voltage.

   a. 277V lighting outlet and junction boxes - 277/480V.

   b. 480V outlet and junction boxes - 480V.

2. Feeder conduit runs on 25' centers and on both sides of wall and floor penetrations, where visible from floor and above demountable ceilings. Indicate circuit designation and number on all feeders. Indicate system on all signal and communications system conduit sized 1½" and larger.

E. Labels:

1. At all fusible devices, either individually mounted or part of gear, provide a label (as supplied by fuse manufacturer) or nameplate inside each switch cover, indicating specific type of fuse required for replacement.

2. Provide label, in addition to UL label, for each switchgear, switchboard, panelboard, transfer switch and motor control center indicating the short circuit rating of the gear as constructed and the minimum rating of devices allowable. Submit with shop drawings.

F. Emergency System:

1. Identify all enclosures per Article 700 of the NEC.

2. Paint junction box covers and covers of multi-outlet assemblies red.

3. Use visibly red receptacles and devices. Alternately engrave plates 'EMERGENCY SYSTEM" and fill in with red enamel.

G. Conduit and Conductors:

1. Tag feeders at panels, switchboards, pull boxes, and other accessible enclosures, indicating source, voltage, circuit number and conductor ampere rating. Tags to be readily readable after installation.

2. In exterior or wet locations, provide metal or laminated plastic discs as above attached with nylon cord.

3. In interior dry locations, provide metal or laminated plastic discs as above, attached with nylon cord.

4. Tag exposed ends of conduit stubs indicating system, name of panel, switchboard, etc., of origin and conduit size.

5. Identify all branch circuit system conductors with premarked, self-adhesive, wraparound cloth wire markers, indicating circuit number and name of panel, cabinet, etc., of origin, at panelboards, motor centers, switchboards, terminal cabinets, wireways, junction boxes and at outlet boxes containing more than one neutral wire.

6. Identification Format Examples:

a.	Switchboard Feeder	-	SAA-1 480/277V-225A
b.	Transformer Subfeeder	-	3ETA-1 208/120V-380A
c.	Transfer Switch Subfeeder	-	3ATS-1 480V-800A
d.	Panel AA Branch Circuit	-	AA-10
e.	Motor Control Center Circuit	-	MCCA-4 480V

7. Provide, above underground conduits stubbed for future use, engraved flush bronze marker anchored in 4" square by 12" deep concrete block, flush with grade, indicating system, conduit size and point of origin.

H. Devices: Engrave on each device plate with 3/16" high block letters filled with black enamel where noted and as follows:

1. Lock switch and switch with pilot light - device controlled.

2. Switch for fan, motor, unit heater - equipment controlled.

3. Switch where lights or equipment are out of sight - equipment controlled.

4. Switches in gangs of three or more - description of lights or equipment switched.

5. Receptacles over 150V to ground and/or 30A and higher rating - voltage and ampere rating.

6. Isolated ground Receptacles - "Isolated Ground".

7. Where wording is not indicated, allow for ten letters per device and use wording as directed.

I. Warning Signs: Conform with the latest edition of NEC. Provide 18 gauge steel, white porcelain enameled signs with 1" high black letters in all electrical and communication rooms and closets reading ELECTRICAL (or SIGNAL) ROOM- NO STORAGE PERMITTED.

J. Panel Schedules: Provide typewritten panel schedules on inside of panel doors behind clear plastic. Indicate as-built number and type of outlets served and general location of outlets or fixtures and/or item of equipment served. Where modifying existing panels, provide new typewritten schedules reflecting modifications provided under this work.

3.40 TEST AND CERTIFICATION

A. General: Provide testing in accordance with NETA requirements, as specified under individual equipment and system specifications and as follows:

1. Upon completion of the work, and as a condition for acceptance, test all components and systems in the presence of the Owner's representative to demonstrate compliance with the specifications. Provide tests as specified and as required by the code or enforcing authorities. Adjust, repair and/or replace defective material and equipment.

2. Provide supervisory personnel experienced with the particular systems involved, and where specified, arrange for the presence of factory representatives to direct indicated testing. Check all field connections prior to testing.

3. Provide all required testing instruments and pay all costs for testing and for any resulting repair or replacement.

4. Tighten all bolted connections and meggar all equipment and bus prior to testing.

5. Tabulate all test data and prepare certified typewritten report covering all testing performed and include in Operating and Maintenance Instruction Manual(s).

B. Test and Measurements: Include all required factory service engineering time to cover the outline testing. Submit a per diem cost to cover additional testing which may be requested.

C. Ground Resistance: Test ground resistance at service, substation, generator, and at the secondary of each transformer, sized 75 KVA and larger. Perform test in accordance with the latest edition of James G. Biddle manual on "Earth Resistance Testing" and describe tests and results in test report. Where ground resistance is in excess of specified values, add ground electrodes as required to meet specifications. Perform tests before associated slabs are poured so that corrective measures are not precluded.

D. Switchboards:

1. For each building service switchboard and switchboard served from separately derived systems (generator, transformer) isolate neutral bus from ground by removing neutral bus from ground by removing neutral bus link and test neutral bus for infinite resistance. It may be necessary to disconnect DC inverters. Correct all unintentional neutral grounding and repeat test until infinite resistance is obtained. Submit test report. Reinstall bus links.

2. Set, test and operate each operable device.

E. For motors served from motor starters provide under this section, provide certified listing of nameplate motor data along with overloads provided in associated starters. Replace overloads as required for code compliance. Include list in Operating and Maintenance Instruction Manual.

F. Ground Fault Detectors: Verify proper neutral grounding and installation of ground fault detector. In zero sequence system, neutral and phase conductors to pass through sensor in same direction and equipment ground to be outside sensor. Test operation of each detector using factory authorized test equipment.

G. Metering: Demonstrate operation and set zero adjustment.

H. Conductors: Test for continuity, proper neutral connection, short circuit and improper ground. Meggar all feeders with switchboards and/or panels connected, but with branch loads disconnected, and meggar circuits for 20 HP and larger motors. Insulation resistance to be not less than cable manufacturer's recommendation.

I. Panelboards: Test with main disconnect open, branch circuits connected, wall switches closed, lighting fixtures and/or outlets permanently connected, without lamps, for neutral ground, short circuit, continuity, improper ground, and multiple neutral grounds.

J. Signal and Communication Systems: Factory engineer to test each system to demonstrate specified operation of all components. For code required systems arrange for code authorities to witness test.

K. Receptacles:

1. Verify that all receptacles are installed per manufacturer's instructions and terminal connections are secure and clean. Test for polarity.

2. With the Aid of a GFI Tester, Such as Hubbell #GFT2-G, Test GFI Receptacles:

   a. Hot - neutral - ground connections.

   b. At two and three milliamps respectively, GFI shall not trip within 10 seconds.

   c. At five milliamps, GFI shall trip within one second.

3. Test isolated ground receptacles for ground isolation.

L. Perform fluorescent troffer tests prior to installation.

M. Adjustments: After project loads are in full operation, and at a time acceptable to the Owner:

1. Take voltage readings at each transformer. Where voltage on secondary of building transformers is above or below required rating in excess of 2½ percent at full load, make appropriate tap changes.

2. Take current readings on each phase at each panel. Adjust branch circuiting between phases where required to balance phase currents within 10 percent. Reflect revisions in panel schedules. Circuit revisions shall not compromise multi-wire circuits sharing a common neutral.

3. Tabulate adjustment data by transformer and panel and submit with test data.

N. Thermographic Inspection:

1. After project loads are in full operation, perform a thermographic inspection of the electrical equipment and connections at a time acceptable to the Owner and in the presence of his authorized representative.

2. The inspection is to locate high resistive points by comparing temperature levels to reference temperatures.

3. Utilize an infrared camera with a range of -20°C to 900°C and an accuracy of 0.1°C. Equip camera with a minimum of three lenses: 7° telephoto, 20° wide angle and 4° extra wide angle. Utilize camera to detect infrared wave lengths and convert them into video signals projected onto a monitor screen in the form of a line thermal image to be photographed for inclusion in the report. Heat loss survey to be in both gray step mode and color.

4. Inspect the entire electrical system including:

   a. Transformers.

   b. Switchboard, panelboards.

   c. Circuit breakers, disconnect switches.

5. Include in test report thermographs and photographs of defective equipment and connections. Outline probable cause, severity of defect and corrective measure recommendations.

6. Correct deficiencies as agreed upon at no cost to owner. Rephotograph corrected areas and resubmit data indicating satisfactory condition.

END OF SECTION