CITY OF RIVERSIDE

CAPITAL IMPROVEMENT PROGRAM

Fiscal Year 2018/19 – 2022/23

Mayor
Honorable
William R. Bailey

City Council
Mike Gardner
Andy Melendrez
Mike Soubirous
Chuck Conder
Chris Mac Arthur
Jim Perry
Steve Adams

Submitted to the
City Council by:

City Manager's Office

NOTES

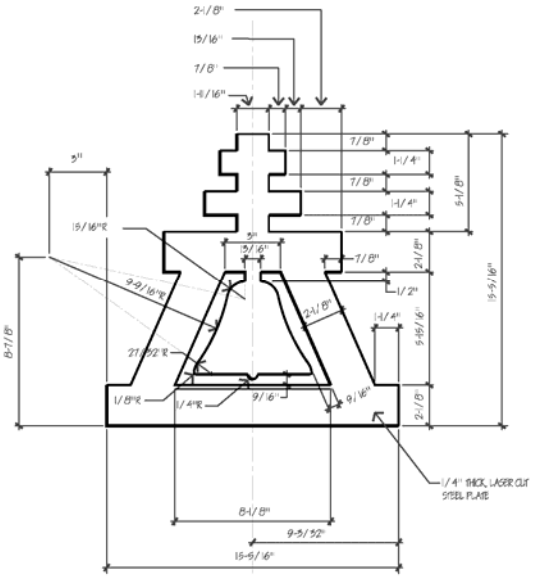
2-1/8"
15/16"
7/8"
1-11/16"
3"
15/16"R
9-9/16"R
8-7/8"
27-52"R
1/8"R
1/4"R
9/16"
9/16"
7/8"
1-1/4"
7/8"
1-1/4"
7/8"
5-1/8"
15/16"
7/8"
2-1/8"
1/2"
2-1/8"
1-1/4"
5-15/16"
2-1/8"
15-5/16"
1/4" THICK, LASER CUT STEEL PLATE
8-1/8"
9-5/32"
15-5/16"

Table of Contents

INTRODUCTION 1
City Manager's Message 3
Guide to the Capital Improvement Program 5

FINANCIAL SUMMARY 13
Financial Summary Narrative 15
Capital Improvement Plan Sources and Uses 23
Capital Improvement Projects by Funding Source 29
Revenue Summary by Fund 35

AIRPORT 37
Project Category Overview: Airport 39
Runway 16/34 Rehabilitation - 2666 43
Airport - Taxiway A Rehabilitation - 2667 44
Airport - Taxiway J Rehabilitation - 2668 45
Airport Facilities Terminal Patio Deck - 9034 46
Apron Asphalt Project Phase I - 9038 47
Airport Camera System - 9039 48

ELECTRIC 49
Project Category Overview: Electric 51
Distribution Line Extensions - 470601 57
Line Rebuilds – 470603 58
Street Lighting - 470607 59
System Substation Modifications - 470608 60
Transformers - 470611 61
Capacitors-Regulators - 470612 62
Meters - 470613 63
Substation Innovation - 470614 64
Services - 470615 65
Substation Bus & Upgrades - 470616 66
Major Overhead/Underground Conversions - 470619 67
Major Transmission Line Projects - 470620 68
General Order 165 (GO 165) Upgrades/Line Rebuilds/Relocation Overhead - 470623 69
GO 165 Upgrades/Line Rebuilds/Relocate - Underground - 470624 70
Major Tract Distribution - 470626 71
Substation Transformer Addition - 470632 72
Major Feeders - 470633 73
Southern California Edison (SCE) Condemnation Costs - 470634 74
Cable Replacement - 470635 75
Cable Replacement – Public Works Street Rehab - 470636 76
Major Street Light Projects - 470637 77
Neighborhood Street Light Retrofit - 470638 78
Major 4-12 kV Conversion - 470644 79
Distribution Automation/Reliability - 470655 80

Capital Improvement Program Two-Year Budget and Five-Year Plan

Citywide Communications - 470664 81
Supervisory Control and Data Acquisition (SCADA) - 470672 82
Riverside Transmission Reliability Project (RTRP) - 470685 83
RTRP – 230kV Reimbursable - 470686 84
Customer Information System (CIS) Upgrade - 470694 85
Geographic Information System (GIS) Upgrade - 470696 86
Dark Fiber - 470698 87
Enterprise Operation Data Mgmt System - 470822 88
Advanced Metering Infrastructure - 470823 89
Operational Technology Governance - 470824 90
Work, Asset, and Inventory Management System - 470825 91
Network Communication System - 470826 92
Land Mobile Radio - 470827 93
Outage Management System - 470829 94
Advanced Distribution Management System - 470830 95

INNOVATION AND TECHNOLOGY 97
Project Category Overview: Innovation and Technology 99
Data Network Replacement - 9022 103

MUNICIPAL BUILDINGS AND FACILITIES 105
Project Category Overview: Municipal Buildings and Facilities 107
Fleet Methane Detection System - 4085 111
Ethanol (E85) Fueling Station - 8598 112
Security Improvements - 8960 113
La Sierra Library Air Handler and Heating Units - 8961 114
Facility Roof Repairs – 8962 115
Cheech Marin Center for Chicano Art - 9016 116
Metro Museum Expansion and Rehabilitation - 9017 117
Police Headquarters - 9018 118
City Buildings Deferred Maintenance - 9019 119
Downtown Parking Garage - 9037 120
Downtown Library - 9905 121

PARKS, RECREATION, AND COMMUNITY SERVICES 123
Project Category Overview: Parks, Recreation, and Community Services 125
Arlington Youth Innovation Center - 2560 129
Nichols Community Center Renovation - 2569 130
El Dorado Park Walking Path - 2572 131
Hunter Park - Railroad Kiosk - 2600 132
Martha Mclean Anza Narrows - Frisbee Golf Course - 2601 133
Goeske Senior Center - Restroom Renovation - 2602 134
Myra Linn Park - Access Improvements - 2604 135
Myra Linn Park - Shade Sails - 2606 136
Myra Linn Park - Fitness Stations - 2608 137

Table of Contents

La Sierra Park ADA Walkway - Phase I - 2609 138
Fairmount Park Signage - 2641 139
Bordwell Park - Floor Replacement - 2642 140
Villegas Park - Wading Pool Design - 2643 141
La Sierra Park ADA Walkway - Phase II - 2646 142
Mt. Rubidoux Trail Improvements - 8952 143
Carlson Park Historic Falls Restoration - 8957 144
Parks Master Plan Update - 9003 145

PUBLIC PARKING 147
Project Category Overview: Public Parking 149

RAILROAD-RELATED 153
Project Category Overview: Railroad-Related 155
BNSF/UP Quiet Zone - Panorama & Cridge - 5934 159
BNSF Quiet Zone - Mission Inn, 3RD, & Spruce - 8610 160
UP Quiet Zone - Brockton and Palm - 8721 161
BNSF/Third Street Railroad Crossing - 8914 162
BNSF Third Street Grade Separation - 9901 163

SEWER 165
Project Category Overview: Sewer 167
Secondary System Upgrades - 7138 171
Tequesquite/Arroyo Trunk Line - 7709 172
Collection System Upgrades - 7989 173
RWQCP Rehabilitation - Phase II - 8015 174
Dewatering Screw Presses - 8586 175
WQCP Levee Upgrade - 8588 176
Tertiary System Rehab - Phase I - 8613 177
Bio-Solids Handling Rehabilitation - 8928 178
Spruce B & C Sewer Construction - 8939 179
Tequesquite A, B, and C Sewer Construction - 8941 180
Wastewater Lift Stations - 8943 181
Plant 2 Blower No.2 Rehab/Replacement - 8977 182
Plant 2 Activated Sludge Rehab - Phase I - 9045 183

STORM DRAIN 185
Project Category Overview: Storm Drain 187
Miscellaneous Storm Drain Construction - 7001 191
Cochran Storm Drain Project - 8980 192
Monroe Storm Drain Project (Lines E2, E3, E5) - 8997 193
Fairview & Cornwall Storm Drain Project - 9020 194

TRANSPORTATION 195
Project Category Overview: Transportation 197
Misc Street Construction Program - 5070 203

Capital Improvement Program Two-Year Budget and Five-Year Plan

Controller Assembly Replacement - 5183 204
Spread Spectrum Radio Replacement - 5846 205
Traffic Signal Loop Replacement Program - 5847 206
Miscellaneous Signal Revisions Program - 5861 207
Arterial Interconnect Program - 5862 208
Canyon Crest Widening - 5876 209
Traffic Management Center - 5931 210
Jurupa Avenue Extension - 5984 211
New Traffic Signals Program - 8341 212
LED Signal Lenses Replacement Program - 8619 213
Mission Boulevard Bridge Replacement at Santa Ana River - 8629 214
Market Street Bridge Replacement Over the Santa Ana River - 8699 215
University Avenue Fiber Optic - 8711 216
Arlington Avenue Improvements - 8723 217
Adams Street/State Route 91 Interchange Improvements - 8821 218
Citywide Bike Share Program - 8823 219
Magnolia Avenue Widening from Buchanan Street to Hole Avenue- 8824 220
Miscellaneous Traffic Projects - 8832 221
Major Streets Rehabilitation - 8880 222
Curb and Gutter Repair Program - 8883 223
Minor Street Rehabilitation Program - 8884 224
Sidewalk/Trail Construction Program - 8885 225
Sidewalk Repair Program - 8886 226
Pedestrian Ramps Program - 8887 227
CDBG Street Improvements - Matching Funds - 8888 228
Norte Vista Sidewalk Improvements - 8889 229
Wells and Arlanza Sidewalk Project - 8890 230
Downtown Bicycle & Pedestrian Improvements - 8891 231
Minor Street Preservation Program (Slurry/ARAM) - 8894 232
Van Buren Blvd Widening - 8926 233
Central/Canyon Crest/Watkins Bike Lanes - 8935 234
High Friction Surface and Hawk Signals - 8936 235
Monroe Rehab-Lincoln to Arlington - 8937 236
San Andreas Drainage Improvements - 8959 237
Indian Hill Road Slope Mitigation Project - 8990 238
Iowa Avenue Widening - 8998 239
RTA Bus Pad Construction - 9006 240
Active Transportation Master Plan - 9023 241
Interconnected Traffic Signal Controller Replacement - 9024 242
Measure Z Pavement Rehabilitation and Pedestrian Facilities Improvement Program - 9026 243
SB-1 Pavement Rehabilitation, Maintenance, and Safety Improvements Program - 9028 244

Table of Contents

WATER 245
Project Category Overview: Water 247
Distribution Automation/Reliability - 470655 253
System Expansion - 470701 254
Meters - 470702 255
Water Stock - 470705 256
Distribution System Facilities Replacements - 470706 257
Main Replacements Program - 470707 258
Transmission Mains - 470735 259
Pump Station Replacements - 470802 260
Facility Rehabilitation Program - 470803 261
Recycled Water (Jackson St. Phase I – Facilities and Site Conversions) 470811 262
Seven Oaks Dam Conservation – Enhanced Recharge - 470813 263
Aquifer Storage & Recovery System - 470814 264
Hydrant Check Valves - 470815 265
Upper Santa Ana River Habitat Conservation Plan - 470819 266
Enterprise Operation Data Mgmt System - 470822 267
Advanced Metering Infrastructure - 470823 268
Operational Technology Governance - 470824 269
Work, Asset, and Inventory Mgmt System - 470825 270
Network Communication System - 470826 271
Land Mobile Radio - 470827 272
Mobile Applications - 470831 273
SCADA Upgrade & System Automation - 470832 274
Potable/Irrigation Well Replacement - 470833 275

APPENDIX 277
Schedule of Unfunded Capital Projects 279
Capital Fiscal Policies 283
Planning Commission Action Items 286

GLOSSARY 305
Capital Improvement Program Glossary 307
Revenue Sources 311

INDEX 317
Alphabetical Index 319
Project Number Index 325

NOTES

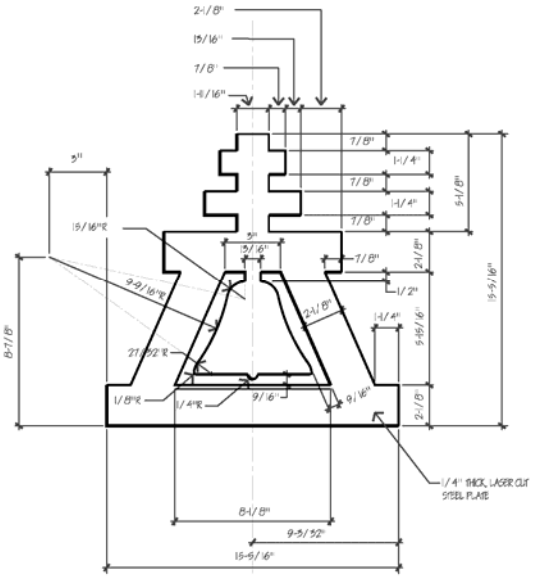
2-1/8"
15/16"
7/8"
1-11/16"
3"
15/16"R
9-9/16"R
8-7/8"
27-9/32"R
1/8"R
1/4"R
9/16"
9/16"
7/8"
1-1/4"
7/8"
1-1/4"
7/8"
5-1/8"
15/16"
7/8"
2-1/8"
1/2"
2-1/8"
1-1/4"
5-15/16"
2-1/8"
15-5/16"
1/4" THICK, LASER CUT STEEL PLATE
8-1/8"
9-5/32"
15-5/16"

CITY OF RIVERSIDE

CAPITAL IMPROVEMENT PROGRAM

INTRODUCTION

NOTES

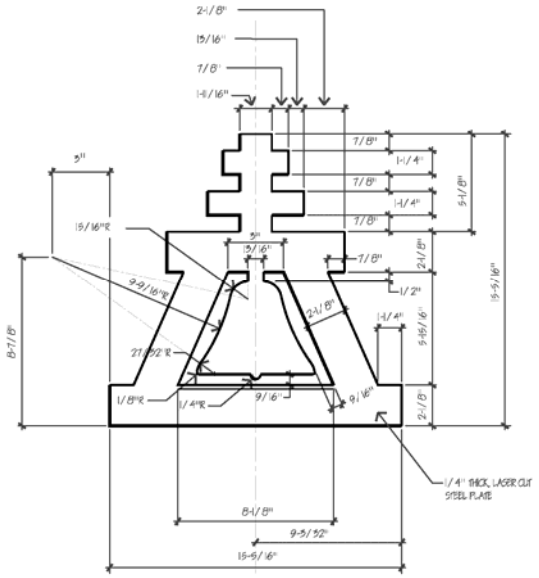
2-1/8"
15/16"
7/8"
1-11/16"
3"
15/16"R
9-9/16"R
8-7/8"
27-52"R
1/8"R
1/4"R
9/16"
9/16"
7/8"
1-1/4"
7/8"
1-1/4"
7/8"
5-1/8"
7/8"
2-1/8"
1/2"
1-1/4"
5-15/16"
2-1/8"
15-9/16"
1/4" THICK, LASER CUT STEEL PLATE
8-1/8"
9-5/32"
15-9/16"

Office of the City Manager

City of Arts & Innovation

May 1, 2018

Honorable Mayor and City Council Members
City of Riverside
3900 Main Street
Riverside, CA 92522

Capital Improvement Program Two-Year Budget for Fiscal Years 2018/19 and 2019/20, and 2022/23 Five-Year Plan

Honorable Mayor and City Council Members,

We are pleased to present to you a Two-Year Budget and Five-Year Plan for the City's Capital Improvement Program (CIP). The CIP provides funding for the City's critical and essential infrastructure projects in the amount of $81,169,168 for Fiscal Year (FY) 2018/19 and an additional $73,027,769 for FY 2019/20. Over the course of five years (FY 2018/19 through FY 2022/23), the City anticipates investing a total of $426,784,155 in our essential assets.

With the approval of the City's one-cent sales tax measure in November 2016 (Measure Z), the City made a commitment to continue investing in our critical infrastructure, such as roads and sidewalks, essential facilities, and our first responder fleet. This CIP ensures the City follows through on those promises by providing funding for priority projects throughout the City, including a new Downtown Main Library and City History Archive ($43 million), new Police Headquarters ($35 million), and street improvements ($14 million). Other needed projects such as deferred capital maintenance on City facilities, rehabilitation/expansion of the Metropolitan Museum and added public parking, are all planned to be funded with Measure Z tax revenues.

Recently, the City has been successful in funding projects through non-traditional methods. For example, the Cheech Marin Center for Chicano Art Culture and Industry will be housed in the current historic Main Library location next to the Mission Inn, following the construction of the Main Library site west of Market Street. The $10 million capital project, which will showcase the world's largest Chicano art collection, will be completely funded through private fundraising and includes $1 million in State funds.

There are projects determined to be high priority that remain unfunded. For example, the Tyler Street/SR-91 Interchange and Adams Street/SR-91 Interchange represent two of Transportation's highest priority projects; and Parks, Recreation, and Community Services needs $25 million for its high priority projects. The General Fund is unable to contribute funds for capital projects as it continues to face challenges with rising Public Employee Retirement (PERS) costs. Most other

revenue sources, such as rate revenues from water, electric, and wastewater utilities, are restricted to be used on specific types of projects. The City will continue to aggressively pursue grants and work with local, state and federal agencies as well as private partners to fund critical capital projects in our community.

The City's key budgetary themes include financial accuracy, financial responsibility/discipline, maintaining essential services/infrastructure, and ensuring a transparent/participatory budget process. This CIP document builds on the City's recent financial successes, by incorporating best practices offered by the Government Finance Officers Association (GFOA) and the California Society of Municipal Financial Officers (CSMFO). Based on recommendations developed by the City Manager's Office and Finance Department, the City Council adopted two new policies to establish the framework for future capital budgets.

The first policy, Multi-Year Capital Planning, establishes guidelines that help the City identify and prioritize expected capital needs based on strategic priorities and operational needs, establish project scope and cost, detail estimated amounts of funding from various sources, and project future operating and maintenance costs. The second policy, Prioritization of CIP, establishes an objective process of prioritizing capital improvement projects to ensure consistency with the General Plan, in conjunction with the biennial budget process, or otherwise as capital funding becomes available.

With adoption of this CIP, the City will apply for CSMFO's Excellence in Capital Budgeting Award for the first time in the City's history. The program is specific to the Capital Budget and has forty-nine requirements that need to be incorporated to qualify for the award. The award is based on best practices and further advances our commitment to be more transparent and accountable to the Riverside community. Staff is confident that this CIP document will be a valuable tool for understanding the infrastructure priorities, successes and challenges that face our City over the next five years.

Thank you for your continued support of City staff's efforts to deliver thoughtfully developed, transparent and balanced budgets that reflect not only our funded programs and projects, but also a long list of unfunded priorities.

On behalf of the City's management team and Finance staff –

City Manager's Office

Guide to the Capital Improvement Program

Capital Improvement Program

The City of Riverside's Capital Improvement Program (CIP) is a multi-year financial plan for the repair, replacement, and/or construction of municipal facilities and infrastructure. The City's CIP Plan strategically identifies both funded and unfunded capital improvement projects over a period of five years.

This year marks the first time the CIP serves as an actual budget document for the purpose of allocating total capital funding approved in the 2018/19 – 2019/20 Biennial Operating Budget to specific capital projects. Appropriations in the first two years of the CIP will be allocated to the Fiscal Year 2018/19 and 2019/20 projects with the adoption of CIP Budget by City Council.

Capital Improvement Project Defined

A capital improvement project is defined as a long-term investment of funds to improve, repair, or replace an existing capital asset and/or construct or acquire a new capital asset. A capital project is a city resource and/or property with a monetary value of at least $20,000 and an initial useful life of at least 10 years. For the purpose of this CIP, the City's capital assets include municipal facilities and/or public infrastructure broadly categorized as airport; municipal buildings; technology infrastructure; parks, recreational, and cultural facilities; transportation infrastructure and systems (including streets, railroads, and parking structures); public utilities (including electric, water, sewer); and storm drain systems.

Benefits of the Capital Improvement Program

As stewards of public trust, staff has an obligation to be good custodians of the City's capital assets by keeping them safe and in optimal working condition. In doing this, the municipal facilities and public infrastructure are fully utilized to provide exemplary services for the maximum benefit to the citizens and the community at large.

Guide to the Capital Improvement Program

The CIP provides the following primary benefits:

- Enhances the safety and health of the citizens by providing the infrastructure for first responders and caregivers that bring aid and care where and when its most needed;
- Improves the quality of life of the community by providing fair, transparent, and equitable access to services;
- Improves the livability conditions of the neighborhoods by providing mobility to attend events and cultural affairs;
- Focuses resources on achieving citywide priorities and meeting citizen expectations;
- Provides a transparent and predictable implementation framework for the General Plan, Specific Plan, and Citywide Riverside Strategic Plan 2.1;
- Fosters inter-departmental coordination of City infrastructure investments; and
- Promotes accountability and provides leverage for the long-term planning and investment of public funds for large-scale public purposes.

Capital improvement projects typically carry considerable future impact because they have an expected life span of 10 years or more. They are often, but not always, financed over a longer period of time, in effect spreading the cost of the project across generations of users. In this sense, the choices made for how a project is prioritized, financed, and constructed is not only a question of fiscal capacity and prudence, but a philosophical issue that reflects the values of the City.

Guide to the Capital Improvement Program

Timeline for Adoption of the Capital Improvement Program

The CIP includes a two-year budget and a five-year financial plan for projects intended to meet the City's current or anticipated capital needs, the funding sources (if available), and the project delivery timeframe. Capital improvement programming is the process by which these capital projects are identified, prioritized, and incorporated into the long-range fiscal and strategic planning of the City.

The adoption of the CIP is a participatory and transparent process, which is aided by publishing the schedule of events early. The Capital Budget was presented to the Budget Engagement Commission and City Council, both televised to the public, which provided a platform for the Riverside community to be part of the process. Additionally, staff visited each ward to discuss budget related matters, including the CIP.

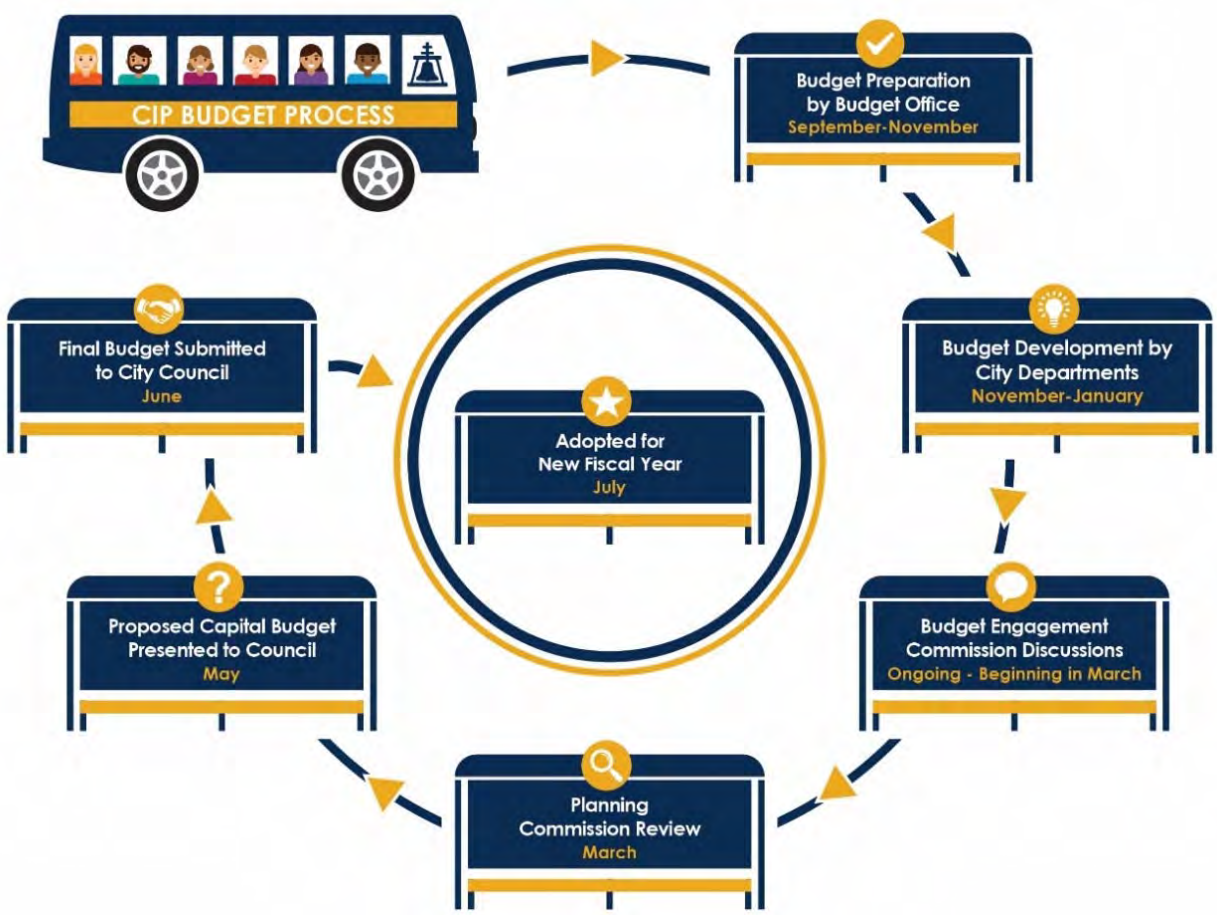

Guide to the Capital Improvement Program

Department Roles and Prioritization of Capital Projects

The development and adoption of the CIP involved the following departments in their respective roles:

DEPARTMENT ROLES

General Services
Plans, designs, repairs, and/or builds capital projects for the City's airport, municipal buildings, and facilities.

Innovation & Technology
Plans, designs, repairs, and/or builds capital projects for IT design, network management, and technology implementation in City facilities.

Parks, Recreation and Community Services
Plans, designs, repairs, and/or builds capital projects in City parks and recreation centers.

Public Utilities
Plans, designs, repairs, and/or builds capital projects for the electric and water utility facilities and infrastructure.

Public Works
Plans, designs, repairs, and/or builds capital projects in the public right-of-way, including the transportation infrastructure, sanitary sewer system, storm drain system, public parking infrastructure, and railroad-related infrastructure.

Community & Economic Development
Reviews projects in the CIP to determine compliance with the California Environmental Quality Act (CEQA) and consistency with the General Plan; recommend its findings to the Planning Commission.

Finance
Coordinates and facilitates the CIP budget process from compiling financial data and project information, to preparing the budget document for City Council adoption.

Projects to be funded in the CIP were reviewed by departments and marked as satisfying all prioritization categories that applied.

Prioritization Categories

- Risk to Health, Safety and Environment
- Regulatory or Mandated Requirements
- Asset Condition, Annual Recurring Costs and Asset Longevity
- Community Investment and Economic Prosperity
- Level and Quality of Service
- Sustainability and Conservation
- Funding Availability
- Project Readiness
- Multiple Category Benefit and Bundling Opportunities

Guide to the Capital Improvement Program

The prioritization categories provided an objective process of prioritizing capital projects to ensure consistency with the General Plan and the strategic goals of the City. The City used the nine prioritization categories based on the Prioritization of Capital Improvement Projects fiscal policy adopted by City Council on March 22, 2018.

Conformance with the General Plan

After significant internal and external review, to ensure compliance w/ applicable CIP fiscal policies, departments submitted their CIP project lists to the Finance Department. The Finance Department, in conjunction with the Community and Economic Development Department's Planning Division, presented all capital projects requesting funds in the first two years of the plan to the Planning Commission for review to determine consistency of the planned capital projects with the General Plan and compliance with CEQA.

On March 20, 2018, the Planning Commission reported to the City Council that the CIP is consistent with the City's General Plan and determined that the planned CIP projects are exempt from CEQA.

The remaining three fiscal years, 2020/21 through 2022/23, reflect staff's recommendation to fund higher priority projects and/or are a continuation of projects that span more than one year. These projects are subject to review and revision each year by the City Council as part of the CIP mid-cycle update or biennial CIP Budget.

The CIP Mid-Cycle Update

Updates to the CIP are made on an annual basis to reflect changes in funding, changes in project priorities, and the addition of new projects occurring during the two-year budget cycle. Similar to the biennial budget, the CIP Mid-Cycle Update is submitted to City Council for approval and for the appropriation of funds. This occurs at the end of the first year of the two-year budget.

Amending the Capital Improvement Program Budget

At any City Council meeting after the adoption of the budget, the City Council may amend or supplement the budget by motion adopted by the

Guide to the Capital Improvement Program

affirmative votes of at least five members. This vote authorizes the transfer of unused balances appropriated for one purpose to another purpose, or to appropriate available funds not included in the budget.

Once approved, appropriations for capital projects are continued for the life of the project (i.e. continuing appropriations). Unused funds will return to fund balance when projects are completed and closed or at the discretion of the City or the City Council.

Document Organization

The City of Riverside's Capital Improvement Program includes six primary sections:

- **Introduction** – Contains the City Manager's Transmittal Letter and the Guide to the CIP. The City Manager's Transmittal Letter provides an executive summary of the CIP and discusses policy, economic, and/or legislative issues facing the City and their impact on the budget. It also highlights major capital project priorities and their funding source. The Guide to the CIP defines a capital project, explains the benefits of the CIP, outlines the budget process, and describes the document's organization, and project categories.

- **Financial Summary** – Contains an overview of the CIP, provides financial highlights, describes major capital revenue sources and basis for estimates, includes a financial schedule containing a five-year outlook for each fund in the CIP based on revenue and expenditure estimates, a schedule of revenue estimates by fund, and a detailed schedule of expenditures by fund for each capital project.

- **Project Categories** – Contains Project Category Overviews and individual project pages. The Project Category Overviews include; general descriptions of the project category, narratives of proposed two-year budget and five-year plan, project highlights, table of key revenue and funding sources with discussion of alternative funding, summary schedule of funded projects by major type of improvement, schedule of the top ten unfunded projects in order of priority, and a city map which maps all projects in the CIP that are specific to a single location. Citywide and ongoing projects with multiple locations are not mapped.

Guide to the Capital Improvement Program

- **Appendix** – Contains supplementary information, including a comprehensive list of unfunded capital projects, action items from oversight boards, and policies.

- **Glossary** – Contains a list of terms or words found in text or are related to the capital budgeting process. Descriptions of funds found in the document are included in the Revenue Sources schedule.

- **Index** – Two indexes are provided to identify the page numbers or items contained within the document, an alphabetical index of all contents, and an index specific to capital projects and sorted by project number.

CIP Project Categories

Capital projects are grouped into the following eleven project categories:

- ***Airport*** - The Airport section includes projects to maintain the Airport, to improve safety, and to comply with Federal Aviation Administration (FAA) standards and regulations.

- ***Electric*** *- The Electric section includes projects to construct or maintain electric utility infrastructure and facilities.*

- ***Innovation and Technology*** *- The Innovation and Technology section includes projects for IT design, network management, and technology implementation in City facilities.*

- ***Municipal Buildings and Facilities*** *- The Municipal Buildings and Facilities section includes expenditures for general municipal projects and projects not otherwise included in other sections of the CIP. Projects may include new construction of buildings such as police and fire stations, libraries, and parking structures or major repairs, additions, and alterations of existing assets.*

- ***Parks, Recreation, and Community Services*** *- The Parks, Recreation, and Community Services section includes projects to construct, maintain, and upgrade parks, game courts and fields, community centers, and recreation buildings.*

- ***Public Parking*** *- The Public Parking section includes projects to construct new parking facilities and to improve existing facilities.*

Guide to the Capital Improvement Program

- ***Railroad-Related*** *- The Railroad section includes projects related to Burlington North Santa Fe (BNSF) and Union Pacific railroads. These projects include grade separations and Quiet Zone improvements.*

- ***Sewer*** *- The Sewer section includes projects to increase system capacity for new users, replace aging or obsolete systems, and meet new regulatory requirements.*

- ***Storm Drain*** *- The Storm Drain section includes projects that either eliminate a nuisance flow or provide additional flood protection.*

- ***Transportation*** *- The Transportation section includes projects to extend and widen streets, street resurfacing, construction of curbs, gutters, center medians, bikeways and pedestrian facilities, right-of-way acquisition, and traffic signal improvements.*

- ***Water*** *- The Water section includes projects to construct or maintain water utility infrastructure and facilities.*

CITY OF RIVERSIDE

CAPITAL IMPROVEMENT PROGRAM

FINANCIAL SUMMARY

NOTES

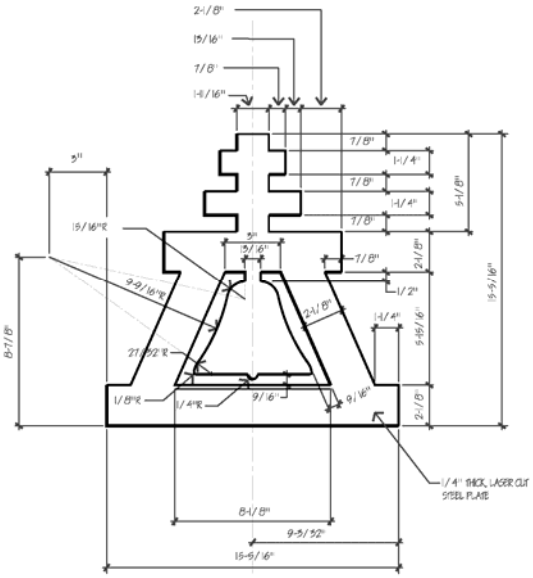
2-1/8"
15/16"
7/8"
1-11/16"
3"
15/16"R
9-9/16"R
8-7/8"
27-9/32"R
1/8"R
1/4"R
9/16"
9/16"
7/8"
1-1/4"
7/8"
1-1/4"
7/8"
5-1/8"
3"
15/16"
7/8"
2-1/8"
1/2"
2-1/8"
1-1/4"
5-15/16"
15-9/16"
2-1/8"
1/4" THICK, LASER CUT STEEL PLATE
8-1/8"
9-9/32"
15-9/16"

Financial Summary

Financial Overview

The Capital Improvement Program provides for the appropriation of $81,169,168 in Fiscal Year 2018/19 and $73,027,769 in Fiscal Year 2019/20 for new projects and additions to existing projects, and has $272,587,218 planned for the remaining three years. The program currently has $241,828,648 in previously appropriated projects that will be continued for a total Capital Improvement Program of $668,612,803 through Fiscal Year 2022/23. There are a total of 84 projects requesting funds in first year and 89 projects in the second year. Funding for these projects is provided by a variety of funding sources including development impact fees, transportation funds, grants, reimbursement agreements, and long-term financing which are restricted for the purposes for which they are budgeted. These funds, for the most part, cannot be used for ongoing City operations.

The following is a summary of the Sources and Uses of Funding for the first two years of the plan:

Sources:	**2018/19**	**2019/20**
Electric Utility	32,657,664	34,651,602
Water Utility	22,799,458	18,903,354
Transportation Funds	16,537,393	13,974,224
Measure Z Capital	5,729,554	4,628,198
Sewer (Bond Proceeds)	1,966,761	709,343
Other	1,478,338	161,048
Total Sources	**$81,169,168**	**$73,027,769**

2018/19

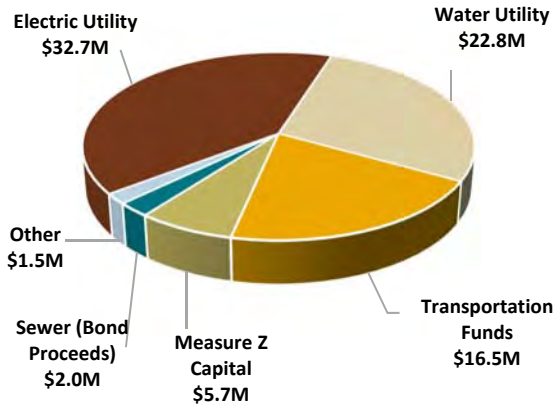

2019/20

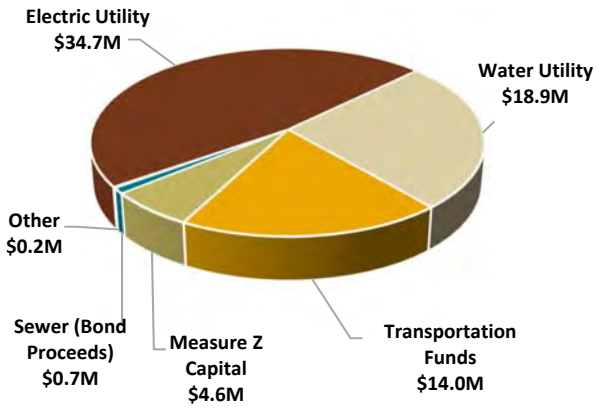

Financial Summary

Uses:	2018/19	2019/20
Airport	259,075	-
Electric Utility	32,390,952	34,416,523
Innovation and Technology	1,356,097	1,195,256
Municipal Buildings and Facilities	2,100,000	1,000,000
Railroad	1,065,669	757,500
Sewer	1,900,000	650,500
Storm Drain	1,050,000	100,000
Transportation	18,346,724	16,091,724
Water	22,700,651	18,816,266
Total Sources	**$81,169,168**	**$73,027,769**

2018/19

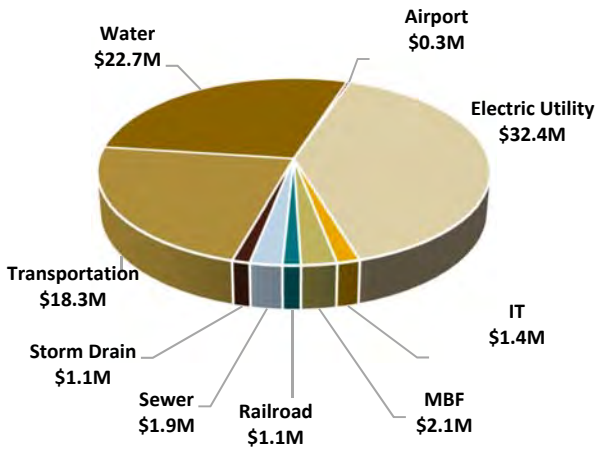

2019/20

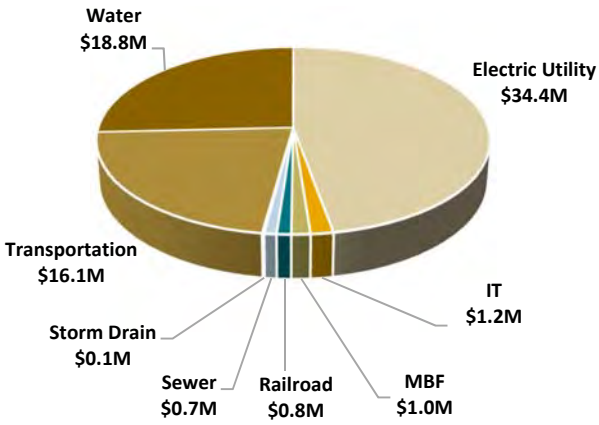

Financial Summary

Five-Year Plan Summary Schedules

FUNDED PROJECTS BY DEPARTMENT

Department	Proposed 2018/19	Proposed 2019/20	Proposed 2020/21	Proposed 2021/22	Proposed 2022/23	Total
General Services	2,359,075	1,000,000	1,084,975	1,041,250	1,005,500	$6,490,800
Innovation and Technology	1,356,097	1,195,256	420,382	-	-	$2,971,735
Parks, Recreation, and Community Services	-	-	-	-	-	$0
Public Utilities	55,091,603	53,232,789	72,322,540	66,369,857	78,522,716	$325,539,505
Public Works	22,362,393	17,599,724	19,541,066	16,206,566	16,072,366	$91,782,115
TOTAL	**$81,169,168**	**$73,027,769**	**$93,368,963**	**$83,617,673**	**$95,600,582**	**$426,784,155**

FUNDED PROJECTS BY PROJECT CATEGORY

Project Category	Proposed 2018/19	Proposed 2019/20	Proposed 2020/21	Proposed 2021/22	Proposed 2022/23	Total
Airport	259,075	-	84,975	41,250	5,500	$390,800
Electric	32,390,952	34,416,523	38,468,201	42,717,438	48,432,978	$196,426,092
Innovation and Technology	1,356,097	1,195,256	420,382	-	-	$2,971,735
Municipal Buildings and Facilities	2,100,000	1,000,000	1,000,000	1,000,000	1,000,000	$6,100,000
Parks, Recreation, and Community Services	-	-	-	-	-	$0
Railroad	1,065,669	757,500	772,700	788,200	804,000	$4,188,069
Sewer	1,900,000	650,500	3,000,000	-	-	$5,550,500
Storm Drain	1,050,000	100,000	100,000	100,000	100,000	$1,450,000
Transportation	18,346,724	16,091,724	15,668,366	15,318,366	15,168,366	$80,593,546
Water	22,700,651	18,816,266	33,854,339	23,652,419	30,089,738	$129,113,413
	$81,169,168	**$73,027,769**	**$93,368,963**	**$83,617,673**	**$95,600,582**	**$426,784,155**

Although Parks, Recreation, and Community Services has no funding identified in the CIP, they are aggressively pursuing alternative funding sources for their capital projects. They submitted applications to be awarded Community Development Block Grant (CDBG) funds for multiple projects and are waiting to receive results. There is also the possibility of utilizing Arlington Tax Exempt bond funds for the Arlington Youth Innovation Center. Staff is anticipating the passage of Proposition 60, Park Bond Legislation, and if it passes, staff will pursue those funds as a source for critical park projects.

Funded Projects by Ward

The following map identifies the location of all funded single-location projects in the CIP. Many projects in the CIP are located throughout the City (Minor Streets Rehabilitation Program) and benefit multiple wards.

Financial Summary

CITYWIDE MAP OF FUNDED PROJECTS

(excludes citywide projects)

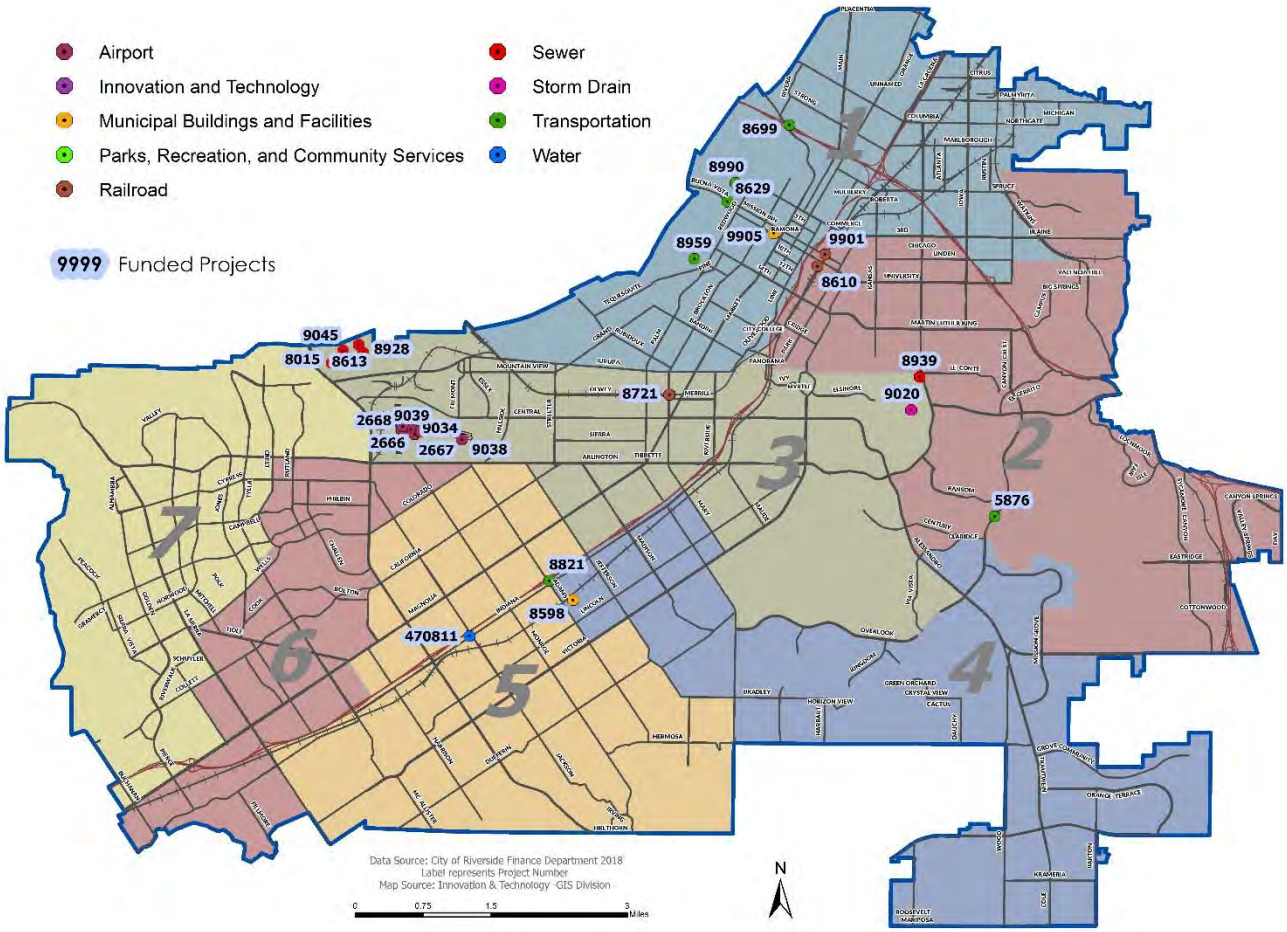

Note: This map includes all active and new capital improvement projects. Ongoing and citywide projects are not included on the map. To view additional information and detailed maps, please visit the City's website at https://riverside.openbook.questica.com.

DISTRIBUTION BY WARD

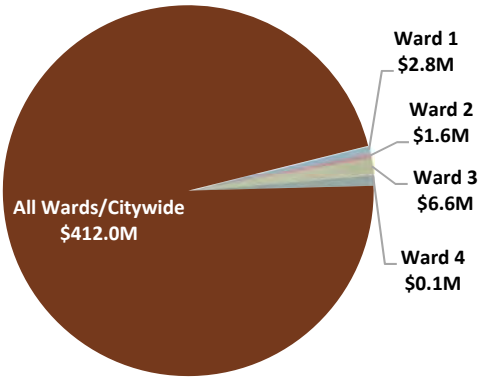

Ward	Five-Year Total
Ward 1	2,835,000
Ward 2	1,560,000
Ward 3	6,613,300
Ward 4	100,000
Ward 5	-
Ward 6	-
Ward 7	-
All Wards/Citywide	411,973,513
TOTAL	**$ 426,784,155**

Financial Summary

Unfunded Capital Improvement Projects

The City has identified $693.5 million in needed projects that currently remain unfunded. Each budget cycle departments review the estimated project cost and adjust the unfunded amount as necessary. The list will be updated as funding becomes available and as new projects are identified. A complete list of these projects are contained in the Appendix.

UNFUNDED PROJECTS BY DEPARTMENT

Department	Estimated Project Cost	Unfunded Amount
General Services	35,090,157	34,750,157
Innovation and Technology	31,445,900	28,474,165
Parks, Recreation, and Community Services	25,747,150	25,627,150
Public Utilities	278,398,659	161,172,248
Public Works	460,439,525	443,433,783
TOTAL	**$831,121,391**	**$693,457,503**

Examples of the most significant unfunded projects and their estimated total project costs include:

- Riverside Transmission Reliability Project (RTRP) (Electric Utility) - $162,756,354
- Tyler Street/SR-91 Interchange - $75,000,000
- Adams Street/SR-91 Interchange - $72,900,000
- Third Street Grade Separation at BNSF Railroad Crossing - $45,000,000
- Van Buren Widening from Indiana to South City Limit - $26,640,352
- Eastside Library (New Construction) - $15,000,000
- Victoria Avenue Transmission Water Main - $5,000,000
- Tertiary System Rehabilitation - Phase II (Sewer) - $4,800,000
- Work-Order/Asset Management System Major Upgrades - $3,324,900
- BNSF Quiet Zone at Mission Inn, 3rd, and Spruce - $3,143,000
- Three Wading Pool Replacements - $1,250,000
- Cypress Avenue Storm Drain Project - $1,250,000
- Replacement of 32 Version 2 Luke Meters (Public Parking) - $400,000
- Plant 2 Activated Sludge Rehabilitation (Sewer) - Phase II - $199,500
- North Orange Street Storm Drain Project - $150,000

Financial Summary

Funding Sources

The City employs a combination of approaches to fund its capital projects. For many smaller improvement projects, funds are appropriated from cash on hand. Large-scale capital projects are funded through a variety of funding sources, including long-term financing, user fees, proceeds from bond issues, grants, assessments, impact fees, and certificates of participation (COPs). Since the City's various departments are budgeted within numerous funds, each potentially with multiple revenue streams, the CIP departments are responsible for managing the revenue and expenditure budgets of their projects.

Major Funding Sources for Capital Projects

Measure Z

On November 8, 2016, Riverside voters approved Measure Z, a general transaction and use tax of 1%, to help pay for critical unfunded City programs and services. Measure Z revenues are anticipated to be $52.0 million in Fiscal Year 2018/19 and $52.6 million in Fiscal Year 2019/20. Of these amounts, $5.7 million are earmarked for capital projects in Fiscal Year 2018/19, $4.6 million in Fiscal Year 2019/20 and a total of $11.9 million for fiscal years 2020/21 through 2022/23.

Certain Measure Z capital projects, such as the new Downtown Library, new Police Headquarters, Museum Expansion, and Downtown Parking Garage will be funded with bond proceeds in future years. The annual debt service for those bonds will be paid with the amounts allocated in the Measure Z Five-Year Plan.

Projects to be funded by regular annual Measure Z revenues (not bond proceeds) include the Data Network Replacement project, Pavement Rehabilitation and Pedestrian Facilities Improvement Program, and the City Buildings Deferred Maintenance project.

Gas Tax

The state of California imposes per-gallon excise taxes on gasoline and diesel fuel, sales taxes on gasoline and diesel fuel and registration taxes on motor vehicles with allocations dedicated to transportation purposes. These allocations flow through the Highway Users Tax Account (HUTA), the familiar gasoline tax revenues that have been in place for decades, and the Road Maintenance and Rehabilitation Account which allocates much of the revenue from the Road Repair and Accountability Act of 2017 (SB-1) to local agencies such as the City of Riverside.

Financial Summary

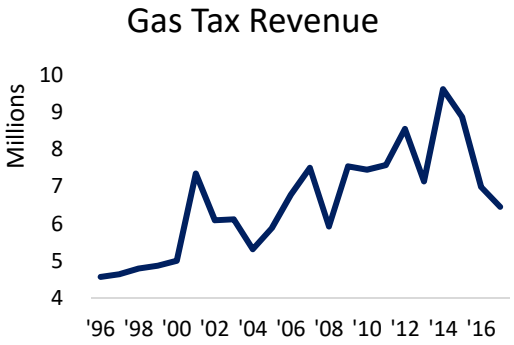

Revenue collected as part of SB-1, which took effect on November 1, 2017, includes an additional 12 cent per gallon increase to the gasoline tax, an additional 20 cent per gallon increase to diesel fuel excise tax (half going to the state Trade Corridor Enhancement Account (TCEA) and half to the Road Maintenance and Rehabilitation Account (RMRA)), and an additional vehicle registration tax based on the value of the motor vehicle (effective January 1 ,2018). Effective starting July 1, 2020 there will be an additional $100 vehicle registration tax on zero emissions vehicles.

Gas Tax continues to be the number one source of revenue for transportation projects. Revenue estimates for Fiscal Year 2018/19 are $12.1 million, which is 44% higher than Fiscal Year 2017/18 estimates of $8.4 million. The increase is mostly due to the additional revenue provided by SB-1, which is projected at $5.5 million in Fiscal Year 2018/19 based on CaliforniaCityFinance.com's Local Streets and Roads Estimates report updated on January 11, 2018. Without the additional fund provided by SB-1, Gas Tax revenues would remain relatively flat. Consumer demand for fuel-efficient vehicles and fuel prices are major drivers in determining the resulting revenue received from this funding source.

Measure A

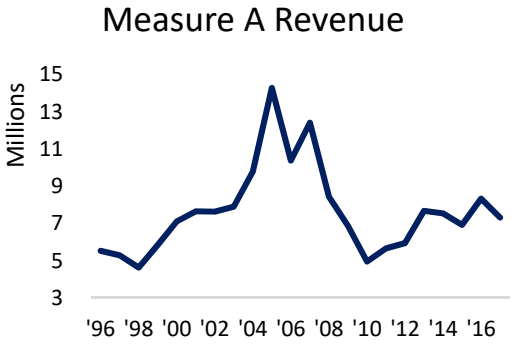

Voters approved a half-cent sales tax in Riverside County for transportation in 1988. Each year the Riverside County Transportation Commission (RCTC) allocates funds to local agencies to be used on specific capital projects pre-approved by RCTC. Measure A funds are restricted for use on transportation projects such as major highways, commuter rail, local streets and roads. The City estimates Measure A revenues based on a RCTC's Measure A Program Allocation (Projection) report issued each year. Estimates are provided through Fiscal Year 2022/23.

Financial Summary

Bond Proceeds

Issuing bonds provides sufficient funds up front and allows the City to complete projects sooner rather than accumulating funds over a longer period of time. It also matches the cost of the project to the generations that will benefit from them. Projects to be funded with bond proceeds in future years and the estimated amount to be used are identified on individual project pages. Identified amounts are not included in the summary schedules throughout the CIP since they will not appropriated with the adoption of the CIP. Staff will request appropriations for their projects after the bonds are issued and approved by City Council.

Grants

The City aggressively pursues grants to fund capital projects. Grants are vital to fund projects that have not alternative funding source. The Public Works Department recently received $1.8 million from the California Department of Transportation's Active Transportation Program (ATP) Grant for the Norte Vista Sidewalk Improvement project and General Services recently received $300 thousand for the Air Quality Management District (AQMD) Mobile Source Air Pollution Program Grant for Alternative Fuel Infrastructure.

The Community Development Block Grant Program provides annual grants to address a wide range of needs. Parks, Recreation, and Community Services is awarded funds for multiple capital projects each year and will continue to apply in future years.

Capital Improvement Plan Sources & Uses

Funding Source		2018/19				
		Estimated Available Balance[1]	Projected Revenue[2]	Projected Operating Expenditures	Capital Budget	Ending Available Balance
General Capital Funds						
420	Measure Z Capital	-	5,729,554	-	(5,729,554)	$0
	Total General Capital Funds	**-**	**5,729,554**	**0**	**(5,729,554)**	**$0**
Transportation Funds						
230	Gas Tax	1,086,895	12,031,724	(2,287,097)	(10,284,793)	$546,729
431	Transportation Projects	11,861	-	-	-	$11,861
432	Measure A	1,717,047	7,813,000	(3,473,988)	(4,692,600)	$1,363,459
433	Transportation DIF	1,649,888	330,000	-	(1,560,000)	$419,888
	Total Transportation Funds	**4,465,691**	**20,174,724**	**(5,761,085)**	**(16,537,393)**	**$2,341,937**
Grant Funds						
220	Community Development Block Grant	-	3,052,108	(3,052,108)	-	$0
	Total Grant Funds	**-**	**3,052,108**	**(3,052,108)**	**0**	**$0**
Enterprise Funds						
510	Electric Utility	121,589,077	479,010,932	(380,873,136)	(32,657,664)	$187,069,209
520	Water Utility	23,409,069	127,811,303	(69,091,191)	(22,799,458)	$59,329,723
530	Airport	731,513	1,343,000	(1,341,092)	(263,747)	$469,674
540	Refuse	4,707,173	23,053,635	(25,195,579)	(36,551)	$2,528,678
550	Sewer	55,351,313	66,847,305	(72,253,535)	(1,966,761)	$47,978,322
570	Public Parking	719,701	6,529,021	(6,871,821)	-	$376,901
	Total Enterprise Funds	**206,507,846**	**704,595,196**	**(555,626,354)**	**(57,724,181)**	**$297,752,507**
Other Sources						
240	Air Quality Management District	621,085	625,000	(400,126)	-	$845,959
410	Storm Drain DIF	1,004,323	192,500	(50,000)	(1,050,000)	$96,823
411	Special Capital Improvement	(391,841)	2,552,370	(2,552,370)	-	($391,841)
413	Regional Park Special Capital Imp	2,143,188	534,000	-	-	$2,677,188
640	Central Stores	5,317,573	1,399,708	(1,011,160)	(5,341)	$5,700,780
650	Central Garage	470,170	12,184,280	(12,761,146)	(122,699)	($229,395)
	Total Other Sources	**9,164,498**	**17,487,858**	**(16,774,802)**	**(1,178,040)**	**$8,699,514**
	TOTAL	**220,138,035**	**751,039,440**	**(581,214,349)**	**(81,169,168)**	**$308,793,958**

[1] All funds used beginning fund balance as part of the Estimated Available Balance calculation, except Enterprise funds, which used working capital.

[2] Enterprise funds include bond proceeds in the Projected Revenue column in the year bonds are planned to be issued.

Capital Improvement Plan Sources & Uses

Funding Source		2019/20				
		Estimated Available Balance[1]	Projected Revenue[2]	Projected Operating Expenditures	Capital Budget	Ending Available Balance
General Capital Funds						
420	Measure Z Capital	-	4,628,198	-	(4,628,198)	$0
	Total General Capital Funds	**-**	**4,628,198**	**0**	**(4,628,198)**	**$0**
Transportation Funds						
230	Gas Tax	546,729	12,031,724	(2,287,097)	(9,751,724)	$539,632
431	Transportation Projects	11,861	-	-	-	$11,861
432	Measure A	1,363,459	7,966,000	(3,476,738)	(4,222,500)	$1,630,221
433	Transportation DIF	419,888	330,000	-	-	$749,888
	Total Transportation Funds	**2,341,937**	**20,327,724**	**(5,763,835)**	**(13,974,224)**	**$2,931,602**
Grant Funds						
220	Community Development Block Grant	-	3,080,928	(3,080,928)	-	$0
	Total Grant Funds	**-**	**3,080,928**	**(3,080,928)**	**0**	**$0**
Enterprise Funds						
510	Electric Utility	187,069,209	390,350,694	(401,244,471)	(34,651,602)	$141,523,830
520	Water Utility	59,329,723	80,710,703	(73,540,230)	(18,903,354)	$47,596,842
530	Airport	469,674	1,378,025	(1,374,917)	(4,118)	$468,664
540	Refuse	2,528,678	23,096,435	(26,161,028)	(32,216)	($568,131)
550	Sewer	47,978,322	67,552,100	(70,845,911)	(709,343)	$43,975,168
570	Public Parking	376,901	6,649,218	(6,851,049)	-	$175,070
	Total Enterprise Funds	**297,752,507**	**569,737,175**	**(580,017,606)**	**(54,300,633)**	**$233,171,443**
Other Sources						
240	Air Quality Management District	845,959	625,000	(400,900)	-	$1,070,059
410	Storm Drain DIF	96,823	192,500	(50,000)	(100,000)	$139,323
411	Special Capital Improvement	(391,841)	2,488,885	(2,488,885)	-	($391,841)
413	Regional Park Special Capital Imp	2,677,188	534,000	-	-	$3,211,188
640	Central Stores	5,700,780	1,399,708	(953,112)	(4,707)	$6,142,669
650	Central Garage	(229,395)	12,403,626	(12,925,435)	(20,007)	($771,211)
	Total Other Sources	**8,699,514**	**17,643,719**	**(16,818,332)**	**(124,714)**	**$9,400,187**
	TOTAL	**308,793,958**	**615,417,744**	**(605,680,701)**	**(73,027,769)**	**$245,503,232**

Capital Improvement Plan Sources & Uses

Funding Source		2020/21				
		Estimated Available Balance[1]	Projected Revenue[2]	Projected Operating Expenditures	Capital Budget	Ending Available Balance
General Capital Funds						
420	Measure Z Capital	-	4,139,907	-	(4,139,907)	$0
	Total General Capital Funds	**-**	**4,139,907**	**0**	**(4,139,907)**	**$0**
Transportation Funds						
230	Gas Tax	539,632	12,108,366	(2,287,097)	(9,328,366)	$1,032,535
431	Transportation Projects	11,861	-	-	-	$11,861
432	Measure A	1,630,221	8,161,000	(3,475,738)	(4,237,700)	$2,077,783
433	Transportation DIF	749,888	330,000	-	-	$1,079,888
	Total Transportation Funds	**2,931,602**	**20,599,366**	**(5,762,835)**	**(13,566,066)**	**$4,202,067**
Grant Funds						
220	Community Development Block Grant	-	3,105,855	(3,105,855)	-	$0
	Total Grant Funds	**-**	**3,105,855**	**(3,105,855)**	**0**	**$0**
Enterprise Funds						
510	Electric Utility	141,523,830	398,948,245	(413,597,389)	(38,550,879)	$88,323,807
520	Water Utility	47,596,842	84,256,883	(75,563,509)	(33,884,968)	$22,405,248
530	Airport	468,664	1,378,025	(1,417,551)	(86,424)	$342,714
540	Refuse	(568,131)	23,140,185	(26,815,374)	(11,331)	($4,254,651)
550	Sewer	43,975,168	68,250,579	(68,064,968)	(3,020,696)	$41,140,083
570	Public Parking	175,070	6,781,992	(6,957,185)	-	($123)
	Total Enterprise Funds	**233,171,443**	**582,755,909**	**(592,415,976)**	**(75,554,298)**	**$147,957,078**
Other Sources						
240	Air Quality Management District	1,070,059	625,000	(401,950)	-	$1,293,109
410	Storm Drain DIF	139,323	192,500	(50,000)	(100,000)	$181,823
411	Special Capital Improvement	(391,841)	1,950,000	(1,797,460)	-	($239,301)
413	Regional Park Special Capital Imp	3,211,188	534,000	-	-	$3,745,188
640	Central Stores	6,142,669	1,399,708	(976,083)	(1,656)	$6,564,638
650	Central Garage	(771,211)	12,588,821	(13,125,234)	(7,036)	($1,314,660)
	Total Other Sources	**9,400,187**	**17,290,029**	**(16,350,727)**	**(108,692)**	**$10,230,797**
	TOTAL	**245,503,232**	**627,891,066**	**(617,635,393)**	**(93,368,963)**	**$162,389,942**

Capital Improvement Plan Sources & Uses

Funding Source		2021/22				
		Estimated Available Balance[1]	Projected Revenue[2]	Projected Operating Expenditures	Capital Budget	Ending Available Balance
General Capital Funds						
420	Measure Z Capital	-	3,875,000	-	(3,875,000)	$0
	Total General Capital Funds	**-**	**3,875,000**	**0**	**(3,875,000)**	**$0**
Transportation Funds						
230	Gas Tax	1,032,535	12,108,366	(2,287,097)	(9,328,366)	$1,525,438
431	Transportation Projects	11,861	-	-	-	$11,861
432	Measure A	2,077,783	8,361,000	(3,475,988)	(3,903,200)	$3,059,595
433	Transportation DIF	1,079,888	330,000	-	-	$1,409,888
	Total Transportation Funds	**4,202,067**	**20,799,366**	**(5,763,085)**	**(13,231,566)**	**$6,006,782**
Grant Funds						
220	Community Development Block Grant	-	3,135,067	(3,135,067)	-	$0
	Total Grant Funds	**-**	**3,135,067**	**(3,135,067)**	**0**	**$0**
Enterprise Funds						
510	Electric Utility	88,323,807	527,960,449	(413,277,485)	(42,717,438)	$160,289,333
520	Water Utility	22,405,248	155,123,983	(79,049,946)	(23,652,419)	$74,826,866
530	Airport	342,714	1,378,025	(1,466,627)	(41,250)	$212,862
540	Refuse	(4,254,651)	23,185,466	(27,449,841)	-	($8,519,026)
550	Sewer	41,140,083	68,920,306	(68,966,276)	-	$41,094,113
570	Public Parking	(123)	6,917,421	(7,094,328)	-	($177,030)
	Total Enterprise Funds	**147,957,078**	**783,485,650**	**(597,304,503)**	**(66,411,107)**	**$267,727,118**
Other Sources						
240	Air Quality Management District	1,293,109	625,000	(400,053)	-	$1,518,056
410	Storm Drain DIF	181,823	192,500	(50,000)	(100,000)	$224,323
411	Special Capital Improvement	(239,301)	1,950,000	(1,117,537)	-	$593,162
413	Regional Park Special Capital Imp	3,745,188	534,000	-	-	$4,279,188
640	Central Stores	6,564,638	1,399,708	(1,005,289)	-	$6,959,057
650	Central Garage	(1,314,660)	12,738,899	(13,499,470)	-	($2,075,231)
	Total Other Sources	**10,230,797**	**17,440,107**	**(16,072,349)**	**(100,000)**	**$11,498,555**
	TOTAL	**162,389,942**	**828,735,190**	**(622,275,004)**	**(83,617,673)**	**$285,232,455**

Capital Improvement Plan Sources & Uses

Funding Source		2022/23				
		Estimated Available Balance[1]	Projected Revenue[2]	Projected Operating Expenditures	Capital Budget	Ending Available Balance
General Capital Funds						
420	Measure Z Capital	-	3,875,000	-	(3,875,000)	$0
	Total General Capital Funds	**-**	**3,875,000**	**0**	**(3,875,000)**	**$0**
Transportation Funds						
230	Gas Tax	1,525,438	12,108,366	(2,287,097)	(9,328,366)	$2,018,341
431	Transportation Projects	11,861	-	-	-	$11,861
432	Measure A	3,059,595	8,566,000	(3,477,238)	(3,769,000)	$4,379,357
433	Transportation DIF	1,409,888	330,000	-	-	$1,739,888
	Total Transportation Funds	**6,006,782**	**21,004,366**	**(5,764,335)**	**(13,097,366)**	**$8,149,447**
Grant Funds						
220	Community Development Block Grant	-	3,161,636	(3,161,636)	-	$0
	Total Grant Funds	**-**	**3,161,636**	**(3,161,636)**	**0**	**$0**
Enterprise Funds						
510	Electric Utility	160,289,333	423,102,320	(427,834,287)	(48,432,978)	$107,124,388
520	Water Utility	74,826,866	92,564,224	(83,961,933)	(30,089,738)	$53,339,419
530	Airport	212,862	1,378,025	(1,494,547)	(5,500)	$90,840
540	Refuse	(8,519,026)	23,232,332	(27,956,450)	-	($13,243,144)
550	Sewer	41,094,113	69,511,919	(69,988,834)	-	$40,617,198
570	Public Parking	(177,030)	7,055,562	(7,201,500)	-	($322,968)
	Total Enterprise Funds	**267,727,118**	**616,844,382**	**(618,437,551)**	**(78,528,216)**	**$187,605,733**
Other Sources						
240	Air Quality Management District	1,518,056	625,000	(401,210)	-	$1,741,846
410	Storm Drain DIF	224,323	192,500	(50,000)	(100,000)	$266,823
411	Special Capital Improvement	593,162	1,950,000	(1,120,235)	-	$1,422,927
413	Regional Park Special Capital Imp	4,279,188	534,000	-	-	$4,813,188
640	Central Stores	6,959,057	1,399,708	(1,026,105)	-	$7,332,660
650	Central Garage	(2,075,231)	12,855,575	(13,824,512)	-	($3,044,168)
	Total Other Sources	**11,498,555**	**17,556,783**	**(16,422,062)**	**(100,000)**	**$12,533,276**
	TOTAL	**285,232,455**	**662,442,167**	**(643,785,584)**	**(95,600,582)**	**$208,288,456**

NOTES

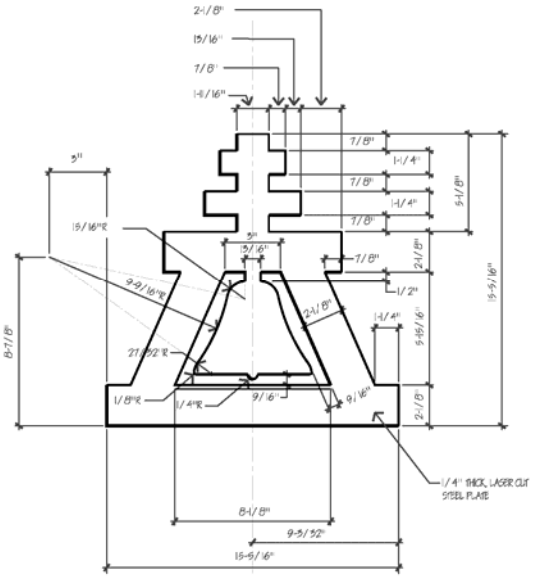
2-1/8"
15/16"
7/8"
1-11/16"
3"
15/16"R
9-9/16"R
27-9/32"R
1/8"R
1/4"R
9/16"
9/16"
7/8"
1-1/4"
7/8"
1-1/4"
7/8"
5-1/8"
7/8"
2-1/8"
1/2"
1-1/4"
5-15/16"
2-1/8"
15-9/16"
8-7/8"
1/4" THICK, LASER CUT STEEL PLATE
8-1/8"
9-5/32"
15-9/16"

Capital Improvement Projects by Funding Source

General Fund Fund 101							
Project Detail	Carryover Amount	2018/19	2019/20	2020/21	2021/22	2022/23	Total
SECURITY IMPROVEMENTS	143,853	-	-	-	-	-	143,853
LA SIERRA LIBRARY AIR HANDLER & HEATING UNITS	50,000	-	-	-	-	-	50,000
FACILITY ROOF REPAIRS	40,950	-	-	-	-	-	40,950
Total Funding Source	**234,803**	**-**	**-**	**-**	**-**	**-**	**234,803**

Grant Fund Fund 215							
Project Detail	Carryover Amount	2018/19	2019/20	2020/21	2021/22	2022/23	Total
MT RUBIDOUX TRAIL IMPROVEMENTS	53,730	-	-	-	-	-	53,730
Total Funding Source	**53,730**	**-**	**-**	**-**	**-**	**-**	**53,730**

CDBG Fund Fund 220							
Project Detail	Carryover Amount	2018/19	2019/20	2020/21	2021/22	2022/23	Total
NICHOLS COMMUNITY CENTER RENOVATION	119,752	-	-	-	-	-	119,752
EL DORADO PARK WALKING PATH	80,100	-	-	-	-	-	80,100
HUNTER PARK - RAILROAD KIOSK	67,554	-	-	-	-	-	67,554
MARTHA MCLEAN ANZA NARROWS - FRISBEE GOLF COURSE	48,931	-	-	-	-	-	48,931
GOESKE SENIOR CENTER - RESTROOM RENOVATION	49,820	-	-	-	-	-	49,820
MYRA LINN PARK - ACCESS IMPROVEMENTS	33,003	-	-	-	-	-	33,003
MYRA LINN PARK - SHADE SAILS	89,820	-	-	-	-	-	89,820
MYRA LINN PARK - FITNESS STATIONS	89,554	-	-	-	-	-	89,554
LA SIERRA PARK ADA WALKWAY - PHASE I	200,763	-	-	-	-	-	200,763
FAIRMOUNT PARK SIGNAGE	190,000	-	-	-	-	-	190,000
BORDWELL PARK - FLOOR REPLACEMENT	248,299	-	-	-	-	-	248,299
VILLEGAS PARK - WADING POOL DESIGN	40,000	-	-	-	-	-	40,000
LA SIERRA PARK ADA WALKWAY - PHASE II	30,000	-	-	-	-	-	30,000
Total Funding Source	**1,287,597**	**-**	**-**	**-**	**-**	**-**	**1,287,597**

Gas Tax Fund Fund 230							
Project Detail	Carryover Amount	2018/19	2019/20	2020/21	2021/22	2022/23	Total
MISC STREET CONSTRUCTION PROGRAM	299,298	500,000	500,000	500,000	500,000	500,000	2,799,298
CANYON CREST WIDENING	1,657,409	-	-	-	-	-	1,657,409
JURUPA AVENUE EXTENSION	701,332	-	-	-	-	-	701,332
UP QUIET ZONE - BROCKTON AND PALM	600,000	-	-	-	-	-	600,000
ADAMS STREET/STATE ROUTE 91 INTERCHANGE IMPROVEMENTS	639,710	500,000	500,000	-	-	-	1,639,710
MISCELLANEOUS TRAFFIC PROJECTS	-	75,000	75,000	75,000	75,000	75,000	375,000
CURB AND GUTTER REPAIR PROGRAM	163,616	200,000	200,000	200,000	200,000	200,000	1,163,616
MINOR STREET REHABILITATION PROGRAM	2,017,203	1,500,000	1,500,000	1,500,000	1,500,000	1,500,000	9,517,203
SIDEWALK/TRAIL CONSTRUCTION PROGRAM	280,024	300,000	300,000	300,000	300,000	300,000	1,780,024
SIDEWALK REPAIR PROGRAM	255,125	300,000	300,000	300,000	300,000	300,000	1,755,125
PEDESTRIAN RAMPS PROGRAM	475,153	300,000	300,000	300,000	300,000	300,000	1,975,153
CDBG STREET IMPROVEMENTS - MATCHING FUNDS	540,944	150,000	150,000	150,000	150,000	150,000	1,290,944
NORTE VISTA SIDEWALK IMPROVEMENTS	1,220,815	-	-	-	-	-	1,220,815
WELLS AND ARLANZA SIDEWALK PROJECT	285,428	-	-	-	-	-	285,428
DOWNTOWN BICYCLE & PEDESTRIAN IMPROVEMENTS	219,890	-	-	-	-	-	219,890
MINOR STREET PRESERVATION PROGRAM (SLURRY/ARAM)	464,333	500,000	500,000	500,000	500,000	500,000	2,964,333
VAN BUREN BLVD WIDENING	120,000	-	-	-	-	-	120,000
SAN ANDREAS DRAINAGE IMPROVEMENTS	20,175	-	-	-	-	-	20,175

Gas Tax Fund (continued)
Fund 230

Project Detail	Carryover Amount	2018/19	2019/20	2020/21	2021/22	2022/23	Total
COCHRAN STORM DRAIN PROJECT	811,702	-	-	-	-	-	811,702
INDIAN HILL ROAD SLOPE MITIGATION PROJECT	37,157	210,000	-	-	-	-	247,157
SB-1 PAVEMENT REHABILITATION, MAINTENANCE, AND SAFETY IMPRO	-	5,426,724	5,426,724	5,503,366	5,503,366	5,503,366	27,363,546
BNSF/THIRD STREET GRADE SEPARATION	32,857	323,069	-	-	-	-	355,926
Total Funding Source	**10,842,171**	**10,284,793**	**9,751,724**	**9,328,366**	**9,328,366**	**9,328,366**	**58,863,786**

AQMD Fund
Fund 240

Project Detail	Carryover Amount	2018/19	2019/20	2020/21	2021/22	2022/23	Total
CITYWIDE BIKE SHARE PROGRAM	63,000	-	-	-	-	-	63,000
Total Funding Source	**63,000**	**-**	**-**	**-**	**-**	**-**	**63,000**

General Fund Capital
Fund 401

Project Detail	Carryover Amount	2018/19	2019/20	2020/21	2021/22	2022/23	Total
MT RUBIDOUX TRAIL IMPROVEMENTS	39,721	-	-	-	-	-	39,721
Total Funding Source	**39,721**	**-**	**-**	**-**	**-**	**-**	**39,721**

Storm Drain DIF Fund
Fund 410

Project Detail	Carryover Amount	2018/19	2019/20	2020/21	2021/22	2022/23	Total
MISCELLANEOUS STORM DRAIN CONSTRUCTION	128,525	100,000	100,000	100,000	100,000	100,000	628,525
MONROE STORM DRAIN PROJECT (LINES E2, E3, E5)	12,475,557	-	-	-	-	-	12,475,557
FAIRVIEW & CORNWALL STORM DRAIN PROJECT	-	950,000	-	-	-	-	950,000
Total Funding Source	**12,604,082**	**1,050,000**	**100,000**	**100,000**	**100,000**	**100,000**	**14,054,082**

Regional Park Fund
Fund 413

Project Detail	Carryover Amount	2018/19	2019/20	2020/21	2021/22	2022/23	Total
MT RUBIDOUX TRAIL IMPROVEMENTS	49,300	-	-	-	-	-	49,300
PARKS MASTER PLAN UPDATE	455,439	-	-	-	-	-	455,439
Total Funding Source	**504,739**	**-**	**-**	**-**	**-**	**-**	**504,739**

Measure Z Capital Fund
Fund 420

Project Detail	Carryover Amount	2018/19	2019/20	2020/21	2021/22	2022/23	Total
CITY BUILDINGS DEFERRED MAINTENANCE	-	1,000,000	1,000,000	1,000,000	1,000,000	1,000,000	5,000,000
DATA NETWORK REPLACEMENT	-	854,554	753,198	264,907	-	-	1,872,659
MEASURE Z PAVEMENT REHABILITATION AND PEDESTRIAN FACILITIES IN	-	2,875,000	2,875,000	2,875,000	2,875,000	2,875,000	14,375,000
DOWNTOWN LIBRARY	1,000,000	1,000,000	-	-	-	-	2,000,000
Total Funding Source	**1,000,000**	**5,729,554**	**4,628,198**	**4,139,907**	**3,875,000**	**3,875,000**	**23,247,659**

Capital Improvement Projects by Funding Source

Capital Outlay Fund Fund 430							
Project Detail	Carryover Amount	2018/19	2019/20	2020/21	2021/22	2022/23	Total
ARLINGTON AVENUE IMPROVEMENTS	662,747	-	-	-	-	-	662,747
CITYWIDE BIKE SHARE PROGRAM	240,000	-	-	-	-	-	240,000
WELLS AND ARLANZA SIDEWALK PROJECT	1,464,470	-	-	-	-	-	1,464,470
BNSF/THIRD STREET RAILROAD CROSSING	627,953	-	-	-	-	-	627,953
MONROE REHAB-LINCOLN TO ARLINGTON	54,979	-	-	-	-	-	54,979
RTA BUS PAD CONSTRUCTION	961,307	-	-	-	-	-	961,307
Total Funding Source	**4,011,456**	**-**	**-**	**-**	**-**	**-**	**4,011,456**

Measure A Fund Fund 432							
Project Detail	Carryover Amount	2018/19	2019/20	2020/21	2021/22	2022/23	Total
CONTROLLER ASSEMBLY REPLACEMENT	30,368	70,000	70,000	70,000	70,000	70,000	380,368
SPREAD SPECTRUM RADIO REPLACEMENT	11,070	10,000	10,000	10,000	10,000	10,000	61,070
TRAFFIC SIGNAL LOOP REPLACEMENT PROGRAM	20,800	25,000	25,000	25,000	25,000	25,000	145,800
MISCELLANEOUS SIGNAL REVISIONS PROGRAM	90,097	100,000	100,000	100,000	100,000	100,000	590,097
ARTERIAL INTERCONNECT PROGRAM	49,244	40,000	40,000	40,000	40,000	40,000	249,244
CANYON CREST WIDENING	1,650,000	-	-	-	-	-	1,650,000
TRAFFIC MANAGEMENT CENTER	54,571	50,000	50,000	50,000	50,000	50,000	304,571
BNSF/UP QUIET ZONE - PANORAMA & CRIDGE	2,105,560	-	-	-	-	-	2,105,560
JURUPA AVENUE EXTENSION	206	-	-	-	-	-	206
NEW TRAFFIC SIGNALS PROGRAM	258,732	250,000	250,000	250,000	250,000	250,000	1,508,732
BNSF QUIET ZONE - MISSION INN, 3RD, & SPRUCE	20,000	20,600	757,500	772,700	788,200	804,000	3,163,000
LED SIGNAL LENSES REPLACEMENT PROGRAM	12,239	20,000	20,000	20,000	20,000	20,000	112,239
MISSION BOULEVARD BRIDGE REPLACEMENT AT SANTA ANA RIVER	234,472	100,000	500,000	250,000	-	-	1,084,472
MARKET STREET BRIDGE REPLACEMENT OVER THE SANTA ANA RIVER	54,247	-	-	250,000	150,000	-	454,247
UNIVERSITY AVENUE FIBER OPTIC	50,000	-	-	-	-	-	50,000
UP QUIET ZONE - BROCKTON AND PALM	854,605	722,000	-	-	-	-	1,576,605
ARLINGTON AVENUE IMPROVEMENTS	554,424	-	-	-	-	-	554,424
MAGNOLIA AVENUE WIDENING FROM BUCHANAN STREET TO HOLE A	2,904,331	-	-	-	-	-	2,904,331
MAJOR STREETS REHABILITATION	2,318,160	2,400,000	2,400,000	2,400,000	2,400,000	2,400,000	14,318,160
VAN BUREN BLVD WIDENING	129,997	-	-	-	-	-	129,997
CENTRAL/CANYON CREST/WATKINS BIKE LANES	215,000	-	-	-	-	-	215,000
HIGH FRICTION SURFACE AND HAWK SIGNALS	195,000	-	-	-	-	-	195,000
MONROE REHAB-LINCOLN TO ARLINGTON	2,278,936	-	-	-	-	-	2,278,936
SAN ANDREAS DRAINAGE IMPROVEMENTS	-	125,000	-	-	-	-	125,000
ACTIVE TRANSPORTATION MASTER PLAN	-	200,000	-	-	-	-	200,000
INTERCONNECTED TRAFFIC SIGNAL CONTROLLER REPLACEMENT	-	560,000	-	-	-	-	560,000
Total Funding Source	**14,092,059**	**4,692,600**	**4,222,500**	**4,237,700**	**3,903,200**	**3,769,000**	**34,917,059**

Transportation DIF Fund Fund 433							
Project Detail	Carryover Amount	2018/19	2019/20	2020/21	2021/22	2022/23	Total
CANYON CREST WIDENING	2,125,000	560,000	-	-	-	-	2,685,000
MAGNOLIA AVENUE WIDENING FROM BUCHANAN STREET TO HOLE A	410,000	-	-	-	-	-	410,000
IOWA AVENUE WIDENING	-	1,000,000	-	-	-	-	1,000,000
Total Funding Source	**2,535,000**	**1,560,000**	**-**	**-**	**-**	**-**	**4,095,000**

Capital Improvement Projects by Funding Source

TUMF Fund Fund 434							
Project Detail	Carryover Amount	2018/19	2019/20	2020/21	2021/22	2022/23	Total
ADAMS STREET/STATE ROUTE 91 INTERCHANGE IMPROVEMENTS	4,100,000	-	-	-	-	-	4,100,000
Total Funding Source	**4,100,000**	**-**	**-**	**-**	**-**	**-**	**4,100,000**

Arlington Tax Exempt Bond Fund Fund 471							
Project Detail	Carryover Amount	2018/19	2019/20	2020/21	2021/22	2022/23	Total
ARLINGTON YOUTH INNOVATION CENTER	130,941	-	-	-	-	-	130,941
Total Funding Source	**130,941**	**-**	**-**	**-**	**-**	**-**	**130,941**

Electric Fund Fund 510							
Project Detail	Carryover Amount	2018/19	2019/20	2020/21	2021/22	2022/23	Total
DISTRIBUTION LINE EXTENSIONS	480,121	1,786,718	1,831,940	2,147,002	2,543,146	2,928,755	11,717,682
LINE REBUILDS	672,199	1,789,804	2,506,363	3,030,747	3,954,352	4,756,334	16,709,799
STREET LIGHTING	37,026	300,000	300,000	300,000	300,000	300,000	1,537,026
SYSTEM SUBSTATION MODIFICATIONS	93,574	190,406	195,833	201,414	180,224	223,259	1,084,710
TRANSFORMERS	1,219,799	2,048,156	3,585,579	4,073,288	4,483,809	4,429,839	19,840,470
CAPACITORS-REGULATORS	50,000	-	-	-	-	-	50,000
METERS	220,197	300,000	300,000	300,000	300,000	300,000	1,720,197
SUBSTATION INNOVATION	-	1,665,800	1,672,031	1,805,332	1,430,357	1,808,664	8,382,184
SERVICES	193,267	400,000	400,000	400,000	400,000	400,000	2,193,267
SUBSTATION BUS & UPGRADES	11,484,840	1,281,265	1,359,025	1,445,266	1,261,958	1,754,702	18,587,056
MAJOR OVERHEAD/UNDERGROUND CONVERSIONS	375,512	500,000	500,000	500,000	500,000	500,000	2,875,512
MAJOR TRANSMISSION LINE PROJECTS	377,382	300,000	300,000	300,000	300,000	300,000	1,877,382
GENERAL ORDER 165 (GO 165) UPGRADES/LINE REBUILDS/RELOCATI(	2,435,603	2,284,874	2,349,993	2,193,175	2,255,680	2,319,967	13,839,292
GO 165 UPGRADES/LINE REBUILDS/RELOCATE-UNDERGROUND	-	994,344	1,022,682	1,058,122	1,849,179	2,702,265	7,626,592
MAJOR TRACT DISTRIBUTION	845,088	300,000	300,000	300,000	300,000	300,000	2,345,088
SUBSTATION TRANSFORMER ADDITION	912,820	2,115,625	2,175,920	2,349,830	1,860,936	2,354,187	11,769,318
MAJOR FEEDERS	601,476	500,000	1,000,000	1,000,000	1,000,000	1,150,000	5,251,476
SOUTHERN CALIFORNIA EDISON (SCE) CONDEMNATION COSTS	656,208	-	-	-	-	-	656,208
CABLE REPLACEMENT	4,151,963	3,434,790	2,822,794	4,595,195	6,169,952	7,620,438	28,795,132
CABLE REPLACEMENT – PUBLIC WORKS STREET REHABILITATION	-	211,562	217,592	331,214	476,915	618,039	1,855,322
MAJOR STREET LIGHT PROJECTS	13,602,150	4,266,796	300,000	300,000	300,000	300,000	19,068,946
NEIGHBORHOOD STREET LIGHT RETROFIT	3,065,127	2,690,017	2,502,308	1,286,812	978,229	1,006,108	11,528,601
MAJOR 4-12 KV CONVERSION	4,831,668	2,327,927	1,849,532	2,339,759	3,272,762	3,063,092	17,684,740
DISTRIBUTION AUTOMATION/RELIABILITY	1,423,385	150,000	300,000	300,000	990,514	1,720,388	4,884,287
CITYWIDE COMMUNICATIONS	4,882,935	400,000	1,338,000	1,338,000	1,338,000	1,338,000	10,634,935
SUPERVISORY CONTROL AND DATA ACQUISITION (SCADA)	1,221,564	600,000	600,000	600,000	600,000	600,000	4,221,564
RIVERSIDE TRANSMISSION RELIABILITY PROJECT (RTRP)	57,777,811	-	-	-	-	-	57,777,811
RTRP - 230kV REIMBURSABLE	15,017,267	-	-	-	-	-	15,017,267
CUSTOMER INFORMATION SYSTEM (CIS) UPGRADE	1,120,405	-	-	-	-	-	1,120,405
GEOGRAPHIC INFORMATION SYSTEM (GIS) UPGRADE	3,500,000	-	-	-	-	-	3,500,000
DARK FIBER	1,200,000	-	-	-	-	-	1,200,000
ENTERPRISE OPER DATA MGMT SYSTEM	507,108	-	-	-	-	-	507,108
ADVANCED METERING INFRASTRUCTURE	790,000	-	2,719,900	2,797,417	-	-	6,307,317
OPERATIONAL TECHNOLOGY GOVERNANCE	-	220,024	226,295	232,746	239,379	430,852	1,349,296
WORK, ASSET, & INVENTORY MGMT SYSTEM	-	486,594	652,776	671,380	2,071,543	2,367,313	6,249,606
NETWORK COMMUNICATION SYSTEM	-	846,250	1,087,960	1,118,967	1,150,857	1,183,657	5,387,691
LAND MOBILE RADIO	-	-	-	-	598,446	-	598,446
OUTAGE MANAGEMENT SYSTEM	-	-	-	257,362	690,514	710,194	1,658,070

Capital Improvement Projects by Funding Source

Electric Fund (continued) Fund 510							
Project Detail	Carryover Amount	2018/19	2019/20	2020/21	2021/22	2022/23	Total
ADVANCED DISTRIBUTION MANAGEMENT SYSTEM	-	-	-	895,173	920,686	946,925	2,762,784
DATA NETWORK REPLACEMENT	-	266,712	235,079	82,678	-	-	584,469
Total Funding Source	**133,746,495**	**32,657,664**	**34,651,602**	**38,550,879**	**42,717,438**	**48,432,978**	**330,757,056**

Water Fund Fund 520							
Project Detail	Carryover Amount	2018/19	2019/20	2020/21	2021/22	2022/23	Total
DISTRIBUTION AUTOMATION/RELIABILITY	-	-	-	604,242	161,120	591,828	1,357,190
SYSTEM EXPANSION	-	1,300,000	1,377,491	1,734,262	1,783,689	1,834,524	8,029,966
METERS	604,592	846,250	870,368	895,173	920,686	946,925	5,083,994
WATER STOCK	-	10,000	10,000	10,880	11,190	11,509	53,579
DISTRIBUTION SYSTEM FACILITIES REPLACEMENTS	-	1,496,093	1,500,000	1,849,532	1,902,243	1,956,457	8,704,325
MAIN REPLACEMENTS PROGRAM	3,155,232	2,801,087	3,807,860	5,650,782	6,329,715	7,693,769	29,438,445
TRANSMISSION MAINS	298,473	5,341,952	1,450,250	10,353,799	6,214,629	6,320,727	29,979,830
PUMP STATION REPLACEMENTS	1,230,969	-	1,087,960	2,237,934	1,150,857	-	5,707,720
FACILITY REHABILITATION PROGRAM	3,381,927	2,485,858	870,368	1,454,657	920,686	1,716,302	10,829,798
RECYCLED WATER (JACKSON ST. PHASE 1 - SITE CONVERSIONS)	6,577,925	3,702,343	-	-	-	-	10,280,268
SEVEN OAKS DAM CONSERVATION-ENHANCED RECHARGE	5,729,823	2,115,624	2,175,920	2,797,417	-	-	12,818,784
AQUIFER STORAGE & RECOVERY SYSTEM	2,113,772	-	-	-	-	-	2,113,772
HYDRANT CHECK VALVES	-	50,000	50,000	97,916	100,707	103,577	402,200
UPPER SANTA ANA RIVER HABITAT CONSERVATION PLAN	190,744	-	-	-	-	-	190,744
ENTERPRISE OPER DATA MGMT SYSTEM	255,534	-	-	-	-	-	255,534
ADVANCED METERING INFRASTRUCTURE	460,000	-	2,339,114	2,349,830	1,979,475	1,420,388	8,548,807
OPERATIONAL TECHNOLOGY GOVERNANCE	-	118,475	121,851	125,325	128,896	231,998	726,545
WORK, ASSET, & INVENTORY MGMT SYSTEM	-	-	-	-	-	603,665	603,665
NETWORK COMMUNICATION SYSTEM	-	846,250	870,368	223,793	230,171	710,194	2,880,776
LAND MOBILE RADIO	-	-	-	-	322,240	-	322,240
MOBILE APPLICATIONS	-	-	-	-	-	503,054	503,054
SCADA UPGRADE & SYSTEM AUTOMATION	-	-	652,776	671,380	920,686	946,925	3,191,767
POTABLE/IRRIGATION WELL REPLACEMENT	-	1,586,719	1,631,940	2,797,417	575,429	4,497,896	11,089,401
DATA NETWORK REPLACEMENT	-	98,807	87,088	30,629	-	-	216,524
Total Funding Source	**23,998,991**	**22,799,458**	**18,903,354**	**33,884,968**	**23,652,419**	**30,089,738**	**153,328,928**

Airport Fund Fund 530							
Project Detail	Carryover Amount	2018/19	2019/20	2020/21	2021/22	2022/23	Total
RUNWAY 16/34 REHABILITATION	-	-	-	2,475	41,250	-	43,725
AIRPORT - TAXIWAY A REHAB	-	-	-	-	-	5,500	5,500
AIRPORT - TAXIWAY J REHAB	-	9,075	-	82,500	-	-	91,575
DATA NETWORK REPLACEMENT	-	4,672	4,118	1,449	-	-	10,239
AIRPORT FACILITIES TERMINAL PATIO DECK	-	100,000	-	-	-	-	100,000
APRON ASPHALT PROJECT PHASE I	-	100,000	-	-	-	-	100,000
AIRPORT CAMERA SYSTEM	-	50,000	-	-	-	-	50,000
Total Funding Source	**-**	**263,747**	**4,118**	**86,424**	**41,250**	**5,500**	**401,039**

Refuse Fund Fund 540							
Project Detail	Carryover Amount	2018/19	2019/20	2020/21	2021/22	2022/23	Total
DATA NETWORK REPLACEMENT	-	36,551	32,216	11,331	-	-	80,098
Total Funding Source	**-**	**36,551**	**32,216**	**11,331**	**-**	**-**	**80,098**

Capital Improvement Projects by Funding Source

Sewer Fund Fund 550							
Project Detail	Carryover Amount	2018/19	2019/20	2020/21	2021/22	2022/23	Total
SECONDARY SYSTEM UPGRADES	270,000	-	-	-	-	-	270,000
TEQUESQUITE/ARROYO TRUNK LINE	14,679,673	-	-	-	-	-	14,679,673
COLLECTION SYSTEM UPGRADES	1,162,740	1,000,000	-	-	-	-	2,162,740
RWQCP REHABILITATION - PHASE II	-	500,000	-	-	-	-	500,000
DEWATERING SCREW PRESSES	144,721	-	-	-	-	-	144,721
WQCP LEVEE UPGRADE	4,343,149	-	-	-	-	-	4,343,149
TERTIARY SYSTEM REHAB - PHASE I	1,159,196	-	400,000	3,000,000	-	-	4,559,196
BIO-SOLIDS HANDLING REHABILITATION	1,678,366	-	-	-	-	-	1,678,366
SPRUCE PRIORITY B&C SEWER CONSTRUCTION	2,000,000	-	-	-	-	-	2,000,000
TEQUESQUITE PRIORITY A, B, AND C SEWER CONSTRUCTION	3,775,000	-	-	-	-	-	3,775,000
WASTEWATER LIFT STATIONS	1,100,000	-	-	-	-	-	1,100,000
PLANT 2 BLOWER NO.2 REHAB/REPLACEMENT	1,386,018	-	-	-	-	-	1,386,018
DATA NETWORK REPLACEMENT	-	66,761	58,843	20,696	-	-	146,300
PLANT 2 ACTIVATED SLUDGE REHAB - PHASE I	-	400,000	250,500	-	-	-	650,500
Total Funding Source	**31,698,863**	**1,966,761**	**709,343**	**3,020,696**	**-**	**-**	**37,395,663**

Central Stores Fund Fund 640							
Project Detail	Carryover Amount	2018/19	2019/20	2020/21	2021/22	2022/23	Total
DATA NETWORK REPLACEMENT	-	5,341	4,707	1,656	-	-	11,704
Total Funding Source	**-**	**5,341**	**4,707**	**1,656**	**-**	**-**	**11,704**

Fleet Fund Fund 650							
Project Detail	Carryover Amount	2018/19	2019/20	2020/21	2021/22	2022/23	Total
FLEET METHANE DETECTION SYSTEM	645,000	-	-	-	-	-	645,000
ETHANOL (E85) FUELING STATION	240,000	100,000	-	-	-	-	340,000
DATA NETWORK REPLACEMENT	-	22,699	20,007	7,036	-	-	49,742
Total Funding Source	**885,000**	**122,699**	**20,007**	**7,036**	**-**	**-**	**1,034,742**

Total	**241,828,648**	**81,169,168**	**73,027,769**	**93,368,963**	**83,617,673**	**95,600,582**	**668,612,803**

* Estimated carryover is calculated as of March 2018 and does not take into account additional spending through June 30, 2018.

Revenue Summary by Fund

General Funds					
Fund	**2018/19**	**2019/20**	**2020/21**	**2021/22**	**2022/23**
420 Measure Z Capital	5,729,554	4,628,198	4,139,907	3,875,000	3,875,000
Total General Funds	**5,729,554**	**4,628,198**	**4,139,907**	**3,875,000**	**3,875,000**

Transporation Funds					
Fund	**2018/19**	**2019/20**	**2020/21**	**2021/22**	**2022/23**
230 Gas Tax	12,031,724	12,031,724	12,108,366	12,108,366	12,108,366
432 Measure A	7,813,000	7,966,000	8,161,000	8,361,000	8,566,000
433 Transportation DIF	330,000	330,000	330,000	330,000	330,000
Total Transporation Funds	**20,174,724**	**20,327,724**	**20,599,366**	**20,799,366**	**21,004,366**

Grants Funds					
Fund	**2018/19**	**2019/20**	**2020/21**	**2021/22**	**2022/23**
220 Community Development Block Grant	3,052,108	3,080,928	3,105,855	3,135,067	3,161,636
Total Grants Funds	**3,052,108**	**3,080,928**	**3,105,855**	**3,135,067**	**3,161,636**

Enterprise Funds*					
Fund	**2018/19**	**2019/20**	**2020/21**	**2021/22**	**2022/23**
510 Electric	479,010,932	390,350,694	398,948,245	527,960,449	423,102,320
520 Water	127,811,303	80,710,703	84,256,883	155,123,983	92,564,224
530 Airport	1,343,000	1,378,025	1,378,025	1,378,025	1,378,025
540 Refuse	23,053,635	23,096,435	23,140,185	23,185,466	23,232,332
550 Sewer	66,847,305	67,552,100	68,250,579	68,920,306	69,511,919
570 Public Parking	6,529,021	6,649,218	6,781,992	6,917,421	7,055,562
Total Enterprise Funds*	**704,595,196**	**569,737,175**	**582,755,909**	**783,485,650**	**616,844,382**

Other Funds					
Fund	**2018/19**	**2019/20**	**2020/21**	**2021/22**	**2022/23**
240 Air Quality Management District	625,000	625,000	625,000	625,000	625,000
410 Storm Drain DIF	192,500	192,500	192,500	192,500	192,500
411 Special Capital Improvement	2,552,370	2,488,885	1,950,000	1,950,000	1,950,000
413 Regional Park Special Capital Imp	534,000	534,000	534,000	534,000	534,000
640 Central Stores	1,399,708	1,399,708	1,399,708	1,399,708	1,399,708
650 Central Garage	12,184,280	12,403,626	12,588,821	12,738,899	12,855,575
Total Other Funds	**17,487,858**	**17,643,719**	**17,290,029**	**17,440,107**	**17,556,783**

Total Revenue	**751,039,440**	**615,417,744**	**627,891,066**	**828,735,190**	**662,442,167**

* Bond proceeds are included in the revenue estimates of Enterprise Funds.

NOTES

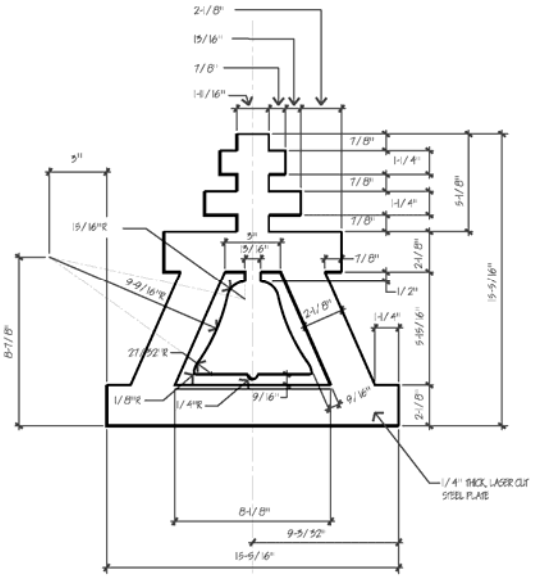
2-1/8"
15/16"
7/8"
1-11/16"
3"
15/16"R
9-9/16"R
8-7/8"
27-52"R
1/8"R
1/4"R
9/16"
9/16"
7/8"
1-1/4"
7/8"
1-1/4"
7/8"
5-1/8"
15/16"
7/8"
2-1/8"
1/2"
2-1/8"
1-1/4"
5-15/16"
2-1/8"
15-9/16"
1/4" THICK, LASER CUT STEEL PLATE
8-1/8"
9-5/32"
15-9/16"

CITY OF RIVERSIDE

CAPITAL IMPROVEMENT PROGRAM

AIRPORT

NOTES

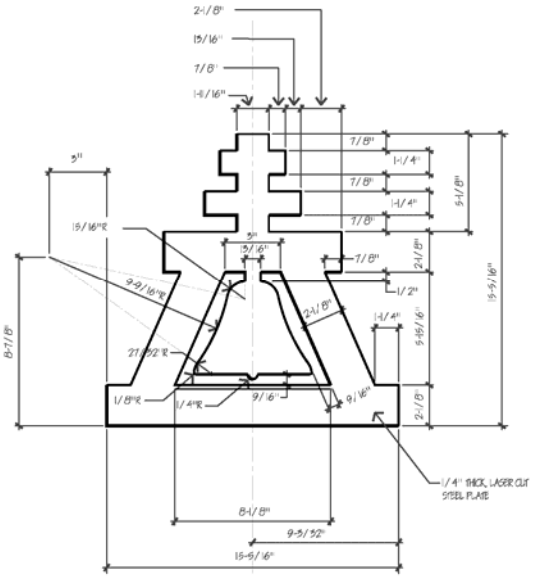
2-1/8"
15/16"
7/8"
1-11/16"
3"
15/16"R
9-9/16"R
8-7/8"
27-52"R
1/8"R
1/4"R
9/16"
9/16"
7/8"
1-1/4"
7/8"
1-1/4"
7/8"
5-1/8"
15/16"
7/8"
2-1/8"
1/2"
1-1/4"
5-15/16"
2-1/8"
15-9/16"
1/4" THICK, LASER CUT STEEL PLATE
8-1/8"
9-5/32"
15-9/16"

Project Category Overview: Airport

Introduction

The Airport Division of the General Services Department is responsible for providing a safe operating environment for private and corporate general aviation aircraft operators at the City's 525 acre airport. Riverside Municipal Airport experienced growth through 2017 with the addition of a seventh aviation school providing the Inland Empire and surrounding counties with the largest selection of education in flight, mechanical and degree programs in the region.

The Division oversees the Airport leasing program, which includes more than 120 leases, manages the Airport capital improvement program, infrastructure maintenance, and administer Federal Aviation Administration policies and procedures.

Proposed Two-Year Budget and Five-Year Plan

The five-year Capital Improvement Program (CIP) for Airport totals $390,800. Implementation of the Capital Improvement Plan is consistent with the goals set forth in the Airport Master Plan. Airport CIP projects include airfield improvements that are 95% funded through the FFA Airport Improvement Program and State of California aviation grants. Federal funding requests for airfield projects are submitted each year to the FAA, which competes for priority funding with other airports in the Western-Pacific Region. The Airport's Revenue Fund Balance and Operating Budget funds projects that are not eligible for FAA and State of California grants. Failure to address the aging airport infrastructure will negatively impact operations.

Project Highlights:

Runway

Rehabilitation of the Airport's north/south runway will include minor asphalt repair and new paint. This 3,000 foot runway was constructed in the 1980's and is primarily used during Santa Ana wind conditions, or other weather conditions that preclude the use of the primary east/west runway.

Project Category Overview: Airport

Taxiway Design and Rehabilitation

These projects are for the ongoing maintenance of the primary taxiways providing access to/from the runways and aircraft parking. This scheduled maintenance will ensure the asphalt remains in a safe condition for aircraft operations.

Key Revenues and Funding Sources

Table 1: Funding Sources

Fund	Funding Source	Proposed 2018/19	Proposed 2019/20	Proposed 2020/21	Proposed 2021/22	Proposed 2022/23	Total
530	Airport Fund	259,075	-	84,975	41,250	5,500	$390,800
	TOTAL	**$259,075**	**$0**	**$84,975**	**$41,250**	**$5,500**	**$390,800**

**There are no FAA Capital Projects projected for the 2019/20 fiscal year due to Federal Funding.*

Funding for the CIP is primarily derived from federal and state funds (Federal Aviation Administration and California Department of Transportation (CALTRANS) Division of Aeronautics grant programs. Other funding sources include rent revenues from airport buildings, hangars and ground leases, tie-down fees, and fuel flowage fees.

Perhaps the most significant benefit of having a Capital Improvement Program is that the process focuses attention on improving or constructing the capital improvements necessary for providing the services and facilities expected by the residents and businesses of the City of Riverside, both present and future.

Projects by Major Type of Improvement

Table 2: Schedule of Projects by Major Type of Improvement

Project Type/Project Name	Proposed 2018/19	Proposed 2019/20	Proposed 2020/21	Proposed 2021/22	Proposed 2022/23	Total
Airport						
Airport - Taxiway A Rehab	-	-	-	-	5,500	$5,500
Airport - Taxiway J Rehab	9,075	-	82,500	-	-	$91,575
Airport Camera System	50,000	-	-	-	-	$50,000
Airport Facilities Terminal Patio Deck	100,000	-	-	-	-	$100,000
Apron Asphalt Project Phase I	100,000	-	-	-	-	$100,000
Runway 16/34 Rehabilitation	-	-	2,475	41,250	-	$43,725
TOTAL	**$ 259,075**	**$0**	**$84,975**	**$41,250**	**$5,500**	**$390,800**

Project Category Overview: Airport

Unfunded Projects

Table 3: Top Unfunded Projects by Priority

Project Name	Estimated Project Cost	Unfunded Amount
1. Airport – Taxiway A Rehabilitation	600,000	500,000
2. Upgrade Terminal Restrooms ADA	60,000	60,000
TOTAL	**$660,000**	**$560,000**

Airport identified two capital projects without an identified funding source.

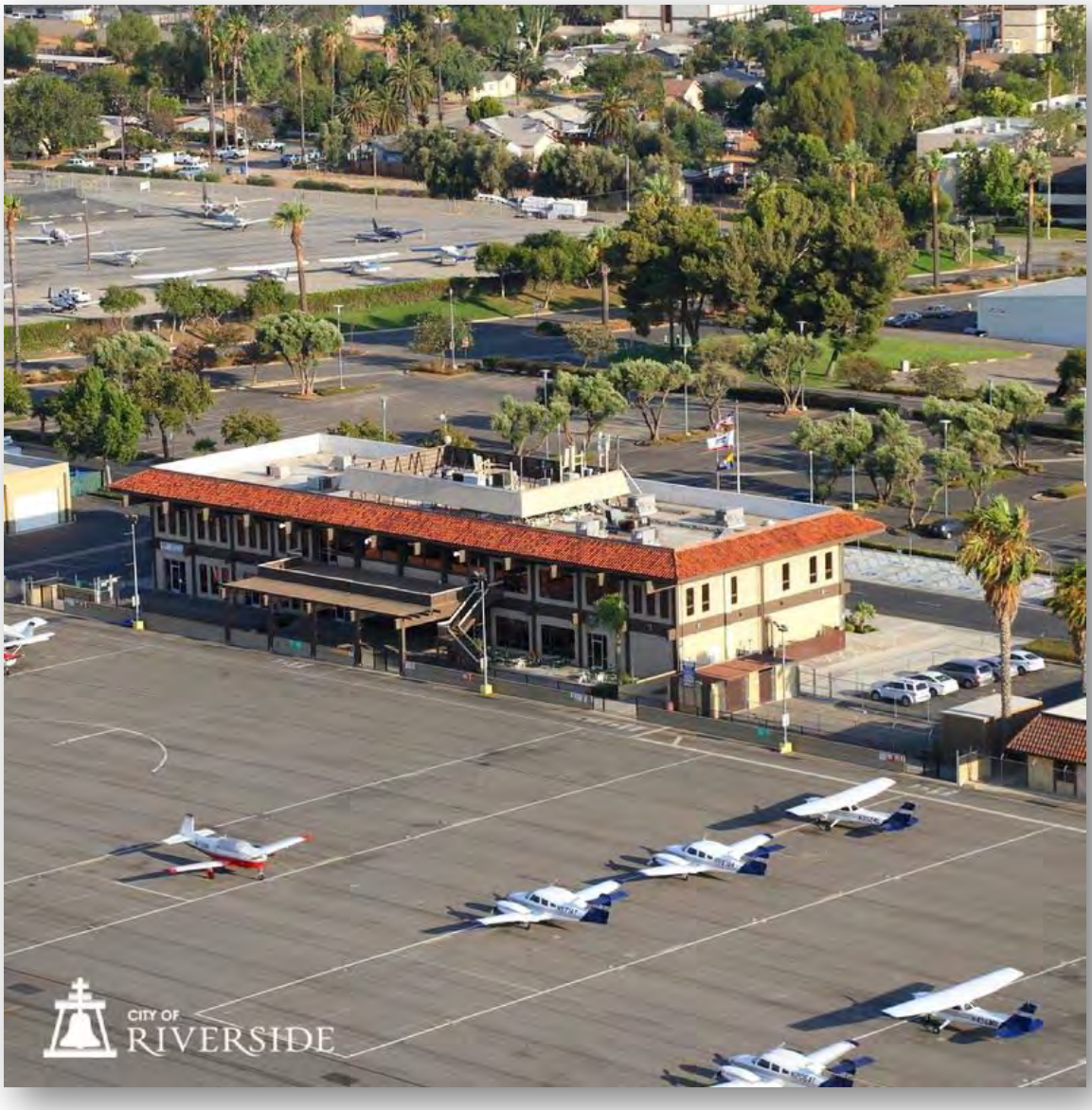

Project Category Overview: Airport

Project Map

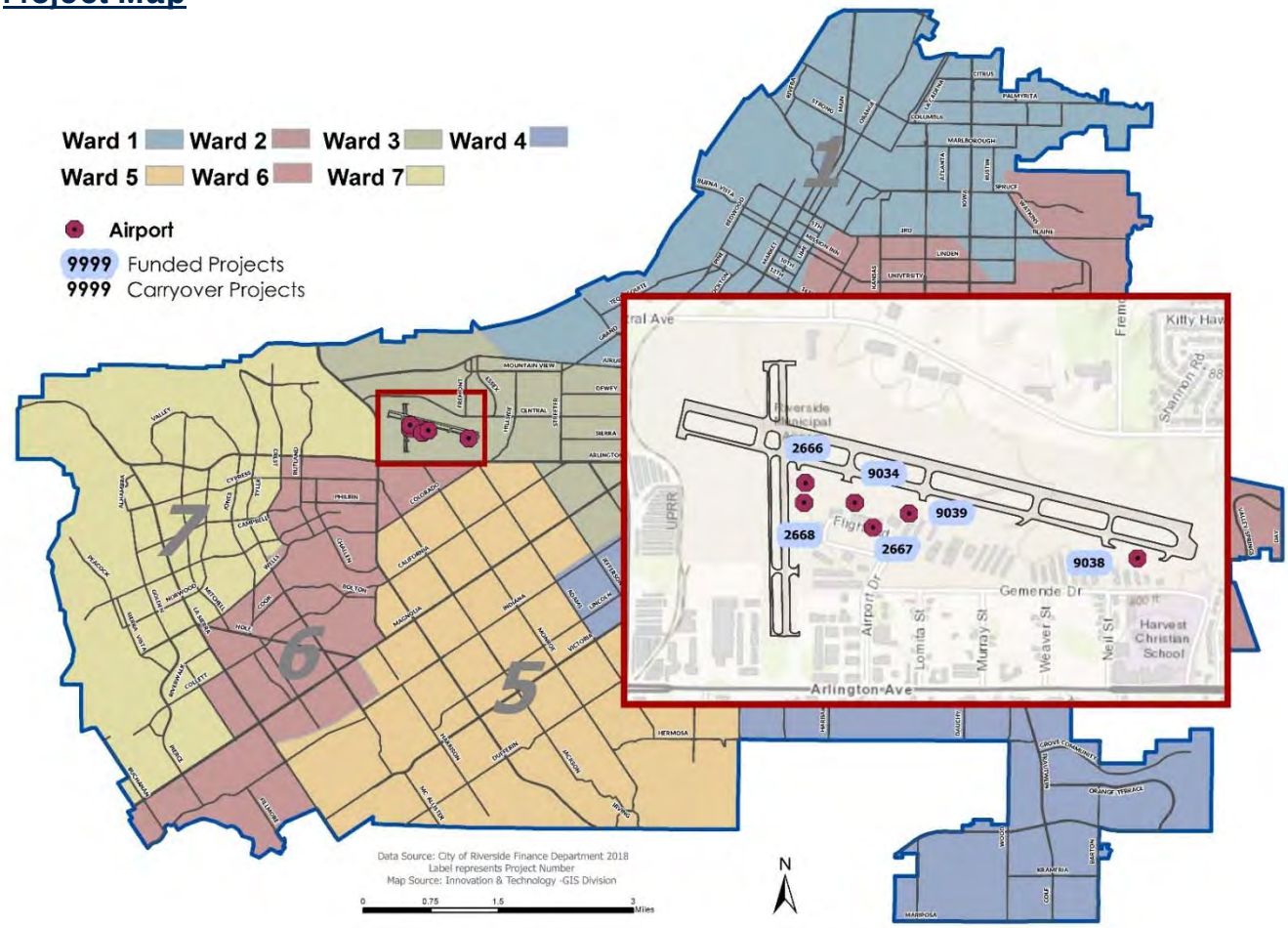

Note: This map includes all active and new capital improvement projects. Ongoing and citywide projects are not included on the map. To view additional information and detailed maps, please visit the City's website at https://riverside.openbook.questica.com.

Graph 1: Distribution by Ward

Ward	Five-Year Total
Ward 1	-
Ward 2	-
Ward 3	390,800
Ward 4	-
Ward 5	-
Ward 6	-
Ward 7	-
All Wards	-
Total	**$390,800**

PRIORITIZATION CATEGORIES

- ☒ Risk to Health, Safety and Environment
- ☒ Regulatory or Mandated Requirements
- ☒ Asset Condition, Annual Recurring Costs and Asset Longevity
- ☐ Community Investment and Economic Prosperity
- ☒ Level and Quality of Service
- ☐ Sustainability and Conservation
- ☐ Funding Availability
- ☐ Project Readiness
- ☒ Multiple Category Benefit and Bundling Opportunities

NEW OR EXISTING

- ☐ New Infrastructure / Facility
- ☒ Existing Infrastructure / Facility

RUNWAY 16/34 REHABILITATION

PROJECT NUMBER 2666 **COUNCIL WARD** 3
PROJECT CATEGORY Airport
PROJECT LOCATION Riverside Municipal Airport, 6951 Flight Road

PROJECT DESCRIPTION
Rehabilitation of Runway 16/34 will consist of improving existing infrastructure through repairing cracks in pavement, re-paving and painting the entire 2,850 feet x 50 feet runway located on the North-west side of the airport. Runway 16/34 runs North to South and allows aircraft to land during crosswinds. The runway has not been repaired or modified since initial construction. City fund portion to be funded by Airport Fund Balance.

PROJECT STATUS
Design phase will occur in Fiscal Year 2021/22 and construction phase will occur in Fiscal Year 2022/23. Remaining project funds will be obtained through FAA and State grants and will be appropriated toward the project when grants are awarded. Both FAA and State Design grants are anticipated to be awarded in Fiscal Year 2021/22 and construction grants anticipated to be awarded in Fiscal Year 2022/23.

OPERATING BUDGET IMPACT
Following rehabilitation there will be no significant expenditures from Runway 16/34 aside from general weed abatement, professional services associated with re-paint of runway striping, and annual safety light maintenance, all of which are currently budgeted to maintain the existing runway.

PROJECT FUNDING OVERVIEW

Total Project Cost	Prior Years Funding	Five Year Plan	REMAINING NEEDED
$795,000	$0	$795,000	**$0**

PROPOSED 2-YEAR BUDGET AND 5-YEAR PLAN

Fund	Funding Source	2018/19	2019/20	2020/21	2021/22	2022/23	TOTAL
530	Airport Fund	-	-	$2,475	$41,250	-	$43,725
*Grant**	*Federal Capital Grants*	-	-	*40,500*	*675,000*	-	*715,500*
*Grant**	*State Capital Grants*	-	-	*2,025*	*33,750*	-	*35,775*
	TOTAL	**$0**	**$0**	**$45,000**	**$750,000**	**$0**	**$795,000**

**Appropriation of funds contingent on grant award. For planning purposes only. Not included in in other areas of the CIP.*

PRIORITIZATION CATEGORIES

- ☒ Risk to Health, Safety and Environment
- ☒ Regulatory or Mandated Requirements
- ☒ Asset Condition, Annual Recurring Costs and Asset Longevity
- ☐ Community Investment and Economic Prosperity
- ☒ Level and Quality of Service
- ☐ Sustainability and Conservation
- ☐ Funding Availability
- ☐ Project Readiness
- ☒ Multiple Category Benefit and Bundling Opportunities

NEW OR EXISTING

- ☐ New Infrastructure / Facility
- ☒ Existing Infrastructure / Facility

AIRPORT - TAXIWAY A REHABILITATION

PROJECT NUMBER 2667 **COUNCIL WARD** 3
PROJECT CATEGORY Airport
PROJECT LOCATION Riverside Municipal Airport, 6951 Flight Road

PROJECT DESCRIPTION
Taxiway A was reconstructed in 2007 and runs parallel to Runway 9/27 located on the north side of the airport and is the main taxiway used for airport operations. Years of weathering and sub-base failure have impacted the surface of the 5,401 feet taxiway and has a direct impact on airport operations. Additionally, Taxiway A provides access to Runway 9/27 and tenant hangars located on the east side of the airport. Without access to Runway 9/27 large planes and jets would not have the ability to take off and land at Riverside Municipal Airport impacting the Airport's performance and Federal funding.

PROJECT STATUS
Design phase for the Taxiway A Rehabilitation will take place in Fiscal Year 2023/24 and construction phase in Fiscal Year 2024/25. Remaining project funds will be obtained through FAA and State grants and will be appropriated when the grants are awarded. Both FAA and State Design grants are anticipated to be awarded in Fiscal Year 2023/24 and construction grants anticipated to be awarded in Fiscal Year 2024/25.

OPERATING BUDGET IMPACT
Following rehabilitation, there will be no significant fiscal impact from Taxiway A aside from general weed abatement and professional services associated with re-paint of taxiway striping, and annual safety-light maintenance, both of which are currently budgeted to maintain the existing runway.

PROJECT FUNDING OVERVIEW

Total Project Cost	Prior Years Funding	Five Year Plan	REMAINING NEEDED
$600,000	$0	$100,000	**$500,000**

PROPOSED 2-YEAR BUDGET AND 5-YEAR PLAN

Fund	Funding Source	2018/19	2019/20	2020/21	2021/22	2022/23	TOTAL
530	Airport Fund	-	-	-	-	$5,500	$5,500
*Grant**	*Federal Capital Grants*	-	-	-	-	*90,000*	*90,000*
*Grant**	*State Capital Grants*	-	-	-	-	*4,500*	*4,500*
	TOTAL	**$0**	**$0**	**$0**	**$0**	**$100,000**	**$100,000**

**Appropriation of funds contingent on grant award. For planning purposes only. Not included in in other areas of the CIP.*

PRIORITIZATION CATEGORIES

- ☒ Risk to Health, Safety and Environment
- ☒ Regulatory or Mandated Requirements
- ☒ Asset Condition, Annual Recurring Costs and Asset Longevity
- ☐ Community Investment and Economic Prosperity
- ☒ Level and Quality of Service
- ☐ Sustainability and Conservation
- ☐ Funding Availability
- ☒ Project Readiness
- ☒ Multiple Category Benefit and Bundling Opportunities

NEW OR EXISTING

- ☐ New Infrastructure / Facility
- ☒ Existing Infrastructure / Facility

AIRPORT - TAXIWAY J REHABILITATION

PROJECT NUMBER 2668 **COUNCIL WARD** 3

PROJECT CATEGORY Airport

PROJECT LOCATION Riverside Municipal Airport, 6951 Flight Road

PROJECT DESCRIPTION

Taxiway J was developed in 1987 and runs parallel to Runway 16/34 allowing planes to land during Santa Ana crosswinds on the southwest side of the airport. Major construction to Taxiway J was completed in 2004 with the extension of the taxiway. Years of weathering and sub-base failure have impacted the taxiway which is cracked and damaged. In addition to providing access to Runway 16/34, Taxiway J provides access to tenant hangars located on the north side of the airport. City fund portion to be funded by Airport Fund Balance.

PROJECT STATUS

Design phase will occur in Fiscal Year 2018/19 and construction phase will occur in Fiscal Year 2020/21. Remaining project funds will be obtained through FAA and State grants and will be appropriated toward the project when grants are awarded. Anticipated FAA and State Design grants awarded in Fiscal Year 2018/19 with construction in Fiscal Year 2020/21.

OPERATING BUDGET IMPACT

Following rehabilitation there will be no significant fiscal impact from Taxiway J aside from general weed abatement, professional services associated with re-paint of taxiway striping, and annual safety-light maintenance, all of which are currently budgeted to maintain the existing runway.

PROJECT FUNDING OVERVIEW

Total Project Cost	Prior Years Funding	Five Year Plan	REMAINING NEEDED
$1,665,000	$0	$1,665,000	**$0**

PROPOSED 2-YEAR BUDGET AND 5-YEAR PLAN

Fund	Funding Source	2018/19	2019/20	2020/21	2021/22	2022/23	TOTAL
530	Airport Fund	$9,075	-	$82,500	-	-	$91,575
*Grant**	*Federal Capital Grants*	*148,500*	-	*1,350,000*	-	-	*1,498,500*
*Grant**	*State Capital Grants*	*7,425*	-	*67,500*	-	-	*74,925*
	TOTAL	**$165,000**	**$0**	**$1,500,000**	**$0**	**$0**	**$1,665,000**

**Appropriation of funds contingent on grant award. For planning purposes only. Not included in in other areas of the CIP.*

PRIORITIZATION CATEGORIES

- ☒ Risk to Health, Safety and Environment
- ☐ Regulatory or Mandated Requirements
- ☒ Asset Condition, Annual Recurring Costs and Asset Longevity
- ☐ Community Investment and Economic Prosperity
- ☒ Level and Quality of Service
- ☐ Sustainability and Conservation
- ☒ Funding Availability
- ☒ Project Readiness
- ☒ Multiple Category Benefit and Bundling Opportunities

NEW OR EXISTING

- ☐ New Infrastructure / Facility
- ☒ Existing Infrastructure / Facility

AIRPORT FACILITIES TERMINAL PATIO DECK

PROJECT NUMBER 9034 **COUNCIL WARD** 3
PROJECT CATEGORY Airport
PROJECT LOCATION Riverside Municipal Airport, 6951 Flight Road

PROJECT DESCRIPTION
The Airport terminal building was originally built in 1968 and featured a patio deck that allowed patrons to view runway operations. The patio deck serves as an entrance/exit to the terminal building second floor and viewing area for guests with limited mobility. Major repairs to the deck were made in 1998 and minor repairs have been made over the past five years including the removal of the eastern staircase and rehabilitation of the western staircase. Years of sun exposure, termite damage, and aging of the structure has resulted in an unusable deck. The current structure requires a seismic study and design plan to reconstruct the patio deck.

PROJECT STATUS
Project design will take place in Fiscal Year 2017/18 and with construction in Fiscal Year 2018/19.

OPERATING BUDGET IMPACT
Minor ongoing maintenance will be required including professional services associated with painting of structure, both of which are currently budgeted to maintain the existing deck.

PROJECT FUNDING OVERVIEW

Total Project Cost	Prior Years Funding	Five Year Plan	REMAINING NEEDED
$150,000	$50,000	$100,000	$0

PROPOSED 2-YEAR BUDGET AND 5-YEAR PLAN

Fund	Funding Source	2018/19	2019/20	2020/21	2021/22	2022/23	TOTAL
530	Airport Fund	$100,000	-	-	-	-	$100,000
	TOTAL	$100,000	$0	$0	$0	$0	$100,000

PRIORITIZATION CATEGORIES

- ☒ Risk to Health, Safety and Environment
- ☐ Regulatory or Mandated Requirements
- ☒ Asset Condition, Annual Recurring Costs and Asset Longevity
- ☒ Community Investment and Economic Prosperity
- ☒ Level and Quality of Service
- ☐ Sustainability and Conservation
- ☒ Funding Availability
- ☒ Project Readiness
- ☒ Multiple Category Benefit and Bundling Opportunities

NEW OR EXISTING

- ☐ New Infrastructure / Facility
- ☒ Existing Infrastructure / Facility

APRON ASPHALT PROJECT PHASE I

PROJECT NUMBER 9038 **COUNCIL WARD** 3
PROJECT CATEGORY Airport
PROJECT LOCATION Riverside Municipal Airport, 6951 Flight Road

PROJECT DESCRIPTION
The Apron Asphalt Project will be consist of project phases. Phase One will include the Upper Port-A-Port apron which is located on the northeast side of the Air Traffic Control tower. The approximate 160,060 square feet apron was originally constructed in 1984 to accommodate a multi-unit ground lease housing 17 privately owned hangars and 24 tie-down spaces. Years of weathering and sub-base failure have impacted the apron which is cracked and damaged. City fund portion to be funded by Airport Fund Balance.

PROJECT STATUS
Phase one of the Apron Asphalt Project will include the apron area located in the Lower Port-A-Port and will take place in Fiscal Year 2018/19. The project will consist of crack seal asphalt repair, slurry, and painting of tie downs and taxiways. Completion anticipated winter 2018.

OPERATING BUDGET IMPACT
Following project completion there will be no significant fiscal impact to maintain the asphalt.

PROJECT FUNDING OVERVIEW

Total Project Cost	Prior Years Funding	Five Year Plan	REMAINING NEEDED
$100,000	$0	$100,000	**$0**

PROPOSED 2-YEAR BUDGET AND 5-YEAR PLAN

Fund	Funding Source	2018/19	2019/20	2020/21	2021/22	2022/23	TOTAL
530	Airport Fund	$100,000	-	-	-	-	$100,000
	TOTAL	**$100,000**	**$0**	**$0**	**$0**	**$0**	**$100,000**

PRIORITIZATION CATEGORIES

- ☒ Risk to Health, Safety and Environment
- ☐ Regulatory or Mandated Requirements
- ☐ Asset Condition, Annual Recurring Costs and Asset Longevity
- ☐ Community Investment and Economic Prosperity
- ☐ Level and Quality of Service
- ☐ Sustainability and Conservation
- ☒ Funding Availability
- ☒ Project Readiness
- ☒ Multiple Category Benefit and Bundling Opportunities

NEW OR EXISTING

- ☒ New Infrastructure / Facility
- ☐ Existing Infrastructure / Facility

AIRPORT – CAMERA SYSTEM

PROJECT NUMBER 9039 **COUNCIL WARD** 3
PROJECT CATEGORY Airport
PROJECT LOCATION Riverside Municipal Airport, 6951 Flight Road

PROJECT DESCRIPTION
The Airport Camera System Project will consist of procurement and installation of 19 fixed cameras at various locations throughout Riverside Municipal Airport. The cameras will provide assistance with maintaining security at the airport in key locations including access gates, airport apron and designated airport facilities. The objective of the Airport Camera System project is to update the existing camera system to current industry standards in alignment with the City's existing camera operating system and data firewall.

PROJECT STATUS
The Airport Camera System Project will begin in July 2018 and conclude upon installation and activation of cameras.

OPERATING BUDGET IMPACT
Impact to the operating budget would consist of an annual licensing fee estimated at $500.

PROJECT FUNDING OVERVIEW

Total Project Cost	Prior Years Funding	Five Year Plan	REMAINING NEEDED
$50,000	$0	$50,000	**$0**

PROPOSED 2-YEAR BUDGET AND 5-YEAR PLAN

Fund	Funding Source	2018/19	2019/20	2020/21	2021/22	2022/23	TOTAL
530	Airport Fund	$50,000	-	-	-	-	$50,000
	TOTAL	**$50,000**	**$0**	**$0**	**$0**	**$0**	**$50,000**

CITY OF RIVERSIDE

CAPITAL IMPROVEMENT PROGRAM

ELECTRIC

NOTES

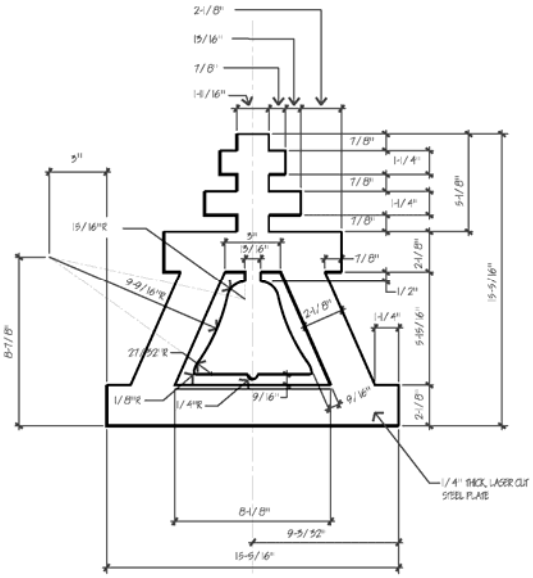
2-1/8"
15/16"
7/8"
1-11/16"
3"
15/16"R
9-9/16"R
8-7/8"
27-52"R
1/8"R
1/4"R
9/16"
9/16"
7/8"
1-1/4"
7/8"
1-1/4"
7/8"
5-1/8"
3"
15/16"
7/8"
2-1/8"
1/2"
2-1/8"
1-1/4"
5-15/16"
15-9/16"
2-1/8"
1/4" THICK, LASER CUT STEEL PLATE
8-1/8"
9-5/32"
15-9/16"

Project Category Overview: Electric

Introduction

The Public Utilities Department is responsible for providing electric service to customers with a service area population of approximately 327,000, encompassing 82 square miles.

Electric service is provided to 109,300 metered customers. The Public Utilities Department owns, maintains, and operates 99 circuit miles of transmission lines, 1,339 circuit miles of distribution lines, 14 substations, and three power generating plants totaling 265.5 megawatts.

The Department provides the highest quality, reliable electric utility services for our customers at the lowest rates possible to benefit the community, while maintaining a financially sound utility. Compared to other local utilities, Riverside's rates are lower, reliability is higher, and more funds are returned to the local community in the way of low-income assistance, rebates, and community support. The Department is committed to renewable power, energy conservation, and community education.

Proposed Two-Year Budget and Five-Year Plan

The five-year Capital Improvement Plan (CIP) for the electric system totaling $196,426,000 is required to implement the ten-year electric infrastructure plan which includes maintaining the most vital infrastructure.

This CIP is supported by the Electric Utility's proposed rate plan and addresses the need to replace and refurbish the most vital portions of Riverside's aging electric infrastructure from Fiscal year 2018/19 through Fiscal Year 2022/23,

Project Category Overview: Electric

including funding to replace substation transformers, various overhead equipment such as poles and wires, and underground cable, conduits, and switches. It also includes funding to implement various technology, security and system automation tools and applications to improve cyber security and overall efficiency.

Major Project Type:

Overhead - Projects to rehabilitate and replace overhead equipment, such as poles, wires, transformers, and streetlights to improve safety, efficiency and reliability of the electric system.

Recurring/Obligation to Serve - Recurring projects related to the Electric Utility's obligation to serve new incoming load.

Substation - Projects related to neighborhood power stations to efficiently distribute power throughout the service area.

System Automation - Technology, security and system automation tools and applications to improve cyber security and overall efficiency.

Underground - Projects to rehabilitate and replace underground conduits, cables, and related equipment to improve safety, efficiency and reliability of the electric system.

Key Revenues and Funding Sources

Table 1: Funding Sources

Fund	Funding Source	Proposed 2018/19	Proposed 2019/20	Proposed 2020/21	Proposed 2021/22	Proposed 2022/23	Total
510	Electric Fund	32,390,952	34,416,523	38,468,201	42,717,438	48,432,978	$196,426,092
	TOTAL	**$32,390,952**	**$34,416,523**	**$38,468,201**	**$42,717,438**	**$48,432,978**	**$196,426,092**

The five-year Electric CIP will be supported by various funding sources. The the majority of the CIP, $156.4 million will be funded by bond proceeds. Approximately $10.9 million will be funded from reserves, approximately $17.0 million will be funded from rates, and $12.1 million will be funded from contributions in aid of construction.

Project Category Overview: Electric

Projects by Major Type of Improvement

Table 2: Schedule of Projects by Major Type of Improvement

Project Type/Project Name	Proposed 2018/19	Proposed 2019/20	Proposed 2020/21	Proposed 2021/22	Proposed 2022/23	Total
Overhead						
General Order 165 (GO 165) Upgrades/Line Rebuilds/Relocate-Overhead	2,284,874	2,349,993	2,193,175	2,255,680	2,319,967	$11,403,689
Major 4-12 kV Conversion	2,327,927	1,849,532	2,339,759	3,272,762	3,063,092	$12,853,072
Neighborhood Street Light Retrofit	2,690,017	2,502,308	1,286,812	978,229	1,006,108	$8,463,474
Transformers	698,156	685,415	867,087	1,212,847	1,135,146	$4,598,651
Total Overhead	**$8,000,974**	**$7,387,248**	**$6,686,833**	**$7,719,518**	**$7,524,313**	**$37,318,886**
Recurring/Obligation to Serve						
Cable Replacement	200,000	500,000	500,000	500,000	500,000	$2,200,000
Citywide Communications	400,000	1,338,000	1,338,000	1,338,000	1,338,000	$5,752,000
Distribution Line Extensions	200,000	200,000	200,000	200,000	200,000	$1,000,000
Distribution Automation	150,000	300,000	300,000	300,000	300,000	$1,350,000
Line Rebuilds	811,328	1,500,000	1,500,000	1,750,000	1,900,000	$7,461,328
Major Feeders	500,000	1,000,000	1,000,000	1,000,000	1,150,000	$4,650,000
Major Overhead/Underground Conversions	500,000	500,000	500,000	500,000	500,000	$2,500,000
Major Street Light Projects	300,000	300,000	300,000	300,000	300,000	$1,500,000
Major Tract Distribution	300,000	300,000	300,000	300,000	300,000	$1,500,000
Major Transmission Line Projects	300,000	300,000	300,000	300,000	300,000	$1,500,000
Meters	300,000	300,000	300,000	300,000	300,000	$1,500,000
Services	400,000	400,000	400,000	400,000	400,000	$2,000,000
Street Lighting	300,000	300,000	300,000	300,000	300,000	$1,500,000
Supervisory Control and Data Acquisition (SCADA)	600,000	600,000	600,000	600,000	600,000	$3,000,000
Transformers	1,350,000	2,900,164	3,206,201	3,270,962	3,294,693	$14,022,020
Total Recurring/Obligation to Serve	**$6,611,328**	**$10,738,164**	**$11,044,201**	**$11,358,962**	**$11,682,693**	**$51,435,348**
Substation						
Substation Bus & Upgrades	1,281,265	923,841	997,679	790,107	999,529	$4,992,421
Substation Innovation	1,665,800	1,672,031	1,805,332	1,430,357	1,808,664	$8,382,184
Substation Transformer Addition	2,115,625	2,175,920	2,349,830	1,860,936	2,354,187	$10,856,498
System Substation Modifications	190,406	195,833	201,414	180,224	223,259	$991,136
Total Substation	**$5,253,096**	**$4,967,625**	**$5,354,255**	**$4,261,624**	**$5,385,639**	**$25,222,239**
System Automation						
Advanced Distribution Management System	-	-	895,173	920,686	946,925	$2,762,784
Advanced Metering Infrastructure	-	2,719,900	2,797,417	-	-	$5,517,317
Distribution Line Extensions	528,906	543,980	559,483	575,429	591,828	$2,799,626
Distribution Automation	-	-	-	690,514	1,420,388	$2,110,902
Land Mobile Radio	-	-	-	598,446	-	$598,446
Major Street Light Projects	3,966,796	-	-	-	-	$3,966,796
Network Communication System	846,250	1,087,960	1,118,967	1,150,857	1,183,657	$5,387,691
Operational Technology Governance	220,024	226,295	232,746	239,379	430,852	$1,349,296
Outage Management System	-	-	257,362	690,514	710,194	$1,658,070
Substation Bus & Upgrades	-	435,184	447,587	471,851	755,173	$2,109,795
Work, Asset, & Inventory Mgmt System	486,594	652,776	671,380	2,071,543	2,367,313	$6,249,606
Total Automation	**$6,048,570**	**$5,666,095**	**$6,980,115**	**$7,409,219**	**$8,406,330**	**$34,510,329**
Underground						
Cable Replacement	3,234,790	2,322,794	4,095,195	5,669,952	7,120,438	$22,443,169

Project Category Overview: Electric

Project Type/Project Name	Proposed 2018/19	Proposed 2019/20	Proposed 2020/21	Proposed 2021/22	Proposed 2022/23	Total
Underground (cont.)						
Cable Replacement – Public Works Street Rehabilitation	211,562	217,592	331,214	476,915	618,039	$1,855,322
Distribution Line Extensions	1,057,812	1,087,960	1,387,519	1,767,717	2,136,927	$7,437,935
GO 165 Upgrades/Line Rebuilds/Relocate-Underground	994,344	1,022,682	1,058,122	1,849,179	2,702,265	$7,626,592
Line Rebuilds	978,476	1,006,363	1,530,747	2,204,352	2,856,334	$8,576,272
Total Underground	**$6,476,984**	**$5,657,391**	**$8,402,797**	**$11,968,115**	**$15,434,003**	**$47,939,290**
TOTAL	**$32,390,952**	**$34,416,523**	**$38,468,201**	**$42,717,438**	**$48,432,978**	**$196,426,092**

Unfunded Projects

Table 3: Top Unfunded Projects by Priority

Project Name	Estimated Project Cost	Unfunded Amount
1. Riverside Transmission Reliability Project (RTRP)	162,756,354	60,386,067
2. GIS Upgrades/Integrations, Customer Engagement Portal &Other System Automation	4,015,000	4,015,000
3. Distribution Transformer Load Management System	1,000,000	1,000,000
4. New Arlanza Substation Site	9,500,000	9,500,000
5. Advanced Metering Infrastructure	27,663,930	21,356,613
6. Cable Replacement - Arlington and Arlanza	12,000,000	12,000,000
7. Remote Monitoring of Sub-station Transformers And 69kV Equipment	8,000,000	8,000,000
TOTAL	**$224,935,284**	**$116,257,680**

Electric Utility identified seven capital projects without an identified funding source.

Project Category Overview: Electric

Project Map

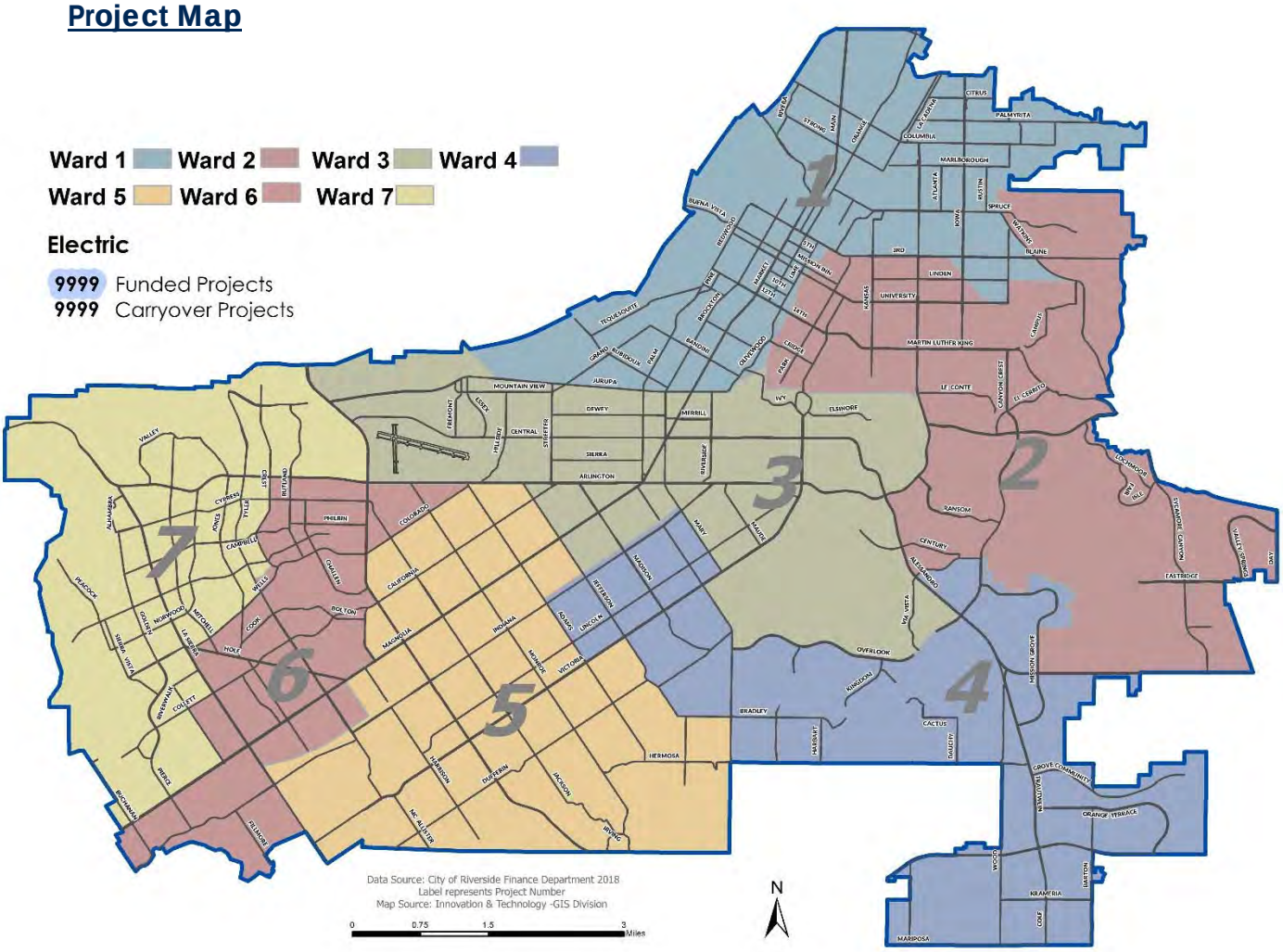

Note: This map includes all active and new capital improvement projects. Ongoing and citywide projects are not included on the map. To view additional information and detailed maps, please visit the City's website at https://riverside.openbook.questica.com.

Graph 1: Distribution by Ward

Ward	Five-Year Total
Ward 1	-
Ward 2	-
Ward 3	-
Ward 4	-
Ward 5	-
Ward 6	-
Ward 7	-
All Wards	196,426,092
Total	**$196,426,092**

NOTES

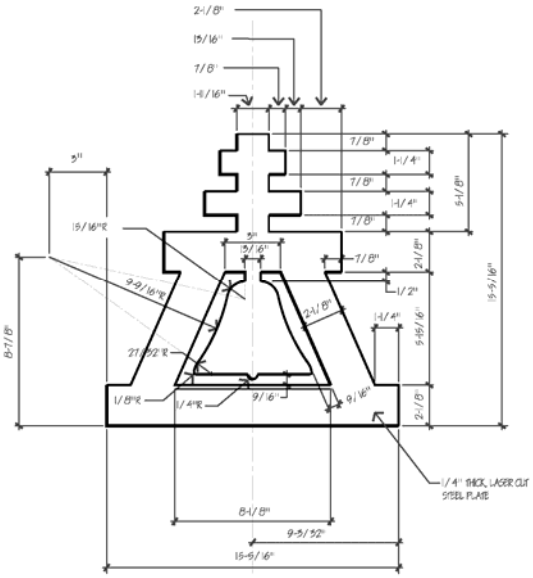
2-1/8"
15/16"
7/8"
1-11/16"
3"
15/16"R
9-9/16"R
27-9/32"R
1/8"R
1/4"R
9/16"
9/16"
7/8"
1-1/4"
7/8"
1-1/4"
7/8"
5-1/8"
7/8"
2-1/8"
1/2"
1-1/4"
5-15/16"
2-1/8"
15-9/16"
8-7/8"
1/4" THICK, LASER CUT STEEL PLATE
8-1/8"
9-9/32"
15-9/16"

PRIORITIZATION CATEGORIES

- ☐ Risk to Health, Safety and Environment
- ☐ Regulatory or Mandated Requirements
- ☒ Asset Condition, Annual Recurring Costs and Asset Longevity
- ☐ Community Investment and Economic Prosperity
- ☒ Level and Quality of Service
- ☐ Sustainability and Conservation
- ☐ Funding Availability
- ☐ Project Readiness
- ☒ Multiple Category Benefit and Bundling Opportunities

NEW OR EXISTING

- ☒ New Infrastructure / Facility
- ☒ Existing Infrastructure / Facility

DISTRIBUTION LINE EXTENSIONS

PROJECT NUMBER 470601 **COUNCIL WARD** All Wards
PROJECT CATEGORY Electric Utility
PROJECT LOCATION Citywide

PROJECT DESCRIPTION
Installation and extension of primary overhead and underground distribution lines to serve new residential, commercial, and industrial customers, as well as existing customer upgrades. Installation and extension of primary overhead and underground distribution lines to serve new Electric Vehicle (EV) charging stations. Design of line extensions complements existing facilities and considers overall area electrical load requirements.

PROJECT STATUS
Ongoing installation of new primary distribution lines, which contributes to fulfilling our obligation to serve electric load requirements within the city service area.

OPERATING BUDGET IMPACT
Not identifiable for ongoing project.

PROJECT FUNDING OVERVIEW

Total Project Cost	Prior Years Funding *	Five Year Plan	REMAINING NEEDED
Ongoing	$66,644,494	$11,237,561	Ongoing

PROPOSED 2-YEAR BUDGET AND 5-YEAR PLAN

Fund	Funding Source	2018/19	2019/20	2020/21	2021/22	2022/23	TOTAL
510	Electric Fund	$1,786,718	$1,831,940	$2,147,002	$2,543,146	$2,928,755	$11,237,561
	TOTAL	**$1,786,718**	**$1,831,940**	**$2,147,002**	**$2,543,146**	**$2,928,755**	**$11,237,561**

* Prior Years Funding includes appropriations and adjustments to appropriations, from July 1994 to March 2018

PRIORITIZATION CATEGORIES

- ☒ Risk to Health, Safety and Environment
- ☐ Regulatory or Mandated Requirements
- ☒ Asset Condition, Annual Recurring Costs and Asset Longevity
- ☐ Community Investment and Economic Prosperity
- ☒ Level and Quality of Service
- ☐ Sustainability and Conservation
- ☐ Funding Availability
- ☐ Project Readiness
- ☒ Multiple Category Benefit and Bundling Opportunities

NEW OR EXISTING

- ☒ New Infrastructure / Facility
- ☒ Existing Infrastructure / Facility

LINE REBUILD

PROJECT NUMBER 470603
COUNCIL WARD All Wards
PROJECT CATEGORY Electric Utility
PROJECT LOCATION Citywide

PROJECT DESCRIPTION
Replacement for end-of-life distribution line equipment and reconfiguration of overhead and underground distribution lines. Includes replacement of older oil-filled underground switches. Projects reduce hazardous materials, add system flexibility, and support electric reliability goals.

PROJECT STATUS
Ongoing replacement of primary distribution lines, which contributes to fulfilling our obligation to serve electric load requirements within the city service area.

OPERATING BUDGET IMPACT
Not identifiable for ongoing project.

PROJECT FUNDING OVERVIEW

Total Project Cost	Prior Years Funding *	Five Year Plan	REMAINING NEEDED
Ongoing	$33,757,991	$16,037,600	Ongoing

PROPOSED 2-YEAR BUDGET AND 5-YEAR PLAN

Fund	Funding Source	2018/19	2019/20	2020/21	2021/22	2022/23	TOTAL
510	Electric Fund	$1,789,804	$2,506,363	$3,030,747	$3,954,352	$4,756,334	$16,037,600
	TOTAL	**$1,789,804**	**$2,506,363**	**$3,030,747**	**$3,954,352**	**$4,756,334**	**$16,037,600**

* Prior Years Funding includes appropriations and adjustments to appropriations, from July 1994 to March 2018

PRIORITIZATION CATEGORIES

- ☒ Risk to Health, Safety and Environment
- ☐ Regulatory or Mandated Requirements
- ☒ Asset Condition, Annual Recurring Costs and Asset Longevity
- ☐ Community Investment and Economic Prosperity
- ☒ Level and Quality of Service
- ☐ Sustainability and Conservation
- ☐ Funding Availability
- ☐ Project Readiness
- ☒ Multiple Category Benefit and Bundling Opportunities

NEW OR EXISTING

- ☒ New Infrastructure / Facility
- ☒ Existing Infrastructure / Facility

STREET LIGHTING

PROJECT NUMBER 470607
COUNCIL WARD All Wards
PROJECT CATEGORY Electric Utility
PROJECT LOCATION Citywide

PROJECT DESCRIPTION
Installation of equipment for minor system needs. This project does not include major street light projects. Design complements existing facilities and considers overall area lighting needs and current design standards.

PROJECT STATUS
Ongoing installation of minor street light needs, which contributes to fulfilling our obligation to meet lighting standards and contribute to safe environments within the city service area.

OPERATING BUDGET IMPACT
Not identifiable for ongoing project.

PROJECT FUNDING OVERVIEW

Total Project Cost	Prior Years Funding *	Five Year Plan	REMAINING NEEDED
Ongoing	$5,256,025	$1,500,000	Ongoing

PROPOSED 2-YEAR BUDGET AND 5-YEAR PLAN

Fund	Funding Source	2018/19	2019/20	2020/21	2021/22	2022/23	TOTAL
510	Electric Fund	$300,000	$300,000	$300,000	$300,000	$300,000	$1,500,000
	TOTAL	$300,000	$300,000	$300,000	$300,000	$300,000	$1,500,000

* Prior Years Funding includes appropriations and adjustments to appropriations, from July 1994 to March 2018

PRIORITIZATION CATEGORIES

- ☐ Risk to Health, Safety and Environment
- ☐ Regulatory or Mandated Requirements
- ☒ Asset Condition, Annual Recurring Costs and Asset Longevity
- ☐ Community Investment and Economic Prosperity
- ☒ Level and Quality of Service
- ☐ Sustainability and Conservation
- ☐ Funding Availability
- ☐ Project Readiness
- ☒ Multiple Category Benefit and Bundling Opportunities

NEW OR EXISTING

- ☒ New Infrastructure / Facility
- ☒ Existing Infrastructure / Facility

SYSTEM SUBSTATION MODIFICATIONS

PROJECT NUMBER 470608 **COUNCIL WARD** All Wards
PROJECT CATEGORY Electric Utility
PROJECT LOCATION Citywide

PROJECT DESCRIPTION
Projects include modifications, replacements, and improvements of substation equipment and protection devices for minor system needs. This project does not include major substation modifications or projects. Design of substation components complements existing facilities and improves overall system operation.

PROJECT STATUS
Ongoing replacement and minor modifications to substation equipment, which contributes to fulfilling our obligation to serve electric load requirements within the city service area.

OPERATING BUDGET IMPACT
Not identifiable for ongoing project.

PROJECT FUNDING OVERVIEW

Total Project Cost	Prior Years Funding *	Five Year Plan	REMAINING NEEDED
Ongoing	$2,528,431	$991,136	Ongoing

PROPOSED 2-YEAR BUDGET AND 5-YEAR PLAN

Fund	Funding Source	2018/19	2019/20	2020/21	2021/22	2022/23	TOTAL
510	Electric Fund	$190,406	$195,833	$201,414	$180,244	$223,259	$991,136
	TOTAL	$190,406	$195,833	$201,414	$180,244	$223,259	$991,136

* Prior Years Funding includes appropriations and adjustments to appropriations, from July 1994 to March 2018

PRIORITIZATION CATEGORIES

- ☐ Risk to Health, Safety and Environment
- ☐ Regulatory or Mandated Requirements
- ☒ Asset Condition, Annual Recurring Costs and Asset Longevity
- ☐ Community Investment and Economic Prosperity
- ☒ Level and Quality of Service
- ☐ Sustainability and Conservation
- ☐ Funding Availability
- ☐ Project Readiness
- ☒ Multiple Category Benefit and Bundling Opportunities

NEW OR EXISTING

- ☒ New Infrastructure / Facility
- ☒ Existing Infrastructure / Facility

TRANSFORMERS

PROJECT NUMBER	470611	**COUNCIL WARD**	All Wards
PROJECT CATEGORY	Electric Utility		
PROJECT LOCATION	Citywide		

PROJECT DESCRIPTION
Enables the purchase of transformers for new residential, commercial, and industrial services as well as customer load additions. Also, includes purchase and installation of transformers to replace existing transformers found to be inoperable or damaged. Analysis of overall area load requirements are taken into account prior to upgrading or replacing transformers.

PROJECT STATUS
Ongoing purchase of distribution transformers, which contributes to fulfilling our obligation to serve electric load requirements within the city service area.

OPERATING BUDGET IMPACT
Not identifiable for ongoing project.

PROJECT FUNDING OVERVIEW

Total Project Cost	Prior Years Funding *	Five Year Plan	REMAINING NEEDED
Ongoing	$35,826,240	$18,620,671	Ongoing

PROPOSED 2-YEAR BUDGET AND 5-YEAR PLAN

Fund	Funding Source	2018/19	2019/20	2020/21	2021/22	2022/23	TOTAL
510	Electric Fund	$2,048,156	$3,585,579	$4,073,288	$4,483,809	$4,429,839	$18,620,671
	TOTAL	**$2,048,156**	**$3,585,579**	**$4,073,288**	**$4,483,809**	**$4,429,839**	**$18,620,671**

* Prior Years Funding includes appropriations and adjustments to appropriations, from July 1994 to March 2018

PRIORITIZATION CATEGORIES

- ☐ Risk to Health, Safety and Environment
- ☐ Regulatory or Mandated Requirements
- ☒ Asset Condition, Annual Recurring Costs and Asset Longevity
- ☐ Community Investment and Economic Prosperity
- ☒ Level and Quality of Service
- ☐ Sustainability and Conservation
- ☐ Funding Availability
- ☐ Project Readiness
- ☒ Multiple Category Benefit and Bundling Opportunities

NEW OR EXISTING

- ☒ New Infrastructure / Facility
- ☐ Existing Infrastructure / Facility

CAPACITORS-REGULATORS

PROJECT NUMBER	470612	**COUNCIL WARD**	All Wards
PROJECT CATEGORY	Electric Utility		
PROJECT LOCATION	Citywide		

PROJECT DESCRIPTION
Includes the purchase and installation of new capacitors and regulator devices to maintain electric power quality to Riverside customers. Locations are prioritized based on comprehensive analysis of power quality modeling and system parameters. The design of these equipment installations complements existing facilities and considers overall area electrical requirements.

PROJECT STATUS
Ongoing purchase and installation of distribution system capacitors and regulators, which contributes to fulfilling our obligation to serve electric load requirements within the city service area.

OPERATING BUDGET IMPACT
No impact for ongoing projects.

PROJECT FUNDING OVERVIEW

Total Project Cost	Prior Years Funding *	Five Year Plan	REMAINING NEEDED
Ongoing	$475,691	$0	Ongoing

PROPOSED 2-YEAR BUDGET AND 5-YEAR PLAN

Fund	Funding Source	2018/19	2019/20	2020/21	2021/22	2022/23	TOTAL
		-	-	-	-	-	$0
	TOTAL	$0	$0	$0	$0	$0	$0

* Prior Years Funding includes appropriations and adjustments to appropriations, from July 1994 to March 2018

PRIORITIZATION CATEGORIES

- ☐ Risk to Health, Safety and Environment
- ☐ Regulatory or Mandated Requirements
- ☒ Asset Condition, Annual Recurring Costs and Asset Longevity
- ☐ Community Investment and Economic Prosperity
- ☒ Level and Quality of Service
- ☐ Sustainability and Conservation
- ☐ Funding Availability
- ☐ Project Readiness
- ☒ Multiple Category Benefit and Bundling Opportunities

NEW OR EXISTING

- ☒ New Infrastructure / Facility
- ☒ Existing Infrastructure / Facility

METERS

PROJECT NUMBER	470613	**COUNCIL WARD**	All Wards
PROJECT CATEGORY	Electric Utility		
PROJECT LOCATION	Citywide		

PROJECT DESCRIPTION
Includes the purchase and installation of meter equipment for new residential, commercial, and industrial services. This project also includes the purchase and installation of meters to replace existing meters that are inoperable or damaged. Meters are upgraded to current standards when serviced.

PROJECT STATUS
Ongoing purchase and installation of meter equipment, which contributes to fulfilling our obligation to serve electric load requirements within the city service area.

OPERATING BUDGET IMPACT
Not identifiable for ongoing project.

PROJECT FUNDING OVERVIEW

Total Project Cost	Prior Years Funding *	Five Year Plan	REMAINING NEEDED
Ongoing	$7,336,083	$1,500,000	Ongoing

PROPOSED 2-YEAR BUDGET AND 5-YEAR PLAN

Fund	Funding Source	2018/19	2019/20	2020/21	2021/22	2022/23	TOTAL
510	Electric Fund	$300,000	$300,000	$300,000	$300,000	$300,000	$1,500,000
	TOTAL	**$300,000**	**$300,000**	**$300,000**	**$300,000**	**$300,000**	**$1,500,000**

* Prior Years Funding includes appropriations and adjustments to appropriations, from July 1994 to March 2018

PRIORITIZATION CATEGORIES

- ☐ Risk to Health, Safety and Environment
- ☐ Regulatory or Mandated Requirements
- ☐ Asset Condition, Annual Recurring Costs and Asset Longevity
- ☐ Community Investment and Economic Prosperity
- ☒ Level and Quality of Service
- ☐ Sustainability and Conservation
- ☐ Funding Availability
- ☒ Project Readiness
- ☒ Multiple Category Benefit and Bundling Opportunities

NEW OR EXISTING

- ☒ New Infrastructure / Facility
- ☐ Existing Infrastructure / Facility

SUBSTATION INNOVATION

PROJECT NUMBER 470614
COUNCIL WARD All Wards
PROJECT CATEGORY Electric Utility
PROJECT LOCATION Citywide

PROJECT DESCRIPTION
Advanced substation protection and control devices, enhanced communication and monitoring systems, autonomous equipment operation, and secure remote access and control.

PROJECT STATUS
Ongoing purchase and installation of equipment for substation protection, control and communication devices which contributes to fulfilling our obligation to serve electric load requirements within the city service area.

OPERATING BUDGET IMPACT
No impact for ongoing projects.

PROJECT FUNDING OVERVIEW

Total Project Cost	Prior Years Funding *	Five Year Plan	REMAINING NEEDED
Ongoing	$0	$8,382,184	Ongoing

PROPOSED 2-YEAR BUDGET AND 5-YEAR PLAN

Fund	Funding Source	2018/19	2019/20	2020/21	2021/22	2022/23	TOTAL
510	Electric Fund	$1,665,800	$1,672,031	$1,805,332	$1,430,357	$1,808,664	$8,382,184
	TOTAL	**$1,665,800**	**$1,672,031**	**$1,805,332**	**$1,430,357**	**$1,808,664**	**$8,382,184**

* Prior Years Funding includes appropriations and adjustments to appropriations, from July 1994 to March 2018

PRIORITIZATION CATEGORIES

- ☐ Risk to Health, Safety and Environment
- ☐ Regulatory or Mandated Requirements
- ☒ Asset Condition, Annual Recurring Costs and Asset Longevity
- ☐ Community Investment and Economic Prosperity
- ☒ Level and Quality of Service
- ☐ Sustainability and Conservation
- ☐ Funding Availability
- ☐ Project Readiness
- ☒ Multiple Category Benefit and Bundling Opportunities

NEW OR EXISTING

- ☒ New Infrastructure / Facility
- ☒ Existing Infrastructure / Facility

SERVICES

PROJECT NUMBER	470615	**COUNCIL WARD**	All Wards
PROJECT CATEGORY	Electric Utility		
PROJECT LOCATION	Citywide		

PROJECT DESCRIPTION
Installation of new services to residential, commercial, and industrial customers. Also includes upgraded services to existing customers with increased electrical requirements. Service designs complement existing facilities and considers overall area electrical load requirements.

PROJECT STATUS
Ongoing purchase of electric service equipment, which contributes to fulfilling our obligation to serve electric load requirements within the city service area.

OPERATING BUDGET IMPACT
Not identifiable for ongoing project.

PROJECT FUNDING OVERVIEW

Total Project Cost	Prior Years Funding *	Five Year Plan	REMAINING NEEDED
Ongoing	$9,081,935	$2,000,000	Ongoing

PROPOSED 2-YEAR BUDGET AND 5-YEAR PLAN

Fund	Funding Source	2018/19	2019/20	2020/21	2021/22	2022/23	TOTAL
510	Electric Fund	$400,000	$400,000	$400,000	$400,000	$400,000	$2,000,000
	TOTAL	**$400,000**	**$400,000**	**$400,000**	**$400,000**	**$400,000**	**$2,000,000**

* Prior Years Funding includes appropriations and adjustments to appropriations, from July 1994 to March 2018

PRIORITIZATION CATEGORIES

- ☐ Risk to Health, Safety and Environment
- ☐ Regulatory or Mandated Requirements
- ☒ Asset Condition, Annual Recurring Costs and Asset Longevity
- ☐ Community Investment and Economic Prosperity
- ☒ Level and Quality of Service
- ☐ Sustainability and Conservation
- ☐ Funding Availability
- ☐ Project Readiness
- ☒ Multiple Category Benefit and Bundling Opportunities

NEW OR EXISTING

- ☒ New Infrastructure / Facility
- ☒ Existing Infrastructure / Facility

SUBSTATION BUS & UPGRADES

PROJECT NUMBER	470616	**COUNCIL WARD**	All Wards
PROJECT CATEGORY	Electric Utility		
PROJECT LOCATION	Citywide		

PROJECT DESCRIPTION
Replaces aging equipment and installs additional equipment necessary to improve the operability and safety of these neighborhood power centers (Substations). This includes system protection, monitoring, automation systems for energized electrical components, perimeter walls, property improvements, addition of new substations, and expansion of existing substations.

PROJECT STATUS
Ongoing replacement and addition of major substation equipment prioritized based upon system load growth as well as age and obsolescence of existing equipment.

OPERATING BUDGET IMPACT
Not identifiable for ongoing project.

PROJECT FUNDING OVERVIEW

Total Project Cost	Prior Years Funding *	Five Year Plan	REMAINING NEEDED
Ongoing	$50,706,291	$7,102,216	Ongoing

PROPOSED 2-YEAR BUDGET AND 5-YEAR PLAN

Fund	Funding Source	2018/19	2019/20	2020/21	2021/22	2022/23	TOTAL
510	Electric Fund	$1,281,265	$1,359,025	$1,445,266	$1,261,958	$1,754,702	$7,102,216
	TOTAL	**$1,281,265**	**$1,359,025**	**$1,445,266**	**$1,261,958**	**$1,754,702**	**$7,102,216**

* Prior Years Funding includes appropriations and adjustments to appropriations, from July 1994 to March 2018

PRIORITIZATION CATEGORIES

- ☐ Risk to Health, Safety and Environment
- ☐ Regulatory or Mandated Requirements
- ☒ Asset Condition, Annual Recurring Costs and Asset Longevity
- ☐ Community Investment and Economic Prosperity
- ☒ Level and Quality of Service
- ☐ Sustainability and Conservation
- ☐ Funding Availability
- ☐ Project Readiness
- ☒ Multiple Category Benefit and Bundling Opportunities

NEW OR EXISTING

- ☒ New Infrastructure / Facility
- ☐ Existing Infrastructure / Facility

MAJOR OVERHEAD/UNDERGROUND CONVERSIONS

PROJECT NUMBER	470619	**COUNCIL WARD**	All Wards
PROJECT CATEGORY	Electric Utility		
PROJECT LOCATION	Citywide		

PROJECT DESCRIPTION
These potential conversions optimize opportunities to place various overhead facilities underground on a limited basis as a part of other projects. Electric facilities are evaluated for improvements to capacity, configuration, and integration with surround facilities during design.

PROJECT STATUS
Ongoing relocation and upgrade of facilities driven by Public Works street projects which contributes to fulfilling our obligation to serve electric load requirements within the city service area.

OPERATING BUDGET IMPACT
Not identifiable for ongoing project.

PROJECT FUNDING OVERVIEW

Total Project Cost	Prior Years Funding *	Five Year Plan	REMAINING NEEDED
Ongoing	$33,865,002	$2,500,000	Ongoing

PROPOSED 2-YEAR BUDGET AND 5-YEAR PLAN

Fund	Funding Source	2018/19	2019/20	2020/21	2021/22	2022/23	TOTAL
510	Electric Fund	$500,000	$500,000	$500,000	$500,000	$500,000	$2,500,000
	TOTAL	**$500,000**	**$500,000**	**$500,000**	**$500,000**	**$500,000**	**$2,500,000**

* Prior Years Funding includes appropriations and adjustments to appropriations, from July 1994 to March 2018

PRIORITIZATION CATEGORIES

- ☐ Risk to Health, Safety and Environment
- ☐ Regulatory or Mandated Requirements
- ☒ Asset Condition, Annual Recurring Costs and Asset Longevity
- ☐ Community Investment and Economic Prosperity
- ☒ Level and Quality of Service
- ☐ Sustainability and Conservation
- ☐ Funding Availability
- ☐ Project Readiness
- ☒ Multiple Category Benefit and Bundling Opportunities

NEW OR EXISTING

- ☒ New Infrastructure / Facility
- ☒ Existing Infrastructure / Facility

MAJOR TRANSMISSION LINE PROJECTS

PROJECT NUMBER	470620	**COUNCIL WARD**	All Wards
PROJECT CATEGORY	Electric Utility		
PROJECT LOCATION	Citywide		

PROJECT DESCRIPTION
Modifications and relocations of 69kV transmission lines associated with substation power transformer additions. Transmission facilities are evaluated for improvements and system efficiencies during design of all projects. Parallel facilities on the same route are also considered for improvement to reduce life cycle cost.

PROJECT STATUS
Ongoing relocation and upgrade of transmission line facilities driven by substation power transformer additions which contributes to fulfilling our obligation to serve electric load requirements within the city service area.

OPERATING BUDGET IMPACT
Not identifiable for ongoing project.

PROJECT FUNDING OVERVIEW

Total Project Cost	Prior Years Funding *	Five Year Plan	REMAINING NEEDED
Ongoing	$1,832,774	$1,500,000	Ongoing

PROPOSED 2-YEAR BUDGET AND 5-YEAR PLAN

Fund	Funding Source	2018/19	2019/20	2020/21	2021/22	2022/23	TOTAL
510	Electric Fund	$300,000	$300,000	$300,000	$300,000	$300,000	$1,500,000
	TOTAL	**$300,000**	**$300,000**	**$300,000**	**$300,000**	**$300,000**	**$1,500,000**

* Prior Years Funding includes appropriations and adjustments to appropriations, from July 1994 to March 2018

PRIORITIZATION CATEGORIES

- ☒ Risk to Health, Safety and Environment
- ☐ Regulatory or Mandated Requirements
- ☒ Asset Condition, Annual Recurring Costs and Asset Longevity
- ☐ Community Investment and Economic Prosperity
- ☒ Level and Quality of Service
- ☐ Sustainability and Conservation
- ☐ Funding Availability
- ☐ Project Readiness
- ☒ Multiple Category Benefit and Bundling Opportunities

NEW OR EXISTING

- ☒ New Infrastructure / Facility
- ☒ Existing Infrastructure / Facility

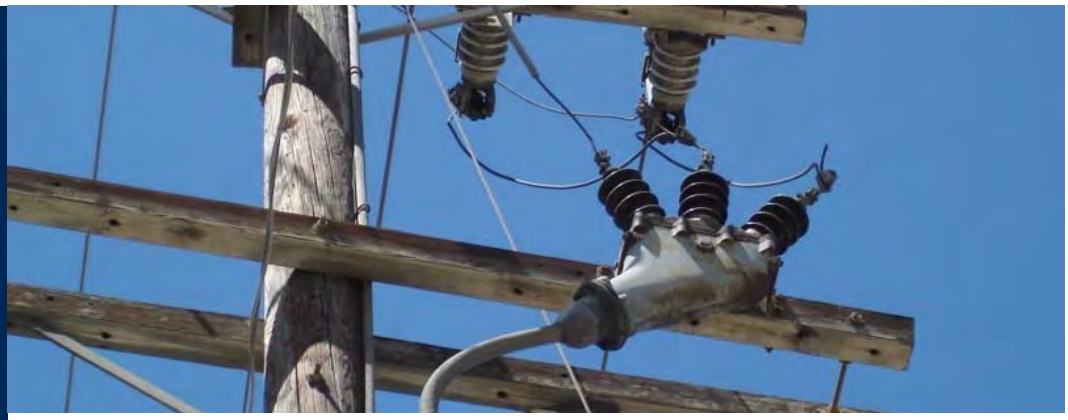

GENERAL ORDER 165 (GO 165) UPGRADES/LINE REBUILDS/RELOCATION-OVERHEAD

PROJECT NUMBER	470623	**COUNCIL WARD**	All Wards
PROJECT CATEGORY	Electric Utility		
PROJECT LOCATION	Citywide		

PROJECT DESCRIPTION
Rehabilitation or replacement of overhead equipment identified as a result of routine facility inspections. Includes pole replacement and infrastructure rehabilitation/replacement. Priorities are established based on condition assessments and relative impact to customers and the system.

PROJECT STATUS
Ongoing replacement and upgrade of overhead facilities prioritized based upon intrusive inspection.

OPERATING BUDGET IMPACT
Not identifiable for ongoing project.

PROJECT FUNDING OVERVIEW

Total Project Cost	Prior Years Funding *	Five Year Plan	REMAINING NEEDED
Ongoing	$12,750,012	$11,403,689	Ongoing

PROPOSED 2-YEAR BUDGET AND 5-YEAR PLAN

Fund	Funding Source	2018/19	2019/20	2020/21	2021/22	2022/23	TOTAL
510	Electric Fund	$2,284,874	$2,349,993	$2,193,175	$2,255,680	$2,319,967	$11,403,689
	TOTAL	**$2,284,874**	**$2,349,993**	**$2,193,175**	**$2,255,680**	**$2,319,967**	**$11,403,689**

* Prior Years Funding includes appropriations and adjustments to appropriations, from July 1994 to March 2018

PRIORITIZATION CATEGORIES

- ☒ Risk to Health, Safety and Environment
- ☐ Regulatory or Mandated Requirements
- ☒ Asset Condition, Annual Recurring Costs and Asset Longevity
- ☐ Community Investment and Economic Prosperity
- ☒ Level and Quality of Service
- ☐ Sustainability and Conservation
- ☐ Funding Availability
- ☐ Project Readiness
- ☒ Multiple Category Benefit and Bundling Opportunities

NEW OR EXISTING

- ☒ New Infrastructure / Facility
- ☒ Existing Infrastructure / Facility

GO 165 UPGRADES/LINE REBUILDS/RELOCATE-UNDERGROUND

PROJECT NUMBER 470624
COUNCIL WARD All Wards
PROJECT CATEGORY Electric Utility
PROJECT LOCATION Citywide

PROJECT DESCRIPTION
Rehabilitation or replacement of underground equipment identified as a result of routine facility inspections. Includes infrastructure rehabilitation/replacement. Priorities are established based upon condition assessment and relative impact to customers and the system.

PROJECT STATUS
Ongoing replacement and upgrade of underground facilities prioritized based upon intrusive inspection.

OPERATING BUDGET IMPACT
Not identifiable for ongoing project.

PROJECT FUNDING OVERVIEW

Total Project Cost	Prior Years Funding *	Five Year Plan	REMAINING NEEDED
Ongoing	$0	$7,626,592	Ongoing

PROPOSED 2-YEAR BUDGET AND 5-YEAR PLAN

Fund	Funding Source	2018/19	2019/20	2020/21	2021/22	2022/23	TOTAL
510	Electric Fund	$994,344	$1,022,682	$1,058,122	$1,849,179	$2,702,265	$7,626,592
	TOTAL	**$994,344**	**$1,022,682**	**$1,058,122**	**$1,849,179**	**$2,702,265**	**$7,626,592**

* Prior Years Funding includes appropriations and adjustments to appropriations, from July 1994 to March 2018

PRIORITIZATION CATEGORIES

- ☐ Risk to Health, Safety and Environment
- ☐ Regulatory or Mandated Requirements
- ☒ Asset Condition, Annual Recurring Costs and Asset Longevity
- ☐ Community Investment and Economic Prosperity
- ☒ Level and Quality of Service
- ☐ Sustainability and Conservation
- ☐ Funding Availability
- ☐ Project Readiness
- ☒ Multiple Category Benefit and Bundling Opportunities

NEW OR EXISTING

- ☒ New Infrastructure / Facility
- ☐ Existing Infrastructure / Facility

MAJOR TRACT DISTRIBUTION

PROJECT NUMBER 470626
COUNCIL WARD All Wards
PROJECT CATEGORY Electric Utility
PROJECT LOCATION Citywide

PROJECT DESCRIPTION
Constructs electric distribution feeders within new residential and commercial tract developments. Additions are designed to supply new customers. These extensions are designed to complement existing facilities and improve overall system operation.

PROJECT STATUS
Ongoing installation of new primary distribution lines within major tract developments which contributes to fulfilling our obligation to serve electric load requirements within the city service area.

OPERATING BUDGET IMPACT
Not identifiable for ongoing project.

PROJECT FUNDING OVERVIEW

Total Project Cost	Prior Years Funding *	Five Year Plan	REMAINING NEEDED
Ongoing	$16,704,261	$1,500,000	Ongoing

PROPOSED 2-YEAR BUDGET AND 5-YEAR PLAN

Fund	Funding Source	2018/19	2019/20	2020/21	2021/22	2022/23	TOTAL
510	Electric Fund	$300,000	$300,000	$300,000	$300,000	$300,000	$1,500,000
	TOTAL	$300,000	$300,000	$300,000	$300,000	$300,000	$1,500,000

* Prior Years Funding includes appropriations and adjustments to appropriations, from July 1994 to March 2018

PRIORITIZATION CATEGORIES

- ☐ Risk to Health, Safety and Environment
- ☐ Regulatory or Mandated Requirements
- ☒ Asset Condition, Annual Recurring Costs and Asset Longevity
- ☐ Community Investment and Economic Prosperity
- ☒ Level and Quality of Service
- ☐ Sustainability and Conservation
- ☐ Funding Availability
- ☐ Project Readiness
- ☒ Multiple Category Benefit and Bundling Opportunities

NEW OR EXISTING

- ☒ New Infrastructure / Facility
- ☒ Existing Infrastructure / Facility

SUBSTATION TRANSFORMER ADDITION

PROJECT NUMBER 470632
COUNCIL WARD All Wards
PROJECT CATEGORY Electric Utility
PROJECT LOCATION Citywide

PROJECT DESCRIPTION
Install new substation power transformers and associated equipment to support upgrades necessitated by load growth and modernization. This project also includes proactive replacement of the oldest power transformers based on condition rating. The design of transformer additions complements existing facilities and improves overall system operation.

PROJECT STATUS
Ongoing replacement and addition of substation transformers prioritized based upon system load growth as well as age and obsolescence of existing equipment.

OPERATING BUDGET IMPACT
Not identifiable for ongoing project.

PROJECT FUNDING OVERVIEW

Total Project Cost	Prior Years Funding *	Five Year Plan	REMAINING NEEDED
Ongoing	$43,499,697	$10,856,498	Ongoing

PROPOSED 2-YEAR BUDGET AND 5-YEAR PLAN

Fund	Funding Source	2018/19	2019/20	2020/21	2021/22	2022/23	TOTAL
510	Electric Fund	$2,115,625	$2,175,920	$2,349,830	$1,860,936	$2,354,187	$10,856,498
	TOTAL	**$2,115,625**	**$2,175,920**	**$2,349,830**	**$1,860,936**	**$2,354,187**	**$10,856,498**

* Prior Years Funding includes appropriations and adjustments to appropriations, from July 1994 to March 2018

PRIORITIZATION CATEGORIES

- ☐ Risk to Health, Safety and Environment
- ☐ Regulatory or Mandated Requirements
- ☒ Asset Condition, Annual Recurring Costs and Asset Longevity
- ☐ Community Investment and Economic Prosperity
- ☒ Level and Quality of Service
- ☐ Sustainability and Conservation
- ☐ Funding Availability
- ☐ Project Readiness
- ☒ Multiple Category Benefit and Bundling Opportunities

NEW OR EXISTING

- ☒ New Infrastructure / Facility
- ☒ Existing Infrastructure / Facility

MAJOR FEEDERS

PROJECT NUMBER	470633	**COUNCIL WARD**	All Wards
PROJECT CATEGORY	Electric Utility		
PROJECT LOCATION	Citywide		

PROJECT DESCRIPTION
Constructs major overhead and underground feeders for electric capacity in various locations. Projects are associated with substation transformer additions and extensions to areas of major load increases. Designs complement existing facilities and improve overall system operations.

PROJECT STATUS
Ongoing installation of new primary feeder lines which contributes to fulfilling our obligation to serve electric load requirements within the city service area.

OPERATING BUDGET IMPACT
Not identifiable for ongoing project.

PROJECT FUNDING OVERVIEW

Total Project Cost	Prior Years Funding *	Five Year Plan	REMAINING NEEDED
Ongoing	$24,831,430	$4,650,000	Ongoing

PROPOSED 2-YEAR BUDGET AND 5-YEAR PLAN

Fund	Funding Source	2018/19	2019/20	2020/21	2021/22	2022/23	TOTAL
510	Electric Fund	$500,000	$1,000,000	$1,000,000	$1,000,000	$1,150,000	$4,650,000
	TOTAL	**$500,000**	**$1,000,000**	**$1,000,000**	**$1,000,000**	**$1,150,000**	**$4,650,000**

* Prior Years Funding includes appropriations and adjustments to appropriations, from July 1994 to March 2018

PRIORITIZATION CATEGORIES

- ☐ Risk to Health, Safety and Environment
- ☐ Regulatory or Mandated Requirements
- ☐ Asset Condition, Annual Recurring Costs and Asset Longevity
- ☒ Community Investment and Economic Prosperity
- ☐ Level and Quality of Service
- ☐ Sustainability and Conservation
- ☐ Funding Availability
- ☐ Project Readiness
- ☐ Multiple Category Benefit and Bundling Opportunities

NEW OR EXISTING

- ☐ New Infrastructure / Facility
- ☒ Existing Infrastructure / Facility

SOUTHERN CALIFORNIA EDISON (SCE) CONDEMNATION COSTS

PROJECT NUMBER	470634	**COUNCIL WARD**	1, 2, 4, 5, 6
PROJECT CATEGORY	Electric Utility		
PROJECT LOCATION	Citywide		

PROJECT DESCRIPTION
Friendly condemnation of existing SCE facilities in areas previously annexed to the City limits. This project includes acquisition of existing electric facilities, easements, and associated legal costs.

PROJECT STATUS
Ongoing costs to purchase electric facilities and easement rights in annexed areas of the city formerly served by SCE.

OPERATING BUDGET IMPACT
No impact for ongoing projects.

PROJECT FUNDING OVERVIEW

Total Project Cost	Prior Years Funding *	Five Year Plan	REMAINING NEEDED
Ongoing	$1,164,280	$0	Ongoing

PROPOSED 2-YEAR BUDGET AND 5-YEAR PLAN

Fund	Funding Source	2018/19	2019/20	2020/21	2021/22	2022/23	TOTAL
		-	-	-	-	-	$0
	TOTAL	$0	$0	$0	$0	$0	$0

* Prior Years Funding includes appropriations and adjustments to appropriations, from July 1994 to March 2018

PRIORITIZATION CATEGORIES

- ☐ Risk to Health, Safety and Environment
- ☐ Regulatory or Mandated Requirements
- ☒ Asset Condition, Annual Recurring Costs and Asset Longevity
- ☐ Community Investment and Economic Prosperity
- ☒ Level and Quality of Service
- ☐ Sustainability and Conservation
- ☐ Funding Availability
- ☐ Project Readiness
- ☒ Multiple Category Benefit and Bundling Opportunities

NEW OR EXISTING

- ☒ New Infrastructure / Facility
- ☒ Existing Infrastructure / Facility

CABLE REPLACEMENT

PROJECT NUMBER 470635
COUNCIL WARD All Wards
PROJECT CATEGORY Electric Utility
PROJECT LOCATION Citywide

PROJECT DESCRIPTION
Replaces aging electric distribution cable with high potential for failure.

PROJECT STATUS
Ongoing replacement of underground cable prioritized based upon outage analysis as well as age and obsolescence of existing equipment.

OPERATING BUDGET IMPACT
Not identifiable for ongoing project.

PROJECT FUNDING OVERVIEW

Total Project Cost	Prior Years Funding *	Five Year Plan	REMAINING NEEDED
Ongoing	$18,476,054	$24,643,169	Ongoing

PROPOSED 2-YEAR BUDGET AND 5-YEAR PLAN

Fund	Funding Source	2018/19	2019/20	2020/21	2021/22	2022/23	TOTAL
510	Electric Fund	$3,434,790	$2,822,794	$4,595,195	$6,169,952	$7,620,438	$24,643,169
	TOTAL	**$3,434,790**	**$2,822,794**	**$4,595,195**	**$6,169,952**	**$7,620,438**	**$24,643,169**

* Prior Years Funding includes appropriations and adjustments to appropriations, from July 1994 to March 2018

PRIORITIZATION CATEGORIES

- ☐ Risk to Health, Safety and Environment
- ☐ Regulatory or Mandated Requirements
- ☒ Asset Condition, Annual Recurring Costs and Asset Longevity
- ☐ Community Investment and Economic Prosperity
- ☒ Level and Quality of Service
- ☐ Sustainability and Conservation
- ☐ Funding Availability
- ☐ Project Readiness
- ☒ Multiple Category Benefit and Bundling Opportunities

NEW OR EXISTING

- ☒ New Infrastructure / Facility
- ☒ Existing Infrastructure / Facility

CABLE REPLACEMENT - PUBLIC WORKS STREET REHAB

PROJECT NUMBER 470636
COUNCIL WARD All Wards
PROJECT CATEGORY Electric Utility
PROJECT LOCATION Citywide

PROJECT DESCRIPTION
Replaces aging electric distribution cable with high potential for failure in coordination with Public Works Street rehabilitation areas.

PROJECT STATUS
Ongoing replacement of underground cable prioritized based upon schedules of Public Works street projects.

OPERATING BUDGET IMPACT
Not identifiable for ongoing project.

PROJECT FUNDING OVERVIEW

Total Project Cost	Prior Years Funding *	Five Year Plan	REMAINING NEEDED
Ongoing	$0	$1,855,322	Ongoing

PROPOSED 2-YEAR BUDGET AND 5-YEAR PLAN

Fund	Funding Source	2018/19	2019/20	2020/21	2021/22	2022/23	TOTAL
510	Electric Fund	$211,562	$217,592	$331,214	$476,915	$618,039	$1,855,322
	TOTAL	**$211,562**	**$217,592**	**$331,214**	**$476,915**	**$618,039**	**$1,855,322**

* Prior Years Funding includes appropriations and adjustments to appropriations, from July 1994 to March 2018

PRIORITIZATION CATEGORIES

- ☒ Risk to Health, Safety and Environment
- ☐ Regulatory or Mandated Requirements
- ☐ Asset Condition, Annual Recurring Costs and Asset Longevity
- ☐ Community Investment and Economic Prosperity
- ☒ Level and Quality of Service
- ☐ Sustainability and Conservation
- ☐ Funding Availability
- ☐ Project Readiness
- ☒ Multiple Category Benefit and Bundling Opportunities

NEW OR EXISTING

- ☒ New Infrastructure / Facility
- ☐ Existing Infrastructure / Facility

MAJOR STREET LIGHT PROJECTS

PROJECT NUMBER	470637	**COUNCIL WARD**	All Wards
PROJECT CATEGORY	Electric Utility		
PROJECT LOCATION	Citywide		

PROJECT DESCRIPTION
Relocates and optimizes street lights for road widening projects and as a part of other projects. Project priorities are primarily driven by Public Works schedules. Also includes citywide LED street light retrofit.

PROJECT STATUS
Ongoing relocation and upgrade of street light facilities primarily driven by Public Works street projects which contributes to fulfilling our obligation to serve electric load requirements within the city service area.

OPERATING BUDGET IMPACT
Not identifiable for ongoing project.

PROJECT FUNDING OVERVIEW

Total Project Cost	Prior Years Funding *	Five Year Plan	REMAINING NEEDED
Ongoing	$23,024,970	$5,466,796	Ongoing

PROPOSED 2-YEAR BUDGET AND 5-YEAR PLAN

Fund	Funding Source	2018/19	2019/20	2020/21	2021/22	2022/23	TOTAL
510	Electric Fund	$4,266,796	$300,000	$300,000	$300,000	$300,000	$5,466,796
	TOTAL	**$4,266,796**	**$300,000**	**$300,000**	**$300,000**	**$300,000**	**$5,466,796**

* Prior Years Funding includes appropriations and adjustments to appropriations, from July 1994 to March 2018

PRIORITIZATION CATEGORIES

- ☒ Risk to Health, Safety and Environment
- ☐ Regulatory or Mandated Requirements
- ☐ Asset Condition, Annual Recurring Costs and Asset Longevity
- ☐ Community Investment and Economic Prosperity
- ☒ Level and Quality of Service
- ☐ Sustainability and Conservation
- ☐ Funding Availability
- ☐ Project Readiness
- ☒ Multiple Category Benefit and Bundling Opportunities

NEW OR EXISTING

- ☒ New Infrastructure / Facility
- ☒ Existing Infrastructure / Facility

NEIGHBORHOOD STREET LIGHT RETROFIT

PROJECT NUMBER 470638 **COUNCIL WARD** 1, 2, 3
PROJECT CATEGORY Electric Utility
PROJECT LOCATION Citywide

PROJECT DESCRIPTION
Installation of new concrete street light standards, light fixtures, and power feeds in the greater Wood Streets area. Standards and fixtures are replicas of the 90-year-old historical street light system. New fixtures are light emitting diode (LED) lights for energy efficiency.

PROJECT STATUS
Ongoing installation and modernization of street light facilities in designated areas.

OPERATING BUDGET IMPACT
Not identifiable for ongoing project.

PROJECT FUNDING OVERVIEW

Total Project Cost	Prior Years Funding *	Five Year Plan	REMAINING NEEDED
Ongoing	$7,227,191	$8,463,474	Ongoing

PROPOSED 2-YEAR BUDGET AND 5-YEAR PLAN

Fund	Funding Source	2018/19	2019/20	2020/21	2021/22	2022/23	TOTAL
510	Electric Fund	$2,690,017	$2,502,308	$1,286,812	$978,229	$1,006,108	$8,463,474
	TOTAL	$2,690,017	$2,502,308	$1,286,812	$978,229	$1,006,108	$8,463,474

* Prior Years Funding includes appropriations and adjustments to appropriations, from July 1994 to March 2018

PRIORITIZATION CATEGORIES

- ☐ Risk to Health, Safety and Environment
- ☐ Regulatory or Mandated Requirements
- ☒ Asset Condition, Annual Recurring Costs and Asset Longevity
- ☐ Community Investment and Economic Prosperity
- ☒ Level and Quality of Service
- ☐ Sustainability and Conservation
- ☐ Funding Availability
- ☐ Project Readiness
- ☒ Multiple Category Benefit and Bundling Opportunities

NEW OR EXISTING

- ☒ New Infrastructure / Facility
- ☒ Existing Infrastructure / Facility

MAJOR 4-12 KV CONVERSION

PROJECT NUMBER 470644
COUNCIL WARD All Wards
PROJECT CATEGORY Electric Utility
PROJECT LOCATION Citywide

PROJECT DESCRIPTION
Upgrades aging and obsolete lower voltage electric distribution facilities (4kV) to higher distribution voltage (12kV). Projects are located in the Magnolia and Plaza service areas. Projects are optimized to improve system capacity, and efficiency.

PROJECT STATUS
Ongoing replacement of 4kV distribution facilities prioritized based upon outage analysis as well as age and obsolescence of existing equipment.

OPERATING BUDGET IMPACT
Not identifiable for ongoing project.

PROJECT FUNDING OVERVIEW

Total Project Cost	Prior Years Funding *	Five Year Plan	REMAINING NEEDED
Ongoing	$28,454,911	$12,853,072	Ongoing

PROPOSED 2-YEAR BUDGET AND 5-YEAR PLAN

Fund	Funding Source	2018/19	2019/20	2020/21	2021/22	2022/23	TOTAL
510	Electric Fund	$2,327,927	$1,849,532	$2,339,759	$3,272,762	$3,063,092	$12,853,072
	TOTAL	**$2,327,927**	**$1,849,532**	**$2,339,759**	**$3,272,762**	**$3,063,092**	**$12,853,072**

* Prior Years Funding includes appropriations and adjustments to appropriations, from July 1994 to March 2018

PRIORITIZATION CATEGORIES

- ☐ Risk to Health, Safety and Environment
- ☐ Regulatory or Mandated Requirements
- ☒ Asset Condition, Annual Recurring Costs and Asset Longevity
- ☐ Community Investment and Economic Prosperity
- ☒ Level and Quality of Service
- ☐ Sustainability and Conservation
- ☐ Funding Availability
- ☐ Project Readiness
- ☒ Multiple Category Benefit and Bundling Opportunities

NEW OR EXISTING

- ☒ New Infrastructure / Facility
- ☐ Existing Infrastructure / Facility

DISTRIBUTION AUTOMATION

PROJECT NUMBER	470655	**COUNCIL WARD**	All Wards
PROJECT CATEGORY	Electric Utility		
PROJECT LOCATION	Citywide		

PROJECT DESCRIPTION
Provides for the design and installation of remote sensing devices and remotely controlled equipment on the Riverside electric grid. This new technology equipment remotely monitors the electric network and reports information immediately to electric control center. Remotely controlled equipment reduces personnel costs and improves response times to system disturbances.

PROJECT STATUS
Ongoing purchase and installation of equipment for remote monitoring of the electric distribution system which contributes to fulfilling our obligation to serve electric load requirements within the city service area.

OPERATING BUDGET IMPACT
Not identifiable for ongoing project.

PROJECT FUNDING OVERVIEW

Total Project Cost	Prior Years Funding *	Five Year Plan	REMAINING NEEDED
Ongoing	$2,246,550	$3,460,902	Ongoing

PROPOSED 2-YEAR BUDGET AND 5-YEAR PLAN

Fund	Funding Source	2018/19	2019/20	2020/21	2021/22	2022/23	TOTAL
510	Electric Fund	$150,000	$300,000	$300,000	$990,514	$1,720,388	$3,460,902
	TOTAL	**$150,000**	**$300,000**	**$300,000**	**$990,514**	**$1,720,388**	**$3,460,902**

* Prior Years Funding includes appropriations and adjustments to appropriations, from July 1994 to March 2018

PRIORITIZATION CATEGORIES

- ☐ Risk to Health, Safety and Environment
- ☐ Regulatory or Mandated Requirements
- ☒ Asset Condition, Annual Recurring Costs and Asset Longevity
- ☐ Community Investment and Economic Prosperity
- ☒ Level and Quality of Service
- ☐ Sustainability and Conservation
- ☐ Funding Availability
- ☐ Project Readiness
- ☒ Multiple Category Benefit and Bundling Opportunities

NEW OR EXISTING

- ☒ New Infrastructure / Facility
- ☒ Existing Infrastructure / Facility

CITYWIDE COMMUNICATIONS

PROJECT NUMBER 470664
COUNCIL WARD All Wards
PROJECT CATEGORY Electric Utility
PROJECT LOCATION Citywide

PROJECT DESCRIPTION
Provides for design and installation of fiber optic extensions between electric facilities and fiber network service points. Individual projects include additions which complement existing facilities and improve overall fiber optic system operation. Also, includes cyber-security upgrades of network equipment.

PROJECT STATUS
Ongoing installation and upgrade of communication equipment which contributes to fulfilling our obligation to serve electric load requirements within the city service area.

OPERATING BUDGET IMPACT
Not identifiable for ongoing project.

PROJECT FUNDING OVERVIEW

Total Project Cost	Prior Years Funding *	Five Year Plan	REMAINING NEEDED
Ongoing	$23,104,090	$5,752,000	Ongoing

PROPOSED 2-YEAR BUDGET AND 5-YEAR PLAN

Fund	Funding Source	2018/19	2019/20	2020/21	2021/22	2022/23	TOTAL
510	Electric Fund	$400,000	$1,338,000	$1,338,000	$1,338,000	$1,338,000	$5,752,000
	TOTAL	$400,000	$1,338,000	$1,338,000	$1,338,000	$1,338,000	$5,752,000

* Prior Years Funding includes appropriations and adjustments to appropriations, from July 1994 to March 2018

PRIORITIZATION CATEGORIES

- ☒ Risk to Health, Safety and Environment
- ☐ Regulatory or Mandated Requirements
- ☐ Asset Condition, Annual Recurring Costs and Asset Longevity
- ☐ Community Investment and Economic Prosperity
- ☒ Level and Quality of Service
- ☐ Sustainability and Conservation
- ☐ Funding Availability
- ☐ Project Readiness
- ☒ Multiple Category Benefit and Bundling Opportunities

NEW OR EXISTING

- ☒ New Infrastructure / Facility
- ☒ Existing Infrastructure / Facility

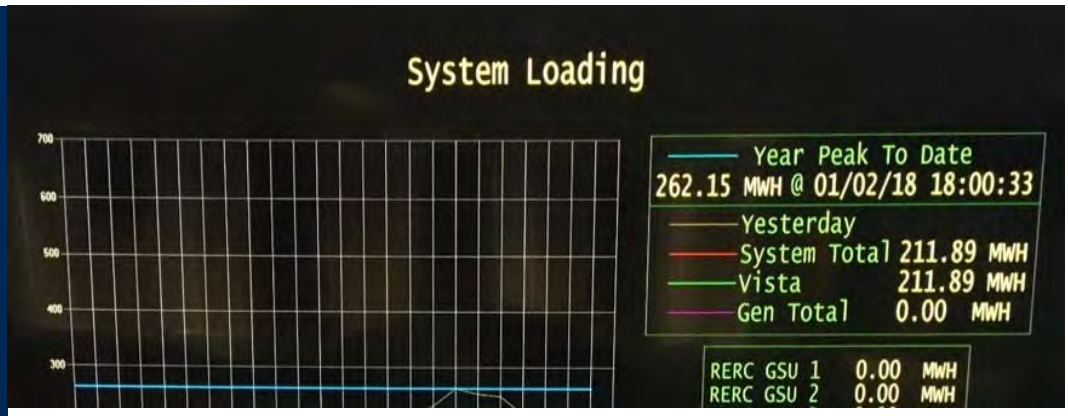

SUPERVISORY CONTROL AND DATA ACQUISITION (SCADA)

PROJECT NUMBER	470672	**COUNCIL WARD**	All Wards
PROJECT CATEGORY	Electric Utility		
PROJECT LOCATION	Citywide		

PROJECT DESCRIPTION
Provides for the necessary upgrades to the electronic system which monitors and controls operation of the electric transmission and distribution grid 24 hours a day, 365 days a year. This includes physical security upgrades required for regulatory compliance as part of system improvements. Also includes hardware and network upgrades as part of advanced technology improvements.

PROJECT STATUS
Ongoing installation and upgrade of SCADA monitoring and control equipment and technology which contributes to fulfilling our obligation to serve electric load requirements within the city service area.

OPERATING BUDGET IMPACT
Not identifiable for ongoing project.

PROJECT FUNDING OVERVIEW

Total Project Cost	Prior Years Funding *	Five Year Plan	REMAINING NEEDED
Ongoing	$9,884,288	$3,000,000	Ongoing

PROPOSED 2-YEAR BUDGET AND 5-YEAR PLAN

Fund	Funding Source	2018/19	2019/20	2020/21	2021/22	2022/23	TOTAL
510	Electric Fund	$600,000	$600,000	$600,000	$600,000	$600,000	$3,000,000
	TOTAL	**$600,000**	**$600,000**	**$600,000**	**$600,000**	**$600,000**	**$3,000,000**

* Prior Years Funding includes appropriations and adjustments to appropriations, from July 1994 to March 2018

PRIORITIZATION CATEGORIES

- ☐ Risk to Health, Safety and Environment
- ☐ Regulatory or Mandated Requirements
- ☒ Asset Condition, Annual Recurring Costs and Asset Longevity
- ☐ Community Investment and Economic Prosperity
- ☒ Level and Quality of Service
- ☐ Sustainability and Conservation
- ☐ Funding Availability
- ☐ Project Readiness
- ☒ Multiple Category Benefit and Bundling Opportunities

NEW OR EXISTING

- ☒ New Infrastructure / Facility
- ☐ Existing Infrastructure / Facility

RIVERSIDE TRANSMISSION RELIABILITY PROJECT (RTRP)

PROJECT NUMBER	470685	**COUNCIL WARD**	All Wards
PROJECT CATEGORY	Electric Utility		
PROJECT LOCATION	Citywide		

PROJECT DESCRIPTION
RTRP is a joint project with SCE to address the electrical capacity and reliability needs of the City. As part of RTRP, there was a smaller Sub-Transmission Project (STP) that was completed in 2014.

PROJECT STATUS
Award for construction of internal RERC-Harvey Lynn and RERC-Freeman 69kV line is expected in late 2018. All of this work will be located within the City of Riverside. The California Public Utilities Commission (CPUC) is currently reviewing SCE's application for a Certificate of Public Convenience and Necessity. The CPUC is expected to render a decision on SCE's application for the new 230kV interconnection in Summer 2019.

Status of SCE's application is available at http://www.cpuc.ca.gov/Environment/info/panoramaenv/RTRP/index.html.

OPERATING BUDGET IMPACT
Operating budget impact indeterminable until CPUC decision in rendered in 2019.

PROJECT FUNDING OVERVIEW

Total Project Cost	Prior Years Funding *	Five Year Plan	REMAINING NEEDED
162,756,354	$102,370,287	$0	**$60,386,067**

PROPOSED 2-YEAR BUDGET AND 5-YEAR PLAN

Fund	Funding Source	2018/19	2019/20	2020/21	2021/22	2022/23	TOTAL
		-	-	-	-	-	$0
	TOTAL	**$0**	**$0**	**$0**	**$0**	**$0**	**$0**

* Prior Years Funding includes appropriations and adjustments to appropriations, from July 1994 to March 2018

PRIORITIZATION CATEGORIES

- ☐ Risk to Health, Safety and Environment
- ☐ Regulatory or Mandated Requirements
- ☒ Asset Condition, Annual Recurring Costs and Asset Longevity
- ☐ Community Investment and Economic Prosperity
- ☒ Level and Quality of Service
- ☐ Sustainability and Conservation
- ☐ Funding Availability
- ☐ Project Readiness
- ☒ Multiple Category Benefit and Bundling Opportunities

NEW OR EXISTING

- ☒ New Infrastructure / Facility
- ☐ Existing Infrastructure / Facility

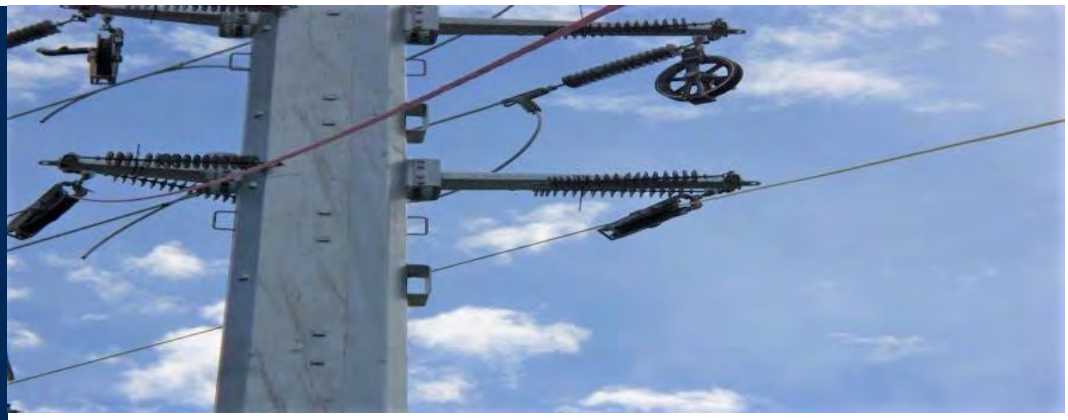

RTRP – 230kV REIMBURSABLE

PROJECT NUMBER	470686	**COUNCIL WARD**	All Wards
PROJECT CATEGORY	Electric Utility		
PROJECT LOCATION	Citywide		

PROJECT DESCRIPTION
RTRP is a joint project with SCE to address the electrical capacity and reliability needs of the City. Some portion of RTRP licensing costs may be subject to reimbursement by SCE.

PROJECT STATUS
CPUC is currently reviewing SCE's application for a certificate of Public Convenience and Necessity. The CPUC is expected to render a decision on SCE's application for the new 230kV interconnection in Summer 2019.

Status of SCE's application is available at http://www.cpuc.ca.gov/Environment/info/panoramaenv/RTRP/index.html.

OPERATING BUDGET IMPACT
Not identifiable at this time.

PROJECT FUNDING OVERVIEW

Total Project Cost	Prior Years Funding *	Five Year Plan	REMAINING NEEDED
$22,243,646	$22,243,646	$0	**$0**

PROPOSED 2-YEAR BUDGET AND 5-YEAR PLAN

Fund	Funding Source	2018/19	2019/20	2020/21	2021/22	2022/23	TOTAL
		-	-	-	-	-	$0
	TOTAL	**$0**	**$0**	**$0**	**$0**	**$0**	**$0**

* Prior Years Funding includes appropriations and adjustments to appropriations, from July 1994 to March 2018

PRIORITIZATION CATEGORIES

- ☐ Risk to Health, Safety and Environment
- ☐ Regulatory or Mandated Requirements
- ☒ Asset Condition, Annual Recurring Costs and Asset Longevity
- ☐ Community Investment and Economic Prosperity
- ☒ Level and Quality of Service
- ☐ Sustainability and Conservation
- ☐ Funding Availability
- ☐ Project Readiness
- ☒ Multiple Category Benefit and Bundling Opportunities

NEW OR EXISTING

- ☒ New Infrastructure / Facility
- ☐ Existing Infrastructure / Facility

CUSTOMER INFORMATION SYSTEM (CIS) UPGRADE

PROJECT NUMBER 470694
COUNCIL WARD All Wards
PROJECT CATEGORY Electric Utility
PROJECT LOCATION Citywide

PROJECT DESCRIPTION
Highly integrated enterprise software application integrated with other applications and serves as the single source of the department customer data.

PROJECT STATUS
Ongoing project in final stage of implementation to resolve findings from the security vulnerability assessment and to make system changes to implement the proposed rate plan by July 1, 2018.

OPERATING BUDGET IMPACT
The two-year operating budget and five-year plan include ongoing annual maintenance costs.

PROJECT FUNDING OVERVIEW

Total Project Cost	Prior Years Funding *	Five Year Plan	REMAINING NEEDED
$17,111,093	$17,111,093	$0	$0

PROPOSED 2-YEAR BUDGET AND 5-YEAR PLAN

Fund	Funding Source	2018/19	2019/20	2020/21	2021/22	2022/23	TOTAL
		-	-	-	-	-	$0
	TOTAL	$0	$0	$0	$0	$0	$0

* Prior Years Funding includes appropriations and adjustments to appropriations, from July 1994 to March 2018

PRIORITIZATION CATEGORIES

- ☐ Risk to Health, Safety and Environment
- ☐ Regulatory or Mandated Requirements
- ☒ Asset Condition, Annual Recurring Costs and Asset Longevity
- ☐ Community Investment and Economic Prosperity
- ☒ Level and Quality of Service
- ☐ Sustainability and Conservation
- ☐ Funding Availability
- ☐ Project Readiness
- ☒ Multiple Category Benefit and Bundling Opportunities

NEW OR EXISTING

- ☐ New Infrastructure / Facility
- ☒ Existing Infrastructure / Facility

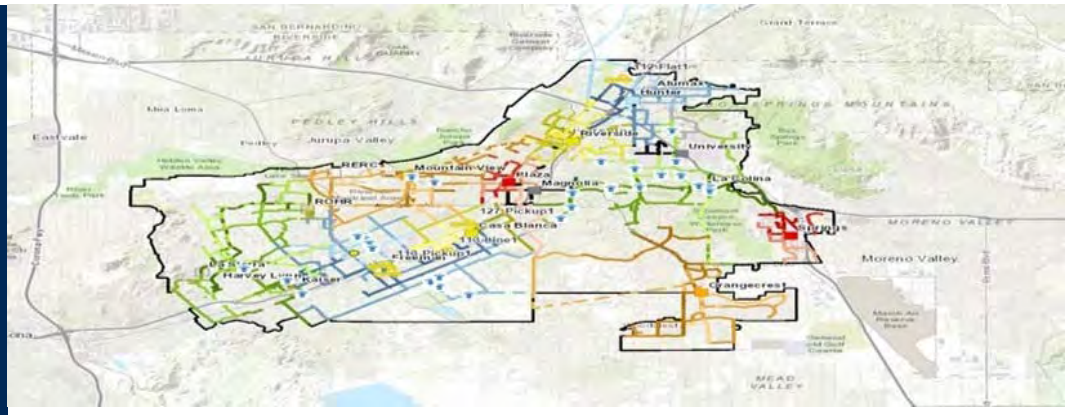

GEOGRAPHIC INFORMATION SYSTEM (GIS) UPGRADE

PROJECT NUMBER	470696	**COUNCIL WARD**	All Wards
PROJECT CATEGORY	Electric Utility		
PROJECT LOCATION	Citywide		

PROJECT DESCRIPTION
Enterprise software application that maintains the locational and physical attributes of water and electric infrastructure overlaid on geographic, political, property, and other real word features.

PROJECT STATUS
Citywide project funded by all city departments who utilize the system. 18-24 month implementation upon approval by Board and Council, estimated in June 2018.

OPERATING BUDGET IMPACT
The two-year operating budget and five-year plan include ongoing annual maintenance costs.

PROJECT FUNDING OVERVIEW

Total Project Cost	Prior Years Funding *	Five Year Plan	REMAINING NEEDED
$3,500,000	$3,500,000	$0	**$0**

PROPOSED 2-YEAR BUDGET AND 5-YEAR PLAN

Fund	Funding Source	2018/19	2019/20	2020/21	2021/22	2022/23	TOTAL
		-	-	-	-	-	$0
	TOTAL	**$0**	**$0**	**$0**	**$0**	**$0**	**$0**

* Prior Years Funding includes appropriations and adjustments to appropriations, from July 1994 to March 2018

PRIORITIZATION CATEGORIES

- ☐ Risk to Health, Safety and Environment
- ☐ Regulatory or Mandated Requirements
- ☐ Asset Condition, Annual Recurring Costs and Asset Longevity
- ☒ Community Investment and Economic Prosperity
- ☒ Level and Quality of Service
- ☐ Sustainability and Conservation
- ☐ Funding Availability
- ☐ Project Readiness
- ☒ Multiple Category Benefit and Bundling Opportunities

NEW OR EXISTING

- ☒ New Infrastructure / Facility
- ☐ Existing Infrastructure / Facility

DARK FIBER

PROJECT NUMBER 470698
COUNCIL WARD All Wards
PROJECT CATEGORY Electric Utility
PROJECT LOCATION Citywide

PROJECT DESCRIPTION
Optical fiber infrastructure for telecommunications companies, wireless operators, enterprise networks, data centers and others with critical, high capacity needs.

PROJECT STATUS
Ongoing project providing optical fiber infrastructure to various customers with critical high capacity needs.

OPERATING BUDGET IMPACT
Not identifiable for ongoing project.

PROJECT FUNDING OVERVIEW

Total Project Cost	Prior Years Funding *	Five Year Plan	REMAINING NEEDED
Ongoing	$1,200,000	$0	Ongoing

PROPOSED 2-YEAR BUDGET AND 5-YEAR PLAN

Fund	Funding Source	2018/19	2019/20	2020/21	2021/22	2022/23	TOTAL
		-	-	-	-	-	$0
	TOTAL	$0	$0	$0	$0	$0	$0

* Prior Years Funding includes appropriations and adjustments to appropriations, from July 1994 to March 2018

PRIORITIZATION CATEGORIES

- ☐ Risk to Health, Safety and Environment
- ☐ Regulatory or Mandated Requirements
- ☐ Asset Condition, Annual Recurring Costs and Asset Longevity
- ☒ Community Investment and Economic Prosperity
- ☒ Level and Quality of Service
- ☐ Sustainability and Conservation
- ☒ Funding Availability
- ☒ Project Readiness
- ☒ Multiple Category Benefit and Bundling Opportunities

NEW OR EXISTING

- ☒ New Infrastructure / Facility
- ☐ Existing Infrastructure / Facility

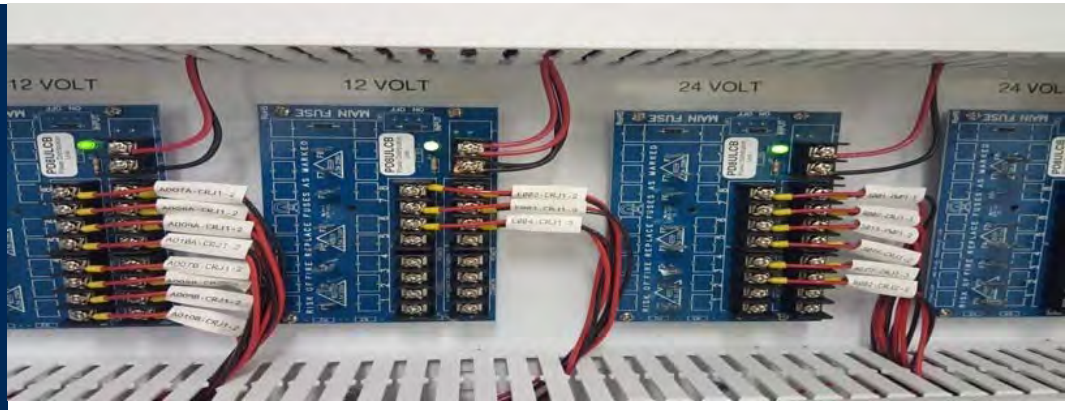

ENTERPRISE OPERATION DATA MGMT SYSTEM

PROJECT NUMBER	470822	**COUNCIL WARD**	All Wards
PROJECT CATEGORY	Electric Utility		
PROJECT LOCATION	Citywide		

PROJECT DESCRIPTION
Operation Data Management System (ODMS) receives data from electric delivery and generation system instrumentation and data communication, storage, and analysis systems. The data will support advanced monitoring and control systems to improve the operational efficiency and capability of the electric delivery systems.

PROJECT STATUS
Year 2 implementation to be completed by July 1, 2018. Cost saving from year 2 will be used for year 3 with approval by Board estimated in June 2018.

OPERATING BUDGET IMPACT
The two-year operating budget and five-year plan include ongoing annual maintenance costs.

PROJECT FUNDING OVERVIEW

Total Project Cost	Prior Years Funding *	Five Year Plan	REMAINING NEEDED
$2,599,126	$2,599,126	$0	**$0**

PROPOSED 2-YEAR BUDGET AND 5-YEAR PLAN

Fund	Funding Source	2018/19	2019/20	2020/21	2021/22	2022/23	TOTAL
510	Electric Fund	-	-	-	-	-	$0
	TOTAL	**$0**	**$0**	**$0**	**$0**	**$0**	**$0**

* Prior Years Funding includes appropriations and adjustments to appropriations, from July 1994 to March 2018

PRIORITIZATION CATEGORIES

- ☐ Risk to Health, Safety and Environment
- ☐ Regulatory or Mandated Requirements
- ☐ Asset Condition, Annual Recurring Costs and Asset Longevity
- ☒ Community Investment and Economic Prosperity
- ☒ Level and Quality of Service
- ☒ Sustainability and Conservation
- ☐ Funding Availability
- ☐ Project Readiness
- ☒ Multiple Category Benefit and Bundling Opportunities

NEW OR EXISTING

- ☒ New Infrastructure / Facility
- ☒ Existing Infrastructure / Facility

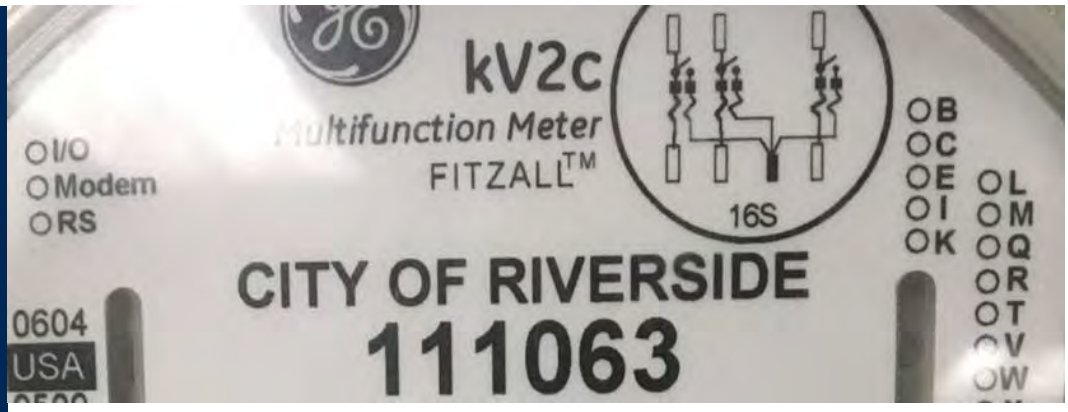

ADVANCED METERING INFRASTRUCTURE

PROJECT NUMBER	470823	**COUNCIL WARD**	All Wards
PROJECT CATEGORY	Electric Utility		
PROJECT LOCATION	Citywide		

PROJECT DESCRIPTION
Advanced Metering Infrastructure (AMI) and Meter Data Management System to integrate AMI data and support customer facing applications and web integration of Customer Integration System. Delivers automated meter reading resulting in more efficient consumption management and enhanced customer service.

PROJECT STATUS
Two-year system automation project beginning in Fiscal Year 2019/20.

OPERATING BUDGET IMPACT
The two-year operating budget and five-year plan include ongoing annual maintenance costs.

PROJECT FUNDING OVERVIEW

Total Project Cost	Prior Years Funding *	Five Year Plan	REMAINING NEEDED
$27,663,930	$790,000	$5,517,317	**$21,356,613**

PROPOSED 2-YEAR BUDGET AND 5-YEAR PLAN

Fund	Funding Source	2018/19	2019/20	2020/21	2021/22	2022/23	TOTAL
510	Electric Fund	-	$2,719,900	$2,797,417	-	-	$5,517,317
	TOTAL	**$0**	**$2,719,900**	**$2,797,417**	**$0**	**$0**	**$5,517,317**

* Prior Years Funding includes appropriations and adjustments to appropriations, from July 1994 to March 2018

PRIORITIZATION CATEGORIES

- ☐ Risk to Health, Safety and Environment
- ☐ Regulatory or Mandated Requirements
- ☐ Asset Condition, Annual Recurring Costs and Asset Longevity
- ☒ Community Investment and Economic Prosperity
- ☒ Level and Quality of Service
- ☐ Sustainability and Conservation
- ☒ Funding Availability
- ☒ Project Readiness
- ☒ Multiple Category Benefit and Bundling Opportunities

NEW OR EXISTING

- ☐ New Infrastructure / Facility
- ☐ Existing Infrastructure / Facility

OPERATIONAL TECHNOLOGY GOVERNANCE

PROJECT NUMBER	470824	**COUNCIL WARD**	All Wards
PROJECT CATEGORY	Electric Utility		
PROJECT LOCATION	Citywide		

PROJECT DESCRIPTION
Operational Technology planning, management, internal controls, and cyber and physical security improvements. Planning and Implementation of Security Risk Management Program which includes policies, tools required to monitor irregular activities on the network, and end point devices to facilitate proactive response to malicious activities or security-related performance issues.

PROJECT STATUS
Equipment and software solutions for cyber and physical security issues identified through new biannual assessments.

OPERATING BUDGET IMPACT
The two-year operating budget and five-year plan include ongoing annual maintenance costs.

PROJECT FUNDING OVERVIEW

Total Project Cost	Prior Years Funding *	Five Year Plan	REMAINING NEEDED
$1,349,296	$0	$1,349,296	**$0**

PROPOSED 2-YEAR BUDGET AND 5-YEAR PLAN

Fund	Funding Source	2018/19	2019/20	2020/21	2021/22	2022/23	TOTAL
510	Electric Fund	$220,024	$226,295	$232,746	$239,379	$430,852	$1,349,296
	TOTAL	**$220,024**	**$226,295**	**$232,746**	**$239,379**	**$430,852**	**$1,349,296**

* Prior Years Funding includes appropriations and adjustments to appropriations, from July 1994 to March 2018

PRIORITIZATION CATEGORIES

- ☐ Risk to Health, Safety and Environment
- ☐ Regulatory or Mandated Requirements
- ☐ Asset Condition, Annual Recurring Costs and Asset Longevity
- ☒ Community Investment and Economic Prosperity
- ☒ Level and Quality of Service
- ☐ Sustainability and Conservation
- ☒ Funding Availability
- ☒ Project Readiness
- ☒ Multiple Category Benefit and Bundling Opportunities

NEW OR EXISTING

- ☒ New Infrastructure / Facility
- ☐ Existing Infrastructure / Facility

WORK, ASSET, & INVENTORY MANAGEMENT SYSTEM

PROJECT NUMBER	470825	**COUNCIL WARD**	All Wards
PROJECT CATEGORY	Electric Utility		
PROJECT LOCATION	Citywide		

PROJECT DESCRIPTION
The Work, Asset and Inventory Management System (WIS) is important not only for controlling and minimizing stock materials on hand, but for its hand-off of materials through the work management system and assigning the cost of materials to assets in the asset management system. The WIS is an integral part of the workflows and information needed by the Work Management System and Asset Management System. Supports management of the Utility's field infrastructure assets (e.g. pipes, pumps, valves, connections, etc.). Includes field work-orders, asset costs and utilization.

PROJECT STATUS
Currently implementing Phase I of multi-year project.

OPERATING BUDGET IMPACT
The two-year operating budget and five-year plan include ongoing annual maintenance costs.

PROJECT FUNDING OVERVIEW

Total Project Cost	Prior Years Funding *	Five Year Plan	REMAINING NEEDED
$6,249,606	$0	$6,249,606	**$0**

PROPOSED 2-YEAR BUDGET AND 5-YEAR PLAN

Fund	Funding Source	2018/19	2019/20	2020/21	2021/22	2022/23	TOTAL
510	Electric Fund	$486,594	$652,776	$671,380	$2,071,543	$2,367,313	$6,249,606
	TOTAL	**$486,594**	**$652,776**	**$671,380**	**$2,071,543**	**$2,367,313**	**$6,249,606**

* Prior Years Funding includes appropriations and adjustments to appropriations, from July 1994 to March 2018

PRIORITIZATION CATEGORIES

- ☐ Risk to Health, Safety and Environment
- ☐ Regulatory or Mandated Requirements
- ☐ Asset Condition, Annual Recurring Costs and Asset Longevity
- ☒ Community Investment and Economic Prosperity
- ☒ Level and Quality of Service
- ☐ Sustainability and Conservation
- ☒ Funding Availability
- ☒ Project Readiness
- ☒ Multiple Category Benefit and Bundling Opportunities

NEW OR EXISTING

- ☒ New Infrastructure / Facility
- ☐ Existing Infrastructure / Facility

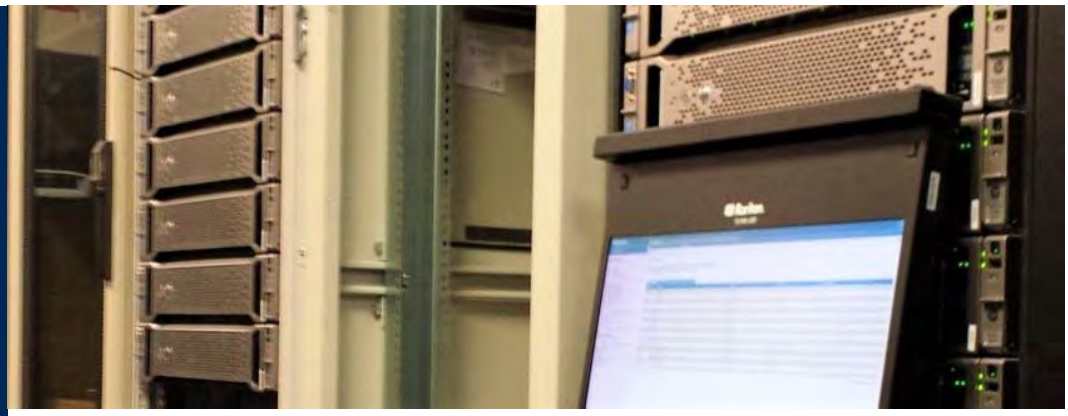

NETWORK COMMUNICATION SYSTEM

PROJECT NUMBER 470826 **COUNCIL WARD** All Wards
PROJECT CATEGORY Electric Utility
PROJECT LOCATION Citywide

PROJECT DESCRIPTION
Network Communications Systems to improve communication backbone and improve system functionality, efficiency, reliability, and cybersecurity.

PROJECT STATUS
Project to upgrade and create redundancies in the communication network.

OPERATING BUDGET IMPACT
The two-year operating budget and five-year plan include ongoing annual maintenance costs.

PROJECT FUNDING OVERVIEW

Total Project Cost	Prior Years Funding *	Five Year Plan	REMAINING NEEDED
$5,387,691	$0	$5,387,691	**$0**

PROPOSED 2-YEAR BUDGET AND 5-YEAR PLAN

Fund	Funding Source	2018/19	2019/20	2020/21	2021/22	2022/23	TOTAL
510	Electric Fund	$846,250	$1,087,960	$1,118,967	$1,150,857	$1,183,657	$5,387,691
	TOTAL	**$846,250**	**$1,087,960**	**$1,118,967**	**$1,150,857**	**$1,183,657**	**$5,387,691**

* Prior Years Funding includes appropriations and adjustments to appropriations, from July 1994 to March 2018

PRIORITIZATION CATEGORIES

- ☒ Risk to Health, Safety and Environment
- ☐ Regulatory or Mandated Requirements
- ☐ Asset Condition, Annual Recurring Costs and Asset Longevity
- ☒ Community Investment and Economic Prosperity
- ☒ Level and Quality of Service
- ☐ Sustainability and Conservation
- ☒ Funding Availability
- ☒ Project Readiness
- ☒ Multiple Category Benefit and Bundling Opportunities

NEW OR EXISTING

- ☒ New Infrastructure / Facility
- ☐ Existing Infrastructure / Facility

LAND MOBILE RADIO

PROJECT NUMBER 470827
COUNCIL WARD All Wards
PROJECT CATEGORY Electric Utility
PROJECT LOCATION Citywide

PROJECT DESCRIPTION
Land Mobile Radio (LMR) is a wireless communications system intended for use by terrestrial users in vehicles (mobiles) or on foot (portables). The new system should capitalize on digital technology known as frequency division multiple access (FDMA). The new LMR system will supply new antennas to provide citywide coverage, provide a new dispatcher console, coexist with the current analog LMR system, be based on FDMA technology, support narrow channels, enable trunked modes of operation for both analog and digital modulations, have multiple talk groups, and support private calling. It will also be Advanced Encryption and Data Encryption Standard encrypted and be capable of Over the Air Programming (OTAP).

PROJECT STATUS
Phase II to be started in FY 2021/2022.

OPERATING BUDGET IMPACT
The two-year operating budget and five-year plan include ongoing annual maintenance costs.

PROJECT FUNDING OVERVIEW

Total Project Cost	Prior Years Funding *	Five Year Plan	REMAINING NEEDED
$598,446	$0	$598,446	**$0**

PROPOSED 2-YEAR BUDGET AND 5-YEAR PLAN

Fund	Funding Source	2018/19	2019/20	2020/21	2021/22	2022/23	TOTAL
510	Electric Fund	-	-	-	$598,446	-	$598,446
	TOTAL	**$0**	**$0**	**$0**	**$598,446**	**$0**	**$598,446**

* Prior Years Funding includes appropriations and adjustments to appropriations, from July 1994 to March 2018

PRIORITIZATION CATEGORIES

- ☐ Risk to Health, Safety and Environment
- ☐ Regulatory or Mandated Requirements
- ☐ Asset Condition, Annual Recurring Costs and Asset Longevity
- ☐ Community Investment and Economic Prosperity
- ☒ Level and Quality of Service
- ☐ Sustainability and Conservation
- ☐ Funding Availability
- ☒ Project Readiness
- ☒ Multiple Category Benefit and Bundling Opportunities

NEW OR EXISTING

- ☒ New Infrastructure / Facility
- ☐ Existing Infrastructure / Facility

OUTAGE MANAGEMENT SYSTEM

PROJECT NUMBER 470829
COUNCIL WARD All Wards
PROJECT CATEGORY Electric Utility
PROJECT LOCATION Citywide

PROJECT DESCRIPTION
Reduce the time it takes to locate outages and identify outage causes.

PROJECT STATUS
Planning underway to develop project scope and schedule.

OPERATING BUDGET IMPACT
The two-year operating budget and five-year plan include ongoing annual maintenance costs.

PROJECT FUNDING OVERVIEW

Total Project Cost	Prior Years Funding *	Five Year Plan	REMAINING NEEDED
$1,658,070	$0	$1,658,070	**$0**

PROPOSED 2-YEAR BUDGET AND 5-YEAR PLAN

Fund	Funding Source	2018/19	2019/20	2020/21	2021/22	2022/23	TOTAL
510	Electric Fund	-	-	$257,362	$690,514	$710,194	$1,658,070
	TOTAL	**$0**	**$0**	**$257,362**	**$690,514**	**$710,194**	**$1,658,070**

* Prior Years Funding includes appropriations and adjustments to appropriations, from July 1994 to March 2018

PRIORITIZATION CATEGORIES

- ☐ Risk to Health, Safety and Environment
- ☐ Regulatory or Mandated Requirements
- ☐ Asset Condition, Annual Recurring Costs and Asset Longevity
- ☐ Community Investment and Economic Prosperity
- ☒ Level and Quality of Service
- ☐ Sustainability and Conservation
- ☐ Funding Availability
- ☒ Project Readiness
- ☒ Multiple Category Benefit and Bundling Opportunities

NEW OR EXISTING

- ☒ New Infrastructure / Facility
- ☐ Existing Infrastructure / Facility

ADVANCED DISTRIBUTION MANAGEMENT SYSTEM

PROJECT NUMBER	470830	**COUNCIL WARD**	All Wards
PROJECT CATEGORY	Electric Utility		
PROJECT LOCATION	Citywide		

PROJECT DESCRIPTION

Advanced Distribution Management System (ADMS) is a system of systems used to optimize the capability, efficiency, reliability and security of water and electric delivery systems. For electric delivery systems, ADMS features include voltage optimization (i.e., volt-var optimization and conservation voltage regulation/reduction), fault location, isolation, and restoration (FLISR), outage management and state estimation. ADMS is a long-term vision for Riverside Public Utilities.

PROJECT STATUS

Planning underway to develop project scope and schedule.

OPERATING BUDGET IMPACT

The two-year operating budget and five-year plan include ongoing annual maintenance costs.

PROJECT FUNDING OVERVIEW

Total Project Cost	Prior Years Funding *	Five Year Plan	REMAINING NEEDED
$2,762,784	$0	$2,762,784	**$0**

PROPOSED 2-YEAR BUDGET AND 5-YEAR PLAN

Fund	Funding Source	2018/19	2019/20	2020/21	2021/22	2022/23	TOTAL
510	Electric Fund	-	-	$895,173	$920,686	$946,925	$2,762,784
	TOTAL	**$0**	**$0**	**$895,173**	**$920,686**	**$946,925**	**$2,762,784**

* Prior Years Funding includes appropriations and adjustments to appropriations, from July 1994 to March 2018

NOTES

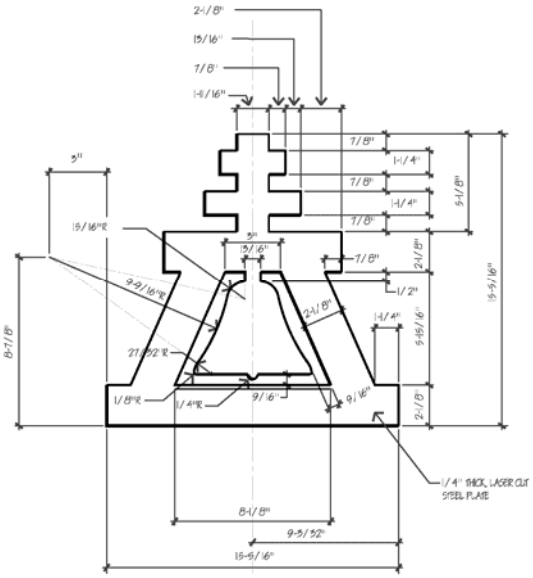
2-1/8"
15/16"
7/8"
1-11/16"
3"
15/16"R
9-9/16"R
8-7/8"
27-52"R
1/8"R
1/4"R
9/16"
9/16"
7/8"
1-1/4"
7/8"
1-1/4"
7/8"
5-1/8"
15/16"
7/8"
2-1/8"
1/2"
2-1/8"
1-1/4"
5-15/16"
2-1/8"
15-9/16"
1/4" THICK, LASER CUT STEEL PLATE
8-1/8"
9-5/32"
15-9/16"

CITY OF RIVERSIDE

CAPITAL IMPROVEMENT PROGRAM

INNOVATION AND TECHNOLOGY

NOTES

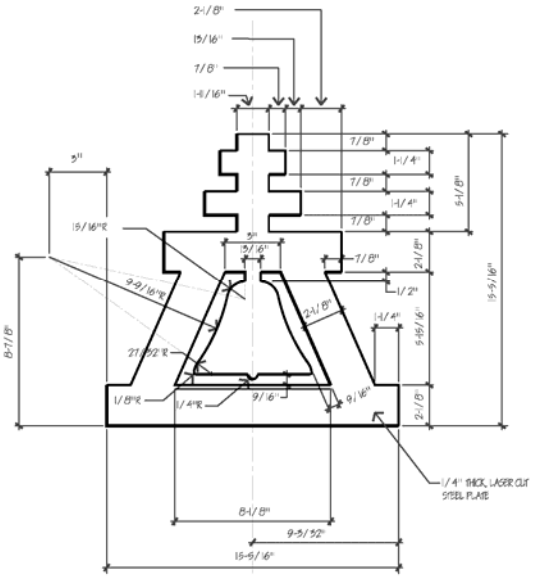
2-1/8"
15/16"
7/8"
1-11/16"
3"
15/16"R
9-9/16"R
8-7/8"
27-9/32"R
1/8"R
1/4"R
9/16"
9/16"
7/8"
1-1/4"
7/8"
1-1/4"
7/8"
5-1/8"
3"
15/16"
7/8"
2-1/8"
1/2"
2-1/8"
1-1/4"
5-15/16"
15-9/16"
2-1/8"
1/4" THICK, LASER CUT STEEL PLATE
8-1/8"
9-9/32"
15-9/16"

Project Category Overview: Innovation and Technology

Introduction

The Innovation and Technology (IT) Department is responsible for building and maintaining the City's data and telephone communications systems, three data centers, and all major enterprise software applications. Technology is ubiquitously at the core of virtually every service the City of Riverside delivers. It is enabling increased productivity, around the clock operation, faster response times, and improved relationships with residents, businesses, organizations and visitors.

IT Capital Improvement Projects implement major upgrades to these systems. Upgrades can provide new technology, which may be more reliable, faster, or address cybersecurity issues; increase capacity as data and computing needs increase exponentially; or provide new software functionalities for the public and employees.

Proposed Two-Year Budget and Five-Year Plan

During the proposed two-year budget and five-year plan the IT department plans to perform a data network replacement, major upgrade to the City's enterprise work order and asset management system, Voice over IP (VoIP) telecommunications upgrade, and major upgrade to the City's enterprise resource management system (financial and human resources system). Innovation and Technology has maintained these hardware and software assets, but several are becoming antiquated or limiting functionality for users. At this time, only the Data Network Replacement project is being funded, albeit partially, using the City's Measure Z one-cent sales tax and funds from benefiting departments. Portions of the project remain unfunded.

Data Network Replacement

This is a hardware replacement project that includes replacing critical components of the City's data network and related equipment. Much of the current equipment a decade old and unsupported by manufacturers. The City's network equipment is critical to all enterprise software systems and citywide communication, including Riverside Public Utilities, Riverside Police Department, and Riverside Fire Department.

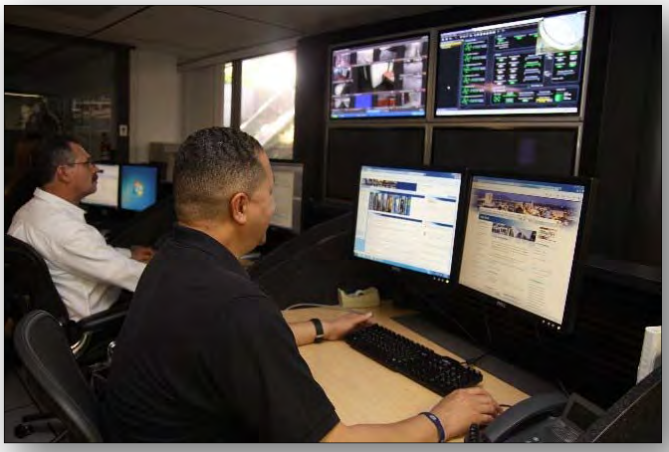

Project Category Overview: Innovation and Technology

Key Revenues and Funding Sources

Table 1: Funding Sources

Fund	Fund Description	Proposed 2018/19	Proposed 2019/20	Proposed 2020/21	Proposed 2021/22	Proposed 2022/23	Total
420	Measure Z	854,554	753,198	264,907	-	-	$1,872,659
510	Electric	266,712	235,079	82,678	-	-	$584,469
520	Water	98,807	87,088	30,629	-	-	$216,524
530	Airport	4,672	4,118	1,449	-	-	$10,239
540	Refuse	36,551	32,216	11,331	-	-	$80,098
550	Sewer	66,761	58,843	20,696	-	-	$146,300
640	Central Stores	5,341	4,707	1,656	-	-	$11,704
650	Central Garage	22,699	20,007	7,036	-	-	$49,742
	TOTAL	**$1,356,097**	**$1,195,256**	**$420,382**	**$0**	**$0**	**$2,971,735**

The City's Measure Z one-cent sales tax is the key funding source for the Innovation and Technology Department's funded Capital Improvement Project. Most IT Measure Z Technology Improvements have a Citywide benefit, including benefitting all of the non-General Fund Departments. In order to provide these technology improvements to non-General Funds, there will be a cost sharing methodology and amount developed for each of the Technology Improvement projects. Currently, the projects are estimated to receive 40% of project costs from non-General Fund departments. As project plans and costs are further refined, a specific cost sharing methodology will be applied based on the unique cost drivers of each project and will be equitable to both the General Fund and non-General Funds.

Projects by Major Type of Improvement

Table 2: Schedule of Projects by Major Type of Improvement

Project Type/Project Name	Proposed 2018/19	Proposed 2019/20	Proposed 2020/21	Proposed 2021/22	Proposed 2022/23	Total
Equipment						
Data Network Replacement	1,356,097	1,195,256	420,382	-	-	$2,971,735
TOTAL	**$1,356,097**	**$1,195,256**	**$420,382**	**$0**	**$0**	**$2,971,735**

Project Category Overview: Innovation and Technology

Unfunded Projects

Table 3: Top Unfunded Projects by Priority

Project Name	Estimated Project Cost	Unfunded Amount
1. Work-Order/Asset Management System Major Upgrade	3,234,900	3,234,900
2. Datacenter Capital Improvements	2,046,000	2,046,000
3. Data Network Replacement	4,800,000	1,828,265
4. Voice Over IP (VoIP) Telecommunications System Upgrades	965,000	965,000
5. Voice Over IP (VoIP) Telecommunications System - Full Replacement	2,400,000	2,400,000
6. Enterprise Resource Planning System Replacement	18,000,000	18,000,000
TOTAL	**$31,445,900**	**$28,474,165**

Innovation and Technology identified six unfunded capital projects with no funding.

Project Category Overview: Innovation and Technology

Project Map

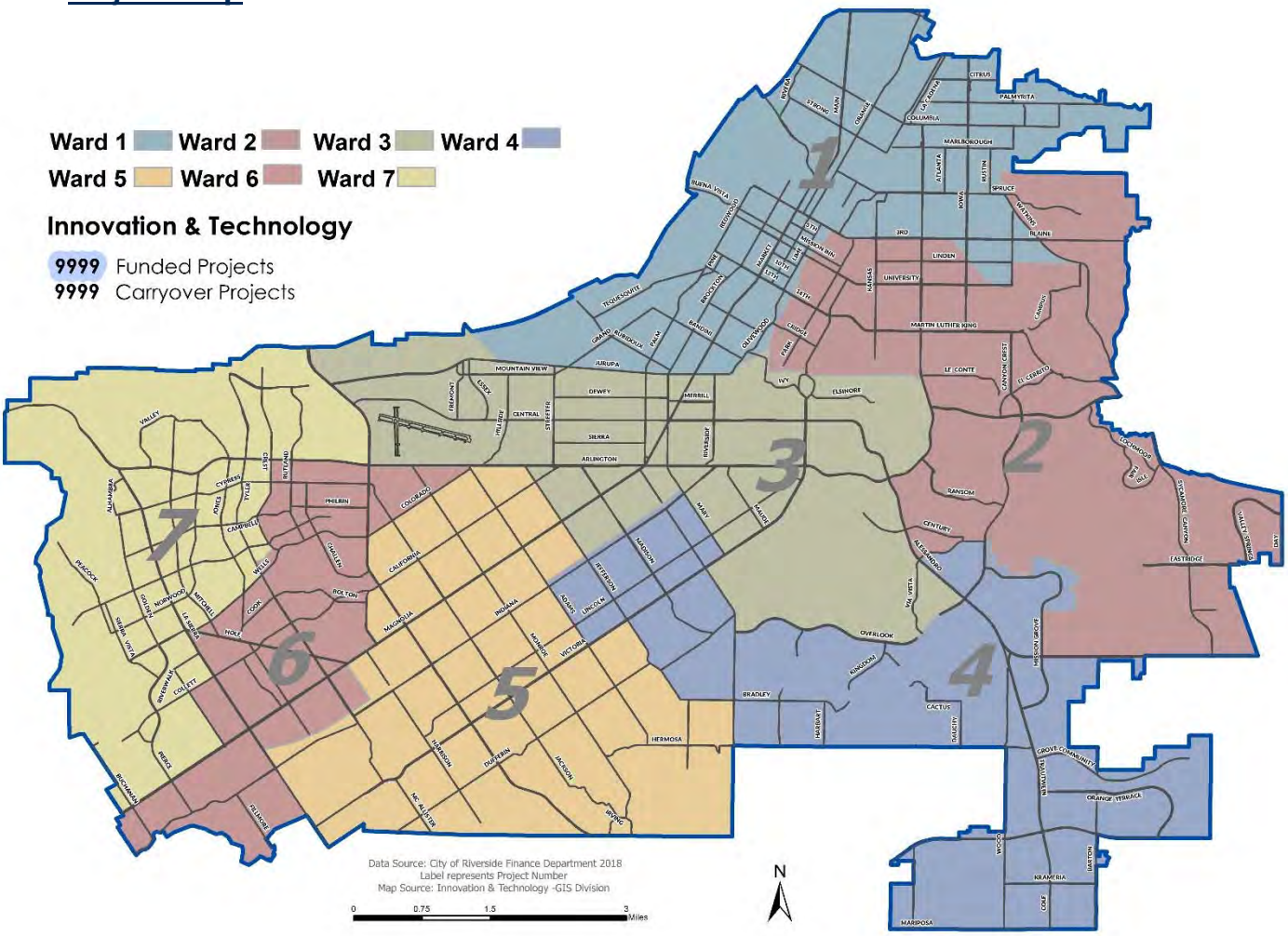

Note: This map includes all active and new capital improvement projects. Ongoing and citywide projects are not included on the map. To view additional information and detailed maps, please visit the City's website at https://riverside.openbook.questica.com.

Graph 1: Distribution by Ward

Ward	Five-Year Total
Ward 1	-
Ward 2	-
Ward 3	-
Ward 4	-
Ward 5	-
Ward 6	-
Ward 7	-
All Wards	$2,971,735
Total	**$2,971,735**

PRIORITIZATION CATEGORIES

- ☐ Risk to Health, Safety and Environment
- ☐ Regulatory or Mandated Requirements
- ☒ Asset Condition, Annual Recurring Costs and Asset Longevity
- ☐ Community Investment and Economic Prosperity
- ☒ Level and Quality of Service
- ☐ Sustainability and Conservation
- ☐ Funding Availability
- ☐ Project Readiness
- ☒ Multiple Category Benefit and Bundling Opportunities

NEW OR EXISTING

- ☐ New Infrastructure / Facility
- ☒ Existing Infrastructure / Facility

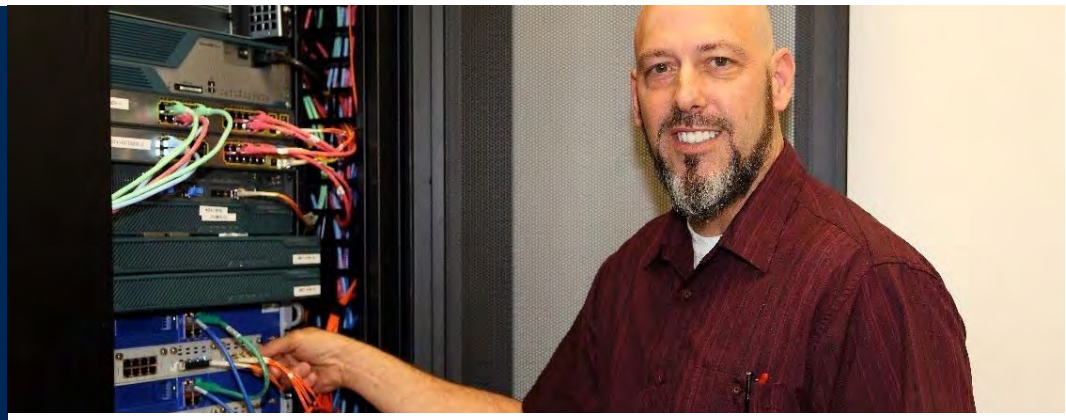

DATA NETWORK REPLACEMENT

PROJECT NUMBER 9022 **COUNCIL WARD** All Wards
PROJECT CATEGORY Innovation and Technology
PROJECT LOCATION Various

PROJECT DESCRIPTION
This is a hardware replacement project that includes replacing critical components of the City's data network and related equipment. Much of the equipment is a decade old and out of manufacturer support, which prevents Innovation and Technology from performing routine maintenance and therefore presents cybersecurity and failure risks. The City's network equipment is critical to all enterprise software systems and communication Citywide, including Riverside Public Utilities and public safety.

PROJECT STATUS
Request For Proposal (RFP) for Consulting Services for Network Refresh is currently published. It provides for network requirements, design, and development of an RFP for the Network Refresh. The Network Refresh RFP is expected to publish fall 2018.

OPERATING BUDGET IMPACT
The project will introduce annually recurring operations and maintenance costs starting at $265,800 annually. These costs will be incurred for hardware maintenance and support contracts for the new network equipment. Costs are funded by Measure Z through Fiscal Year 2020/21.

PROJECT FUNDING OVERVIEW

Total Project Cost	Prior Years Funding	Five Year Plan	REMAINING NEEDED
$4,800,000	$0	$2,971,735	**$1,828,265**

PROPOSED 2-YEAR BUDGET AND 5-YEAR PLAN

Fund	Funding Source	2018/19	2019/20	2020/21	2021/22	2022/23	TOTAL
420	Measure Z – Capital Projects	$854,553	$753,198	$264,908	-	-	$1,872,659
510	Electric	266,712	235,079	82,678	-	-	584,469
520	Water	98,807	87,088	30,629	-	-	216,524
530	Airport	4,672	4,118	1,449	-	-	10,239
540	Refuse	36,551	32,216	11,331	-	-	80,089
550	Sewer	66,761	58,843	20,696	-	-	146,300
640	Central Stores	5,341	4,707	1,656	-	-	11,704
650	Central Garage	22,699	20,007	7,036	-	-	49,742
	TOTAL	**$1,356,097**	**$1,195,256**	**$420,382**	**$0**	**$0**	**$2,971,735**

NOTES

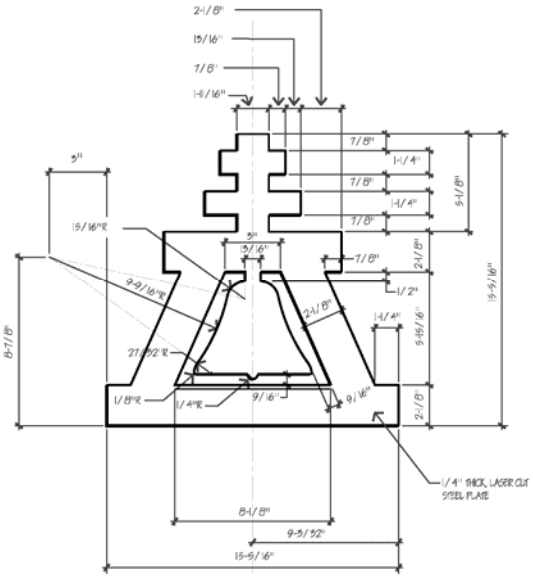
2-1/8"
15/16"
7/8"
1-11/16"
3"
15/16"R
9-9/16"R
8-7/8"
27-52"R
1/8"R
1/4"R
9/16"
9/16"
7/8"
1-1/4"
7/8"
1-1/4"
7/8"
5-1/8"
15/16"
7/8"
2-1/8"
1/2"
2-1/8"
1-1/4"
5-15/16"
2-1/8"
15-9/16"
1/4" THICK, LASER CUT STEEL PLATE
8-1/8"
9-5/32"
15-9/16"

CITY OF RIVERSIDE

CAPITAL IMPROVEMENT PROGRAM

MUNICIPAL BUILDINGS AND FACILITIES

NOTES

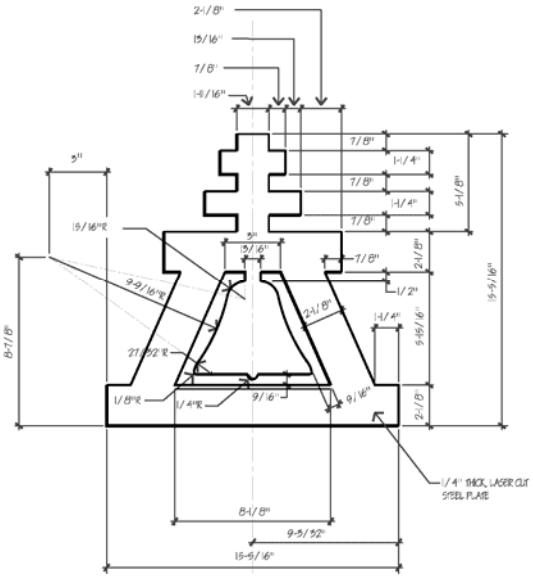
2-1/8"
15/16"
7/8"
1-11/16"
3"
15/16"R
9-9/16"R
8-7/8"
27-52"R
1/8"R
1/4"R
9/16"
9/16"
7/8"
1-1/4"
7/8"
1-1/4"
7/8"
5-1/8"
15/16"
7/8"
2-1/8"
1/2"
2-1/8"
1-1/4"
5-15/16"
15-9/16"
2-1/8"
1/4" THICK, LASER CUT STEEL PLATE
8-1/8"
9-5/32"
15-9/16"

Project Category Overview: Municipal Buildings and Facilities

Introduction

The General Services Department provides safe, clean, well-maintained, and functional facilities for the City. Additionally, the department is responsible for maintaining the City's green vehicle fleet, as well as managing the City's alternative fuel infrastructure and fueling stations.

The core functions of the Municipal Buildings and Facilities are to manage the design and construction of new facilities, such as alternative fueling stations, libraries, police and fire Stations, and oversee major rehabilitation of existing buildings such as the Riverside Convention Center, Fox Theater, and Municipal Auditorium.

Proposed Two-Year Budget and Five-Year Plan

General Services maintains approximately 125 buildings or approximately 1.8 million square feet. While the Airport Division is part of the General Services Department, the Airport is responsible for its own Capital Improvement Program (CIP).Riverside Public Utilities and Parks, Recreation and Community Services Departments prepare CIPs for their facilities and are not part of the General Services CIP.

While this CIP plan is intended to achieve our goal of providing a safe and comfortable experience for our residents, visitors, and City employees, this list is not a complete project inventory. A facilities condition assessment is underway as of March 2018. The project goal is to develop a comprehensive understanding of the conditions of core City facilities, develop a list of critical CIP needs, and create a preventative maintenance program.

Project Highlights:

Downtown Library

The new Downtown library will be a three-story, 42,000 square feet, innovative and master planned space that will connect with existing developments in the area. Funding for the first two years will pay for design and construction. The new facility will replace the outdated library on Mission Inn. It will include more community meeting spaces, archives, new programs, creative workspaces,

Project Category Overview: Municipal Buildings and Facilities

and expanded children's services. It will also create a catalyst for future positive economic activity in Downtown Riverside.

Police Headquarters

The new Police Headquarters is a proposed 10-acre campus located at the corner of Main Street and Columbia Avenue. Funding for the first two years will pay for the project design, environmental analysis and partial construction costs.

Metropolitan Museum Rehabilitation

The renovation will bring the Museum into the twenty-first century and provide visitors with a modern museum experience in which to learn about the cultural and natural history of Riverside and its region. Funding for the first two years will pay for the project design. Full funding has not been identified to complete the project.

Key Revenues and Funding Sources

Table 1: Funding Sources

Fund	Funding Source	Proposed 2018/19	Proposed 2019/20	Proposed 2020/21	Proposed 2021/22	Proposed 2022/23	Total
420	Measure Z Capital	2,000,000	1,000,000	1,000,000	1,000,000	1,000,000	$6,000,000
650	Central Garage	100,000	-	-	-	-	$100,000
	TOTAL	**$2,100,000**	**$1,000,000**	**$1,000,000**	**$1,000,000**	**$1,000,000**	**$6,100,000**

Funding for the non-fleet Municipal Buildings and Facilities CIP comes primarily from the General Fund and Measure Z. While grant funding is limited for facility projects, General Service's staff continually seeks grant funding when possible. Fleet facility improvements identified in this CIP are funded through service rates charged to city departments, grants, and alternative fuel revenues from the public sale of compressed natural gas, hydrogen, and propane fuel.

It is difficult to develop an accurate CIP because sources of revenue for the General Fund are subject to change based on citywide

Project Category Overview: Municipal Buildings and Facilities

needs. Additionally, grant funded projects are subject to Federal, State, and other agencies awards.

Projects by Major Type of Improvement

Table 2: Schedule of Projects by Major Type of Improvement

Project Type/Project Name	Proposed 2018/19	Proposed 2019/20	Proposed 2020/21	Proposed 2021/22	Proposed 2022/23	Total
Buildings						
Downtown Library (Non-Bond)	1,000,000	-	-	-	-	$1,000,000
Total Buildings	**$1,000,000**	**$0**	**$0**	**$0**	**$0**	**$1,000,000**
Other Projects						
City Buildings Deferred Maintenance	1,000,000	1,000,000	1,000,000	1,000,000	1,000,000	$5,000,000
Ethanol (E85) Fueling Station	100,000	-	-	-	-	$100,000
Total Other Projects	**$1,100,000**	**$1,000,000**	**$1,000,000**	**$1,000,000**	**$1,000,000**	**$5,100,000**
TOTAL	**$2,100,000**	**$1,000,000**	**$1,000,000**	**$1,000,000**	**$1,000,000**	**$6,100,000**

Unfunded Projects

Table 3: Top Ten Unfunded Projects by Priority

Project Name	Estimated Project Cost	Unfunded Amount
1. Eastside Library - New Construction	15,000,000	15,000,000
2. Corporation Yard Parking Lot Repaving - Phase III	1,200,000	1,200,000
3. Harada House - Emergency Structural Repairs	250,000	250,000
4. Harada House Structural Upgrade	40,000	40,000
5. EOC Data Ctr Sprinkler Removal/Sec Impr	480,000	480,000
6. Police Department Aviation Fuel Tank Replacement	220,000	220,000
7. City Hall Fan/HVAC	100,000	100,000
8. Fire Station 11 Gender Modifications	750,000	750,000
9. Convention Center Cooling Tower Replacement	57,000	57,000
10. Ethanol (E85) Fueling Station	750,000	510,000
TOTAL	**$18,847,000**	**$18,607,000**

Project Category Overview: Municipal Buildings and Facilities

Project Map

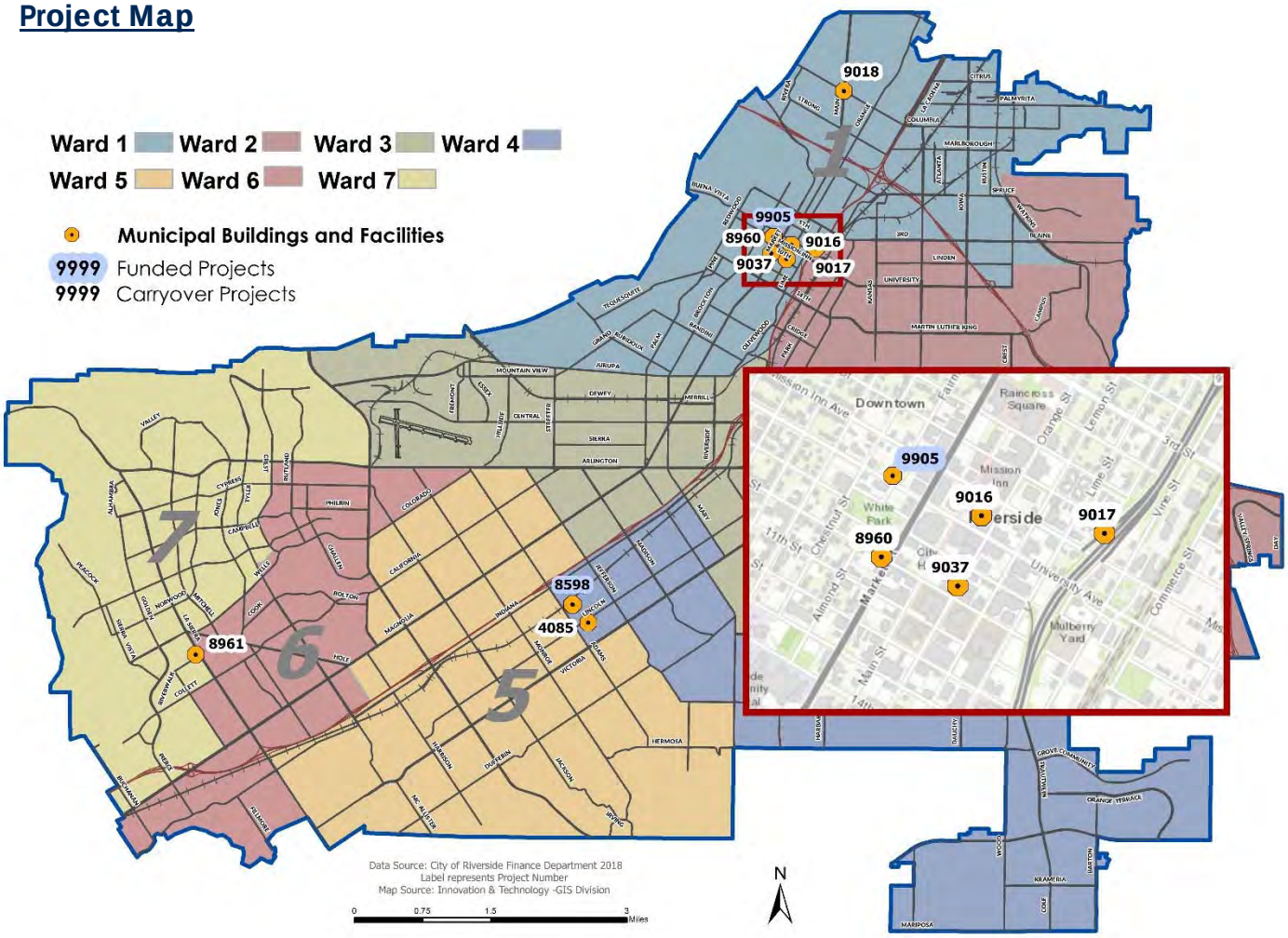

Note: This map includes all active and new capital improvement projects. On-going and citywide projects are not included on the map. To view additional information and detailed maps, please visit the City's website at https://riverside.openbook.questica.com.

Graph 1: Distribution by Ward

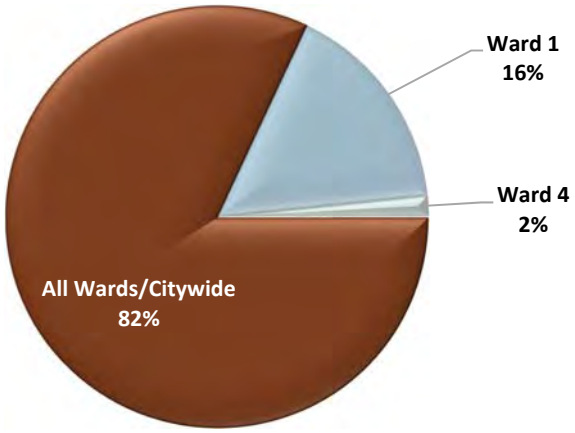

Ward	Five-Year Total
Ward 1	1,000,000
Ward 2	-
Ward 3	-
Ward 4	100,000
Ward 5	-
Ward 6	-
Ward 7	-
All Wards	5,000,000
Total	**$6,100,000**

PRIORITIZATION CATEGORIES

- ☒ Risk to Health, Safety and Environment
- ☒ Regulatory or Mandated Requirements
- ☐ Asset Condition, Annual Recurring Costs and Asset Longevity
- ☐ Community Investment and Economic Prosperity
- ☐ Level and Quality of Service
- ☐ Sustainability and Conservation
- ☒ Funding Availability
- ☒ Project Readiness
- ☒ Multiple Category Benefit and Bundling Opportunities

NEW OR EXISTING

- ☐ New Infrastructure / Facility
- ☒ Existing Infrastructure / Facility

FLEET METHANE DETECTION SYSTEM

PROJECT NUMBER 4085 **COUNCIL WARD** 3
PROJECT CATEGORY Municipal Buildings and Facilities
PROJECT LOCATION City Corporation Yard, 8095 Lincoln Avenue

PROJECT DESCRIPTION
This project will add methane detection system expanding the shop capacity for compressed natural gas (CNG) maintenance work. The project also improves lighting conditions in the Fleet Service Garage. This project was modified in Fiscal Year 2017/18 to include the methane gas detection system.

PROJECT STATUS
Pending approval from Planning Department for system designs.

OPERATING BUDGET IMPACT
Minor ongoing maintenance cost.

PROJECT FUNDING OVERVIEW

Total Project Cost	Prior Years Funding	Five Year Plan	REMAINING NEEDED
$685,000	$685,000	$0	$0

PROPOSED 2-YEAR BUDGET AND 5-YEAR PLAN

Fund	Funding Source	2018/19	2019/20	2020/21	2021/22	2022/23	TOTAL
		-	-	-	-	-	$0
	TOTAL	$0	$0	$0	$0	$0	$0

PRIORITIZATION CATEGORIES

- ☐ Risk to Health, Safety and Environment
- ☐ Regulatory or Mandated Requirements
- ☐ Asset Condition, Annual Recurring Costs and Asset Longevity
- ☐ Community Investment and Economic Prosperity
- ☐ Level and Quality of Service
- ☐ Sustainability and Conservation
- ☐ Funding Availability
- ☒ Project Readiness
- ☐ Multiple Category Benefit and Bundling Opportunities

NEW OR EXISTING

- ☒ New Infrastructure / Facility
- ☐ Existing Infrastructure / Facility

ETHANOL (E85) FUELING STATION

PROJECT NUMBER 8598 **COUNCIL WARD** 4
PROJECT CATEGORY Municipal Buildings and Facilities
PROJECT LOCATION City Corporation Yard, 8095 Lincoln Avenue

PROJECT DESCRIPTION
The original ethanol fueling station project expanded to install a new light duty fuel island with two unleaded one-hose dispensers, one CNG two-hose dispenser, one E-85 two-hose dispensers, and one card reader. The project also proposes installation of a canopy at the new light duty fuel island, the addition of a new propane two-hose dispenser, two new CNG two-hose dispensers at the existing fuel island, relocation of two unleaded dispensers to Lincoln Police Station with a new card reader, and new unleaded tank for fueling.

PROJECT STATUS
Project was on hold. Project scoping now in progress with a target ground breaking near the end 2018 or early 2019.

OPERATING BUDGET IMPACT
Minor ongoing maintenance costs; potentially offset by CNG and propane fuel sales revenue.

PROJECT FUNDING OVERVIEW

Total Project Cost	Prior Years Funding	Five Year Plan	REMAINING NEEDED
$750,000	$240,000	$100,000	**$510,000**

PROPOSED 2-YEAR BUDGET AND 5-YEAR PLAN

Fund	Funding Source	2018/19	2019/20	2020/21	2021/22	2022/23	TOTAL
650	Central Garage	$100,000	-	-	-	-	$100,000
	TOTAL	**$100,000**	**$0**	**$0**	**$0**	**$0**	**$100,000**

PRIORITIZATION CATEGORIES

- ☒ Risk to Health, Safety and Environment
- ☐ Regulatory or Mandated Requirements
- ☐ Asset Condition, Annual Recurring Costs and Asset Longevity
- ☐ Community Investment and Economic Prosperity
- ☐ Level and Quality of Service
- ☐ Sustainability and Conservation
- ☒ Funding Availability
- ☒ Project Readiness
- ☒ Multiple Category Benefit and Bundling Opportunities

NEW OR EXISTING

- ☒ New Infrastructure / Facility
- ☐ Existing Infrastructure / Facility

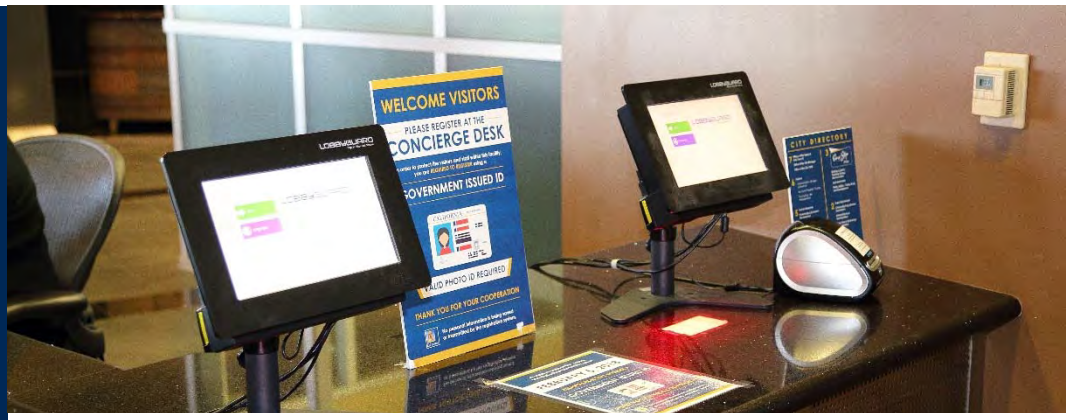

SECURITY IMPROVEMENTS

PROJECT NUMBER 8960 **COUNCIL WARD** 1
PROJECT CATEGORY Municipal Buildings and Facilities
PROJECT LOCATION City Hall, 3900 Main Street

PROJECT DESCRIPTION
Miscellaneous security upgrades at City Hall to include, but not limited to, card readers, controllers, cameras, signage, and new storefront doors at each floor exiting balcony.

PROJECT STATUS
Projects to increase security are continually being assessed by departments.

OPERATING BUDGET IMPACT
There may be additional ongoing costs if the security projects require software subscriptions. Most items will require little, if any, ongoing maintenance costs.

PROJECT FUNDING OVERVIEW

Total Project Cost	Prior Years Funding	Five Year Plan	REMAINING NEEDED
Ongoing	$167,000	$0	Ongoing

PROPOSED 2-YEAR BUDGET AND 5-YEAR PLAN

Fund	Funding Source	2018/19	2019/20	2020/21	2021/22	2022/23	TOTAL
		-	-	-	-	-	$0
	TOTAL	$0	$0	$0	$0	$0	$0

PRIORITIZATION CATEGORIES

- ☒ Risk to Health, Safety and Environment
- ☐ Regulatory or Mandated Requirements
- ☒ Asset Condition, Annual Recurring Costs and Asset Longevity
- ☐ Community Investment and Economic Prosperity
- ☒ Level and Quality of Service
- ☐ Sustainability and Conservation
- ☒ Funding Availability
- ☒ Project Readiness
- ☒ Multiple Category Benefit and Bundling Opportunities

NEW OR EXISTING

- ☐ New Infrastructure / Facility
- ☒ Existing Infrastructure / Facility

LA SIERRA LIBRARY AIR HANDLER AND HEATING UNITS

PROJECT NUMBER 8961 **COUNCIL WARD** 7
PROJECT CATEGORY Municipal Buildings and Facilities
PROJECT LOCATION La Sierra Library, 4600 La Sierra Avenue

PROJECT DESCRIPTION
Replace air handler and heating units.

PROJECT STATUS
Currently in the design phase.

OPERATING BUDGET IMPACT
Should be a reduction due to a decrease in maintenance needs.

PROJECT FUNDING OVERVIEW

Total Project Cost	Prior Years Funding	Five Year Plan	REMAINING NEEDED
$50,000	$50,000	$0	**$0**

PROPOSED 2-YEAR BUDGET AND 5-YEAR PLAN

Fund	Funding Source	2018/19	2019/20	2020/21	2021/22	2022/23	TOTAL
		-	-	-	-	-	$0
	TOTAL	**$0**	**$0**	**$0**	**$0**	**$0**	**$0**

PRIORITIZATION CATEGORIES

- ☒ Risk to Health, Safety and Environment
- ☐ Regulatory or Mandated Requirements
- ☒ Asset Condition, Annual Recurring Costs and Asset Longevity
- ☐ Community Investment and Economic Prosperity
- ☐ Level and Quality of Service
- ☐ Sustainability and Conservation
- ☒ Funding Availability
- ☐ Project Readiness
- ☒ Multiple Category Benefit and Bundling Opportunities

NEW OR EXISTING

- ☐ New Infrastructure / Facility
- ☒ Existing Infrastructure / Facility

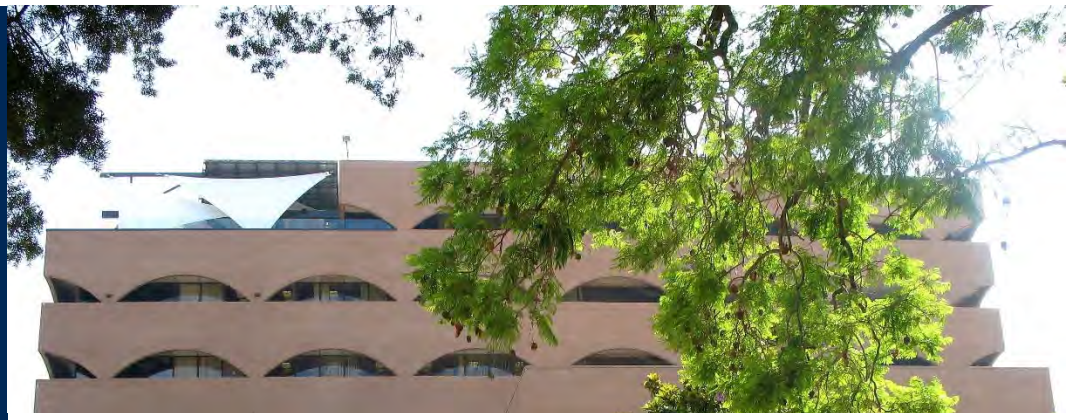

FACILITY ROOF REPAIRS

PROJECT NUMBER 8962 **COUNCIL WARD** All Wards
PROJECT CATEGORY Municipal Buildings and Facilities
PROJECT LOCATION Citywide

PROJECT DESCRIPTION
Roofs can develop small cracks over time due to weather and other factors. Small leaks can turn into larger problems, such as rotten framing, mold, ceiling damage, and interior water damage. Repairing small problems prevent larger more costly repairs.

PROJECT STATUS
Ongoing maintenance project used year-round to repair leaking or damaged roofs. Funds will be utilized as problems are identified throughout the year.

OPERATING BUDGET IMPACT
There are no additional operating costs as a result of this project.

PROJECT FUNDING OVERVIEW

Total Project Cost	Prior Years Funding	Five Year Plan	REMAINING NEEDED
Ongoing	$50,000	$0	Ongoing

PROPOSED 2-YEAR BUDGET AND 5-YEAR PLAN

Fund	Funding Source	2018/19	2019/20	2020/21	2021/22	2022/23	TOTAL
		-	-	-	-	-	$0
	TOTAL	$0	$0	$0	$0	$0	$0

PRIORITIZATION CATEGORIES

- ☐ Risk to Health, Safety and Environment
- ☐ Regulatory or Mandated Requirements
- ☐ Asset Condition, Annual Recurring Costs and Asset Longevity
- ☒ Community Investment and Economic Prosperity
- ☐ Level and Quality of Service
- ☐ Sustainability and Conservation
- ☐ Funding Availability
- ☐ Project Readiness
- ☐ Multiple Category Benefit and Bundling Opportunities

NEW OR EXISTING

- ☐ New Infrastructure / Facility
- ☒ Existing Infrastructure / Facility

CHEECH MARIN CENTER FOR CHICANO ART

PROJECT NUMBER 9016 **COUNCIL WARD** 1
PROJECT CATEGORY Municipal Buildings and Facilities
PROJECT LOCATION 3581 Mission Inn Avenue

PROJECT DESCRIPTION
Reuse and repurpose the existing Downtown library as the new Cheech Marin Center for Chicano Art. The facility will be a modern, innovative, active and accessible arts center offering a variety of public services including galleries, a café, administrative offices, classrooms, and gift store. The Cheech Marin Center for Chicano Art will hold an art collection of approximately 700 pieces of paintings and sculptures.

PROJECT STATUS
Phase One of the project is underway and includes the development of conceptual designs for use in private fundraising efforts. Following completion of conceptual designs, the City will enter into Phase Two of design services which will be 100% funded with private fundraising. City funds will not be used for Phase Two services.

OPERATING BUDGET IMPACT
Ongoing maintenance will be funded through a privately established foundation.

PROJECT FUNDING OVERVIEW

Total Project Cost	Prior Years Funding	Five Year Plan	REMAINING NEEDED
$10,000,000	$0	$1,000,000	**$9,000,000**

PROPOSED 2-YEAR BUDGET AND 5-YEAR PLAN

Fund	Funding Source	2018/19	2019/20	2020/21	2021/22	2022/23	TOTAL
*215**	*Grants and Special Programs*	*$1,000,000*	*-*	*-*	*-*	*-*	*$1,000,000*
	TOTAL	**$1,000,000**	**$0**	**$0**	**$0**	**$0**	**$1,000,000**

**Appropriation of funds contingent on grant award. For planning purposes only. Not included in in other areas of the CIP.*

PRIORITIZATION CATEGORIES

- ☐ Risk to Health, Safety and Environment
- ☐ Regulatory or Mandated Requirements
- ☒ Asset Condition, Annual Recurring Costs and Asset Longevity
- ☒ Community Investment and Economic Prosperity
- ☐ Level and Quality of Service
- ☐ Sustainability and Conservation
- ☒ Funding Availability
- ☐ Project Readiness
- ☒ Multiple Category Benefit and Bundling Opportunities

NEW OR EXISTING

- ☐ New Infrastructure / Facility
- ☒ Existing Infrastructure / Facility

METRO MUSEUM EXPANSION AND REHABILITATION

PROJECT NUMBER 9017 **COUNCIL WARD** 1
PROJECT CATEGORY Municipal Buildings and Facilities
PROJECT LOCATION 3580 Mission Inn Avenue

PROJECT DESCRIPTION
The Riverside Metropolitan Museum building was built between 1912 and 1914 as a United States Post Office and federal building. It later served as the home of the Riverside Police Department with the Museum housed in its basement. Between 1962 and 1965 the Museum was remodeled into its current configuration, expanding to fill the entire building in 1966. Significant renovations have been done since that time. The renovation will bring the Museum into the twenty-first century and provide visitors with a modern museum experience to learn about the cultural and natural history of Riverside and the region.

PROJECT STATUS
Project is in the early planning stages.

OPERATING BUDGET IMPACT
Ongoing maintenance after the expansion and rehab will likely be lower than the existing facility.

PROJECT FUNDING OVERVIEW

Total Project Cost	Prior Years Funding	Five Year Plan	REMAINING NEEDED
$13,700,000	$0	$13,700,000	**$0**

PROPOSED 2-YEAR BUDGET AND 5-YEAR PLAN

Fund	Funding Source	2018/19	2019/20	2020/21	2021/22	2022/23	TOTAL
*420**	*Measure Z (Bond Proceeds)*	-	*$1,500,000*	*$12,200,000*	-	-	*$13,700,000*
	TOTAL	**$0**	**$1,500,000**	**$12,200,000**	**$0**	**$0**	**$13,700,000**

**Appropriation of funds contingent on bond issuance. For planning purposes only. Not included in in other areas of the CIP.*

PRIORITIZATION CATEGORIES

- ☒ Risk to Health, Safety and Environment
- ☐ Regulatory or Mandated Requirements
- ☐ Asset Condition, Annual Recurring Costs and Asset Longevity
- ☐ Community Investment and Economic Prosperity
- ☒ Level and Quality of Service
- ☐ Sustainability and Conservation
- ☐ Funding Availability
- ☐ Project Readiness
- ☒ Multiple Category Benefit and Bundling Opportunities

NEW OR EXISTING

- ☒ New Infrastructure / Facility
- ☐ Existing Infrastructure / Facility

POLICE HEADQUARTERS

PROJECT NUMBER	9018	**COUNCIL WARD**	1
PROJECT CATEGORY	Municipal Buildings and Facilities		
PROJECT LOCATION	Main Street and Columbia Avenue		

PROJECT DESCRIPTION

The proposed new Police Headquarters will be a ten-acre campus located on the corner of Main Street and Columbia Avenue. The proposed project would develop a 50,000 square foot state-of-the-art facility that is designed to meet the administrative needs of the Riverside Police Department. The design would be adaptive to meet future needs. Additionally, the campus will be designed to accommodate a police station, 10,000 square foot community center, future Emergency Operations Center expansion, joint police and fire training facility, physical agility training center, and secured parking for special operational equipment.

PROJECT STATUS

Project is in the planning stages.

OPERATING BUDGET IMPACT

There will be ongoing maintenance associated with the new building; however, maintenance costs will be significantly lower than the existing building.

PROJECT FUNDING OVERVIEW

Total Project Cost	Prior Years Funding	Five Year Plan	REMAINING NEEDED
$35,000,000	$0	$35,000,000	**$0**

PROPOSED 2-YEAR BUDGET AND 5-YEAR PLAN

Fund	Funding Source	2018/19	2019/20	2020/21	2021/22	2022/23	TOTAL
*420**	*Measure Z (Bond Proceeds)*	*$2,000,000*	*$33,000,000*	-	-	-	*$35,000,000*
	TOTAL	**$2,000,000**	**$33,000,000**	**$0**	**$0**	**$0**	**$35,000,000**

**Appropriation of funds contingent on bond issuance. For planning purposes only. Not included in in other areas of the CIP.*

PRIORITIZATION CATEGORIES

- ☒ Risk to Health, Safety and Environment
- ☐ Regulatory or Mandated Requirements
- ☒ Asset Condition, Annual Recurring Costs and Asset Longevity
- ☐ Community Investment and Economic Prosperity
- ☐ Level and Quality of Service
- ☐ Sustainability and Conservation
- ☒ Funding Availability
- ☒ Project Readiness
- ☒ Multiple Category Benefit and Bundling Opportunities

NEW OR EXISTING

- ☐ New Infrastructure / Facility
- ☒ Existing Infrastructure / Facility

CITY BUILDINGS DEFERRED MAINTENANCE

PROJECT NUMBER 9019 **COUNCIL WARD** All
PROJECT CATEGORY Municipal Buildings and Facilities
PROJECT LOCATION Citywide

PROJECT DESCRIPTION
Maintains the City's existing core government facilities, such as libraries, fire and police stations, Museum, and City Hall. Projects include minor capital work that is needed to bring the facilities to a safe and acceptable condition such as roof replacements and repairs, HVAC system replacements, parking lot overlays and rehabilitation, room remodels, floor replacements, etc.

PROJECT STATUS
Staff continues to identify and prioritize facility needs. Multiple projects are completed each year.

OPERATING BUDGET IMPACT
There should be a slight decrease to the operating budget as the majority of the projects will replace old and aging items that require a high degree of maintenance and repair.

PROJECT FUNDING OVERVIEW

Total Project Cost	Prior Years Funding	Five Year Plan	REMAINING NEEDED
Ongoing	$0	$5,000,000	Ongoing

PROPOSED 2-YEAR BUDGET AND 5-YEAR PLAN

Fund	Funding Source	2018/19	2019/20	2020/21	2021/22	2022/23	TOTAL
420	Measure Z Capital Projects	$1,000,000	$1,000,000	$1,000,000	$1,000,000	$1,000,000	$5,000,000
	TOTAL	$1,000,000	$1,000,000	$1,000,000	$1,000,000	$1,000,000	$5,000,000

PRIORITIZATION CATEGORIES

- ☐ Risk to Health, Safety and Environment
- ☐ Regulatory or Mandated Requirements
- ☒ Asset Condition, Annual Recurring Costs and Asset Longevity
- ☐ Community Investment and Economic Prosperity
- ☒ Level and Quality of Service
- ☐ Sustainability and Conservation
- ☐ Funding Availability
- ☐ Project Readiness
- ☒ Multiple Category Benefit and Bundling Opportunities

NEW OR EXISTING

- ☒ New Infrastructure / Facility
- ☒ Existing Infrastructure / Facility

DOWNTOWN PARKING GARAGE

PROJECT NUMBER 9037 **COUNCIL WARD** 1
PROJECT CATEGORY Municipal Buildings and Facilities
PROJECT LOCATION To Be Determined

PROJECT DESCRIPTION
Multi-level parking structure with approximately 500 parking spaces at $30,000 per space, including land acquisition (location TBD).

PROJECT STATUS
The project is still in a preliminary concept phase.

OPERATING BUDGET IMPACT
Additional utility and janitorial costs are anticipated upon completion of the parking garage.

PROJECT FUNDING OVERVIEW

Total Project Cost	Prior Years Funding	Five Year Plan	REMAINING NEEDED
$15,000,000	$0	$15,000,000	**$0**

PROPOSED 2-YEAR BUDGET AND 5-YEAR PLAN

Fund	Funding Source	2018/19	2019/20	2020/21	2021/22	2022/23	TOTAL
*420**	*Measure Z (Bond Proceeds)*	-	-	*$1,500,000*	*$13,500,000*	-	*$15,000,000*
	TOTAL	**$0**	**$0**	**$1,500,000**	**$13,500,000**	**$0**	**$15,000,000**

**Appropriation of funds contingent on bond issuance. For planning purposes only. Not included in in other areas of the CIP.*

PRIORITIZATION CATEGORIES

- ☐ Risk to Health, Safety and Environment
- ☐ Regulatory or Mandated Requirements
- ☐ Asset Condition, Annual Recurring Costs and Asset Longevity
- ☒ Community Investment and Economic Prosperity
- ☒ Level and Quality of Service
- ☐ Sustainability and Conservation
- ☐ Funding Availability
- ☐ Project Readiness
- ☒ Multiple Category Benefit and Bundling Opportunities

NEW OR EXISTING

- ☒ New Infrastructure / Facility
- ☐ Existing Infrastructure / Facility

DOWNTOWN LIBRARY

PROJECT NUMBER 9905 **COUNCIL WARD** 1
PROJECT CATEGORY Municipal Buildings and Facilities
PROJECT LOCATION 3911 University Avenue

PROJECT DESCRIPTION
The new innovative and master planned Downtown Library will be a three-story, 42,000 square foot facility that will connect with existing developments in the area to maximize visibility and use. The new facility will replace the outdated Library on Mission Inn Avenue. It will create additional community meeting space, new historic programs, creative workspaces, and expanded children's services. This library will also be a catalyst for future positive economic activity in Downtown Riverside.

PROJECT STATUS
The project is in the early design phase. Construction anticipated to begin in 2019.

OPERATING BUDGET IMPACT
Ongoing maintenance will likely be lower than the existing facility.

PROJECT FUNDING OVERVIEW

Total Project Cost	Prior Years Funding	Five Year Plan	REMAINING NEEDED
$42,992,600	$2,197,230	$40,795,370	$0

PROPOSED 2-YEAR BUDGET AND 5-YEAR PLAN

Fund	Funding Source	2018/19	2019/20	2020/21	2021/22	2022/23	TOTAL
420	Measure Z Capital Projects	$1,000,000	-	-	-	-	$1,000,000
*420**	*Measure Z (Bond Proceeds)*	*39,795,370*	-	-	-	-	*39,795,370*
	TOTAL	**$40,795,370**	**$0**	**$0**	**$0**	**$0**	**$40,795,370**

**Appropriation of funds contingent on bond issuance. For planning purposes only. Not included in in other areas of the CIP.*

NOTES

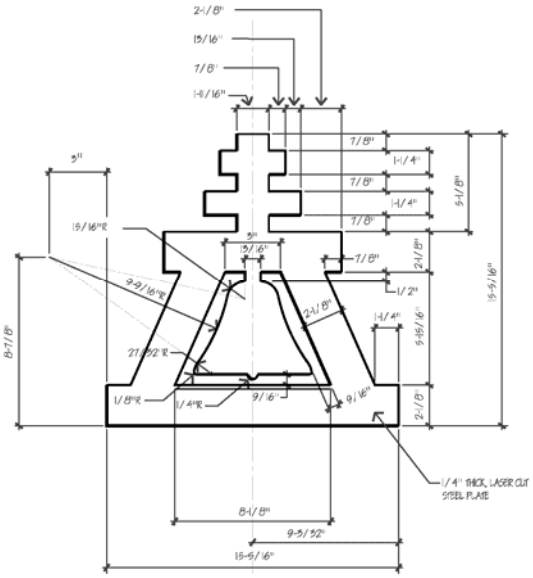
2-1/8"
15/16"
7/8"
1-11/16"
3"
15/16"R
9-9/16"R
27-9/32"R
1/8"R
1/4"R
9/16"
9/16"
7/8"
1-1/4"
7/8"
1-1/4"
7/8"
5-1/8"
15/16"
7/8"
2-1/8"
1/2"
2-1/8"
1-1/4"
5-15/16"
2-1/8"
15-5/16"
8-7/8"
1/4" THICK, LASER CUT STEEL PLATE
8-1/8"
9-5/32"
15-5/16"

CITY OF RIVERSIDE

CAPITAL IMPROVEMENT PROGRAM

PARKS, RECREATION AND COMMUNITY SERVICES

NOTES

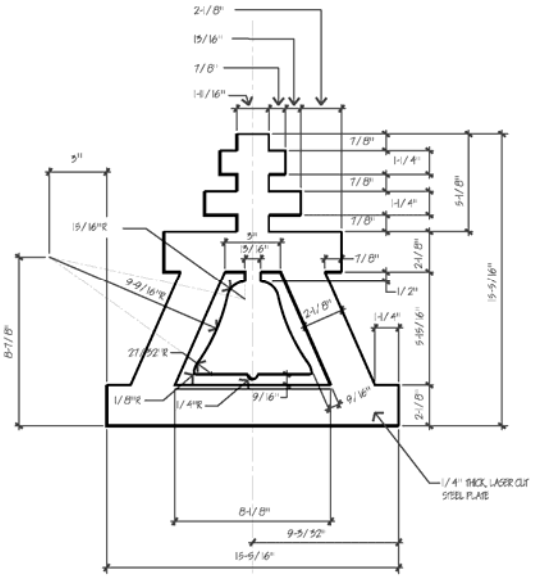
2-1/8"
15/16"
7/8"
1-11/16"
3"
15/16"R
9-9/16"R
8-7/8"
27-9/32"R
1/8"R
1/4"R
9/16"
9/16"
7/8"
1-1/4"
7/8"
1-1/4"
7/8"
5-1/8"
15/16"
7/8"
2-1/8"
1/2"
2-1/8"
1-1/4"
5-15/16"
15-9/16"
2-1/8"
1/4" THICK, LASER CUT STEEL PLATE
8-1/8"
9-5/32"
15-9/16"

Project Category Overview: Parks, Recreation, and Community Services

Introduction

The Parks, Recreation and Community Services Department is responsible for providing innovative recreational experiences and social enrichment opportunities to address the changing needs for people of all ages and cultures, in a variety of safe and attractive parks, trails, landscapes, and facilities. One of the Department's main responsibilities is to plan, design, and construct new parks and facilities, as well as renovate and enhance existing amenities.

Proposed Two-Year Budget and Five-Year Plan

The Parks, Recreation and Community Services Department will be working on several previously funded projects. The most significant project planned in the next five years is the construction of a new youth innovation center.

Project Highlights:

Arlington Youth Innovation Center (AYIC)

The AYIC is envisioned to offer programs and services oriented toward technology education and job skills development to better serve the youth in the community. Based on 2010 census data, the City's population of residents between the ages of 0 to 24 makes up the largest segment by age group with the range of 18 to 24 representing 15.5%. In the Arlington Neighborhood, the 10 to 19 age group makes up 17.8% of the population. The design phase of this project is in progress. Construction will commence in summer 2018.

Project Category Overview: Parks, Recreation, and Community Services

Key Revenues and Funding Sources

Table 1: Funding Sources

Fund	Funding Source	Proposed 2018/19	Proposed 2019/20	Proposed 2020/21	Proposed 2021/22	Proposed 2022/23	Total
		-	-	-	-	-	$0
	TOTAL	**$0**	**$0**	**$0**	**$0**	**$0**	**$0**

Major revenue sources that the Parks, Recreation and Community Services Department typically uses to fund CIP projects include, Federal and State Grants, Successor Agency Funds/Redevelopment Bond Funds, Development Impact Fees, and Local and Regional Park Funds. These are restricted funding sources and one-time funding sources.

Projects by Major Type of Improvement

Table 2: Schedule of Projects by Major Type of Improvement

Project Type/Project Name	Proposed 2018/19	Proposed 2019/20	Proposed 2020/21	Proposed 2021/22	Proposed 2022/23	Total
	-	-	-	-	-	$0
TOTAL	**$0**	**$0**	**$0**	**$0**	**$0**	**$0**

No new projects are funded in the five-year plan. The department will be executing several previously funded projects including construction of new youth center for which funding is already identified and will be allocated as part of a separate Council action.

Unfunded Projects

Table 3: Top Ten Unfunded Projects by Priority

Project Name	Estimated Project Cost	Unfunded Amount
1. Villegas Park Wading Pool Replacement	450,000	450,000
2. Islander Park Wading Pool Replacement	375,000	375,000
3. Shamel Park Wading Pool Replacement	425,000	425,000
4. Low Park And Parent Navel Lot	650,000	650,000
5. Fairmount Park - Golf Course Netting Along Freeway	300,000	300,000
6. Fairmount Park - Golf Course Net/Post Along Field Lane	204,077	204,077
7. Bergamont Park - Playground Shade Sails	85,000	85,000
8. Hunter Park - Playground Shade	75,000	75,000
9. Taft Park – Playground Shade	95,000	95,000
10. La Sierra Park - La Sierra Community Center HVAC	51,500	51,500
TOTAL	**$2,710,577**	**$2,710,577**

Project Category Overview: Parks, Recreation, and Community Services

Project Map

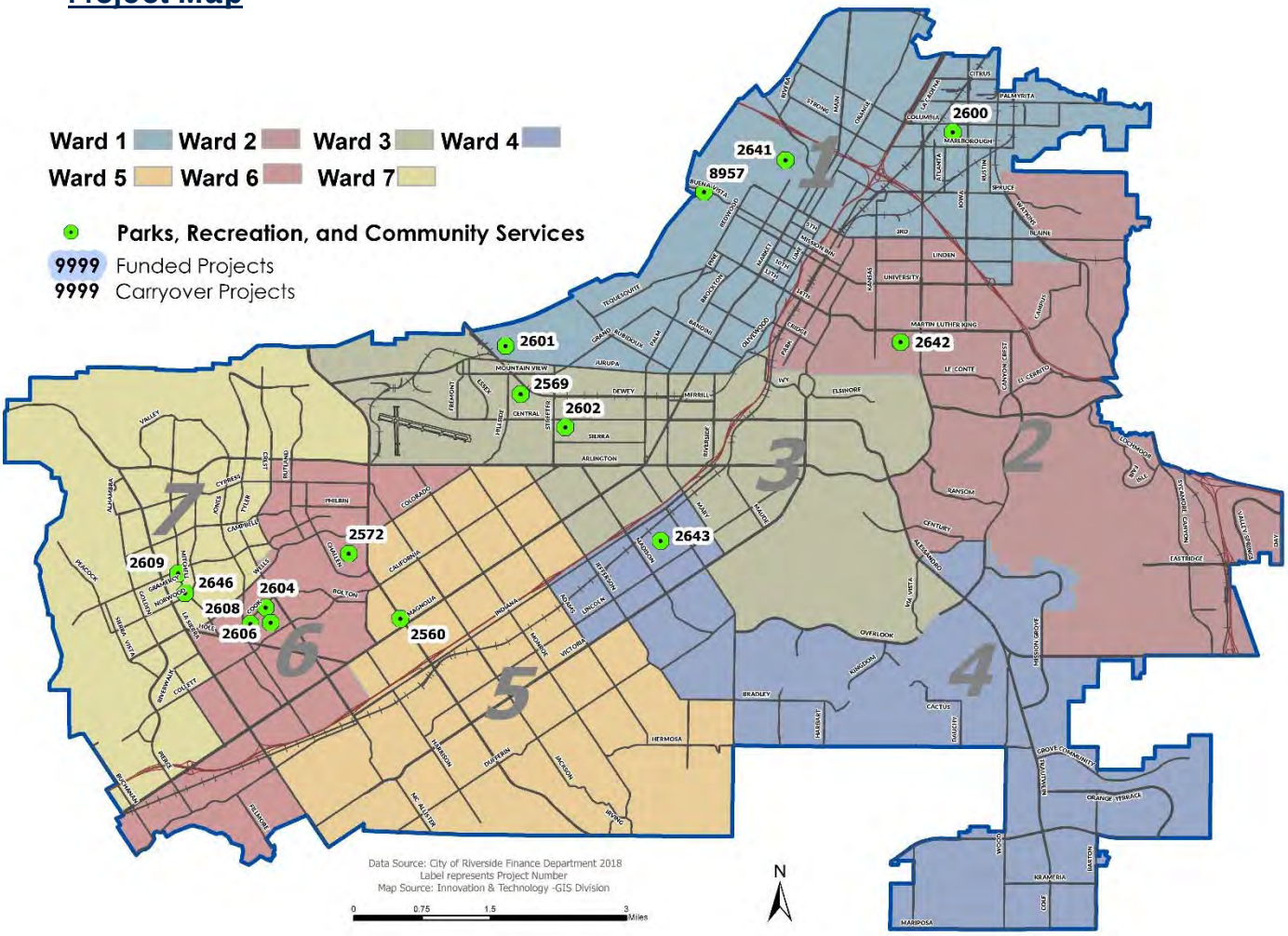

Note: This map includes all active and new capital improvement projects. Ongoing and citywide projects are not included on the map. To view additional information and detailed maps, please visit the City's website at https://riverside.openbook.questica.com.

Graph 1: Distribution by Ward

No new projects are funded in the five-year plan.

Ward	Five-Year Total
Ward 1	-
Ward 2	-
Ward 3	-
Ward 4	-
Ward 5	-
Ward 6	-
Ward 7	-
All Wards	-
Total	**$0**

NOTES

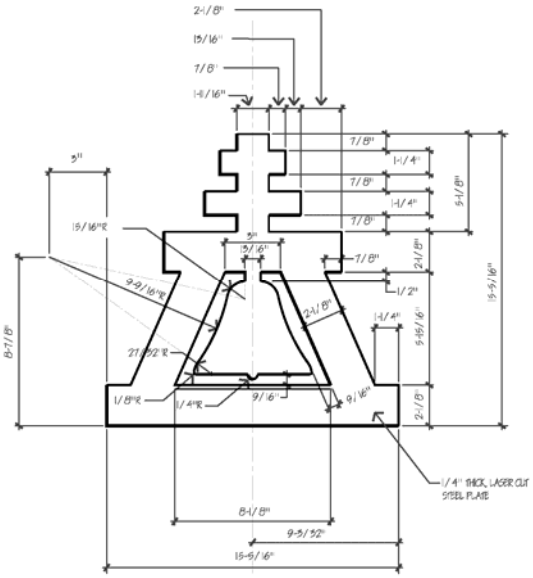
2-1/8"
15/16"
7/8"
1-11/16"
3"
15/16"R
9-9/16"R
27-9/32"R
1/8"R
1/4"R
9/16"
9/16"
7/8"
1-1/4"
7/8"
1-1/4"
7/8"
5-1/8"
15/16"
7/8"
2-1/8"
1/2"
2-1/8"
1-1/4"
5-15/16"
2-1/8"
15-5/16"
8-7/8"
1/4" THICK, LASER CUT STEEL PLATE
8-1/8"
9-5/32"
15-5/16"

PRIORITIZATION CATEGORIES

- ☐ Risk to Health, Safety and Environment
- ☐ Regulatory or Mandated Requirements
- ☐ Asset Condition, Annual Recurring Costs and Asset Longevity
- ☒ Community Investment and Economic Prosperity
- ☒ Level and Quality of Service
- ☐ Sustainability and Conservation
- ☒ Funding Availability
- ☒ Project Readiness
- ☒ Multiple Category Benefit and Bundling Opportunities

NEW OR EXISTING

- ☒ New Infrastructure / Facility
- ☐ Existing Infrastructure / Facility

ARLINGTON YOUTH INNOVATION CENTER

PROJECT NUMBER 2560 **COUNCIL WARD** 5
PROJECT CATEGORY Parks, Recreation, and Community Services
PROJECT LOCATION Arlington Park, 3860 Van Buren Boulevard

PROJECT DESCRIPTION
Design and construction of a new10,000 square feet Youth Innovation Center (AYIC). The project will include classrooms, computer lab, multi-purpose rooms, recording studio, new parking lot, and an outdoor amphitheater. The AYIC is envisioned to offer a broad range of work skills and educational assistance programs as the Johnny Martin Sotelo Youth Opportunity Center (YOC) in the Eastside Neighborhood. The AYIC will focus on innovation, technology, and multi-media to complement the arts-focused programs at the existing YOC.

PROJECT STATUS
Design phase is complete. Construction bid documents have been posted. Anticipate award construction contract summer 2018.

OPERATING BUDGET IMPACT
Estimate $250,000 additional on-going funds needed to operate and maintain facility. On-going needs include approximately 3.0 full-time equivalent personnel to program and operate the facility as well as non-personnel (supplies, copy machine, utilities, janitorial, etc.).

PROJECT FUNDING OVERVIEW

Total Project Cost	Prior Years Funding	Five Year Plan	REMAINING NEEDED
$6,500,000	$350,000	$0	**$6,150,000**

PROPOSED 2-YEAR BUDGET AND 5-YEAR PLAN

Fund	Funding Source	2018/19	2019/20	2020/21	2021/22	2022/23	TOTAL
		-	-	-	-	-	$0
	TOTAL	$0	$0	$0	$0	$0	$0

PRIORITIZATION CATEGORIES

- ☐ Risk to Health, Safety and Environment
- ☐ Regulatory or Mandated Requirements
- ☒ Asset Condition, Annual Recurring Costs and Asset Longevity
- ☒ Community Investment and Economic Prosperity
- ☒ Level and Quality of Service
- ☐ Sustainability and Conservation
- ☐ Funding Availability
- ☐ Project Readiness
- ☒ Multiple Category Benefit and Bundling Opportunities

NEW OR EXISTING

- ☐ New Infrastructure / Facility
- ☒ Existing Infrastructure / Facility

NICHOLS COMMUNITY CENTER RENOVATION

PROJECT NUMBER 2569 **COUNCIL WARD** 3
PROJECT CATEGORY Parks, Recreation, and Community Services
PROJECT LOCATION Nichols Park, 5505 Dewey Avenue

PROJECT DESCRIPTION
Master Plan Design and construction for the Joyce Jackson Community Center. Design phase will include issuing an RFP and procuring architectural services for a Community Center Master Plan. The Master Plan will entail a complete renovation of the existing 10,000 square feet facility and expansion of the programmable space by approximately 6,000 square feet. The Master Plan Design will also include a redesign of the landscape architectural design services for redesigning the exterior spaces to make the building more welcoming and functional.

The master plan documents will be used to apply for grants or other funding opportunities to complete the construction documents and ultimately construct the future $5 million dollar improvement.

PROJECT STATUS
In Progress - Draft Request for Proposal (RFP) for consultant for master plan/conceptual design. Construction documents and contract are currently unfunded.

OPERATING BUDGET IMPACT
Minor increase in operating cost for maintenance due to additional square footage is estimated to be in the range of $5,000 to $10,000 annually based on current janitorial rates.

PROJECT FUNDING OVERVIEW

Total Project Cost	Prior Years Funding	Five Year Plan	REMAINING NEEDED
$5,000,000	$120,000	$0	**$4,880,000**

PROPOSED 2-YEAR BUDGET AND 5-YEAR PLAN

Fund	Funding Source	2018/19	2019/20	2020/21	2021/22	2022/23	TOTAL
		-	-	-	-	-	$0
	TOTAL	$0	$0	$0	$0	$0	$0

PRIORITIZATION CATEGORIES

- ☐ Risk to Health, Safety and Environment
- ☐ Regulatory or Mandated Requirements
- ☐ Asset Condition, Annual Recurring Costs and Asset Longevity
- ☒ Community Investment and Economic Prosperity
- ☒ Level and Quality of Service
- ☐ Sustainability and Conservation
- ☒ Funding Availability
- ☒ Project Readiness
- ☒ Multiple Category Benefit and Bundling Opportunities

NEW OR EXISTING

- ☐ New Infrastructure / Facility
- ☒ Existing Infrastructure / Facility

EL DORADO PARK WALKING PATH

PROJECT NUMBER 2572 **COUNCIL WARD** 6
PROJECT CATEGORY Parks, Recreation, and Community Services
PROJECT LOCATION El Dorado Park

PROJECT DESCRIPTION
Design and construction of decomposed granite walking/jogging path from Warren Sreet to Temecula Street (Phase Onel) including demolition of existing turf, minor grading of site, concrete mowcurbs, new landscape, irrigation modifications, and other associated work.

PROJECT STATUS
Masterplan Concept has been developed, approval by City Council is anticipated in summer 2018, bid documents will be prepared thereafter followed by construction.

OPERATING BUDGET IMPACT
No operating impact. Existing site is currently landscaped with turf and is being maintained and watered. Installation of a decomposed granite walking path is not anticipated to be more costly to maintain.

PROJECT FUNDING OVERVIEW

Total Project Cost	Prior Years Funding	Five Year Plan	REMAINING NEEDED
$90,000	$90,000	$0	$0

PROPOSED 2-YEAR BUDGET AND 5-YEAR PLAN

Fund	Funding Source	2018/19	2019/20	2020/21	2021/22	2022/23	TOTAL
		-	-	-	-	-	$0
	TOTAL	$0	$0	$0	$0	$0	$0

PRIORITIZATION CATEGORIES

- ☐ Risk to Health, Safety and Environment
- ☐ Regulatory or Mandated Requirements
- ☐ Asset Condition, Annual Recurring Costs and Asset Longevity
- ☒ Community Investment and Economic Prosperity
- ☒ Level and Quality of Service
- ☐ Sustainability and Conservation
- ☒ Funding Availability
- ☒ Project Readiness
- ☒ Multiple Category Benefit and Bundling Opportunities

NEW OR EXISTING

- ☐ New Infrastructure / Facility
- ☒ Existing Infrastructure / Facility

HUNTER PARK - RAILROAD KIOSK

PROJECT NUMBER 2600 **COUNCIL WARD** 1
PROJECT CATEGORY Parks, Recreation, and Community Services
PROJECT LOCATION Hunter Park, 1401 Iowa Avenue

PROJECT DESCRIPTION
Design and construction of Hunter Park Railroad Kiosk includes design, demolition, landscaping, irrigation, paving, and construction of interpretive signage that will provide historical background information about unique miniature steam train railroad feature at Hunter Park.

PROJECT STATUS
Staff engaged with Riverside Live Steamers who are working on developing kiosk information. Preliminary conceptual signage has been prepared. Bid documents anticipated to be prepared and released winter 2018/19 and construction anticipated summer 2019.

OPERATING BUDGET IMPACT
No impact to operating budget.

PROJECT FUNDING OVERVIEW

Total Project Cost	Prior Years Funding	Five Year Plan	REMAINING NEEDED
$68,000	$68,000	$0	$0

PROPOSED 2-YEAR BUDGET AND 5-YEAR PLAN

Fund	Funding Source	2018/19	2019/20	2020/21	2021/22	2022/23	TOTAL
		-	-	-	-	-	$0
	TOTAL	$0	$0	$0	$0	$0	$0

PRIORITIZATION CATEGORIES

- ☐ Risk to Health, Safety and Environment
- ☐ Regulatory or Mandated Requirements
- ☐ Asset Condition, Annual Recurring Costs and Asset Longevity
- ☒ Community Investment and Economic Prosperity
- ☒ Level and Quality of Service
- ☐ Sustainability and Conservation
- ☒ Funding Availability
- ☒ Project Readiness
- ☒ Multiple Category Benefit and Bundling Opportunities

NEW OR EXISTING

- ☒ New Infrastructure / Facility
- ☐ Existing Infrastructure / Facility

MARTHA MCLEAN ANZA NARROWS – FRISBEE GOLF COURSE

PROJECT NUMBER 2601 **COUNCIL WARD** 1

PROJECT CATEGORY Parks, Recreation, and Community Services

PROJECT LOCATION Martha McLean Anza Narrows – 5759 Jurupa Avenue

PROJECT DESCRIPTION

Design and construction of an 18-hole frisbee golf course at Martha McLean Anza Park. The improvements include tees, course map, information board, signage, furniture, and minor irrigation and landscape modifications.

PROJECT STATUS

Design in 95% completed. Procurement of materials and installation are anticipated summer 2018.

OPERATING BUDGET IMPACT

No operating impact. Existing site is currently developed and maintained. Installation of a frisbee golf features is not anticipated to be significantly more costly to maintain.

PROJECT FUNDING OVERVIEW

Total Project Cost	Prior Years Funding	Five Year Plan	REMAINING NEEDED
$55,000	$55,000	$0	**$0**

PROPOSED 2-YEAR BUDGET AND 5-YEAR PLAN

Fund	Funding Source	2018/19	2019/20	2020/21	2021/22	2022/23	TOTAL
		-	-	-	-	-	$0
	TOTAL	**$0**	**$0**	**$0**	**$0**	**$0**	**$0**

PRIORITIZATION CATEGORIES

- ☒ Risk to Health, Safety and Environment
- ☐ Regulatory or Mandated Requirements
- ☒ Asset Condition, Annual Recurring Costs and Asset Longevity
- ☒ Community Investment and Economic Prosperity
- ☒ Level and Quality of Service
- ☐ Sustainability and Conservation
- ☒ Funding Availability
- ☒ Project Readiness
- ☒ Multiple Category Benefit and Bundling Opportunities

NEW OR EXISTING

- ☐ New Infrastructure / Facility
- ☒ Existing Infrastructure / Facility

GOESKE SENIOR CENTER - RESTROOM RENOVATION

PROJECT NUMBER 2602 **COUNCIL WARD** 3
PROJECT CATEGORY Parks, Recreation, and Community Services
PROJECT LOCATION Janet Goeske Center, 5257 Sierra Street

PROJECT DESCRIPTION
Design and construction to renovate existing restroom interior and exterior (tiles replacement, paint, partitions, fixtures, signage, ceiling, lights and other items as required) to meet current building codes.

PROJECT STATUS
Project is funded through Community Development Block Grant (CDBG)and Memorandum of Understanding (MOU) have been executed. National Environmental Policy Act review has been completed. Design is anticipated to be completed in 2019.

OPERATING BUDGET IMPACT
None to minimal since this is a renovation of an existing amenity.

PROJECT FUNDING OVERVIEW

Total Project Cost	Prior Years Funding	Five Year Plan	REMAINING NEEDED
$50,000	$50,000	$0	$0

PROPOSED 2-YEAR BUDGET AND 5-YEAR PLAN

Fund	Funding Source	2018/19	2019/20	2020/21	2021/22	2022/23	TOTAL
		-	-	-	-	-	$0
	TOTAL	$0	$0	$0	$0	$0	$0

PRIORITIZATION CATEGORIES

- ☒ Risk to Health, Safety and Environment
- ☒ Regulatory or Mandated Requirements
- ☒ Asset Condition, Annual Recurring Costs and Asset Longevity
- ☒ Community Investment and Economic Prosperity
- ☒ Level and Quality of Service
- ☐ Sustainability and Conservation
- ☒ Funding Availability
- ☒ Project Readiness
- ☒ Multiple Category Benefit and Bundling Opportunities

NEW OR EXISTING

- ☐ New Infrastructure / Facility
- ☒ Existing Infrastructure / Facility

MYRA LINN PARK - ACCESS IMPROVEMENTS

PROJECT NUMBER 2604 **COUNCIL WARD** 6
PROJECT CATEGORY Parks, Recreation, and Community Services
PROJECT LOCATION Myra Linn Park, 4540 Meredith Street

PROJECT DESCRIPTION
Design and construction so the facility is compliant with the Americans With Disability Act (ADA). Project will also include drainage improvement to the basketball court area; including demolition, grading, paving, furniture, drainage, and minor landscaping and irrigation modifications.

PROJECT STATUS
Received site survey and design in progress. Construction anticipated to be scheduled in 2019.

OPERATING BUDGET IMPACT
No operating impact. Existing site is currently developed and maintained. Improvements to ADA access and drainage are not anticipated to be more costly to maintain.

PROJECT FUNDING OVERVIEW

Total Project Cost	Prior Years Funding	Five Year Plan	REMAINING NEEDED
$35,000	$35,000	$0	$0

PROPOSED 2-YEAR BUDGET AND 5-YEAR PLAN

Fund	Funding Source	2018/19	2019/20	2020/21	2021/22	2022/23	TOTAL
		-	-	-	-	-	$0
	TOTAL	$0	$0	$0	$0	$0	$0

PRIORITIZATION CATEGORIES

- ☒ Risk to Health, Safety and Environment
- ☐ Regulatory or Mandated Requirements
- ☐ Asset Condition, Annual Recurring Costs and Asset Longevity
- ☒ Community Investment and Economic Prosperity
- ☒ Level and Quality of Service
- ☐ Sustainability and Conservation
- ☒ Funding Availability
- ☒ Project Readiness
- ☒ Multiple Category Benefit and Bundling Opportunities

NEW OR EXISTING

- ☒ New Infrastructure / Facility
- ☐ Existing Infrastructure / Facility

MYRA LINN PARK - SHADE SAILS

PROJECT NUMBER 2606 **COUNCIL WARD** 6
PROJECT CATEGORY Parks, Recreation, and Community Services
PROJECT LOCATION Myra Linn Park, 4540 Meredith Street

PROJECT DESCRIPTION
Design and construction of shade sails over the age 5-12 playground. Shade sails are a safety enhancement to provide greater comfort for users during the summer.

PROJECT STATUS
Project is funded through Community Development Block Grant (CDBG) and a Memorandum of Understanding (MOU) has been executed. National Environmental Policy Act review has been completed. Design and construction are anticipated to be completed in 2019.

OPERATING BUDGET IMPACT
No significant operating impact. Existing site is currently developed is being maintained. Installation of a shade sails is not anticipated to add significantly to routine maintenance.

PROJECT FUNDING OVERVIEW

Total Project Cost	Prior Years Funding	Five Year Plan	REMAINING NEEDED
$90,000	$90,000	$0	$0

PROPOSED 2-YEAR BUDGET AND 5-YEAR PLAN

Fund	Funding Source	2018/19	2019/20	2020/21	2021/22	2022/23	TOTAL
		-	-	-	-	-	$0
	TOTAL	$0	$0	$0	$0	$0	$0

PRIORITIZATION CATEGORIES

- ☐ Risk to Health, Safety and Environment
- ☐ Regulatory or Mandated Requirements
- ☐ Asset Condition, Annual Recurring Costs and Asset Longevity
- ☒ Community Investment and Economic Prosperity
- ☒ Level and Quality of Service
- ☐ Sustainability and Conservation
- ☒ Funding Availability
- ☒ Project Readiness
- ☒ Multiple Category Benefit and Bundling Opportunities

NEW OR EXISTING

- ☒ New Infrastructure / Facility
- ☐ Existing Infrastructure / Facility

MYRA LINN PARK - FITNESS STATIONS

PROJECT NUMBER 2608 **COUNCIL WARD** 6
PROJECT CATEGORY Parks, Recreation, and Community Services
PROJECT LOCATION Myra Linn Park

PROJECT DESCRIPTION
Design and installation of four fitness stations strategically located along walking path. This project will provide an additional amenity for park users who will be able to increase their fitness levels and reduce obesity.

PROJECT STATUS
Project is funded through Community Development Block Grant (CDBG) and a Memorandum of Understanding (MOU) has been executed. National Environmental Policy Act review has been completed. Design and construction are anticipated to be completed in 2019.

OPERATING BUDGET IMPACT
No significant operating impact. Existing site is currently developed is being maintained. Installation of a fitness equipment is not anticipated to add significantly to routine maintenance.

PROJECT FUNDING OVERVIEW

Total Project Cost	Prior Years Funding	Five Year Plan	REMAINING NEEDED
$90,000	$90,000	$0	$0

PROPOSED 2-YEAR BUDGET AND 5-YEAR PLAN

Fund	Funding Source	2018/19	2019/20	2020/21	2021/22	2022/23	TOTAL
		-	-	-	-	-	$0
	TOTAL	$0	$0	$0	$0	$0	$0

PRIORITIZATION CATEGORIES

- ☐ Risk to Health, Safety and Environment
- ☐ Regulatory or Mandated Requirements
- ☐ Asset Condition, Annual Recurring Costs and Asset Longevity
- ☒ Community Investment and Economic Prosperity
- ☒ Level and Quality of Service
- ☐ Sustainability and Conservation
- ☒ Funding Availability
- ☒ Project Readiness
- ☒ Multiple Category Benefit and Bundling Opportunities

NEW OR EXISTING

- ☐ New Infrastructure / Facility
- ☒ Existing Infrastructure / Facility

LA SIERRA PARK ADA WALKWAY - PHASE I

PROJECT NUMBER 2609 **COUNCIL WARD** 7
PROJECT CATEGORY Parks, Recreation, and Community Services
PROJECT LOCATION La Sierra Park, 5215 La Sierra Avenue

PROJECT DESCRIPTION
Design and construction of pathway that is compliant with the Americans With Disabilities Act (ADA) from the Senior Center parking lot to ballfield and parking lot (DG path, concrete, mow curbs, landscape, and furniture). ADA pathway will provide improved accessibility to the ballfields. The project scope includes adjusting landscape and irrigation, as well as rest areas along the path with trash receptacles and benches.

PROJECT STATUS
Preliminary design concepts in progress.

OPERATING BUDGET IMPACT
No operating impact. Existing site is currently landscaped is being maintained. Installation of a decomposed granite walking path is not anticipated to be more costly to maintain.

PROJECT FUNDING OVERVIEW

Total Project Cost	Prior Years Funding	Five Year Plan	REMAINING NEEDED
$204,077	$204,077	$0	$0

PROPOSED 2-YEAR BUDGET AND 5-YEAR PLAN

Fund	Funding Source	2018/19	2019/20	2020/21	2021/22	2022/23	TOTAL
		-	-	-	-	-	$0
	TOTAL	$0	$0	$0	$0	$0	$0

PRIORITIZATION CATEGORIES

- ☐ Risk to Health, Safety and Environment
- ☐ Regulatory or Mandated Requirements
- ☐ Asset Condition, Annual Recurring Costs and Asset Longevity
- ☒ Community Investment and Economic Prosperity
- ☒ Level and Quality of Service
- ☐ Sustainability and Conservation
- ☒ Funding Availability
- ☒ Project Readiness
- ☒ Multiple Category Benefit and Bundling Opportunities

NEW OR EXISTING

- ☒ New Infrastructure / Facility
- ☐ Existing Infrastructure / Facility

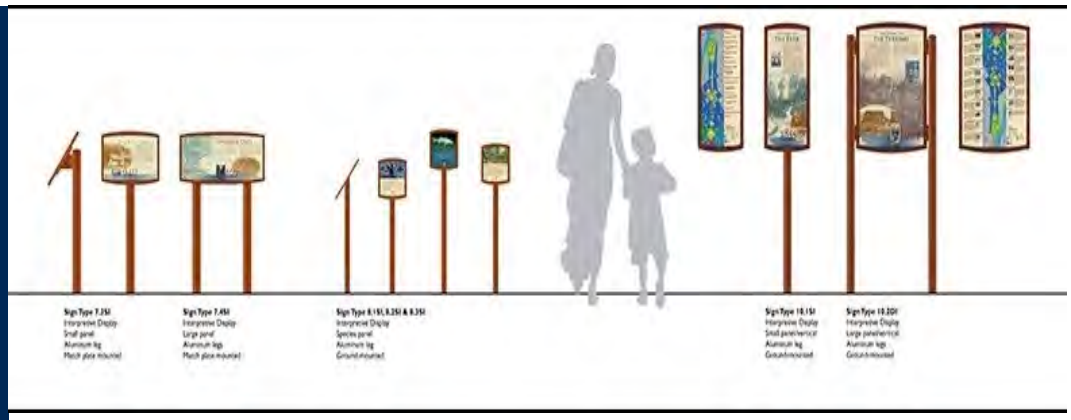

FAIRMOUNT PARK SIGNAGE

PROJECT NUMBER 2641 **COUNCIL WARD** 1
PROJECT CATEGORY Parks, Recreation, and Community Services
PROJECT LOCATION Farimount Park, 2601 Fairmount Boulevard

PROJECT DESCRIPTION
Design and construction of way finding signage with kiosk, golf course sign, new entry sign, traffic, and parking signs. Design will be in accordance with historic character of the original park design.

PROJECT STATUS
Project is funded through Community Development Block Grant (CDBG) and aMemorandum of Understanding (MOU)has been executed. National Environmental Policy Act review has been completed. Design and construction are anticipated to be completed in 2019.

OPERATING BUDGET IMPACT
Updating the Fairmount Park Signage will not significantly impact the operating budget. Site is currently developed and maintained.

PROJECT FUNDING OVERVIEW

Total Project Cost	Prior Years Funding	Five Year Plan	REMAINING NEEDED
$190,000	$190,000	$0	$0

PROPOSED 2-YEAR BUDGET AND 5-YEAR PLAN

Fund	Funding Source	2018/19	2019/20	2020/21	2021/22	2022/23	TOTAL
		-	-	-	-	-	$0
	TOTAL	$0	$0	$0	$0	$0	$0

PRIORITIZATION CATEGORIES

- ☒ Risk to Health, Safety and Environment
- ☒ Regulatory or Mandated Requirements
- ☐ Asset Condition, Annual Recurring Costs and Asset Longevity
- ☒ Community Investment and Economic Prosperity
- ☒ Level and Quality of Service
- ☐ Sustainability and Conservation
- ☒ Funding Availability
- ☒ Project Readiness
- ☒ Multiple Category Benefit and Bundling Opportunities

NEW OR EXISTING

- ☐ New Infrastructure / Facility
- ☒ Existing Infrastructure / Facility

BORDWELL PARK - FLOOR REPLACEMENT

PROJECT NUMBER 2642 **COUNCIL WARD** 2

PROJECT CATEGORY Parks, Recreation, and Community Services

PROJECT LOCATION Bordwell Park, 2008 Martin Luther King Boulevard

PROJECT DESCRIPTION

Replace the existing vinyl composition tile flooring at the Nati Fuentes Centro de Ninos. The project will include installing water moisture barrier and flooring in six class rooms (5,400 square feet), hallway (2900 square feet), and office area (2200 square feet).

PROJECT STATUS

Project is funded through Community Development Block Grant (CDBG) and a Memorandum of Understanding (MOU) has been executed. National Environmental Policy Act review has been completed. Coordination with Centro de Ninos staff and Department staff to schedule construction work and address relocation of staff and programming is in progress. Construction anticipated to commence in summer 2018 and completed by winter 2019.

OPERATING BUDGET IMPACT

No significant operating impact. Existing site is currently developed and maintained. Replacement of floor is not anticipated to significantly alter routine maintenance.

PROJECT FUNDING OVERVIEW

Total Project Cost	Prior Years Funding	Five Year Plan	REMAINING NEEDED
$248,299	$248,299	$0	$0

PROPOSED 2-YEAR BUDGET AND 5-YEAR PLAN

Fund	Funding Source	2018/19	2019/20	2020/21	2021/22	2022/23	TOTAL
		-	-	-	-	-	$0
	TOTAL	$0	$0	$0	$0	$0	$0

PRIORITIZATION CATEGORIES

- ☒ Risk to Health, Safety and Environment
- ☒ Regulatory or Mandated Requirements
- ☐ Asset Condition, Annual Recurring Costs and Asset Longevity
- ☒ Community Investment and Economic Prosperity
- ☒ Level and Quality of Service
- ☐ Sustainability and Conservation
- ☐ Funding Availability
- ☐ Project Readiness
- ☒ Multiple Category Benefit and Bundling Opportunities

NEW OR EXISTING

- ☒ New Infrastructure / Facility
- ☒ Existing Infrastructure / Facility

VILLEGAS PARK - WADING POOL DESIGN

PROJECT NUMBER 2643 **COUNCIL WARD** 4
PROJECT CATEGORY Parks, Recreation, and Community Services
PROJECT LOCATION Ysmael Villegas Park, 3091 Esperanza Street

PROJECT DESCRIPTION
Design of wading pool replacement with a splash pad that is compliant with the Americans With Disabilities Act (ADA). Completion of design will facilitate future grant application for construction. Splash pad to include recirculation and filtering equipment to meet Health Department requirements, as well as fencing, paving, landscape modifications, etc. at Villegas Park which is near existing pool.

PROJECT STATUS
Design project is funded through Community Development Block Grant (CDBG) and a Memorandum of Understanding (MOU) has been executed. National Environmental Policy Act review has been completed. Design is anticipated to be completed by 2020.

OPERATING BUDGET IMPACT
Completion of design for wading pool will not impact the operating budget.

PROJECT FUNDING OVERVIEW

Total Project Cost	Prior Years Funding	Five Year Plan	REMAINING NEEDED
$40,000	$40,000	$0	$0

PROPOSED 2-YEAR BUDGET AND 5-YEAR PLAN

Fund	Funding Source	2018/19	2019/20	2020/21	2021/22	2022/23	TOTAL
		-	-	-	-	-	$0
	TOTAL	$0	$0	$0	$0	$0	$0

PRIORITIZATION CATEGORIES

- ☐ Risk to Health, Safety and Environment
- ☐ Regulatory or Mandated Requirements
- ☐ Asset Condition, Annual Recurring Costs and Asset Longevity
- ☒ Community Investment and Economic Prosperity
- ☐ Level and Quality of Service
- ☐ Sustainability and Conservation
- ☒ Funding Availability
- ☐ Project Readiness
- ☒ Multiple Category Benefit and Bundling Opportunities

NEW OR EXISTING

- ☐ New Infrastructure / Facility
- ☒ Existing Infrastructure / Facility

LA SIERRA PARK ADA WALKWAY - PHASE II

PROJECT NUMBER 2646 **COUNCIL WARD** 7
PROJECT CATEGORY Parks, Recreation, and Community Services
PROJECT LOCATION La Sierra Park

PROJECT DESCRIPTION
Design and construction of a pathway around the ballfields that is compliant with the Americans With Disabilities ACT (ADA). The project will include installing a decomposed granite path with mow curbs, landscaping, and site furniture. The ADA compliant pathway will provide improved accessibility to the ballfields. The project scope includes adjusting landscape and irrigation, as well as rest areas along the path with trash receptacles and benches.

PROJECT STATUS
Preliminary design concepts in progress.

OPERATING BUDGET IMPACT
No operating impact. Existing site is currently landscaped and is being maintained. Installation of a decomposed granite walking path is not anticipated to be more costly to maintain.

PROJECT FUNDING OVERVIEW

Total Project Cost	Prior Years Funding	Five Year Plan	REMAINING NEEDED
$30,000	$30,000	$0	$0

PROPOSED 2-YEAR BUDGET AND 5-YEAR PLAN

Fund	Funding Source	2018/19	2019/20	2020/21	2021/22	2022/23	TOTAL
		-	-	-	-	-	$0
	TOTAL	$0	$0	$0	$0	$0	$0

PRIORITIZATION CATEGORIES

- ☒ Risk to Health, Safety and Environment
- ☐ Regulatory or Mandated Requirements
- ☐ Asset Condition, Annual Recurring Costs and Asset Longevity
- ☐ Community Investment and Economic Prosperity
- ☐ Level and Quality of Service
- ☐ Sustainability and Conservation
- ☐ Funding Availability
- ☐ Project Readiness
- ☐ Multiple Category Benefit and Bundling Opportunities

NEW OR EXISTING

- ☐ New Infrastructure / Facility
- ☒ Existing Infrastructure / Facility

MOUNT RUBIDOUX TRAIL IMPROVEMENTS

PROJECT NUMBER 8952 **COUNCIL WARD** 1
PROJECT CATEGORY Parks, Recreation, and Community Services
PROJECT LOCATION Carlson Park/Mt. Rubidoux

PROJECT DESCRIPTION
Renovation and restoration of the trails on Mt. Rubidoux including hydrologic engineering to stabilize the hillside that is severely impacted by erosion due to off-trail activity above the historic Carlson Falls. The restoration work will include grading to minimize erosion, installation of trail circulation barriers, and signage improvements.

PROJECT STATUS
Site analysis and management plan development completed. Trail modification work in progress.

OPERATING BUDGET IMPACT
No significant operating budget impact. Existing site is currently maintained. Site improvements are not anticipated to significantly alter routine maintenance.

PROJECT FUNDING OVERVIEW

Total Project Cost	Prior Years Funding	Five Year Plan	REMAINING NEEDED
$186,000	$186,000	$0	$0

PROPOSED 2-YEAR BUDGET AND 5-YEAR PLAN

Fund	Funding Source	2018/19	2019/20	2020/21	2021/22	2022/23	TOTAL
		-	-	-	-	-	$0
	TOTAL	$0	$0	$0	$0	$0	$0

PRIORITIZATION CATEGORIES

- ☐ Risk to Health, Safety and Environment
- ☐ Regulatory or Mandated Requirements
- ☐ Asset Condition, Annual Recurring Costs and Asset Longevity
- ☒ Community Investment and Economic Prosperity
- ☐ Level and Quality of Service
- ☐ Sustainability and Conservation
- ☒ Funding Availability
- ☒ Project Readiness
- ☒ Multiple Category Benefit and Bundling Opportunities

NEW OR EXISTING

- ☐ New Infrastructure / Facility
- ☒ Existing Infrastructure / Facility

CARLSON PARK HISTORIC FALLS RESTORATION

PROJECT NUMBER 8957 **COUNCIL WARD** 1
PROJECT CATEGORY Parks, Recreation, and Community Services
PROJECT LOCATION Carlson Park/Mt. Rubidoux

PROJECT DESCRIPTION
This cultural heritage landmark, constructed in 1923, is deteriorating from stormwater run-off from Mt. Rubidoux and erosion due to off-trail activity. Due to the historic significance of Carlson Park, as the formal entrance of Riverside, and the community's desire to rehabilitate the features of park, the Department aims to restore the St. Francis Falls. This project will assess and protect this historic feature from further deterioration.

PROJECT STATUS
Preliminary conceptual plans to protect the fountain are in progress.

OPERATING BUDGET IMPACT
Assessing and protecting the waterfall feature from further deterioration is not anticipated to have a significant impact on operating budget.

PROJECT FUNDING OVERVIEW

Total Project Cost	Prior Years Funding	Five Year Plan	REMAINING NEEDED
$25,000	$25,000	$0	$0

PROPOSED 2-YEAR BUDGET AND 5-YEAR PLAN

Fund	Funding Source	2018/19	2019/20	2020/21	2021/22	2022/23	TOTAL
		-	-	-	-	-	$0
	TOTAL	$0	$0	$0	$0	$0	$0

PRIORITIZATION CATEGORIES

- ☐ Risk to Health, Safety and Environment
- ☒ Regulatory or Mandated Requirements
- ☐ Asset Condition, Annual Recurring Costs and Asset Longevity
- ☒ Community Investment and Economic Prosperity
- ☒ Level and Quality of Service
- ☐ Sustainability and Conservation
- ☒ Funding Availability
- ☒ Project Readiness
- ☒ Multiple Category Benefit and Bundling Opportunities

NEW OR EXISTING

- ☒ New Infrastructure / Facility
- ☒ Existing Infrastructure / Facility

PARKS MASTER PLAN UPDATE

PROJECT NUMBER 9003 **COUNCIL WARD** All Wards
PROJECT CATEGORY Parks, Recreation, and Community Services
PROJECT LOCATION Citywide

PROJECT DESCRIPTION
Provides professional Planning and Design services for Park Master Plan updates. The Master Plan is an essential tool for the Department because it is used to guide decisions and actions. The document supports City and community direction, helps achieve the objectives and policies of the 2025 General Plan, prioritizes projects and resource commitments, and establishes a roadmap to align with City Council goals.

PROJECT STATUS
Contract has been awarded and project is currently underway. Park inventory has been completed. Stakeholder meetings and community meetings are in progress. Completion anticipated fall 2018.

OPERATING BUDGET IMPACT
Updating the parks master plan will not have an impact on the operating budget.

PROJECT FUNDING OVERVIEW

Total Project Cost	Prior Years Funding	Five Year Plan	REMAINING NEEDED
$578,000	$578,000	$0	$0

PROPOSED 2-YEAR BUDGET AND 5-YEAR PLAN

Fund	Funding Source	2018/19	2019/20	2020/21	2021/22	2022/23	TOTAL
		-	-	-	-	-	$0
	TOTAL	$0	$0	$0	$0	$0	$0

NOTES

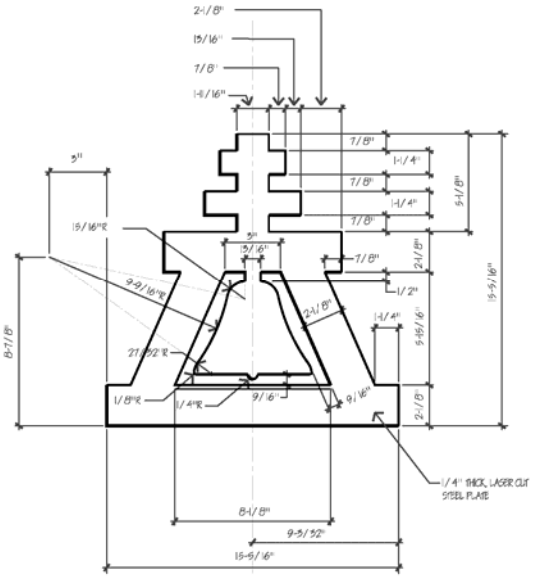
2-1/8"
15/16"
7/8"
1-11/16"
3"
15/16"R
9-9/16"R
27-9/32"R
1/8"R
1/4"R
9/16"
9/16"
7/8"
1-1/4"
7/8"
1-1/4"
7/8"
5-1/8"
7/8"
2-1/8"
1/2"
1-1/4"
5-15/16"
2-1/8"
15-9/16"
8-7/8"
1/4" THICK, LASER CUT STEEL PLATE
8-1/8"
9-9/32"
15-9/16"

CITY OF RIVERSIDE

CAPITAL IMPROVEMENT PROGRAM

PUBLIC PARKING

NOTES

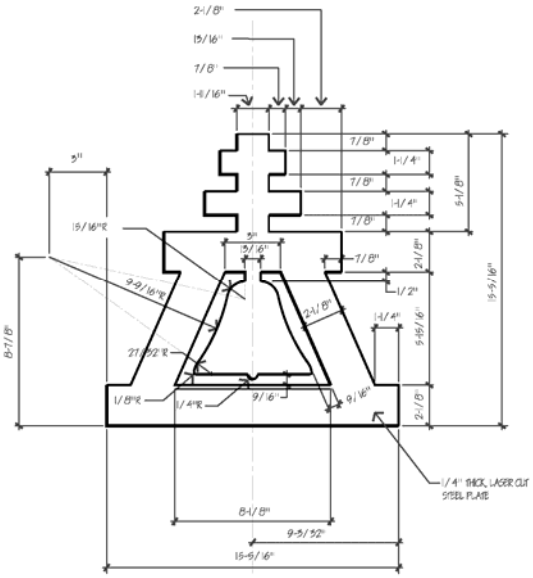
2-1/8"
15/16"
7/8"
1-11/16"
3"
15/16"R
9-9/16"R
8-7/8"
27-52"R
1/8"R
1/4"R
9/16"
9/16"
7/8"
1-1/4"
7/8"
1-1/4"
7/8"
5-1/8"
3"
15/16"
7/8"
2-1/8"
1/2"
2-1/8"
1-1/4"
5-15/16"
15-9/16"
2-1/8"
1/4" THICK, LASER CUT STEEL PLATE
8-1/8"
9-5/32"
15-9/16"

Project Category Overview: Public Parking

Introduction

The Public Parking Services Division promotes and maximizes public parking opportunities that contribute to improving the quality of life in residential and commercial areas citywide. This includes administration of contract services for the operation and maintenance of the City's public parking facilities, keeping related equipment functional, and managing the program's sustainability while remaining customer friendly.

Proposed Two-Year Budget and Five-Year Plan

The downtown area is growing at a significant rate with developments that attract employment opportunities and community events. The increased local activity has augmented the vehicular and pedestrian use of the parking facilities that lead to added maintenance, security and management costs. Recent Council-approved incremental rate increases began during Fiscal Year 2017/18 and the final increases will be applied in Fiscal Year 2018/19.

Initially, these rate increases was expected to cover the following projects, but the loss of parking lots combined with several unexpected one-time costs associated with structural repairs have reduced available funding.

Project Highlights:

City Council approved enhancements within the two-year implementation plan on March 21, 2017, which included the replacement of single and multi-space parking meters that have now reached their end of life and/or will no longer meet credit card processing regulations to securely process payments. Requested funding will replace 249 parking meters.

Project Category Overview: Public Parking

Key Revenues and Funding Sources

Table 1: Funding Sources

Fund	Funding Source	Proposed 2018/19	Proposed 2019/20	Proposed 2020/21	Proposed 2021/22	Proposed 2022/23	Total
		-	-	-	-	-	$0
	TOTAL	$0	$0	$0	$0	$0	$0

Funding for the CIP is derived solely from public parking revenues, which include on and off-street parking, office space leasing, and parking fines. Recent state legislation (Assembly Bill 503 and Assembly Bill 516) will have a negative effect on parking fine revenues going forward, though the exact amount, as yet, is unknown.

- Assembly Bill 503 – now requires cities to offer a payment plan. There are anticipated implementation costs in addition to ongoing administrative costs associated this program.

- Assembly Bill 516 - authorized the DMV to prefund implementation of a new electronic system for dealers to report the sale of vehicles and issuance of temporary licenses. As a result, they have increased their administrative service fee for agencies recording a Notice of Delinquent Parking. This is a per vehicle fee.

The department estimates that a combined loss of $200,000 over the next five years will be due to increased costs imposed by both legislations.

Projects by Major Type of Improvement

Table 2: Schedule of Projects by Major Type of Improvement

Project Type/Project Name	Proposed 2018/19	Proposed 2019/20	Proposed 2020/21	Proposed 2021/22	Proposed 2022/23	Total
	-	-	-	-	-	$0
TOTAL	$0	$0	$0	$0	$0	$0

No projects are funded in the five-year plan.

Project Category Overview: Public Parking

Unfunded Projects

Table 3: Top Unfunded Projects by Priority

Project Name	Estimated Project Cost	Unfunded Amount
1. Replace 32 Version 2 Luke Meters	400,000	400,000
2. Replace 47 Version 3 Luke Meters	575,000	575,000
3. Replace 170 Single Head Meters	100,000	100,000
4. Upgrade To LED Lighting In All Garages	190,000	190,000
5. Replace Garages 1 & 2	32,000,000	32,000,000
TOTAL	**$33,265,000**	**$33,265,000**

Only five projects have been identified for Public Parking in which no funding is available.

Project Category Overview: Public Parking

Project Map

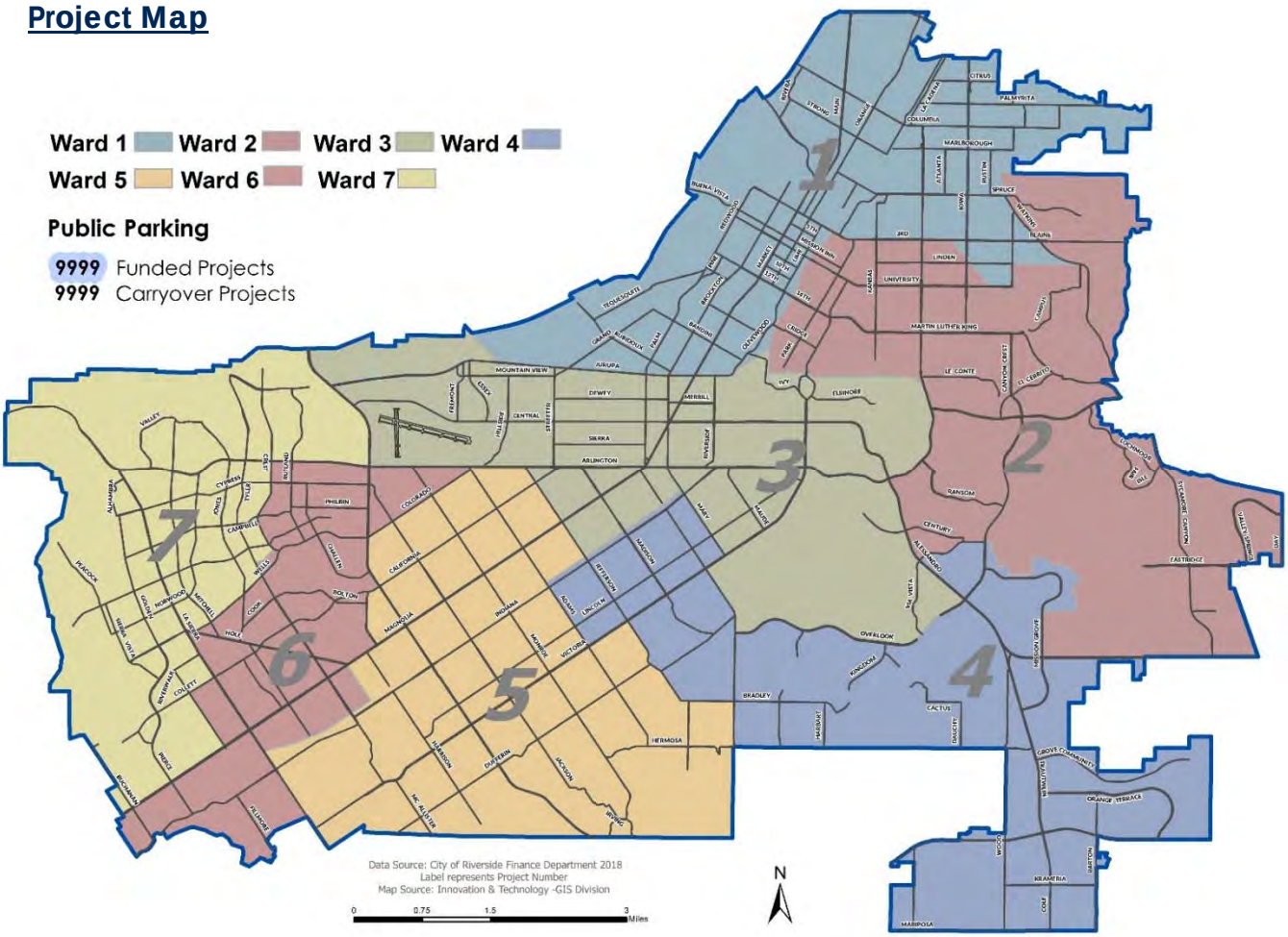

Note: This map includes all active and new capital improvement projects. Ongoing and citywide projects are not included on the map. To view additional information and detailed maps, please visit the City's website at https://riverside.openbook.questica.com.

Graph 1: Distribution by Ward

No new projects are funded in the five-year plan.

Ward	Five-Year Total
Ward 1	-
Ward 2	-
Ward 3	-
Ward 4	-
Ward 5	-
Ward 6	-
Ward 7	-
All Wards	-
Total	**$0**

CITY OF RIVERSIDE

CAPITAL IMPROVEMENT PROGRAM

RAILROAD-RELATED

NOTES

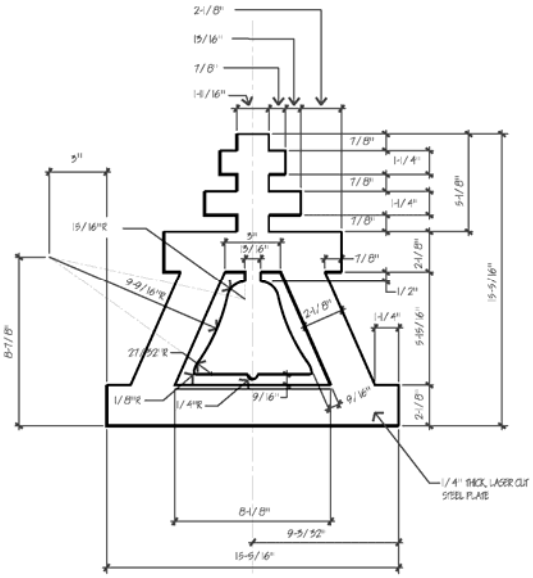
2-1/8"
15/16"
7/8"
1-11/16"
3"
15/16"R
9-9/16"R
27-52"R
1/8"R
1/4"R
9/16"
9/16"
7/8"
1-1/4"
7/8"
1-1/4"
7/8"
5-1/8"
7/8"
2-1/8"
1/2"
2-1/8"
1-1/4"
5-15/16"
2-1/8"
15-9/16"
8-7/8"
1/4" THICK, LASER CUT STEEL PLATE
8-1/8"
9-5/32"
15-9/16"

Project Category Overview: Railroad-Related

Introduction

Railroad related projects are presented in an individual capital improvement program because of the high priority placed on these projects by the City Council and the complexity of funding for the projects. The five-year capital improvement program for Railroad Related projects totals $4.2 million. The proposed program is underfunded by $155.0 million.

Rail projects are a City Council priority because the projects promote public safety, enhance quality of life, and economic vitality. Twenty at-grade BNSF and Union Pacific main line crossings must be mitigated within the City. The estimated cost of grade separating the 20 at-grade crossings is in excess of $800 million. The City's program to mitigate the adverse impacts of the at-grade crossings includes a combination of prioritized grade separations, quiet zones to maximize safety, quality of life improvements, and economic vitality benefits at a reduced cost.

The City continues to work to obtain state and federal funds for railroad grade separation and quiet zone projects. The CIP includes the design and construction of two quiet zone projects. The grade separations included are unfunded and one quiet zone is only partially funded in the five-year period of the CIP.

Proposed Two-Year Budget and Five-Year Plan

The CIP includes the second phase of the Department's grade separation program which is unfunded. The City Council already approved Mary Street, Third Street, Spruce Street, and Jackson Street for concept design and future funding opportunities. Third Street was identified as the City's top priority grade separation and is included as a separate unfunded project in the CIP. A quiet zone for the Union Pacific railroad corridor between Brockton and Palm Avenues is included in the CIP along with a partially funded quiet zone for the BNSF corridor at Mission Inn Avenue, Third Street, and Spruce Street.

Project Highlights:

Union Pacific Quiet Zone – Brockton Avenue and Palm Avenue

The CIP funds the final design, right of way acquisition, and street and rail crossing improvements required to establish a Quiet Zone along the Union Pacific Railroad corridor at the Brockton and Palm Avenue rail crossings. The quiet zone will be established in accordance with the Federal Railroad Administration's (FRA) Final Rule and eliminate the routine sounding of train horns at the rail crossings.

Project Category Overview: Railroad-Related

BNSF Quiet Zone – Mission Inn Avenue, 3rd Street, and Spruce Street

The concept planning and design of the Mission Inn Avenue, 3rd Street, and Spruce Street Quiet Zone is funded during the first two years of the CIP. Planned funding for years three to five of the CIP is sufficient to complete project design, right-of- way acquisition, and partially fund the street and grade crossing improvements required for the quiet zone.

Key Revenues and Funding Sources

Table 1: Funding Sources

Fund	Funding Source	Proposed 2018/19	Proposed 2019/20	Proposed 2020/21	Proposed 2021/22	Proposed 2022/23	Total
230	Gas Tax	323,069	-	-	-	-	$323,069
432	Measure A	742,600	757,500	772,700	788,200	804,000	$3,865,000
	TOTAL	**$1,065,669**	**$757,500**	**$772,700**	**$788,200**	**$804,000**	**$4,188,069**

Local funding for the projects is provided by a ten percent allocation of the City's Local Measure A. Past non-City funding sources for the CIP included state and federal grants and private funds from the railroads.

The complexity of funding sources and high cost per grade separation pose several challenges for the City. Available state and federal grant funding opportunities are limited and very competitive. Major non-City funding sources for grade separation projects have historically included California Public Utilities Commission Section 190 Grade Separation (PUC) funds, federal grants, and private funds from railroads. The State of California's SB-1 Trade Corridor Enhancement Program provides another potential funding source for grade separations.

Funding from non-City sources may not be available in a timely manner to keep projects moving forward, so the City will need to be prepared to advance millions of dollars to projects in anticipation of reimbursement revenues that may not be available until years after expenditures are made. If any non-City funding sources fail to materialize and alternative funding is not obtained, the City may be faced with allocating significant City resources or delayed projects.

The City of Riverside is working with the Riverside County Transportation Commission and other stakeholders to help influence the debate in Sacramento and Washington, DC, and to promote the importance of local highway and railroad transportation projects.

Project Category Overview: Railroad-Related

Projects by Major Type of Improvement

Table 2: Schedule of Projects by Major Type of Improvement

Project Type/Project Name	Proposed 2018/19	Proposed 2019/20	Proposed 2020/21	Proposed 2021/22	Proposed 2022/23	Total
Railroad						
BNSF Quiet Zone - Mission Inn, 3rd, and Spruce	20,600	757,500	772,700	788,200	804,000	$3,143,000
BNSF/Third Street Grade Separation	323,069	-	-	-	-	$323,069
UP Quiet Zone - Brockton and Palm	722,000	-	-	-	-	$722,000
TOTAL	**$1,065,669**	**$757,500**	**$772,700**	**$788,200**	**$804,000**	**$4,188,069**

Unfunded Projects

Table 3: Top Unfunded Projects by Priority

Project Name	Estimated Project Cost	Unfunded Amount
1. Third Street Grade Separation At The BNSF Railroad Street Crossing	45,000,000	44,626,931
2. BNSF Quiet Zone-Mission Inn Ave., 3Rd St., And Spruce St	4,000,000	837,000
3. Phase II Grade Separation Program (Spruce, Jackson and/or Mary)	109,500,000	109,500,000
TOTAL	**$158,500,000**	**$154,963,931**

Public Works identified three railroad capital projects without an identified funding source.

Project Category Overview: Railroad-Related

Project Map

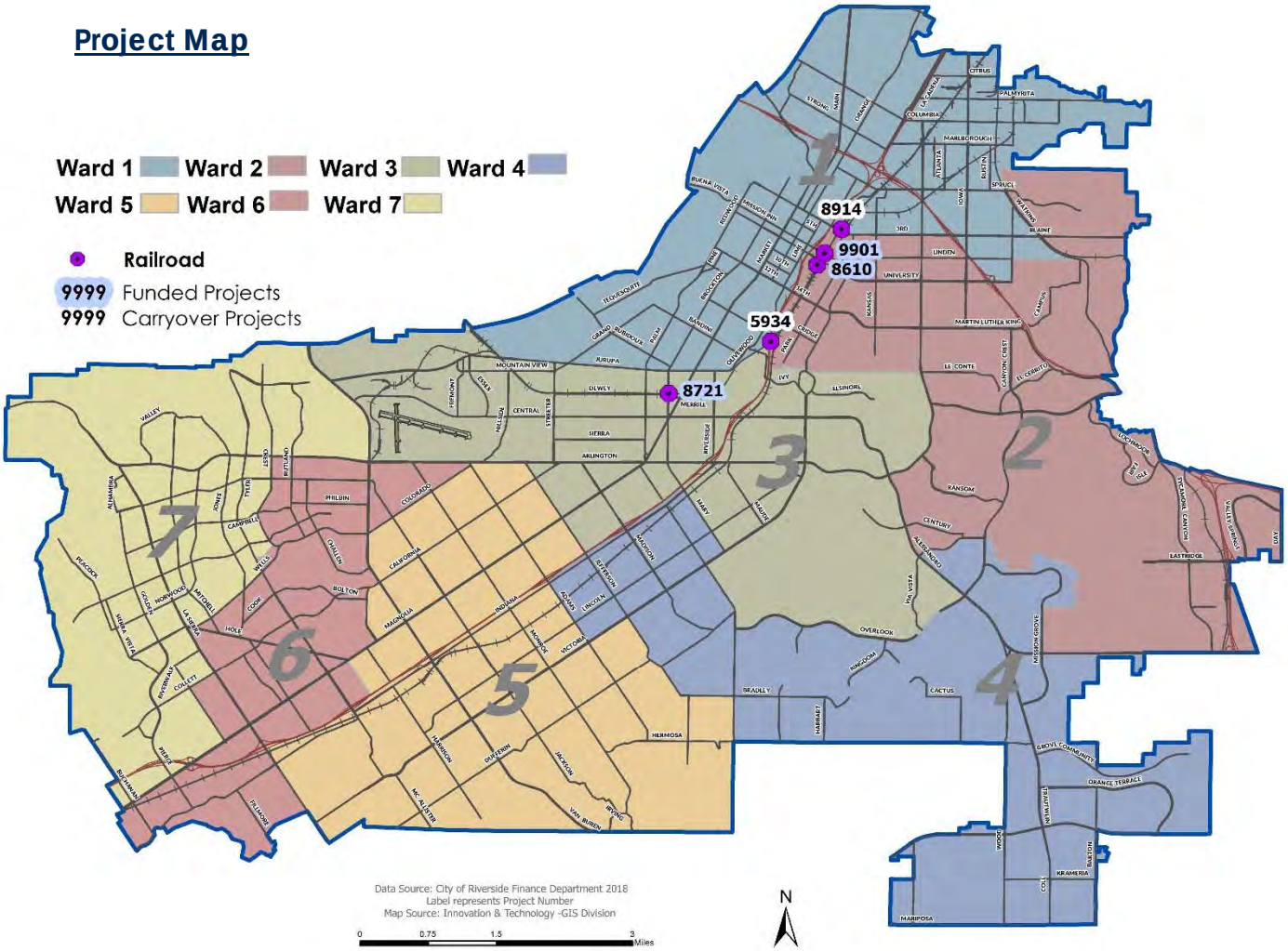

Note: This map includes all active and new capital improvement projects. Ongoing and citywide projects are not included on the map. To view additional information and detailed maps, please visit the City's website at https://riverside.openbook.questica.com.

Graph 1: Distribution by Ward

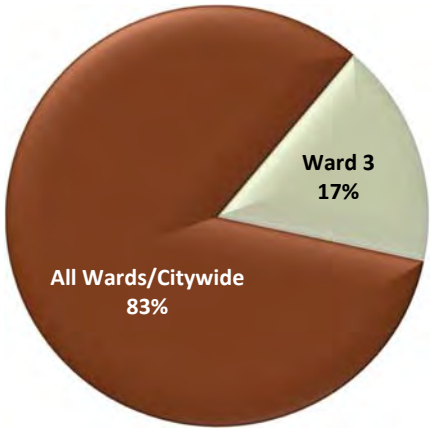

Ward	Five-Year Total
Ward 1	-
Ward 2	-
Ward 3	722,000
Ward 4	-
Ward 5	-
Ward 6	-
Ward 7	-
All Wards	3,466,069
Total	**$4,188,069**

PRIORITIZATION CATEGORIES

- ☒ Risk to Health, Safety and Environment
- ☐ Regulatory or Mandated Requirements
- ☐ Asset Condition, Annual Recurring Costs and Asset Longevity
- ☐ Community Investment and Economic Prosperity
- ☒ Level and Quality of Service
- ☐ Sustainability and Conservation
- ☒ Funding Availability
- ☒ Project Readiness
- ☒ Multiple Category Benefit and Bundling Opportunities

NEW OR EXISTING

- ☒ New Infrastructure / Facility
- ☒ Existing Infrastructure / Facility

BNSF/UP QUIET ZONE - PANORAMA & CRIDGE

PROJECT NUMBER	5934	**COUNCIL WARD**	1, 2, 3
PROJECT CATEGORY	Railroad		
PROJECT LOCATION	Panorama Road and Cridge Street highway-rail crossings		

PROJECT DESCRIPTION

This project will eliminate the routine sounding of train horns by establishing Quiet Zones in accordance with the Federal Railroad Administration's (FRA) Final Rule. The Quiet Zones will be along the Union Pacific (UP) Railroad corridor at Panorama Road and the Burlington Northern Santa Fe (BNSF) Railway corridor at Cridge Street. The project provides for the construction of additional safety improvements consisting of new concrete curb, gutter and sidewalk, tactile strips, directional fencing, warning signs, and grade crossing warning devices at the Panorama Road and Cridge Street highway-rail grade crossings.

PROJECT STATUS

The project is in the final design phase.

OPERATING BUDGET IMPACT

Upon project completion there will be an annual maintenance cost of approximately $50,000 per year per crossing required for UP and BNSF to maintain the crossings.

PROJECT FUNDING OVERVIEW

Total Project Cost	Prior Years Funding	Five Year Plan	REMAINING NEEDED
$5,200,000	$5,200,000	$0	**$0**

PROPOSED 2-YEAR BUDGET AND 5-YEAR PLAN

Fund	Funding Source	2018/19	2019/20	2020/21	2021/22	2022/23	TOTAL
		-	-	-	-	-	$0
	TOTAL	**$0**	**$0**	**$0**	**$0**	**$0**	**$0**

PRIORITIZATION CATEGORIES

- ☒ Risk to Health, Safety and Environment
- ☐ Regulatory or Mandated Requirements
- ☐ Asset Condition, Annual Recurring Costs and Asset Longevity
- ☐ Community Investment and Economic Prosperity
- ☒ Level and Quality of Service
- ☐ Sustainability and Conservation
- ☐ Funding Availability
- ☐ Project Readiness
- ☒ Multiple Category Benefit and Bundling Opportunities

NEW OR EXISTING

- ☒ New Infrastructure / Facility
- ☒ Existing Infrastructure / Facility

BNSF QUIET ZONE - MISSION INN, 3RD, & SPRUCE

PROJECT NUMBER 8610 **COUNCIL WARD** 1, 2

PROJECT CATEGORY Railroad

PROJECT LOCATION BNSF Highway-Rail Crossing Mission Inn, 3rd, & Spruce

PROJECT DESCRIPTION

This project will eliminate the routine sounding of train horns along the Burlington Northern Santa Fe (BNSF) Railway corridor between Mission Inn Avenue and Spruce Street by establishing a Quiet Zone in accordance with the Federal Railroad Administration's (FRA) Final Rule. The project provides for the construction of additional safety improvements consisting of new concrete curb, gutter and sidewalk, tactile strips, directional fencing, warning signs and grade crossing warning devices at the Mission Inn Avenue, 3rd Street and Spruce Street highway-rail grade crossings.

PROJECT STATUS

Concept planning and design is expected to commence in Fiscal Year 2018/2019.

OPERATING BUDGET IMPACT

Upon completion this project will have an annual maintenance cost of approximately $50,000 per year per crossing required for BNSF to maintain the crossings.

PROJECT FUNDING OVERVIEW

Total Project Cost	Prior Years Funding	Five Year Plan	REMAINING NEEDED
$4,000,000	$20,000	$3,143,000	**$837,000**

PROPOSED 2-YEAR BUDGET AND 5-YEAR PLAN

Fund	Funding Source	2018/19	2019/20	2020/21	2021/22	2022/23	TOTAL
432	Measure A Capital Outlay	$20,600	$757,500	$772,700	$788,200	$804,000	$3,143,000
	TOTAL	**$20,600**	**$757,500**	**$772,700**	**$788,200**	**$804,000**	**$3,143,000**

PRIORITIZATION CATEGORIES

- ☒ Risk to Health, Safety and Environment
- ☐ Regulatory or Mandated Requirements
- ☐ Asset Condition, Annual Recurring Costs and Asset Longevity
- ☐ Community Investment and Economic Prosperity
- ☒ Level and Quality of Service
- ☐ Sustainability and Conservation
- ☐ Funding Availability
- ☐ Project Readiness
- ☒ Multiple Category Benefit and Bundling Opportunities

NEW OR EXISTING

- ☒ New Infrastructure / Facility
- ☒ Existing Infrastructure / Facility

UP QUIET ZONE - BROCKTON AND PALM

PROJECT NUMBER 8721 **COUNCIL WARD** 3

PROJECT CATEGORY Railroad

PROJECT LOCATION Brockton Avenue and Palm Avenue highway-rail grade crossings

PROJECT DESCRIPTION

This project will eliminate the routine sounding of train horns along the Union Pacific (UP) Railroad corridor at Brockton Avenue and Palm Avenue by establishing a Quiet Zone in accordance with the Federal Railroad Administration's (FRA) Final Rule. The project provides for the construction of additional safety improvements consisting of new concrete curb, gutter and sidewalk, raised center medians, tactile strips, warning signs and grade crossing warning devices at the Brockton Avenue and Palm Avenue highway-rail grade crossings.

PROJECT STATUS

This project is in the preliminary engineering phase. Construction is anticipated to begin in Fiscal Year 2020/21.

OPERATING BUDGET IMPACT

Upon completion this project will have an annual maintenance cost of approximately $50,000 per year per crossing required for UP to maintain the crossings.

PROJECT FUNDING OVERVIEW

Total Project Cost	Prior Years Funding	Five Year Plan	REMAINING NEEDED
$2,288,100	$1,566,100	$722,000	$0

PROPOSED 2-YEAR BUDGET AND 5-YEAR PLAN

Fund	Funding Source	2018/19	2019/20	2020/21	2021/22	2022/23	TOTAL
423	Measure A Capital Outlay	$722,000	-	-	-	-	$722,000
	TOTAL	$722,000	$0	$0	$0	$0	$722,000

PRIORITIZATION CATEGORIES

- ☒ Risk to Health, Safety and Environment
- ☐ Regulatory or Mandated Requirements
- ☐ Asset Condition, Annual Recurring Costs and Asset Longevity
- ☐ Community Investment and Economic Prosperity
- ☐ Level and Quality of Service
- ☐ Sustainability and Conservation
- ☒ Funding Availability
- ☐ Project Readiness
- ☒ Multiple Category Benefit and Bundling Opportunities

NEW OR EXISTING

- ☒ New Infrastructure / Facility
- ☒ Existing Infrastructure / Facility

BNSF/THIRD STREET RAILROAD CROSSING

PROJECT NUMBER 8914 **COUNCIL WARD** 1, 2
PROJECT CATEGORY Railroad
PROJECT LOCATION Third Street at BNSF Railroad Crossing

PROJECT DESCRIPTION
The project entails the installation of curb, gutter and sidewalk along with the new concrete crossing panels and warning gates being installed by Burlington Northern Santa Fe (BNSF) at the Third Street/BNSF crossing.

PROJECT STATUS
The City of Riverside Public Works Department is working with BNSF Railroad to begin the construction phase of this project.

OPERATING BUDGET IMPACT
There is no anticipated operating budget impact.

PROJECT FUNDING OVERVIEW

Total Project Cost	Prior Years Funding	Five Year Plan	REMAINING NEEDED
$691,875	$691,875	$0	$0

PROPOSED 2-YEAR BUDGET AND 5-YEAR PLAN

Fund	Funding Source	2018/19	2019/20	2020/21	2021/22	2022/23	TOTAL
		-	-	-	-	-	$0
	TOTAL	$0	$0	$0	$0	$0	$0

PRIORITIZATION CATEGORIES

- ☒ Risk to Health, Safety and Environment
- ☐ Regulatory or Mandated Requirements
- ☐ Asset Condition, Annual Recurring Costs and Asset Longevity
- ☐ Community Investment and Economic Prosperity
- ☒ Level and Quality of Service
- ☐ Sustainability and Conservation
- ☐ Funding Availability
- ☐ Project Readiness
- ☒ Multiple Category Benefit and Bundling Opportunities

NEW OR EXISTING

- ☒ New Infrastructure / Facility
- ☒ Existing Infrastructure / Facility

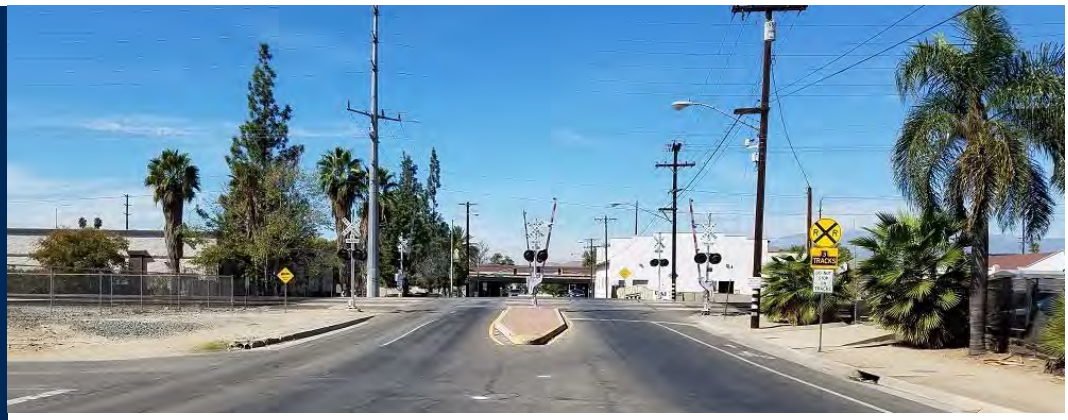

BNSF/THIRD STREET GRADE SEPARATION

PROJECT NUMBER 9901 **COUNCIL WARD** 1, 2
PROJECT CATEGORY Railroad
PROJECT LOCATION 3rd St at the BNSF crossing between Lime St & Park Ave

PROJECT DESCRIPTION
This location is along the Burlington Northern Santa Fe Railroad (BNSF) and the project will reduce traffic congestion by eliminating the at-grade street intersection with the existing railroad lines. The construction of a grade separation will allow for uninterrupted flow of vehicular traffic either above or below the railroad lines. Work includes construction of an underpass for Third Street and the BNSF railroad tracks, construction of temporary shoofly tracks, grading, retaining walls, and a multi-track concrete bridge structure to provide a four-lane roadway beneath the tracks.

PROJECT STATUS
A Request For Proposals (RFP) for Design and Environmental Services will be issued in early 2018 to procure a consultant to complete the Engineering Phase of the project. Funds are actively being pursued for the Right-of-Way and Construction Phases.

OPERATING BUDGET IMPACT
There are no operating budget impacts anticipated when this project is completed.

PROJECT FUNDING OVERVIEW

Total Project Cost	Prior Years Funding	Five Year Plan	REMAINING NEEDED
$45,000,000	$50,000	$323,069	**$44,626,931**

PROPOSED 2-YEAR BUDGET AND 5-YEAR PLAN

Fund	Funding Source	2018/19	2019/20	2020/21	2021/22	2022/23	TOTAL
230	Gas Tax	$323,069	-	-	-	-	$323,069
	TOTAL	**$323,069**	**$0**	**$0**	**$0**	**$0**	**$323,069**

NOTES

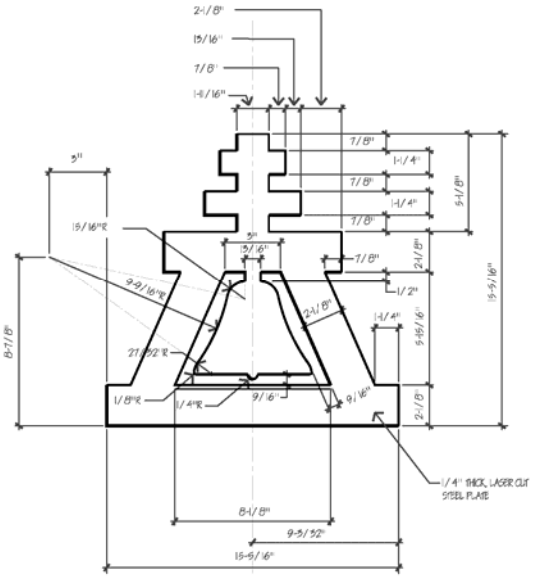
2-1/8"
15/16"
7/8"
1-11/16"
3"
15/16"R
9-9/16"R
27-52"R
1/8"R
1/4"R
9/16"
9/16"
7/8"
1-1/4"
7/8"
1-1/4"
7/8"
5-1/8"
15/16"
7/8"
2-1/8"
1/2"
2-1/8"
1-1/4"
5-15/16"
2-1/8"
15-9/16"
8-7/8"
1/4" THICK, LASER CUT STEEL PLATE
8-1/8"
9-5/32"
15-9/16"

CITY OF RIVERSIDE

CAPITAL IMPROVEMENT PROGRAM

SEWER

NOTES

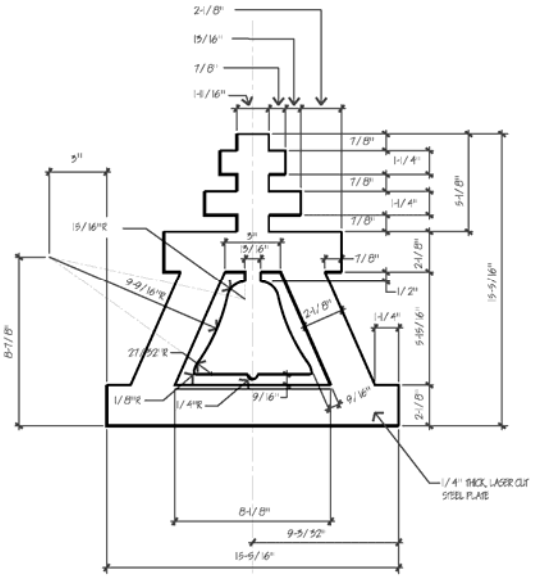
2-1/8"
15/16"
7/8"
1-11/16"
3"
15/16"R
9-9/16"R
27-9/32"R
1/8"R
1/4"R
9/16"
9/16"
7/8"
1-1/4"
7/8"
1-1/4"
7/8"
5-1/8"
7/8"
2-1/8"
1/2"
1-1/4"
5-15/16"
2-1/8"
15-9/16"
8-7/8"
1/4" THICK, LASER CUT STEEL PLATE
8-1/8"
9-9/32"
15-9/16"

Project Category Overview: Sewer

Introduction

The Public Works Department, Wastewater Division, has a staff of approximately 120 that is responsible for the collection and treatment of wastewater for over 93,000 customers within City limits. The wastewater facilities consist of over 800 miles of gravity sewers, 20 wastewater lift stations, and the Riverside Regional Water Quality Control Plant (RWQCP), which has the capacity to treat 46 million gallons per day. Additionally, the RWQCP provides wastewater treatment for the Edgemont, Jurupa, and Rubidoux Community Services Districts, and the unincorporated community of Highgrove.

The CIP for the Sewer Fund is based on current Wastewater Master Plan and is comprised of three primary areas related to the collection, conveyance, and treatment of sewage. The three areas are:

- Compliance with Federal and State Regulations **-** Projects in this category keeps the plant and sewer collections system up to date. The RWQCP facility permit to operate is issued by the State Water Resource Control Board and other evolving Federal and State regulatory requirements.

- Treatment Plant Capacity / Replacements / Structures **-** Projects are designed to increase plant capacity, improve treatment efficiency, reduce system maintenance, and replace infrastructure that has reached its life expectancy.

- Sewer Collection System Projects – These projects complete upgrades to the sewer collection and conveyance system to eliminate the possibility of sanitary sewer overflows, increase capacity, replace deteriorated pipelines and manholes, and provide upgrades to sewer lift/pump stations.

On May 13, 2014 the City Council adopted the Public Works CIP and Rate Development Study (2014 Study). This study included the current five-year CIP (Fiscal Year 2014/15 to Fiscal Year 2018/19) and is consistent with current anticipated capital needs of the RWQCP and the collection system. City Council adopted a five-year sewer rate structure for the period ending in Fiscal year 2018/2019 to fund the CIP. On December 19, 2017 the City Council rescinded the Fiscal Year 2018/19 rate increase, so the City enacted the adopted 2014 rate plan from (Fiscal Year 2014/15 to Fiscal Year 2017/18).

Project Category Overview: Sewer

Proposed Two-Year Budget and Five-Year Plan

Funds have been identified and proposed to be added to the following projects in the upcoming five years:

Project Highlights:

Secondary System Upgrades – Replacement of valves, pumps, motors, instrumentation, and add ventilation to pump rooms.

Tertiary System Rehabilitation – Replacement of existing sand filtration system troughs, inspection of underdrains. Perform a Tertiary Preliminary Design Report to replace the existing sand filtration system with a modern membrane disk filtration.

RWQCP Rehabilitation Phase II – Perform a Preliminary Design Report for rehabilitation of the activated sludge system and potential to increase Membrane Bio-Reactors (MBR) capacity.

Collection System Upgrades – Removal of flow restrictions in sewer mains, repair broken sewer mains, and install cure-in-place sewer pipe liner at various locations throughout the City. Rehabilitate or replace sewer pump stations.

Key Revenues and Funding Sources

Table 1: Funding Sources

Fund	Funding Source	Proposed 2018/19	Proposed 2019/20	Proposed 2020/21	Proposed 2021/22	Proposed 2022/23	Total
550	Sewer	1,900,000	650,500	3,000,000	-	-	5,550,500
	TOTAL	**$1,900,000**	**$650,500**	**$3,000,000**	**$0**	**$0**	**$5,550,500**

Revenues for the Sewer Fund come from sewer rates from the City's residential and non-residential customers. The Sewer Fund Capital Improvement Program is currently funded by sewer rates through the issuance of bond proceeds.

On December 19, 2017, City Council rescinded the Fiscal Year 2018/19 rate increase of 8.5%. With no approved rate increases beyond Fiscal Year 2017/18, this will impact available funding to complete necessary CIP projects. Additionally, there is an increased risk of maintaining required bond debt coverage and the Sewer Fund Bond Rating. Without future rate increases there will be minimal cash funding available for CIP, which will also affect the Sewer Fund Reserve Policy minimum reserve balances.

Project Category Overview: Sewer

The 2016 Wastewater Master Plan update project is in progress and will be complete by the summer/fall of 2018. A revised CIP and sewer rate structure will be developed for the next five-year plan cycle (Fiscal Year 2019/20 to Fiscal Year 2023/24).

Projects by Major Type of Improvement

Table 2: Schedule of Projects by Major Type of Improvement

Project Type/Project Name	Proposed 2018/19	Proposed 2019/20	Proposed 2020/21	Proposed 2021/22	Proposed 2022/23	Total
Plant Capacity Replacements						
Plant 2 Activated Sludge Rehabilitation – Phase I	400,000	250,500	-	-	-	650,500
RWQCP Rehabilitation – Phase II	500,000	-	-	-	-	500,000
Tertiary System Rehab – Phase I	-	400,000	3,000,000	-	-	3,400,000
Total Plant Capacity Replacements	**$900,000**	**$650,500**	**$3,000,000**	**$0**	**$0**	**$4,550,500**
Sewer						
Collection System Upgrades	1,000,000	-	-	-	-	1,000,000
Total Sewer	**$1,000,000**	**$0**	**$0**	**$0**	**$0**	**$1,000,000**
TOTAL	**$1,900,000**	**$650,500**	**$3,000,000**	**$0**	**$0**	**$5,550,500**

Unfunded Projects

Table 3: Top Ten Unfunded Projects by Priority

Project Name	Estimated Project Cost	Unfunded Amount
1. Plant 2 Activated Sludge Rehabilitation - Phase II	199,500	199,500
2. RWQCP Rehabilitation - Phase II	2,000,000	2,000,000
3. Dexter Wastewater	1,200,000	1,200,000
4. Fairgrounds Wastewater	1,200,000	1,200,000
5. Wastewater Lift Stations	2,000,000	900,000
6. Wastewater Lift Station Projects - Phase II	5,200,000	5,200,000
7. Tertiary System Rehabilitation - Phase II	4,800,000	4,800,000
8. Phoenix Priority A, B And C Sewer Construction	4,945,000	4,945,000
9. Tequesquite Priority A, B And C Sewer Construction - Phase II	4,700,000	4,700,000
10. Arlanza Neighborhood Sewer Mains Rehab	4,800,000	4,800,000
TOTAL	**$31,044,500**	**$29,944,500**

Project Category Overview: Sewer

Project Map

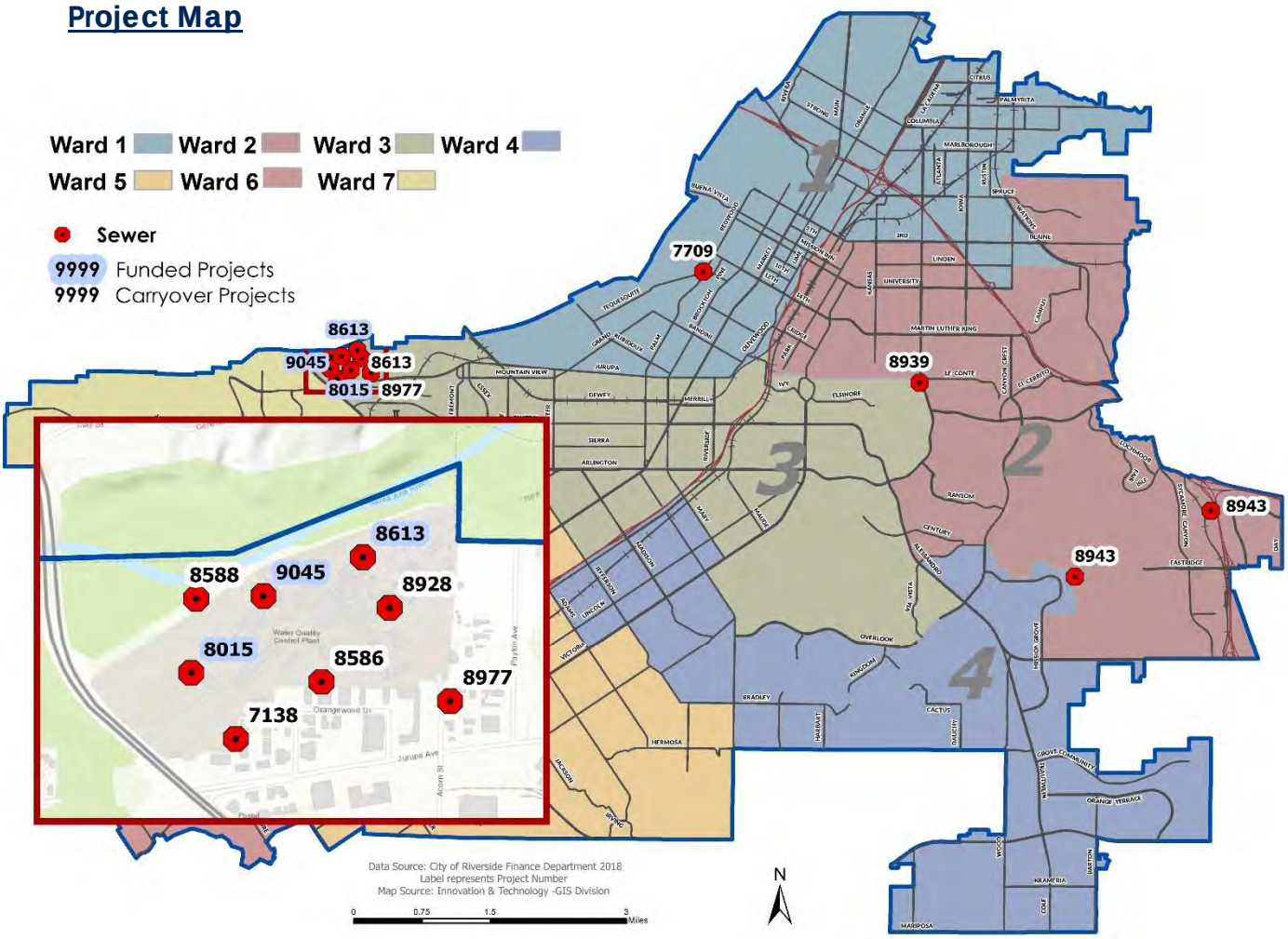

Note: This map includes all active and new capital improvement projects. Ongoing and citywide projects are not included on the map. To view additional information and detailed maps, please visit the City's website at https://riverside.openbook.questica.com.

Graph 1: Distribution by Ward

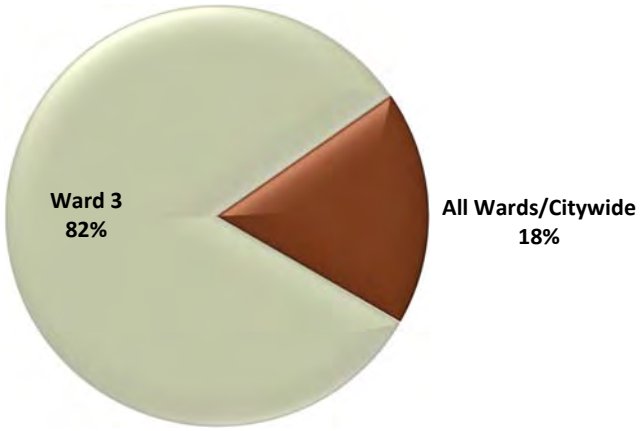

Ward	Five-Year Total
Ward 1	-
Ward 2	-
Ward 3	4,550,500
Ward 4	-
Ward 5	-
Ward 6	-
Ward 7	-
All Wards	1,000,000
Total	**$5,550,500**

PRIORITIZATION CATEGORIES

- ☒ Risk to Health, Safety and Environment
- ☒ Regulatory or Mandated Requirements
- ☐ Asset Condition, Annual Recurring Costs and Asset Longevity
- ☐ Community Investment and Economic Prosperity
- ☐ Level and Quality of Service
- ☒ Sustainability and Conservation
- ☒ Funding Availability
- ☒ Project Readiness
- ☒ Multiple Category Benefit and Bundling Opportunities

NEW OR EXISTING

- ☐ New Infrastructure / Facility
- ☒ Existing Infrastructure / Facility

SECONDARY SYSTEM UPGRADES

PROJECT NUMBER 7138 **COUNCIL WARD** 3
PROJECT CATEGORY Sanitary Sewer System
PROJECT LOCATION 5950 Acorn St, Riverside CA

PROJECT DESCRIPTION
The Work consists of construction of new aeration blower facility, upgrading and retrofitting existing aeration basins at Plant 1 and Plant 2 in the City of Riverside Water Quality Control Plant.

PROJECT STATUS
The scope of work was completed for phase 1 of the Secondary System Upgrade. Due to the life cycle of secondary system equipment, phase 2 of the Secondary System upgrade is currently being discussed as part of the 2016 Master Plan.

OPERATING BUDGET IMPACT
As this is an ongoing project to upgrade existing equipment and systems, there will not be additional O&M expenses incurred.

PROJECT FUNDING OVERVIEW

Total Project Cost	Prior Years Funding	Five Year Plan	REMAINING NEEDED
Ongoing	$13,081,551	$0	Ongoing

PROPOSED 2-YEAR BUDGET AND 5-YEAR PLAN

Fund	Funding Source	2018/19	2019/20	2020/21	2021/22	2022/23	TOTAL
		-	-	-	-	-	$0
	TOTAL	$0	$0	$0	$0	$0	$0

PRIORITIZATION CATEGORIES

- ☒ Risk to Health, Safety and Environment
- ☒ Regulatory or Mandated Requirements
- ☒ Asset Condition, Annual Recurring Costs and Asset Longevity
- ☒ Community Investment and Economic Prosperity
- ☐ Level and Quality of Service
- ☒ Sustainability and Conservation
- ☒ Funding Availability
- ☒ Project Readiness
- ☒ Multiple Category Benefit and Bundling Opportunities

NEW OR EXISTING

- ☐ New Infrastructure / Facility
- ☒ Existing Infrastructure / Facility

TEQUESQUITE/ARROYO TRUNK LINE

PROJECT NUMBER 7709 **COUNCIL WARD** 1

PROJECT CATEGORY Sanitary Sewer System

PROJECT LOCATION Phase I: Tequesquite Park, Phase II: Olivewood Avenue

PROJECT DESCRIPTION

The existing pipe was constructed in the 1940's and the 1960's. In 2003, a sewer master plan study was completed and the sewer model indicated that this stretch of pipe is under capacity. Replaces the old and undersized 21 to 24-inch sewer mains with 36-inch sewer mains.

PROJECT STATUS

Phase One was completed in June 2011. A portion of Phase Two was completed in August 2014. A construction contract to complete the final portion of Phase II is anticipated to be awarded by the City Council on April 3, 2018.

OPERATING BUDGET IMPACT

Project is upgrading existing pipeline and will not cause an increase to ongoing operating costs once the project is complete.

PROJECT FUNDING OVERVIEW

Total Project Cost	Prior Years Funding	Five Year Plan	REMAINING NEEDED
$28,500,913	$28,500,913	$0	$0

PROPOSED 2-YEAR BUDGET AND 5-YEAR PLAN

Fund	Funding Source	2018/19	2019/20	2020/21	2021/22	2022/23	TOTAL
		-	-	-	-	-	$0
	TOTAL	$0	$0	$0	$0	$0	$0

PRIORITIZATION CATEGORIES

- ☒ Risk to Health, Safety and Environment
- ☐ Regulatory or Mandated Requirements
- ☐ Asset Condition, Annual Recurring Costs and Asset Longevity
- ☐ Community Investment and Economic Prosperity
- ☐ Level and Quality of Service
- ☐ Sustainability and Conservation
- ☒ Funding Availability
- ☒ Project Readiness
- ☒ Multiple Category Benefit and Bundling Opportunities

NEW OR EXISTING

- ☒ New Infrastructure / Facility
- ☒ Existing Infrastructure / Facility

COLLECTION SYSTEM UPGRADES

PROJECT NUMBER 7989 **COUNCIL WARD** All Wards
PROJECT CATEGORY Sanitary Sewer System
PROJECT LOCATION Citywide

PROJECT DESCRIPTION
This project will include the replacement, rehabilitation, and removal of flow restrictions in the sanitary sewer collection system at various locations throughout the City. Specifically, it will remove existing flow restrictors, repair broken sewer main lines, and line the interior of the pipes with cure-in-place pipeliner at various locations throughout the City.

PROJECT STATUS
This project is currently under design.

OPERATING BUDGET IMPACT
Reduce maintenance frequency and chances of overflow by lining the interior pipes. The project will not result in additional ongoing operating costs once complete.

PROJECT FUNDING OVERVIEW

Total Project Cost	Prior Years Funding	Five Year Plan	REMAINING NEEDED
Ongoing	$1,491,375	$1,000,000	Ongoing

PROPOSED 2-YEAR BUDGET AND 5-YEAR PLAN

Fund	Funding Source	2018/19	2019/20	2020/21	2021/22	2022/23	TOTAL
550	Sewer	$1,000,000	-	-	-	-	$1,000,000
	TOTAL	**$1,000,000**	**$0**	**$0**	**$0**	**$0**	**$1,000,000**

PRIORITIZATION CATEGORIES

- ☐ Risk to Health, Safety and Environment
- ☒ Regulatory or Mandated Requirements
- ☒ Asset Condition, Annual Recurring Costs and Asset Longevity
- ☒ Community Investment and Economic Prosperity
- ☐ Level and Quality of Service
- ☒ Sustainability and Conservation
- ☐ Funding Availability
- ☐ Project Readiness
- ☒ Multiple Category Benefit and Bundling Opportunities

NEW OR EXISTING

- ☒ New Infrastructure / Facility
- ☒ Existing Infrastructure / Facility

RWQCP REHABILITATION - PHASE II

PROJECT NUMBER 8015 **COUNCIL WARD** 3
PROJECT CATEGORY Sanitary Sewer System
PROJECT LOCATION Water Quality Control Plant (WQCP)

PROJECT DESCRIPTION
The Preliminary Design Report and design of an additional aeration basin for the Membrane Bio-Reactors (MBR), additional MBR train and expand Chlorine Contact Basin 2 that was mandated by the National Pollutant Discharge Elimination System (NPDES) Permit as authorized by the Clean Water Act.

PROJECT STATUS
This project will begin in early 2019.

OPERATING BUDGET IMPACT
Project will not require additional operating impacts as it is intended to rehab an existing system.

PROJECT FUNDING OVERVIEW

Total Project Cost	Prior Years Funding	Five Year Plan	REMAINING NEEDED
$500,000	$0	$500,000	**$0**

PROPOSED 2-YEAR BUDGET AND 5-YEAR PLAN

Fund	Funding Source	2018/19	2019/20	2020/21	2021/22	2022/23	TOTAL
550	Sewer	$500,000	-	-	-	-	$500,000
	TOTAL	**$500,000**	**$0**	**$0**	**$0**	**$0**	**$500,000**

PRIORITIZATION CATEGORIES

- ☒ Risk to Health, Safety and Environment
- ☒ Regulatory or Mandated Requirements
- ☐ Asset Condition, Annual Recurring Costs and Asset Longevity
- ☐ Community Investment and Economic Prosperity
- ☐ Level and Quality of Service
- ☐ Sustainability and Conservation
- ☐ Funding Availability
- ☐ Project Readiness
- ☒ Multiple Category Benefit and Bundling Opportunities

NEW OR EXISTING

- ☒ New Infrastructure / Facility
- ☐ Existing Infrastructure / Facility

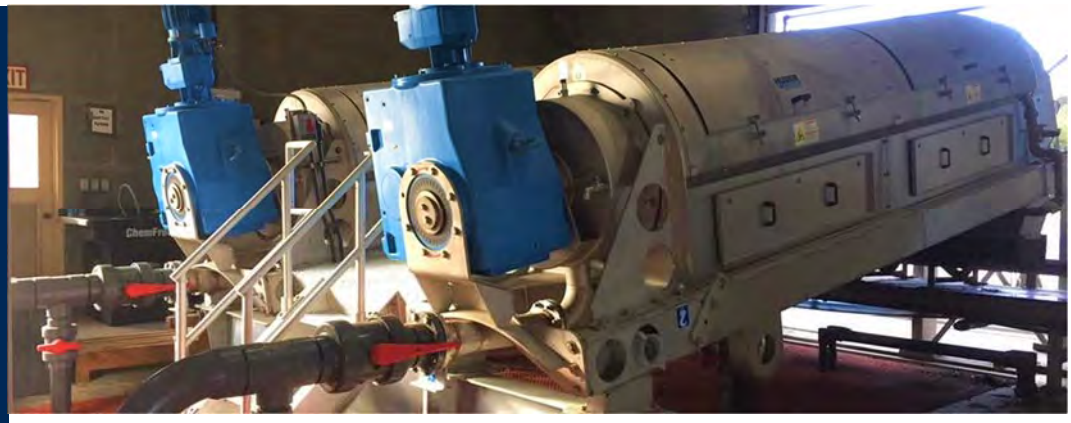

DEWATERING SCREW PRESSES

PROJECT NUMBER 8586 **COUNCIL WARD** 3
PROJECT CATEGORY Sanitary Sewer System
PROJECT LOCATION 5950 Acorn Street, WQCP Bio-Solids Building

PROJECT DESCRIPTION
Procure and install by City plant forces six Huber Rotamat RoS3Q-800 Screw Presses for sludge dewatering.

PROJECT STATUS
Two screw press have been install and in operation. Remaining four screw press will be install late summer 2018.

OPERATING BUDGET IMPACT
Due to the nature of the operations for the presses, once installed there will not be significant operation and maintenance costs associated with running this machinery.

PROJECT FUNDING OVERVIEW

Total Project Cost	Prior Years Funding	Five Year Plan	REMAINING NEEDED
$2,435,983	$2,435,983	$0	$0

PROPOSED 2-YEAR BUDGET AND 5-YEAR PLAN

Fund	Funding Source	2018/19	2019/20	2020/21	2021/22	2022/23	TOTAL
		-	-	-	-	-	$0
	TOTAL	$0	$0	$0	$0	$0	$0

PRIORITIZATION CATEGORIES

- ☒ Risk to Health, Safety and Environment
- ☒ Regulatory or Mandated Requirements
- ☐ Asset Condition, Annual Recurring Costs and Asset Longevity
- ☐ Community Investment and Economic Prosperity
- ☐ Level and Quality of Service
- ☐ Sustainability and Conservation
- ☐ Funding Availability
- ☐ Project Readiness
- ☒ Multiple Category Benefit and Bundling Opportunities

NEW OR EXISTING

- ☐ New Infrastructure / Facility
- ☒ Existing Infrastructure / Facility

WQCP LEVEE UPGRADE

PROJECT NUMBER 8588 **COUNCIL WARD** 3
PROJECT CATEGORY Sanitary Sewer System
PROJECT LOCATION WQCP-5950 Acorn Street

PROJECT DESCRIPTION
Levee will be raised from zero to six feet in height for approximately 2,400 linear feet with an added floodwall ranging in height from zero to four feet.

PROJECT STATUS
Construction is ongoing and contractor is approximately 40% complete.

OPERATING BUDGET IMPACT
No additional operating impacts expected once the levee is upgraded.

PROJECT FUNDING OVERVIEW

Total Project Cost	Prior Years Funding	Five Year Plan	REMAINING NEEDED
$5,988,407	$5,988,407	$0	$0

PROPOSED 2-YEAR BUDGET AND 5-YEAR PLAN

Fund	Funding Source	2018/19	2019/20	2020/21	2021/22	2022/23	TOTAL
		-	-	-	-	-	$0
	TOTAL	$0	$0	$0	$0	$0	$0

PRIORITIZATION CATEGORIES

- ☒ Risk to Health, Safety and Environment
- ☒ Regulatory or Mandated Requirements
- ☐ Asset Condition, Annual Recurring Costs and Asset Longevity
- ☐ Community Investment and Economic Prosperity
- ☐ Level and Quality of Service
- ☐ Sustainability and Conservation
- ☐ Funding Availability
- ☐ Project Readiness
- ☒ Multiple Category Benefit and Bundling Opportunities

NEW OR EXISTING

- ☒ New Infrastructure / Facility
- ☒ Existing Infrastructure / Facility

TERTIARY SYSTEM REHAB - PHASE I

PROJECT NUMBER 8613 **COUNCIL WARD** 3
PROJECT CATEGORY Sanitary Sewer System
PROJECT LOCATION Water Quality Control Plant (WQCP)

PROJECT DESCRIPTION
This project is for the rehabilitation of the Tertiary System: replacement troughs, inspections, Tertiary Preliminary Design Report, and replacement media beds to cloth filters.

PROJECT STATUS
This project will begin in early 2019.

OPERATING BUDGET IMPACT
Project will not require additional operating impacts as it is intended to rehab an existing system.

PROJECT FUNDING OVERVIEW

Total Project Cost	Prior Years Funding	Five Year Plan	REMAINING NEEDED
$4,850,000	$1,450,000	$3,400,000	$0

PROPOSED 2-YEAR BUDGET AND 5-YEAR PLAN

Fund	Funding Source	2018/19	2019/20	2020/21	2021/22	2022/23	TOTAL
550	Sewer	-	$400,000	$3,000,000	-	-	$3,400,000
	TOTAL	$0	$400,000	$3,000,000	$0	$0	$3,400,000

PRIORITIZATION CATEGORIES

- ☒ Risk to Health, Safety and Environment
- ☒ Regulatory or Mandated Requirements
- ☐ Asset Condition, Annual Recurring Costs and Asset Longevity
- ☐ Community Investment and Economic Prosperity
- ☐ Level and Quality of Service
- ☐ Sustainability and Conservation
- ☐ Funding Availability
- ☐ Project Readiness
- ☒ Multiple Category Benefit and Bundling Opportunities

NEW OR EXISTING

- ☒ New Infrastructure / Facility
- ☒ Existing Infrastructure / Facility

BIO-SOLIDS HANDLING REHABILITATION

PROJECT NUMBER 8928 **COUNCIL WARD** 3
PROJECT CATEGORY Sanitary Sewer System
PROJECT LOCATION Water Quality Control Plant (WQCP)

PROJECT DESCRIPTION
Rehabilitation of the Water Quality Control Plant (WQCP) bio-solids sludge process and building, mandated per National Pollutant Discharge Elimination System (NPDES) Permit authorized by the Clean Water Act.

PROJECT STATUS
Part of Project in Design: Ventilation and Order Control System, Dry Polymer Feed System and Strain Presses. In Planning Stage: Replacement of sludge pumps and motors, Waste Activated (WAS) yard piping, sludge upsizing piping, and painting of exterior of building.

OPERATING BUDGET IMPACT
No operating impact. This project is a rehabilitation of existing facilities and will not require additional operation and maintenance costs.

PROJECT FUNDING OVERVIEW

Total Project Cost	Prior Years Funding	Five Year Plan	REMAINING NEEDED
$2,840,000	$2,840,000	$0	$0

PROPOSED 2-YEAR BUDGET AND 5-YEAR PLAN

Fund	Funding Source	2018/19	2019/20	2020/21	2021/22	2022/23	TOTAL
		-	-	-	-	-	$0
	TOTAL	$0	$0	$0	$0	$0	$0

PRIORITIZATION CATEGORIES

- ☒ Risk to Health, Safety and Environment
- ☐ Regulatory or Mandated Requirements
- ☐ Asset Condition, Annual Recurring Costs and Asset Longevity
- ☒ Community Investment and Economic Prosperity
- ☒ Level and Quality of Service
- ☐ Sustainability and Conservation
- ☒ Funding Availability
- ☒ Project Readiness
- ☒ Multiple Category Benefit and Bundling Opportunities

NEW OR EXISTING

- ☒ New Infrastructure / Facility
- ☐ Existing Infrastructure / Facility

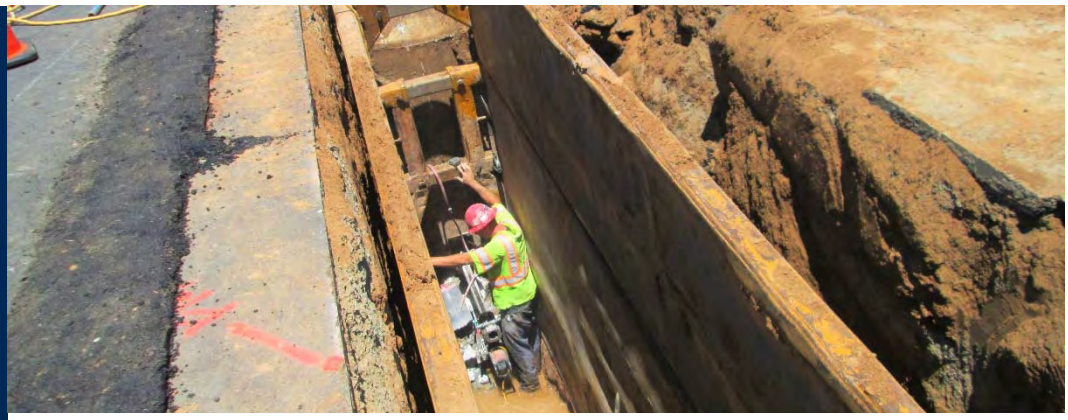

SPRUCE PRIORITY B&C SEWER CONSTRUCTION

PROJECT NUMBER 8939 **COUNCIL WARD** 3
PROJECT CATEGORY Sanitary Sewer System
PROJECT LOCATION Various

PROJECT DESCRIPTION
This project proposes to replace the under-capacity 18-inch sewer main with 21-inch sewer main on Spruce Street and the undersized 12-inch and 15-inch sewer mains with 15-inch and 18-inch on Chicago Avenue.

PROJECT STATUS
This project is currently in the design phase.

OPERATING BUDGET IMPACT
Project being done to upgrade existing sewer main. Does not require additional operation and maintenance expenditures once complete.

PROJECT FUNDING OVERVIEW

Total Project Cost	Prior Years Funding	Five Year Plan	REMAINING NEEDED
$2,000,000	$2,000,000	$0	$0

PROPOSED 2-YEAR BUDGET AND 5-YEAR PLAN

Fund	Funding Source	2018/19	2019/20	2020/21	2021/22	2022/23	TOTAL
		-	-	-	-	-	$0
	TOTAL	$0	$0	$0	$0	$0	$0

PRIORITIZATION CATEGORIES

- ☒ Risk to Health, Safety and Environment
- ☐ Regulatory or Mandated Requirements
- ☒ Asset Condition, Annual Recurring Costs and Asset Longevity
- ☒ Community Investment and Economic Prosperity
- ☒ Level and Quality of Service
- ☐ Sustainability and Conservation
- ☐ Funding Availability
- ☐ Project Readiness
- ☒ Multiple Category Benefit and Bundling Opportunities

NEW OR EXISTING

- ☒ New Infrastructure / Facility
- ☒ Existing Infrastructure / Facility

TEQUESQUITE PRIORITY A, B, AND C SEWER CONSTRUCTION

PROJECT NUMBER	8941	**COUNCIL WARD**	2, 4
PROJECT CATEGORY	Sanitary Sewer System		
PROJECT LOCATION	Various		

PROJECT DESCRIPTION

This project will replace under-capacity sewer main segments on Trautwein Road, and install new sewer mains on Cridge Street and Victoria Avenue, to minimize the risk of sewage overflow, and to accommodate for the future growth within this drainage area of the City.

This project will:

- Replace the undersized 8-inch sewer main segments with 10-inch pipe on Trautwein Road.
- Install new 30-inch sewer main on Cridge Street to increase sewage conveyance capacity.
- Install new 30-inch sewer main on Victoria Avenue to increase sewage conveyance capacity.

PROJECT STATUS

Will begin design phase in June 2018.

OPERATING BUDGET IMPACT

There are no other operational impacts related to this project.

PROJECT FUNDING OVERVIEW

Total Project Cost	Prior Years Funding	Five Year Plan	REMAINING NEEDED
$3,775,000	$3,775,000	$0	**$0**

PROPOSED 2-YEAR BUDGET AND 5-YEAR PLAN

Fund	Funding Source	2018/19	2019/20	2020/21	2021/22	2022/23	TOTAL
		-	-	-	-	-	$0
	TOTAL	**$0**	**$0**	**$0**	**$0**	**$0**	**$0**

PRIORITIZATION CATEGORIES

- ☒ Risk to Health, Safety and Environment
- ☒ Regulatory or Mandated Requirements
- ☐ Asset Condition, Annual Recurring Costs and Asset Longevity
- ☒ Community Investment and Economic Prosperity
- ☒ Level and Quality of Service
- ☐ Sustainability and Conservation
- ☒ Funding Availability
- ☒ Project Readiness
- ☒ Multiple Category Benefit and Bundling Opportunities

NEW OR EXISTING

- ☒ New Infrastructure / Facility
- ☒ Existing Infrastructure / Facility

WASTEWATER LIFT STATIONS

PROJECT NUMBER 8943 **COUNCIL WARD** 2, 4
PROJECT CATEGORY Sanitary Sewer System
PROJECT LOCATION Various

PROJECT DESCRIPTION
To ensure reliable and uninterrupted sewage services, this project will replace dilapidated mechanical parts, upgrade the electrical, pump control, communication systems, and install electrical components to connect to emergency generator power.

Replacement and upgrading of the:

- Rivercrest Sewer Wastewater Station located at 6013 River Crest Drive
- Lakewood Sewer Wastewater Station located at 6730 Darkwood Drive

PROJECT STATUS
The project is currently under design.

OPERATING BUDGET IMPACT
No additional operating impacts will result from the upgraded wastewater lift stations.

PROJECT FUNDING OVERVIEW

Total Project Cost	Prior Years Funding	Five Year Plan	REMAINING NEEDED
$2,000,000	$1,100,000	$0	**$900,000**

PROPOSED 2-YEAR BUDGET AND 5-YEAR PLAN

Fund	Funding Source	2018/19	2019/20	2020/21	2021/22	2022/23	TOTAL
		-	-	-	-	-	$0
	TOTAL	**$0**	**$0**	**$0**	**$0**	**$0**	**$0**

PRIORITIZATION CATEGORIES

- ☒ Risk to Health, Safety and Environment
- ☒ Regulatory or Mandated Requirements
- ☐ Asset Condition, Annual Recurring Costs and Asset Longevity
- ☒ Community Investment and Economic Prosperity
- ☒ Level and Quality of Service
- ☐ Sustainability and Conservation
- ☒ Funding Availability
- ☒ Project Readiness
- ☒ Multiple Category Benefit and Bundling Opportunities

NEW OR EXISTING

- ☐ New Infrastructure / Facility
- ☒ Existing Infrastructure / Facility

PLANT 2 BLOWER NO.2 REHAB/REPLACEMENT

PROJECT NUMBER 8977 **COUNCIL WARD** 3

PROJECT CATEGORY Sanitary Sewer System

PROJECT LOCATION 5950 Acorn Street, WQCP-Blower Building

PROJECT DESCRIPTION

Procure and install by Design/Build Entity one 600 HP dual core turbo blower, including mechanical, electrical, integration and structural work.

PROJECT STATUS

Design/Build Entity will begin work once Notice to Proceed is issued.

OPERATING BUDGET IMPACT

This is a rehabilitation and replacement project for parts of an existing blower. No additional costs to operations and maintenance once the equipment is repaired.

PROJECT FUNDING OVERVIEW

Total Project Cost	Prior Years Funding	Five Year Plan	REMAINING NEEDED
$1,452,615	$1,452,615	$0	$0

PROPOSED 2-YEAR BUDGET AND 5-YEAR PLAN

Fund	Funding Source	2018/19	2019/20	2020/21	2021/22	2022/23	TOTAL
		-	-	-	-	-	$0
	TOTAL	$0	$0	$0	$0	$0	$0

PRIORITIZATION CATEGORIES

- ☒ Risk to Health, Safety and Environment
- ☒ Regulatory or Mandated Requirements
- ☐ Asset Condition, Annual Recurring Costs and Asset Longevity
- ☐ Community Investment and Economic Prosperity
- ☐ Level and Quality of Service
- ☐ Sustainability and Conservation
- ☐ Funding Availability
- ☐ Project Readiness
- ☒ Multiple Category Benefit and Bundling Opportunities

NEW OR EXISTING

- ☐ New Infrastructure / Facility
- ☒ Existing Infrastructure / Facility

PLANT 2 ACTIVATED SLUDGE REHAB - PHASE I

PROJECT NUMBER 9045 **COUNCIL WARD** 3
PROJECT CATEGORY Sanitary Sewer System
PROJECT LOCATION Water Quality Control Plant (WQCP)

PROJECT DESCRIPTION
Rehabilitation of Plant 2 equipment: valves, pumps, variable speed motors, electrical and instrumentation panels, ventilation systems and lighting mandated per National Pollutant Discharge Elimination System (NPDES). Permit authorized by the Clean Water Act.

PROJECT STATUS
Project has not started.

OPERATING BUDGET IMPACT
Project is for rehabilitation purposes and will not require additional budget to maintain.

PROJECT FUNDING OVERVIEW

Total Project Cost	Prior Years Funding	Five Year Plan	REMAINING NEEDED
$650,000	$0	$650,500	**$0**

PROPOSED 2-YEAR BUDGET AND 5-YEAR PLAN

Fund	Funding Source	2018/19	2019/20	2020/21	2021/22	2022/23	TOTAL
550	Sewer	$400,000	$250,500	-	-	-	$650,500
	TOTAL	**$400 ,000**	**$250,500**	**$0**	**$0**	**$0**	**$650,500**

NOTES

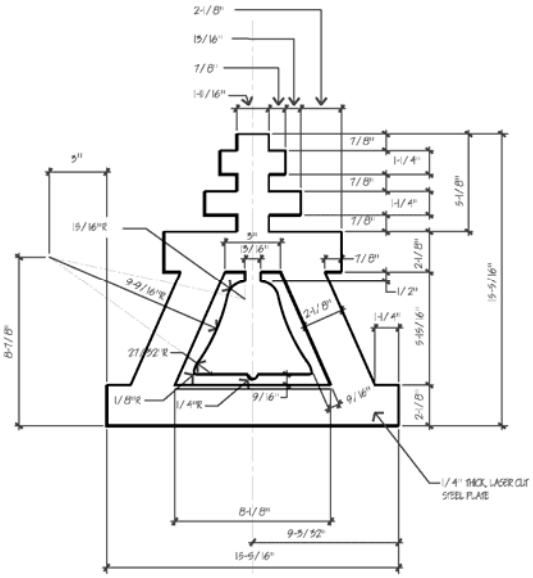
2-1/8"
15/16"
7/8"
1-11/16"
3"
15/16"R
9-9/16"R
27-52"R
1/8"R
1/4"R
9/16"
9/16"
7/8"
1-1/4"
7/8"
1-1/4"
7/8"
5-1/8"
7/8"
2-1/8"
1/2"
2-1/8"
1-1/4"
5-15/16"
2-1/8"
15-9/16"
8-7/8"
1/4" THICK, LASER CUT STEEL PLATE
8-1/8"
9-5/32"
15-9/16"

CITY OF RIVERSIDE

CAPITAL IMPROVEMENT PROGRAM

STORM DRAIN

NOTES

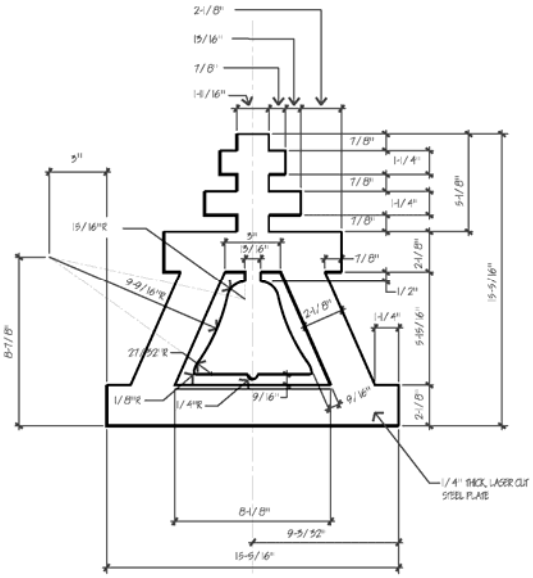
2-1/8"
15/16"
7/8"
1-11/16"
3"
15/16"R
9-9/16"R
8-7/8"
27-9/32"R
1/8"R
1/4"R
9/16"
9/16"
7/8"
1-1/4"
7/8"
1-1/4"
7/8"
5-1/8"
3"
15/16"
7/8"
2-1/8"
1/2"
2-1/8"
1-1/4"
5-15/16"
15-9/16"
2-1/8"
1/4" THICK, LASER CUT STEEL PLATE
8-1/8"
9-9/32"
15-9/16"

Project Category Overview: Storm Drain

Introduction

The Storm Drain section of the Public Works department maintains the City's drainage systems in order to facilitate a clean and healthy environment and to assist in the prevention of flooding conditions.

Proposed Two-Year Budget and Five-Year Plan

The five-year Capital Improvement Program for the Storm Drain Fund totals $1,450,000. Storm drain improvement projects are prioritized in a manner that ensures installation of drainage improvements in concert with street improvement projects, in coordination with Riverside County Flood Control District projects, and in support of economic development projects.

Project Highlights:

Fairview Avenue/Cornwall Avenue Storm Drain Project: The Project proposes construction of new RCP pipe and catch basins to capture nuisance/storm water runoff within Cornwall Avenue/Fairview Avenue streets before entering into private arroyo to protect public health. This project funded by storm drain fees.

Key Revenues and Funding Sources

Table 1: Funding Sources

Fund	Funding Source	Proposed 2018/19	Proposed 2019/20	Proposed 2020/21	Proposed 2021/22	Proposed 2022/23	Total
410	Storm Drain DIF	1,050,000	100,000	100,000	100,000	100,000	$1,450,000
	TOTAL	**$1,050,000**	**$100,000**	**$100,000**	**$100,000**	**$100,000**	**$1,450,000**

Storm drain capital improvements are funded out of the Storm Drain Fund, established by Section 16.08.050 of the Riverside Municipal Code. The revenues are derived from storm drain development impact fees (DIF) collected with the issuance of building permits. The City's storm drain needs outweigh the available funding sources at this point.

Project Category Overview: Storm Drain

Projects by Major Type of Improvement

Table 2: Schedule of Projects by Major Type of Improvement

Project Type/Project Name	Proposed 2018/19	Proposed 2019/20	Proposed 2020/21	Proposed 2021/22	Proposed 2022/23	Total
Storm Drains						
Fairview & Cornwall Storm Drain Project	950,000	-	-	-	-	$950,000
Miscellaneous Storm Drain Construction	100,000	$100,000	$100,000	$100,000	$100,000	$500,000
TOTAL	**$1,050,000**	**$100,000**	**$100,000**	**$100,000**	**$100,000**	**$1,450,000**

Unfunded Projects

Table 3: Top Unfunded Projects by Priority

Project Name	Estimated Project Cost	Unfunded Amount
1. North Orange St Storm Drain Project	150,000	150,000
2. Cypress Ave Storm Drain Project	1,250,000	1,250,000
3. Fourteenth St Underpass Pump Station Project	3,200,000	3,200,000
TOTAL	**$4,600,000**	**$4,600,000**

Public Works identified three storm drain capital projects without an identified funding source.

Project Category Overview: Storm Drain

Project Map

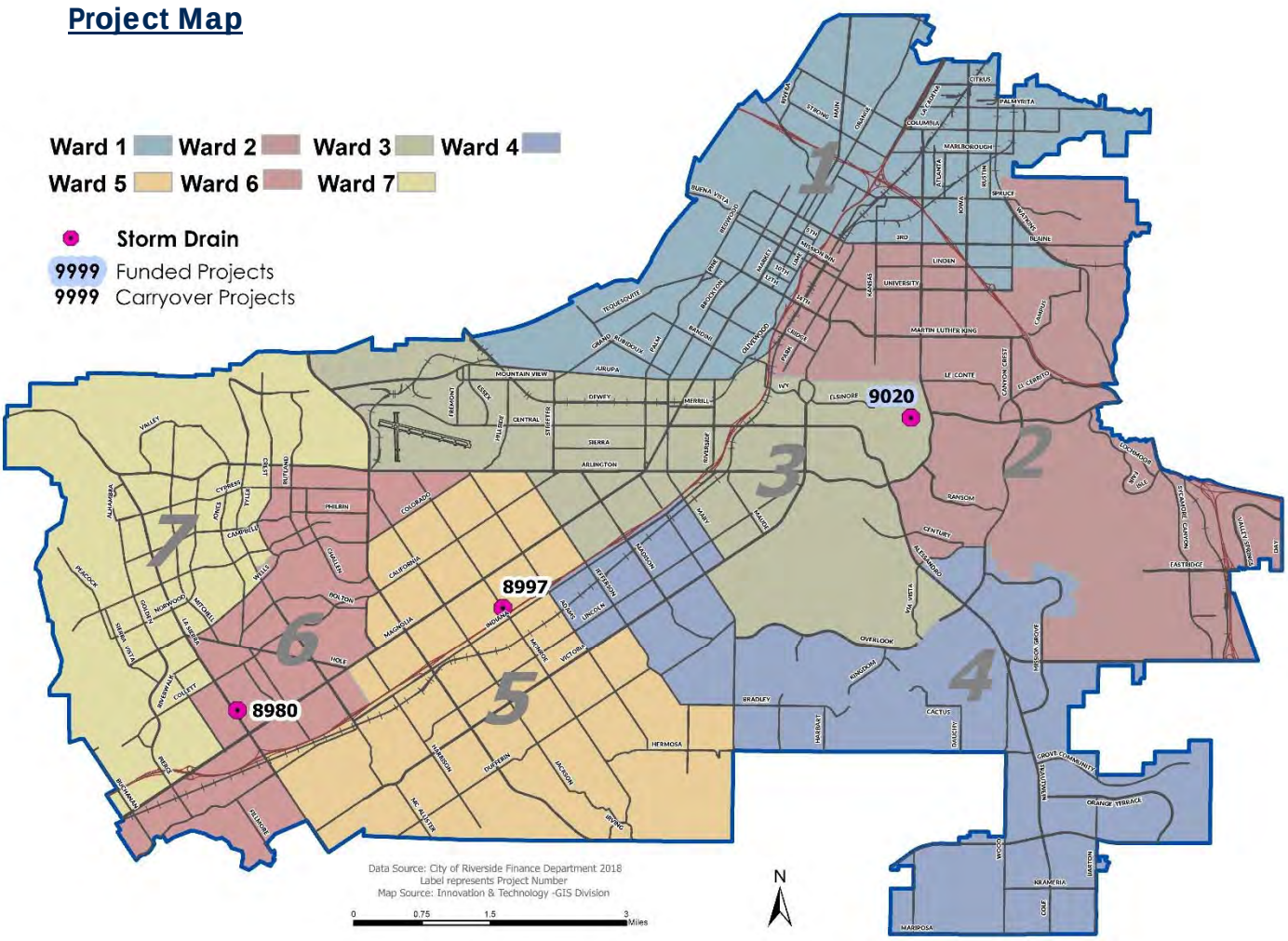

Note: This map includes all active and new capital improvement projects. Ongoing and citywide projects are not included on the map. To view additional information and detailed maps, please visit the City's website at https://riverside.openbook.questica.com.

Graph 1: Distribution by Ward

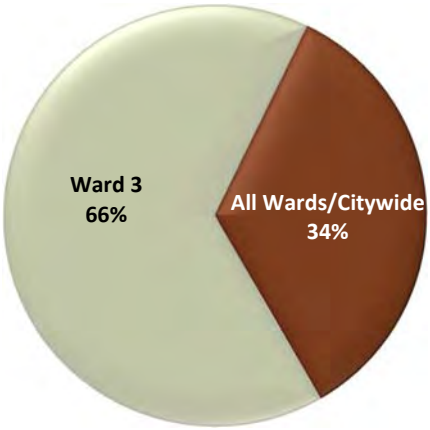

Ward	Five-Year Total
Ward 1	-
Ward 2	-
Ward 3	950,000
Ward 4	-
Ward 5	-
Ward 6	-
Ward 7	-
All Wards	500,000
Total	**$1,450,000**

NOTES

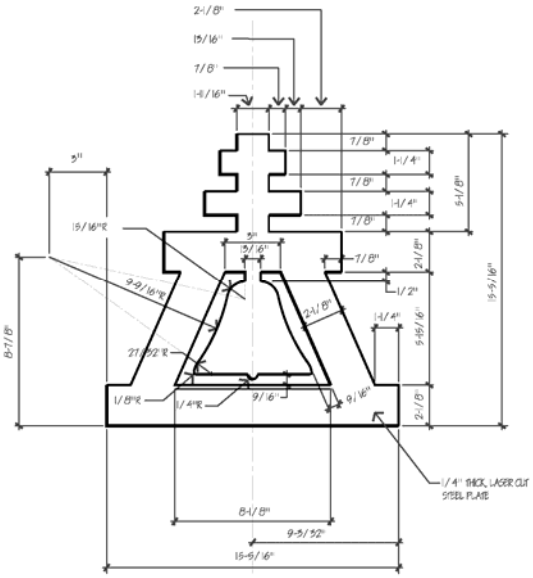
2-1/8"
15/16"
7/8"
1-11/16"
3"
15/16"R
9-9/16"R
8-7/8"
27-52"R
1/8"R
1/4"R
9/16"
9/16"
7/8"
1-1/4"
7/8"
1-1/4"
7/8"
5-1/8"
3"
15/16"
7/8"
2-1/8"
1/2"
2-1/8"
1-1/4"
5-15/16"
2-1/8"
15-9/16"
1/4" THICK, LASER CUT STEEL PLATE
8-1/8"
9-5/32"
15-9/16"

PRIORITIZATION CATEGORIES

- ☒ Risk to Health, Safety and Environment
- ☒ Regulatory or Mandated Requirements
- ☒ Asset Condition, Annual Recurring Costs and Asset Longevity
- ☐ Community Investment and Economic Prosperity
- ☒ Level and Quality of Service
- ☒ Sustainability and Conservation
- ☒ Funding Availability
- ☒ Project Readiness
- ☒ Multiple Category Benefit and Bundling Opportunities

NEW OR EXISTING

- ☒ New Infrastructure / Facility
- ☒ Existing Infrastructure / Facility

MISCELLANEOUS STORM DRAIN CONSTRUCTION

PROJECT NUMBER 7001 **COUNCIL WARD** All Wards
PROJECT CATEGORY Storm Drain System
PROJECT LOCATION Citywide

PROJECT DESCRIPTION
City funds are allocated to allow for City staff to work on various projects, issues, and concerns that present themselves during the year. The project also includes removal and replacement of drainage pipe, culverts, inlet and outlet structures, v-ditch, asphalt/earthen swale, catch basins, curbs, gutters, and cross-gutters to provide proper drainage and avoid flooding.

PROJECT STATUS
The Storm Drain section of the Public Works Department continuously maintains the City's drainage system in order to facilitate a clean and healthy environment and to assist in the prevention of flooding conditions in prioritized manner.

OPERATING BUDGET IMPACT
This is an ongoing project to maintain the City's Storm Drain System. There are no operating budget impacts associated with this ongoing project.

PROJECT FUNDING OVERVIEW

Total Project Cost	Prior Years Funding	Five Year Plan	REMAINING NEEDED
Ongoing	$586,231	$500,000	Ongoing

PROPOSED 2-YEAR BUDGET AND 5-YEAR PLAN

Fund	Funding Source	2018/19	2019/20	2020/21	2021/22	2022/23	TOTAL
410	Storm Drain DIF	$100,000	$100,000	$100,000	$100,000	$100,000	$500,000
	TOTAL	$100,000	$100,000	$100,000	$100,000	$100,000	$500,000

PRIORITIZATION CATEGORIES

- ☒ Risk to Health, Safety and Environment
- ☐ Regulatory or Mandated Requirements
- ☐ Asset Condition, Annual Recurring Costs and Asset Longevity
- ☐ Community Investment and Economic Prosperity
- ☒ Level and Quality of Service
- ☐ Sustainability and Conservation
- ☒ Funding Availability
- ☒ Project Readiness
- ☒ Multiple Category Benefit and Bundling Opportunities

NEW OR EXISTING

- ☒ New Infrastructure / Facility
- ☐ Existing Infrastructure / Facility

COCHRAN STORM DRAIN PROJECT

PROJECT NUMBER 8980 **COUNCIL WARD** 6
PROJECT CATEGORY Storm Drain System
PROJECT LOCATION Cochran Street and La Sierra Avenue

PROJECT DESCRIPTION
This project will construct a new 36-inch reinforced concrete pipe (RCP) with catch basins within street right-of-away and construct porous gutter to minimize drainage related concerns.

PROJECT STATUS
The project is currently in the construction phase with an anticipated completion date of August 2019.

OPERATING BUDGET IMPACT
Once completed, the storm drain will require annual maintenance of approximately $5,000 per year.

PROJECT FUNDING OVERVIEW

Total Project Cost	Prior Years Funding	Five Year Plan	REMAINING NEEDED
$910,000	$910,000	$0	$0

PROPOSED 2-YEAR BUDGET AND 5-YEAR PLAN

Fund	Funding Source	2018/19	2019/20	2020/21	2021/22	2022/23	TOTAL
		-	-	-	-	-	$0
	TOTAL	$0	$0	$0	$0	$0	$0

PRIORITIZATION CATEGORIES

- ☒ Risk to Health, Safety and Environment
- ☒ Regulatory or Mandated Requirements
- ☒ Asset Condition, Annual Recurring Costs and Asset Longevity
- ☐ Community Investment and Economic Prosperity
- ☒ Level and Quality of Service
- ☒ Sustainability and Conservation
- ☒ Funding Availability
- ☒ Project Readiness
- ☒ Multiple Category Benefit and Bundling Opportunities

NEW OR EXISTING

- ☒ New Infrastructure / Facility
- ☐ Existing Infrastructure / Facility

MONROE STORM DRAIN PROJECT (Lines E2, E3, E5)

PROJECT NUMBER 8997 **COUNCIL WARD** 5

PROJECT CATEGORY Storm Drain System

PROJECT LOCATION Gratton St from Lincoln Ave to Hermosa Dr

PROJECT DESCRIPTION

This project will add another 18 inches to the existing 72-inch diameter pipe and catch basins/inlet structures within street right-of-way to capture run-off from the green belt area.

PROJECT STATUS

This project is currently in the design phase. Construction is anticipated to begin in 2019.

OPERATING BUDGET IMPACT

Regular maintenance of the catch basin will be required; however, the project will eliminate the maintenance currently required during and after storm events resulting in a reduction in net operating impacts.

PROJECT FUNDING OVERVIEW

Total Project Cost	Prior Years Funding	Five Year Plan	REMAINING NEEDED
$12,674,370	$12,674,370	$0	$0

PROPOSED 2-YEAR BUDGET AND 5-YEAR PLAN

Fund	Funding Source	2018/19	2019/20	2020/21	2021/22	2022/23	TOTAL
		-	-	-	-	-	$0
	TOTAL	$0	$0	$0	$0	$0	$0

PRIORITIZATION CATEGORIES

- ☒ Risk to Health, Safety and Environment
- ☒ Regulatory or Mandated Requirements
- ☒ Asset Condition, Annual Recurring Costs and Asset Longevity
- ☐ Community Investment and Economic Prosperity
- ☒ Level and Quality of Service
- ☒ Sustainability and Conservation
- ☒ Funding Availability
- ☒ Project Readiness
- ☒ Multiple Category Benefit and Bundling Opportunities

NEW OR EXISTING

- ☒ New Infrastructure / Facility
- ☐ Existing Infrastructure / Facility

FAIRVIEW & CORNWALL STORM DRAIN PROJECT

PROJECT NUMBER 9020 **COUNCIL WARD** 3
PROJECT CATEGORY Storm Drain System
PROJECT LOCATION Fairview Drive and Cornwall Avenue

PROJECT DESCRIPTION
This project will add new pipe and catch basins at the intersection of Fairview Drive and Cornwall Avenue within street right-of-way in order to capture run-off from the street.

PROJECT STATUS
The design phase is anticipated to begin in August 2018.

OPERATING BUDGET IMPACT
Once completed, the storm drain will require annual maintenance which will cost approximately $1,500 per year.

PROJECT FUNDING OVERVIEW

Total Project Cost	Prior Years Funding	Five Year Plan	REMAINING NEEDED
$950,000	$0	$950,000	$0

PROPOSED 2-YEAR BUDGET AND 5-YEAR PLAN

Fund	Funding Source	2018/19	2019/20	2020/21	2021/22	2022/23	TOTAL
410	Storm Drain DIF	$950,000	-	-	-	-	$950,000
	TOTAL	$950,000	$0	$0	$0	$0	$950,000

CITY OF RIVERSIDE

CAPITAL IMPROVEMENT PROGRAM

TRANSPORTATION

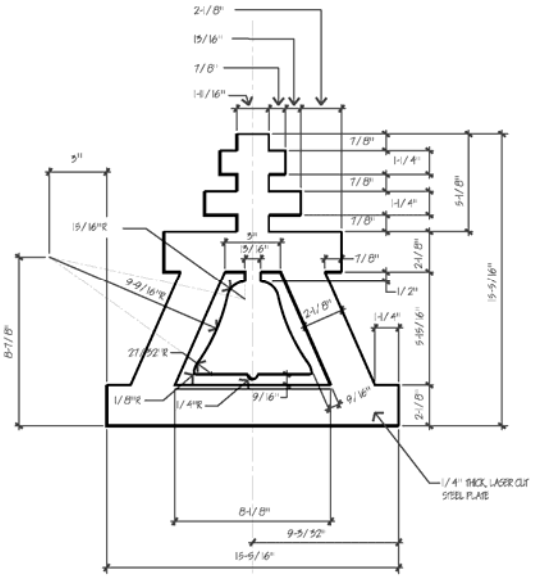
2-1/8"
15/16"
7/8"
1-11/16"
3"
15/16"R
9-9/16"R
27-9/32"R
1/8"R
1/4"R
9/16"
9/16"
7/8"
1-1/4"
7/8"
1-1/4"
7/8"
5-1/8"
3"
15/16"
7/8"
2-1/8"
1/2"
2-1/8"
1-1/4"
5-15/16"
2-1/8"
15-9/16"
8-7/8"
1/4" THICK, LASER CUT STEEL PLATE
8-1/8"
9-9/32"
15-9/16"

Project Category Overview: Transportation

Introduction

Transportation CIP Projects include the new construction, replacement, rehabilitation, and repair of roadways/streets, sidewalk, curb, gutter, and traffic signal improvements. Transportation infrastructure, as in the public right of way, is the backbone of the City's public infrastructure and assets. This is where the residents, visitors, and businesses come to live, work, and play.

Proposed Two-Year Budget and Five-Year Plan

The Fiscal Year 2018/19 to Fiscal Year 2022/23 CIP is a planning document intended to prioritize and allocate City funds for transportation improvements. The program includes two major sections, Streets and Traffic Signals, at a total funded cost of $80.6 million. The proposed program is underfunded by $217.7 million.

The Traffic Signal Program for Fiscal Year 2018/19 through 2022/23 includes construction of new traffic signals and modifications to existing signals to improve safety, traffic flow, and reduce delay at intersections.

The Streets Program for Fiscal Year 2018/19 through Fiscal Year 2022/23 is designed to meet City Council priorities while reducing the backlog of uncompleted projects. The focus of the Streets Program is to rehabilitate local and arterial streets to extend their useful life and the repair of curbs, gutters, and sidewalks. The program will also construct pedestrian ramps to comply with the Americans with Disabilities Act (ADA). A new Pavement Management Program (PMP) is being implemented to assist with prioritizing streets to include the rehabilitation and preservation projects. The PMP is designed to optimize funding available to maintain the roadways in the most cost effective and efficient manner.

Project Highlights:

Traffic Management Center

This is an ongoing project to monitor real time traffic in order to refine and produce signal timing plans, improve vehicular mobility, and make necessary

Project Category Overview: Transportation

traffic signal timing adjustments based on observation of City streets via CCTV cameras.

Arterial Interconnect Project

The Arterial Interconnect Project includes the maintenance and replacement of traffic signal interconnect cabling, modems and other related equipment used to facilitate communication between traffic signals and the Traffic Management Center (TMC). This project can be used to provide interconnect at new locations and establish communications with the TMC.

Monroe Rehabilitation – Lincoln Avenue to Arlington Avenue

This project provides for the asphalt concrete pavement rehabilitation of Monroe Street between Arlington Avenue and Lincoln Avenue. The project also includes removal and replacement of non-compliant pedestrian ramps and damaged curbs, gutters, cross-gutters, driveways and sidewalks adjacent to the street to provide proper drainage and ADA compliance.

Mission Boulevard Bridge Replacement at Santa Ana River

This project provides for the reconstruction of the Mission Bridge spanning over 1,100 feet across the Santa Ana River between the cities of Riverside and Jurupa Valley. The new bridge will be constructed along the same alignment as the existing bridge but will be wider than the existing bridge allowing for bike lanes and a sidewalk for pedestrian use. The project is being led by the County of Riverside and the City of Riverside will only be responsible to provide its fair share contribution to satisfy the local match requirements.

Key Revenues and Funding Sources

Table 1: Funding Sources

Fund	Funding Source	Proposed 2018/19	Proposed 2019/20	Proposed 2020/21	Proposed 2021/22	Proposed 2022/23	Total
230	Gas Tax	9,961,724	9,751,724	9,328,366	9,328,366	9,328,366	$47,698,546
420	Measure Z Capital	2,875,000	2,875,000	2,875,000	2,875,000	2,875,000	$14,375,000
432	Measure A	3,950,000	3,465,000	3,465,000	3,115,000	2,965,000	$16,960,000
433	Transportation DIF	1,560,000	-	-	-	-	$1,560,000
	TOTAL	**$18,346,724**	**$16,091,724**	**$15,668,366**	**$15,318,366**	**$15,168,366**	**$80,593,546**

State Gas Tax, Local Measure A, and City Development Impact fees are the primary sources of revenues for the projects. Additional rehabilitation and safety funds will be generated with the City's Measure Z sales tax revenues and California's Senate Bill 1 Rehabilitation Gas Tax Revenues.

Project Category Overview: Transportation

Furthermore, the City issued certificates of participation (COP) in 2013 that provided funding for a backlog of street paving projects. The COP debt will be repaid in future years from local transportation funds. The debt service obligation will reduce available funds for transportation projects by $3 million per year for the twenty-year repayment term.

Projects by Major Type of Improvement

Table 2: Schedule of Projects by Major Type of Improvement

Project Type/Project Name	Proposed 2018/19	Proposed 2019/20	Proposed 2020/21	Proposed 2021/22	Proposed 2022/23	Total
Bicycle/Pedestrian						
Pedestrian Ramps Program	300,000	300,000	300,000	300,000	300,000	$1,500,000
Sidewalk Repair Program	300,000	300,000	300,000	300,000	300,000	$1,500,000
Sidewalk/Trail Construction at Various Locations Program	300,000	300,000	300,000	300,000	300,000	$1,500,000
Total Bicycle/Pedestrian	**$900,000**	**$900,000**	**$900,000**	**$900,000**	**$900,000**	**$4,500,000**
Bridge						
Market Street Bridge Replacement Over the Santa Ana River	-	-	250,000	150,000	-	$400,000
Mission Boulevard Bridge Replacement at Santa Ana River	100,000	500,000	250,000	-	-	$850,000
Total Bridge	**$100,000**	**$500,000**	**$500,000**	**$150,000**	**$0**	**$1,250,000**
New Streets						
Adams Street/State Route 91 Interchange Improvements	500,000	500,000	-	-	-	$1,000,000
Canyon Crest Widening-Via Vista Dr. to Country Club Dr.	560,000	-	-	-	-	$560,000
Iowa Avenue Widening - Martin Luther King to University	1,000,000	-	-	-	-	$1,000,000
Total New Streets	**$2,060,000**	**$500,000**	**$0**	**$0**	**$0**	**$2,560,000**
Street Maintenance						
CDBG Matching Funds	150,000	150,000	150,000	150,000	150,000	$750,000
Curb and Gutter Repair Program	200,000	200,000	200,000	200,000	200,000	$1,000,000
Major Streets Rehabilitation	2,400,000	2,400,000	2,400,000	2,400,000	2,400,000	$12,000,000
Measure Z Pavement Rehabilitation and Pedestrian Facilities Improvement Program	2,875,000	2,875,000	2,875,000	2,875,000	2,875,000	$14,375,000
Minor Street Preservation (Slurry/Aram) Program	500,000	500,000	500,000	500,000	500,000	$2,500,000
Minor Street Rehabilitation Program	1,500,000	1,500,000	1,500,000	1,500,000	1,500,000	$7,500,000
Miscellaneous Street Construction Program	500,000	500,000	500,000	500,000	500,000	$2,500,000
SB-1 Pavement Rehabilitation, Maintenance, and Safety Improvements Program	5,426,724	5,426,724	5,503,366	5,503,366	5,503,366	$27,363,546
Total Street Maintenance	**$13,551,724**	**$13,551,724**	**$13,628,366**	**$13,628,366**	**$13,628,366**	**$67,988,546**
Traffic Improvements						
Active Transportation Master Plan	200,000	-	-	-	-	$200,000
Interconnected Traffic Signal Controller Replacement	560,000	-	-	-	-	$560,000
Miscellaneous Traffic Projects Program	75,000	75,000	75,000	75,000	75,000	$375,000
Total Traffic Improvements	**$835,000**	**$75,000**	**$75,000**	**$75,000**	**$75,000**	**$1,135,000**

Project Category Overview: Transportation

Project Type/Project Name	Proposed 2018/19	Proposed 2019/20	Proposed 2020/21	Proposed 2021/22	Proposed 2022/23	Total
Traffic Signal Interconnections						
Arterial Interconnect Project Program	40,000	40,000	40,000	40,000	40,000	$200,000
Traffic Management Center Program	50,000	50,000	50,000	50,000	50,000	$250,000
Total Traffic Signal Interconnections	**$90,000**	**$90,000**	**$90,000**	**$90,000**	**$90,000**	**$450,000**
Traffic Signal Maintenance						
Controller Assembly Replacement Program	70,000	70,000	70,000	70,000	70,000	$350,000
LED Signal Lenses Replacement Program	20,000	20,000	20,000	20,000	20,000	$100,000
Spread Spectrum Radio Replacement Program	10,000	10,000	10,000	10,000	10,000	$50,000
Traffic Signal Loop Replacement Program	25,000	25,000	25,000	25,000	25,000	$125,000
Total Traffic Signal Maintenance	**$125,000**	**$125,000**	**$125,000**	**$125,000**	**$125,000**	**$625,000**
Traffic Signal Modifications						
Miscellaneous Signal Revisions Program	100,000	100,000	100,000	100,000	100,000	$500,000
Total Traffic Signal Modifications	**$100,000**	**$100,000**	**$100,000**	**$100,000**	**$100,000**	**$500,000**
New Traffic Signals						
New Traffic Signals (Prioritized Locations-One Per Year) Program	250,000	250,000	250,000	250,000	250,000	$1,250,000
Total New Traffic Signals	**$250,000**	**$250,000**	**$250,000**	**$250,000**	**$250,000**	**$1,250,000**
Other Projects						
Indian Hill Road Slope Mitigation Project	210,000	-	-	-	-	$210,000
San Andreas/Glenwood Drainage And Site Improvement Project	125,000	-	-	-	-	$125,000
Total Other Projects	**$335,000**	**$0**	**$0**	**$0**	**$0**	**$335,000**
TOTAL	**$18,346,724**	**$16,091,724**	**$15,668,366**	**$15,318,366**	**$15,168,366**	**$80,593,546**

Unfunded Projects

Table 3: Top Ten Unfunded Projects by Priority

Project Name	Estimated Project Cost	Unfunded Amount
1. Adams Street/State Route 91 Interchange Improvements	72,900,000	66,635,000
2. Van Buren Widening, Indiana to South City Limit	26,640,352	26,640,352
3. Tyler/State Route 91 Interchange Improvements	75,000,000	75,000,000
4. Canyon Crest Widening-Via Vista Dr. to Country Club Dr.	8,104,673	2,000,000
5. Arlington Avenue at Chadbourne Avenue Traffic Signal	325,000	325,000
6. University Avenue Fiber Optic	450,000	450,000
7. 14Th Street Widening, SR 91 to Martin Luther King	24,000,000	24,000,000
8. Citywide Striping Removal	70,000	70,000
9. Battery Backup Maintenance	40,000	40,000
10. Miscellaneous Signal Cabinet Replacement	225,000	225,000
TOTAL	**$207,755,025**	**$195,385,352**

Project Category Overview: Transportation

Project Map

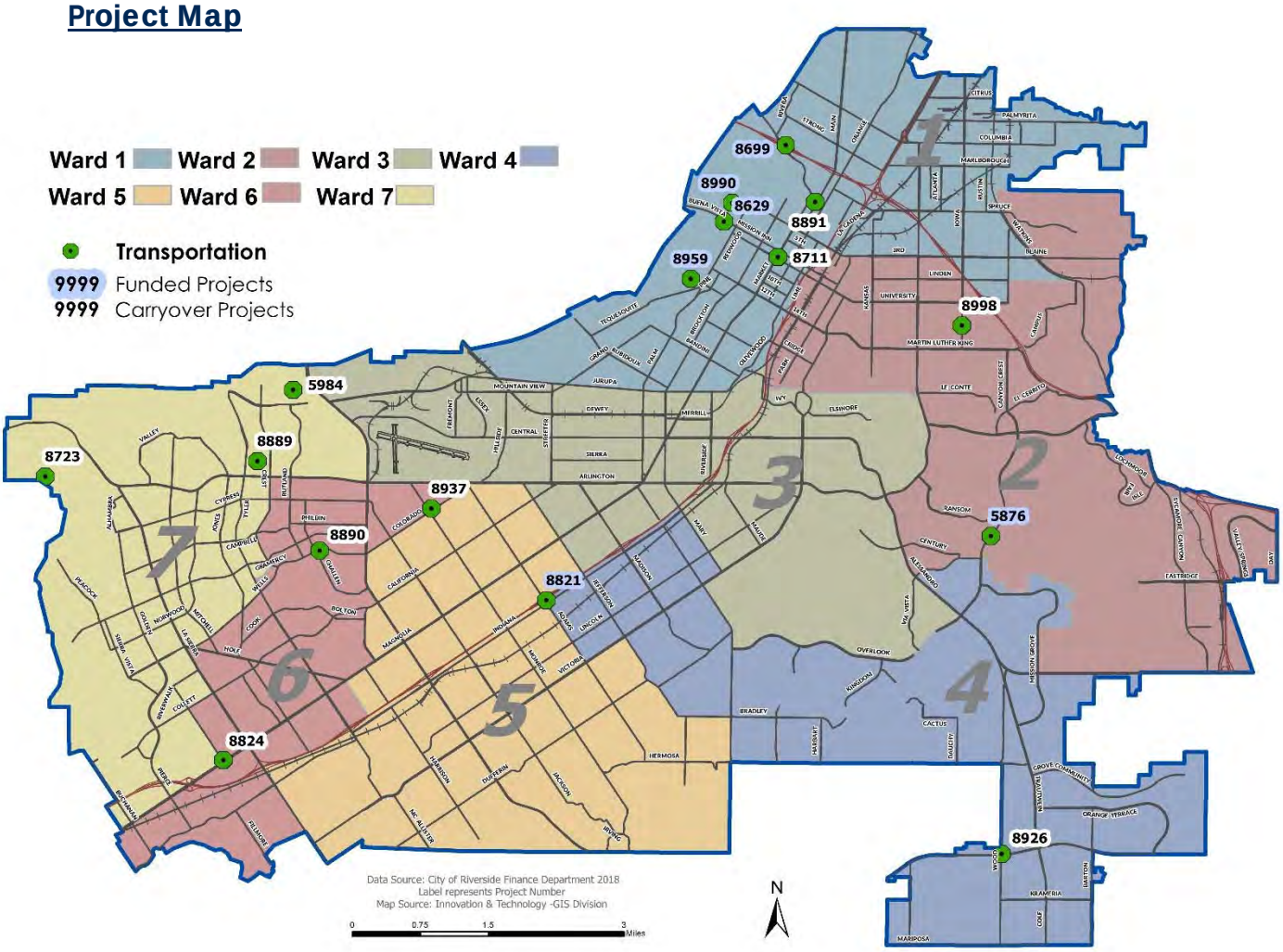

Note: This map includes all active and new capital improvement projects. Ongoing and citywide projects are not included on the map. To view additional information and detailed maps, please visit the City's website at https://riverside.openbook.questica.com.

Graph 1: Distribution by Ward

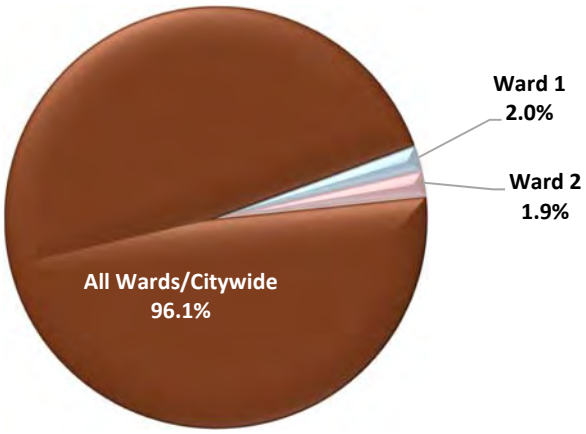

Ward	Five-Year Total
Ward 1	1,835,000
Ward 2	1,560,000
Ward 3	-
Ward 4	-
Ward 5	-
Ward 6	-
Ward 7	-
All Wards	77,198,546
Total	**$80,593,546**

NOTES

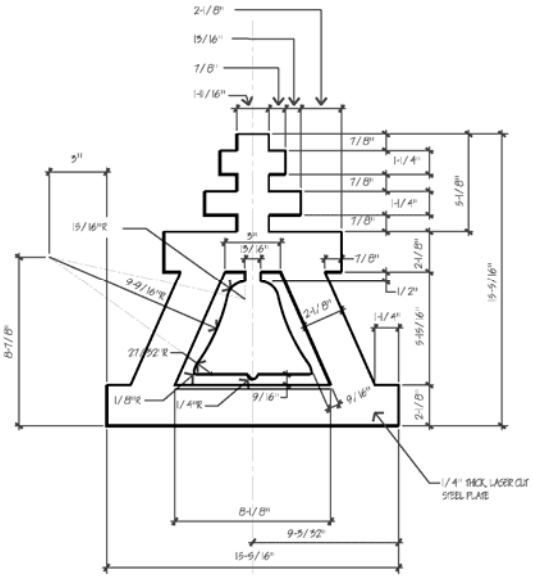
2-1/8"
15/16"
7/8"
1-11/16"
3"
15/16"R
9-9/16"R
8-7/8"
27-52"R
1/8"R
1/4"R
9/16"
9/16"
7/8"
1-1/4"
7/8"
1-1/4"
7/8"
5-1/8"
15/16"
7/8"
2-1/8"
1/2"
2-1/8"
1-1/4"
5-15/16"
2-1/8"
15-9/16"
1/4" THICK, LASER CUT STEEL PLATE
8-1/8"
9-5/32"
15-9/16"

PRIORITIZATION CATEGORIES

- ☒ Risk to Health, Safety and Environment
- ☒ Regulatory or Mandated Requirements
- ☒ Asset Condition, Annual Recurring Costs and Asset Longevity
- ☐ Community Investment and Economic Prosperity
- ☒ Level and Quality of Service
- ☐ Sustainability and Conservation
- ☒ Funding Availability
- ☒ Project Readiness
- ☒ Multiple Category Benefit and Bundling Opportunities

NEW OR EXISTING

- ☒ New Infrastructure / Facility
- ☒ Existing Infrastructure / Facility

MISC STREET CONSTRUCTION PROGRAM

PROJECT NUMBER 5070
COUNCIL WARD All Wards
PROJECT CATEGORY Transportation
PROJECT LOCATION Citywide

PROJECT DESCRIPTION
City funds are allocated for work on various projects, issues, and concerns that present themselves during the year. These projects include removal and replacement of non-compliant pedestrian ramps as well as damaged curbs, gutters, cross-gutters, driveways and sidewalks adjacent to the street in order to provide proper drainage and remain in compliance with the Americans With Disability Act (ADA).

PROJECT STATUS
This is an ongoing maintenance project used year-round to replace pedestrian ramps, curbs, gutters, cross-gutters, driveways, and sidewalks.

OPERATING BUDGET IMPACT
This is an ongoing project to maintain the City's sidewalks, curbs, gutters, driveways, cross-gutters, and pedestrian ramps. There are no operating budget impacts associated with this ongoing project.

PROJECT FUNDING OVERVIEW

Total Project Cost	Prior Years Funding	Five Year Plan	REMAINING NEEDED
Ongoing	$2,028,129	$2,500,000	Ongoing

PROPOSED 2-YEAR BUDGET AND 5-YEAR PLAN

Fund	Funding Source	2018/19	2019/20	2020/21	2021/22	2022/23	TOTAL
230	Gas Tax	$500,000	$500,000	$500,000	$500,000	$500,000	$2,500,000
	TOTAL	$500,000	$500,000	$500,000	$500,000	$500,000	$2,500,000

PRIORITIZATION CATEGORIES

- ☒ Risk to Health, Safety and Environment
- ☒ Regulatory or Mandated Requirements
- ☒ Asset Condition, Annual Recurring Costs and Asset Longevity
- ☐ Community Investment and Economic Prosperity
- ☒ Level and Quality of Service
- ☐ Sustainability and Conservation
- ☒ Funding Availability
- ☒ Project Readiness
- ☒ Multiple Category Benefit and Bundling Opportunities

NEW OR EXISTING

- ☐ New Infrastructure / Facility
- ☒ Existing Infrastructure / Facility

CONTROLLER ASSEMBLY REPLACEMENT

PROJECT NUMBER 5183
COUNCIL WARD All Wards
PROJECT CATEGORY Transportation
PROJECT LOCATION Citywide

PROJECT DESCRIPTION
The Traffic Signal Maintenance Crew performs regular maintenance on 375 traffic signal controllers. They most frequently respond to locations where the signal cabinet has been struck by a vehicle.

PROJECT STATUS
This is an ongoing project for the replacement of traffic signal cabinets due to unexpected knock downs and the replacement of old cabinets with newer models that are more compatible with new signal equipment.

OPERATING BUDGET IMPACT
This is an ongoing project to replace traffic signal cabinets in order to keep traffic signals throughout the City functional. There are no operating budget impacts associated with this ongoing project.

PROJECT FUNDING OVERVIEW

Total Project Cost	Prior Years Funding	Five Year Plan	REMAINING NEEDED
Ongoing	$210,301	$350,000	Ongoing

PROPOSED 2-YEAR BUDGET AND 5-YEAR PLAN

Fund	Funding Source	2018/19	2019/20	2020/21	2021/22	2022/23	TOTAL
432	Measure A	$70,000	$70,000	$70,000	$70,000	$70,000	$350,000
	TOTAL	$70,000	$70,000	$70,000	$70,000	$70,000	$350,000

PRIORITIZATION CATEGORIES

- ☒ Risk to Health, Safety and Environment
- ☐ Regulatory or Mandated Requirements
- ☐ Asset Condition, Annual Recurring Costs and Asset Longevity
- ☐ Community Investment and Economic Prosperity
- ☒ Level and Quality of Service
- ☐ Sustainability and Conservation
- ☒ Funding Availability
- ☒ Project Readiness
- ☒ Multiple Category Benefit and Bundling Opportunities

NEW OR EXISTING

- ☐ New Infrastructure / Facility
- ☒ Existing Infrastructure / Facility

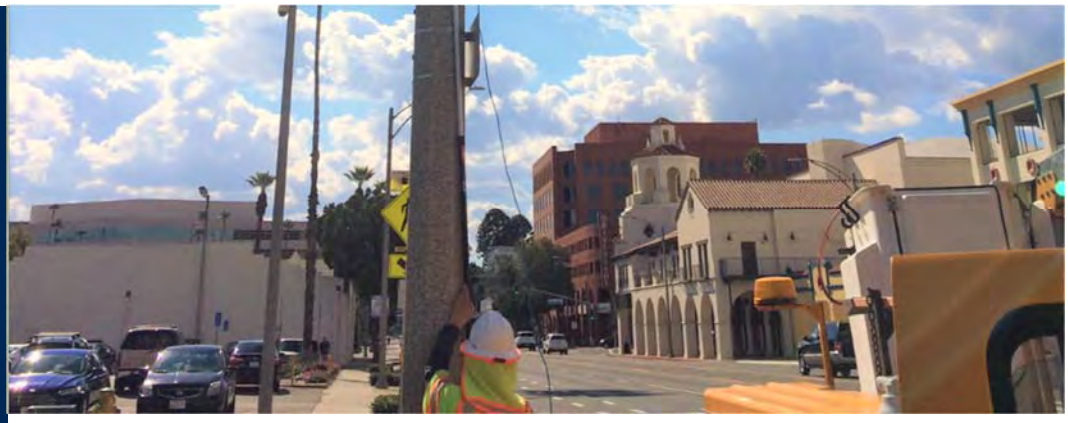

SPREAD SPECTRUM RADIO REPLACEMENT

PROJECT NUMBER 5846
COUNCIL WARD All Wards
PROJECT CATEGORY Transportation
PROJECT LOCATION Citywide

PROJECT DESCRIPTION
This is a recurring project of the Traffic Management Center (TMC) to upgrade or replace traffic signal radios and related components for communication with the City's 375 signalized intersections.

PROJECT STATUS
This is an ongoing maintenance project used year-round to replace existing and install new radios for communication between signals and the Traffic Management Center.

OPERATING BUDGET IMPACT
The installation of the cameras will result in a net decrease in overall operating budget impacts because minor maintenance and timing adjustments can be completed throughout the City from the Traffic Management Center.

PROJECT FUNDING OVERVIEW

Total Project Cost	Prior Years Funding	Five Year Plan	REMAINING NEEDED
Ongoing	$46,640	$50,000	Ongoing

PROPOSED 2-YEAR BUDGET AND 5-YEAR PLAN

Fund	Funding Source	2018/19	2019/20	2020/21	2021/22	2022/23	TOTAL
432	Measure A	$10,000	$10,000	$10,000	$10,000	$10,000	$50,000
	TOTAL	$10,000	$10,000	$10,000	$10,000	$10,000	$50,000

PRIORITIZATION CATEGORIES

- ☒ Risk to Health, Safety and Environment
- ☐ Regulatory or Mandated Requirements
- ☒ Asset Condition, Annual Recurring Costs and Asset Longevity
- ☐ Community Investment and Economic Prosperity
- ☒ Level and Quality of Service
- ☐ Sustainability and Conservation
- ☒ Funding Availability
- ☒ Project Readiness
- ☒ Multiple Category Benefit and Bundling Opportunities

NEW OR EXISTING

- ☐ New Infrastructure / Facility
- ☒ Existing Infrastructure / Facility

TRAFFIC SIGNAL LOOP REPLACEMENT PROGRAM

PROJECT NUMBER 5847 **COUNCIL WARD** All Wards
PROJECT CATEGORY Transportation
PROJECT LOCATION All signalized intersections citywide

PROJECT DESCRIPTION
This program is to replace faulty or damaged traffic signal loop detectors throughout the City. The City maintains an on-call contract with Smithson Electric for this work.

PROJECT STATUS
This is an ongoing maintenance project used year-round to replace damaged and/or faulty loop detectors.

OPERATING BUDGET IMPACT
This is an ongoing project to replace damaged or faulty loop detectors. There are no operating budget impacts associated with this ongoing project.

PROJECT FUNDING OVERVIEW

Total Project Cost	Prior Years Funding	Five Year Plan	REMAINING NEEDED
Ongoing	$105,313	$125,000	Ongoing

PROPOSED 2-YEAR BUDGET AND 5-YEAR PLAN

Fund	Funding Source	2018/19	2019/20	2020/21	2021/22	2022/23	TOTAL
432	Measure A	$25,000	$25,000	$25,000	$25,000	$25,000	$125,000
	TOTAL	$25,000	$25,000	$25,000	$25,000	$25,000	$125,000

PRIORITIZATION CATEGORIES

- ☒ Risk to Health, Safety and Environment
- ☐ Regulatory or Mandated Requirements
- ☒ Asset Condition, Annual Recurring Costs and Asset Longevity
- ☐ Community Investment and Economic Prosperity
- ☒ Level and Quality of Service
- ☐ Sustainability and Conservation
- ☒ Funding Availability
- ☒ Project Readiness
- ☒ Multiple Category Benefit and Bundling Opportunities

NEW OR EXISTING

- ☒ New Infrastructure / Facility
- ☒ Existing Infrastructure / Facility

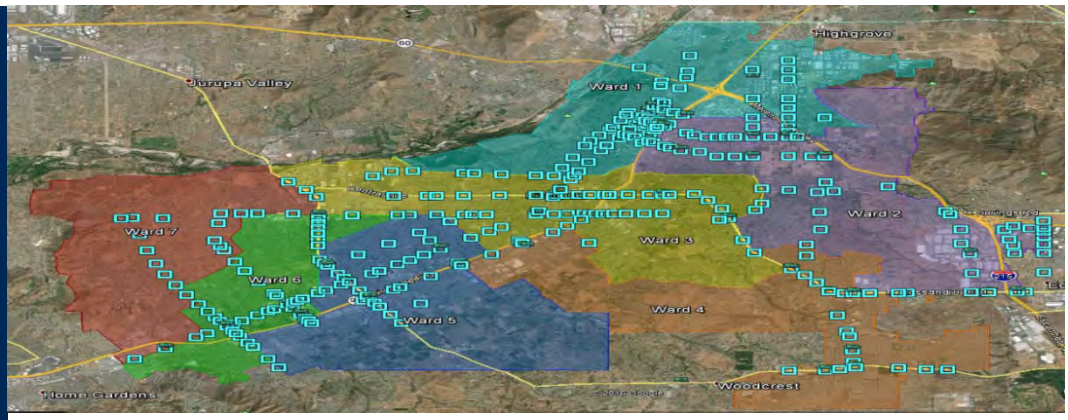

MISCELLANEOUS SIGNAL REVISIONS PROGRAM

PROJECT NUMBER 5861
COUNCIL WARD All Wards
PROJECT CATEGORY Transportation
PROJECT LOCATION Citywide

PROJECT DESCRIPTION
This is a recurring project to complete traffic signal modifications, rewire aging conductors, and upgrade signals throughout the City.

PROJECT STATUS
This is an on-going maintenance project used year round to install enhancements to signalized intersections to improve vehicular and pedestrian mobility.

OPERATING BUDGET IMPACT
This is an on-going project to improve traffic signals throughout the City. There are no operating budget impacts associated with the completion of this project.

PROJECT FUNDING OVERVIEW

Total Project Cost	Prior Years Funding	Five Year Plan	REMAINING NEEDED
Ongoing	$1,748,764	$500,000	Ongoing

PROPOSED 2-YEAR BUDGET AND 5-YEAR PLAN

Fund	Funding Source	2018/19	2019/20	2020/21	2021/22	2022/23	TOTAL
432	Measure A	$100,000	$100,000	$100,000	$100,000	$100,000	$500,000
	TOTAL	$100,000	$100,000	$100,000	$100,000	$100,000	$500,000

PRIORITIZATION CATEGORIES

- ☒ Risk to Health, Safety and Environment
- ☐ Regulatory or Mandated Requirements
- ☐ Asset Condition, Annual Recurring Costs and Asset Longevity
- ☐ Community Investment and Economic Prosperity
- ☒ Level and Quality of Service
- ☐ Sustainability and Conservation
- ☒ Funding Availability
- ☒ Project Readiness
- ☒ Multiple Category Benefit and Bundling Opportunities

NEW OR EXISTING

- ☒ New Infrastructure / Facility
- ☒ Existing Infrastructure / Facility

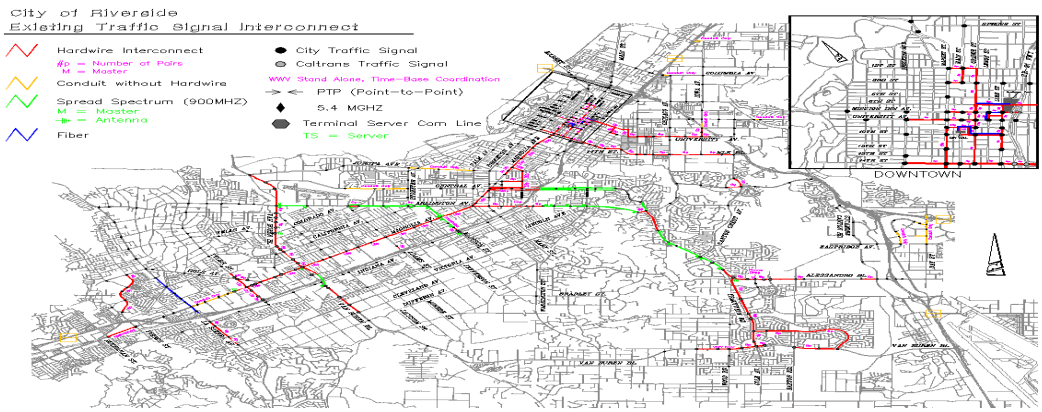

ARTERIAL INTERCONNECT PROGRAM

PROJECT NUMBER	5862	**COUNCIL WARD**	All Wards
PROJECT CATEGORY	Transportation		
PROJECT LOCATION	Citywide		

PROJECT DESCRIPTION

Maintenance and replacement of traffic signal interconnect cabling, modems and other related equipment used to facilitate communication between traffic signals and the Traffic Management Center (TMC). This project can be used to provide interconnect at new locations and establish communications with the TMC. The City has approximately 150 traffic signals making use of traditional arterial interconnect to communicate with the TMC. Interconnect is used along major roadways such as Magnolia Avenue, Tyler Street, La Sierra Avenue, Victoria Avenue, Van Buren Boulevard, Alessandro Boulevard, Central Avenue, Fourteenth Street, and University Avenue, along with locations on intersecting roadways.

PROJECT STATUS

This is an on-going project for the maintenance and replacement of traffic signal interconnect components.

OPERATING BUDGET IMPACT

This is an ongoing project to maintain the traffic signal interconnect system. There are no operating budget impacts associated with this ongoing project.

PROJECT FUNDING OVERVIEW

Total Project Cost	Prior Years Funding	Five Year Plan	REMAINING NEEDED
Ongoing	$290,488	$200,000	Ongoing

PROPOSED 2-YEAR BUDGET AND 5-YEAR PLAN

Fund	Funding Source	2018/19	2019/20	2020/21	2021/22	2022/23	TOTAL
432	Measure A	$40,000	$40,000	$40,000	$40,000	$40,000	$200,000
	TOTAL	**$40,000**	**$40,000**	**$40,000**	**$40,000**	**$40,000**	**$200,000**

PRIORITIZATION CATEGORIES

- ☒ Risk to Health, Safety and Environment
- ☐ Regulatory or Mandated Requirements
- ☐ Asset Condition, Annual Recurring Costs and Asset Longevity
- ☐ Community Investment and Economic Prosperity
- ☐ Level and Quality of Service
- ☐ Sustainability and Conservation
- ☐ Funding Availability
- ☐ Project Readiness
- ☐ Multiple Category Benefit and Bundling Opportunities

NEW OR EXISTING

- ☒ New Infrastructure / Facility
- ☒ Existing Infrastructure / Facility

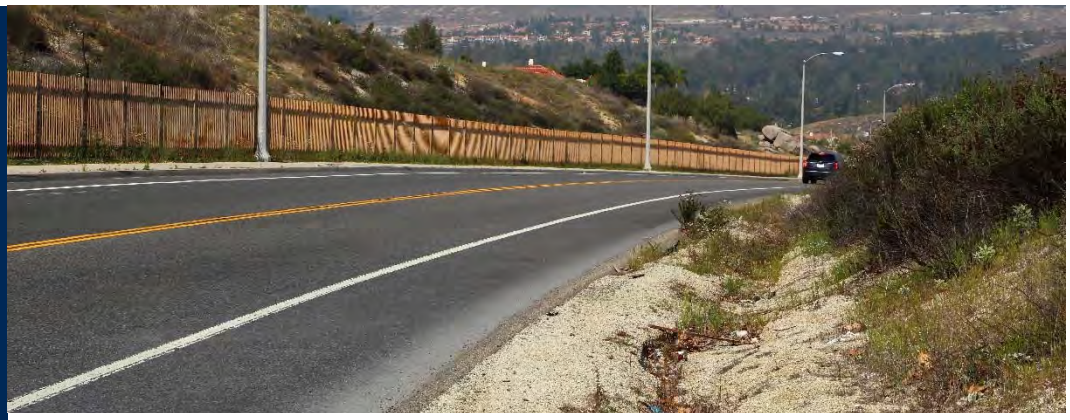

CANYON CREST WIDENING

PROJECT NUMBER 5876 **COUNCIL WARD** 2
PROJECT CATEGORY Transportation
PROJECT LOCATION Canyon Crest Dr. between Via Vista & Country Club

PROJECT DESCRIPTION
This project provides for the construction of street widening improvements on the eastern side of Canyon Crest Drive between Via Vista Drive and Country Club Drive. This project will provide two travel lanes and two bike lanes in each direction, as well as provide asphalt resurfacing improvements for the existing pavement. The improvements generally include new concrete curb, gutter, and sidewalk on the eastern side along with new drought tolerant landscaped medians.

PROJECT STATUS
The project is currently on hold due to the adjacent developer no longer being committed to the project. The adjacent development was to dedicate the necessary right-of-way in exchange for the City constructing the street improvements. The City only has funds available for the street improvement and not for acquiring right-of-way. Additionally, environmental permits will need to be obtained.

OPERATING BUDGET IMPACT
There are no anticipated operating budget impacts associated with the completion of this project.

PROJECT FUNDING OVERVIEW

Total Project Cost	Prior Years Funding	Five Year Plan	REMAINING NEEDED
$8,104,673	$5,544,673	$560,000	**$2,000,000**

PROPOSED 2-YEAR BUDGET AND 5-YEAR PLAN

Fund	Funding Source	2018/19	2019/20	2020/21	2021/22	2022/23	TOTAL
433	Transportation DIF	$560,000	-	-	-	-	$560,000
	TOTAL	**$560,000**	**$0**	**$0**	**$0**	**$0**	**$560,000**

PRIORITIZATION CATEGORIES

- ☒ Risk to Health, Safety and Environment
- ☐ Regulatory or Mandated Requirements
- ☐ Asset Condition, Annual Recurring Costs and Asset Longevity
- ☐ Community Investment and Economic Prosperity
- ☒ Level and Quality of Service
- ☐ Sustainability and Conservation
- ☒ Funding Availability
- ☒ Project Readiness
- ☒ Multiple Category Benefit and Bundling Opportunities

NEW OR EXISTING

- ☒ New Infrastructure / Facility
- ☒ Existing Infrastructure / Facility

TRAFFIC MANAGEMENT CENTER

PROJECT NUMBER 5931 **COUNCIL WARD** 1
PROJECT CATEGORY Transportation
PROJECT LOCATION City Hall 4th Floor, all signalized intersections

PROJECT DESCRIPTION
The Traffic Management Center (TMC) manages traffic operations throughout the City. It is the hub for the City's camera and connected traffic signal infrastructure. The project covers both equipment and staff time.

PROJECT STATUS
This is an ongoing project to monitor real-time traffic in order to refine and produce signal timing plans, improve vehicular mobility, and make necessary traffic signal timing adjustments based on observation of City streets via CCTV cameras.

OPERATING BUDGET IMPACT
There are no net operating budget impacts associated with this ongoing project.

PROJECT FUNDING OVERVIEW

Total Project Cost	Prior Years Funding	Five Year Plan	REMAINING NEEDED
Ongoing	$1,284,822	$250,000	Ongoing

PROPOSED 2-YEAR BUDGET AND 5-YEAR PLAN

Fund	Funding Source	2018/19	2019/20	2020/21	2021/22	2022/23	TOTAL
432	Measure A	$50,000	$50,000	$50,000	$50,000	$50,000	$250,000
	TOTAL	$50,000	$50,000	$50,000	$50,000	$50,000	$250,000

PRIORITIZATION CATEGORIES

- ☐ Risk to Health, Safety and Environment
- ☒ Regulatory or Mandated Requirements
- ☐ Asset Condition, Annual Recurring Costs and Asset Longevity
- ☐ Community Investment and Economic Prosperity
- ☐ Level and Quality of Service
- ☒ Sustainability and Conservation
- ☒ Funding Availability
- ☒ Project Readiness
- ☒ Multiple Category Benefit and Bundling Opportunities

NEW OR EXISTING

- ☐ New Infrastructure / Facility
- ☒ Existing Infrastructure / Facility

JURUPA AVENUE EXTENSION

PROJECT NUMBER 5984 **COUNCIL WARD** 7
PROJECT CATEGORY Transportation
PROJECT LOCATION Jurupa Ave from Van Buren Blvd to Rutland Ave

PROJECT DESCRIPTION
This project included the construction of the Jurupa Avenue Extension as a four lane divided arterial between Van Buren Boulevard to 610 feet westerly, and a two lane roadway across the former Hole Lake culvert to Rutland Avenue, with curb, gutter, and sidewalk, landscaped median and parkways, bike lanes, street lights, underground electrical facilities, and potable and reclaimed water lines. The project will also provide habitat mitigation services as required for the completion of the Jurupa Avenue Extension project completed in 2012. The services agreement will terminate when the restoration improvements have been installed and established, and the endowment paid to the Riverside-Corona Resource Conservation District (RCRCD) for perpetual maintenance.

PROJECT STATUS
The construction of this project has been completed. However, in September 2015, the City and RCRCD entered into a Services Agreement for the habitat mitigation services. RCRCD is responsible for restoring the habitat areas impacted by the completion of the project as well as preserving the restored areas in perpetuity. The anticipated completion date for the mitigation of this project is June 2023.

OPERATING BUDGET IMPACT
There are no operating budget impacts associated with the completion of this project.

PROJECT FUNDING OVERVIEW

Total Project Cost	Prior Years Funding	Five Year Plan	REMAINING NEEDED
$6,172,572	$6,172,572	$0	$0

PROPOSED 2-YEAR BUDGET AND 5-YEAR PLAN

Fund	Funding Source	2018/19	2019/20	2020/21	2021/22	2022/23	TOTAL
		-	-	-	-	-	$0
	TOTAL	$0	$0	$0	$0	$0	$0

PRIORITIZATION CATEGORIES

- ☒ Risk to Health, Safety and Environment
- ☐ Regulatory or Mandated Requirements
- ☒ Asset Condition, Annual Recurring Costs and Asset Longevity
- ☐ Community Investment and Economic Prosperity
- ☒ Level and Quality of Service
- ☐ Sustainability and Conservation
- ☒ Funding Availability
- ☒ Project Readiness
- ☒ Multiple Category Benefit and Bundling Opportunities

NEW OR EXISTING

- ☒ New Infrastructure / Facility
- ☐ Existing Infrastructure / Facility

NEW TRAFFIC SIGNALS PROGRAM

PROJECT NUMBER	8341	**COUNCIL WARD**	All Wards
PROJECT CATEGORY	Transportation		
PROJECT LOCATION	Citywide		

PROJECT DESCRIPTION
The City of Riverside Traffic Division maintains a priority list for the installation of new traffic signals. The City has identified locations that would benefit from the installation of traffic signals, and uses the priority list as a means to equitably schedule the funding of new signal installations.

PROJECT STATUS
This is an ongoing project for the installation of new traffic signals. The City of Riverside Traffic Division is planning to install a traffic signal at the intersection of Cole Ave and Krameria Ave (subject to change) which is currently an all-way stop controlled intersection.

OPERATING BUDGET IMPACT
The operating budget impact of a new traffic signal is approximately $3,000 per year for each signal.

PROJECT FUNDING OVERVIEW

Total Project Cost	Prior Years Funding	Five Year Plan	REMAINING NEEDED
Ongoing	$465,264	$1,250,000	Ongoing

PROPOSED 2-YEAR BUDGET AND 5-YEAR PLAN

Fund	Funding Source	2018/19	2019/20	2020/21	2021/22	2022/23	TOTAL
432	Measure A	$250,000	$250,000	$250,000	$250,000	$250,000	$1,250,000
	TOTAL	**$250,000**	**$250,000**	**$250,000**	**$250,000**	**$250,000**	**$1,250,000**

PRIORITIZATION CATEGORIES

- ☒ Risk to Health, Safety and Environment
- ☐ Regulatory or Mandated Requirements
- ☒ Asset Condition, Annual Recurring Costs and Asset Longevity
- ☐ Community Investment and Economic Prosperity
- ☒ Level and Quality of Service
- ☐ Sustainability and Conservation
- ☒ Funding Availability
- ☒ Project Readiness
- ☒ Multiple Category Benefit and Bundling Opportunities

NEW OR EXISTING

- ☐ New Infrastructure / Facility
- ☒ Existing Infrastructure / Facility

LED SIGNAL LENSES REPLACEMENT PROGRAM

PROJECT NUMBER 8619 **COUNCIL WARD** All Wards
PROJECT CATEGORY Transportation
PROJECT LOCATION All signalized intersections citywide

PROJECT DESCRIPTION
This is an ongoing project to perform regular maintenance of the 400 traffic signals to ensure that the LED signal lenses are in working order.

PROJECT STATUS
This is an ongoing project to replace LED lenses as part of regular maintenance or that have been physically damaged.

OPERATING BUDGET IMPACT
There are no operating budget impacts associated with this project.

PROJECT FUNDING OVERVIEW

Total Project Cost	Prior Years Funding	Five Year Plan	REMAINING NEEDED
Ongoing	$40,000	$100,000	Ongoing

PROPOSED 2-YEAR BUDGET AND 5-YEAR PLAN

Fund	Funding Source	2018/19	2019/20	2020/21	2021/22	2022/23	TOTAL
432	Measure A	$20,000	$20,000	$20,000	$20,000	$20,000	$100,000
	TOTAL	$20,000	$20,000	$20,000	$20,000	$20,000	$100,000

PRIORITIZATION CATEGORIES

- ☒ Risk to Health, Safety and Environment
- ☐ Regulatory or Mandated Requirements
- ☒ Asset Condition, Annual Recurring Costs and Asset Longevity
- ☐ Community Investment and Economic Prosperity
- ☒ Level and Quality of Service
- ☐ Sustainability and Conservation
- ☒ Funding Availability
- ☒ Project Readiness
- ☒ Multiple Category Benefit and Bundling Opportunities

NEW OR EXISTING

- ☒ New Infrastructure / Facility
- ☐ Existing Infrastructure / Facility

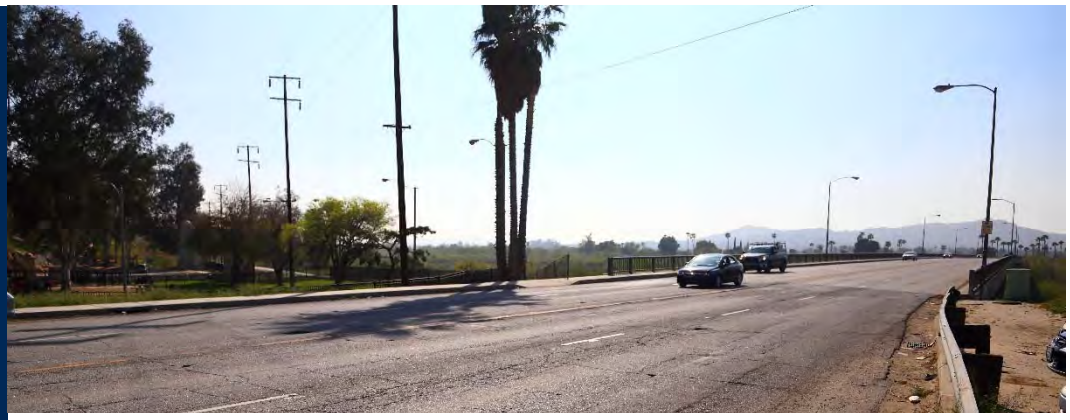

MISSION BOULEVARD BRIDGE REPLACEMENT AT SANTA ANA RIVER

PROJECT NUMBER 8629 **COUNCIL WARD** 1
PROJECT CATEGORY Transportation
PROJECT LOCATION Mission Boulevard Bridge over the Santa Ana River

PROJECT DESCRIPTION
This project provides for the reconstruction of the Mission Bridge spanning over 1,100 feet across the Santa Ana River between the cities of Riverside and Jurupa Valley. The new bridge will be constructed along the same alignment as the existing bridge but will be wider than the existing bridge allowing for bike lanes and a sidewalk for pedestrian use. The County of Riverside is taking the lead on this project and the City of Riverside will only be responsible to provide its fair share contribution to Riverside County in order to satisfy the local match requirements.

PROJECT STATUS
The County of Riverside is currently in the PA&ED phase which is scheduled for completion in late 2018. Construction is anticipated to be completed in 2023.

OPERATING BUDGET IMPACT
There are no additional operating impacts anticipated with the completion of this project.

PROJECT FUNDING OVERVIEW

Total Project Cost	Prior Years Funding	Five Year Plan	REMAINING NEEDED
$1,250,000	$400,000	$850,000	$0

PROPOSED 2-YEAR BUDGET AND 5-YEAR PLAN

Fund	Funding Source	2018/19	2019/20	2020/21	2021/22	2022/23	TOTAL
432	Measure A	$100,000	$500,000	$250,000	-	-	$850,000
	TOTAL	$100,000	$500,000	$250,000	$0	$0	$850,000

PRIORITIZATION CATEGORIES

- ☒ Risk to Health, Safety and Environment
- ☐ Regulatory or Mandated Requirements
- ☒ Asset Condition, Annual Recurring Costs and Asset Longevity
- ☐ Community Investment and Economic Prosperity
- ☒ Level and Quality of Service
- ☐ Sustainability and Conservation
- ☒ Funding Availability
- ☒ Project Readiness
- ☒ Multiple Category Benefit and Bundling Opportunities

NEW OR EXISTING

- ☒ New Infrastructure / Facility
- ☒ Existing Infrastructure / Facility

MARKET STREET BRIDGE REPLACEMENT OVER THE SANTA ANA RIVER

PROJECT NUMBER	8699	**COUNCIL WARD**	1
PROJECT CATEGORY	Transportation		
PROJECT LOCATION	Market Street Bridge Replacement over the Santa Ana River		

PROJECT DESCRIPTION

The existing Market Street Bridge over the Santa Ana River is an important transportation link between the Cities of Riverside and Jurupa Valley. This 12-span steel plate girder bridge is 1,195 feet long and was constructed in 1953. It will be replaced with a new 4 lane bridge including standard shoulders and a dedicated multi-purpose pedestrian lane. The County of Riverside is taking the lead on this project and the City of Riverside will only be responsible to provide its fair share contribution to Riverside County in order to satisfy the local match requirements.

PROJECT STATUS

The County of Rivers is currently in the PA&ED phase which is scheduled for completion in 2019. Construction is anticipated to be completed in 2024.

OPERATING BUDGET IMPACT

There are no additional operating impacts anticipated with the completion of this project.

PROJECT FUNDING OVERVIEW

Total Project Cost	Prior Years Funding	Five Year Plan	REMAINING NEEDED
$500,000	$100,000	$400,000	**$0**

PROPOSED 2-YEAR BUDGET AND 5-YEAR PLAN

Fund	Funding Source	2018/19	2019/20	2020/21	2021/22	2022/23	TOTAL
432	Measure A	-	-	$250,000	$150,000	-	$400,000
	TOTAL	**$0**	**$0**	**$250,000**	**$150,000**	**$0**	**$400,000**

PRIORITIZATION CATEGORIES

- ☒ Risk to Health, Safety and Environment
- ☐ Regulatory or Mandated Requirements
- ☐ Asset Condition, Annual Recurring Costs and Asset Longevity
- ☐ Community Investment and Economic Prosperity
- ☐ Level and Quality of Service
- ☐ Sustainability and Conservation
- ☐ Funding Availability
- ☐ Project Readiness
- ☐ Multiple Category Benefit and Bundling Opportunities

NEW OR EXISTING

- ☒ New Infrastructure / Facility
- ☒ Existing Infrastructure / Facility

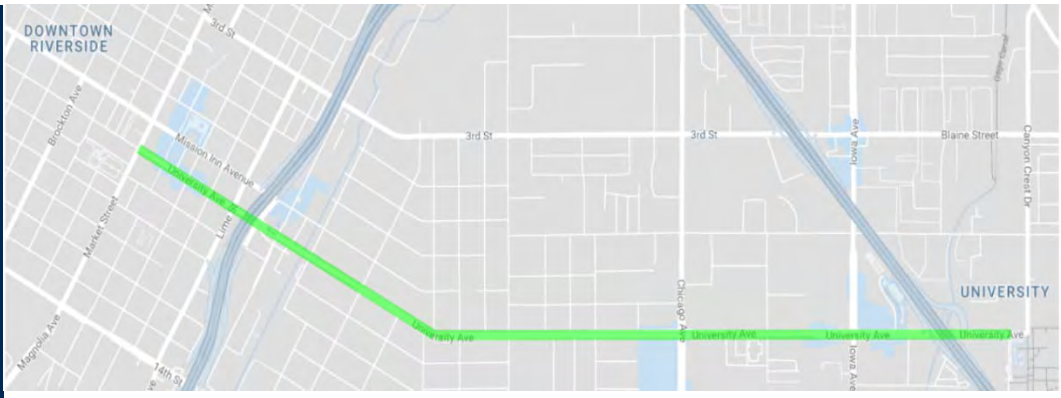

UNIVERSITY AVENUE FIBER OPTIC

PROJECT NUMBER	8711	**COUNCIL WARD**	1
PROJECT CATEGORY	Transportation		
PROJECT LOCATION	University Avenue between Market Street and W Campus Drive		

PROJECT DESCRIPTION
This project will install approximately 2.6 miles of fiber optic cabling to enable high-speed communications for the 16 traffic signals along University Avenue between Market Street (Downtown) and W Campus Drive (UCR).

PROJECT STATUS
The project will be designed internally and bid for construction in Fiscal Year 2018/19.

OPERATING BUDGET IMPACT
There are no anticipated operating budget impacts associated with the completed of this project.

PROJECT FUNDING OVERVIEW

Total Project Cost	Prior Years Funding	Five Year Plan	REMAINING NEEDED
$450,000	$50,000	$0	**$400,000**

PROPOSED 2-YEAR BUDGET AND 5-YEAR PLAN

Fund	Funding Source	2018/19	2019/20	2020/21	2021/22	2022/23	TOTAL
		-	-	-	-	-	$0
	TOTAL	**$0**	**$0**	**$0**	**$0**	**$0**	**$0**

PRIORITIZATION CATEGORIES

- ☒ Risk to Health, Safety and Environment
- ☐ Regulatory or Mandated Requirements
- ☐ Asset Condition, Annual Recurring Costs and Asset Longevity
- ☐ Community Investment and Economic Prosperity
- ☒ Level and Quality of Service
- ☐ Sustainability and Conservation
- ☒ Funding Availability
- ☒ Project Readiness
- ☒ Multiple Category Benefit and Bundling Opportunities

NEW OR EXISTING

- ☒ New Infrastructure / Facility
- ☒ Existing Infrastructure / Facility

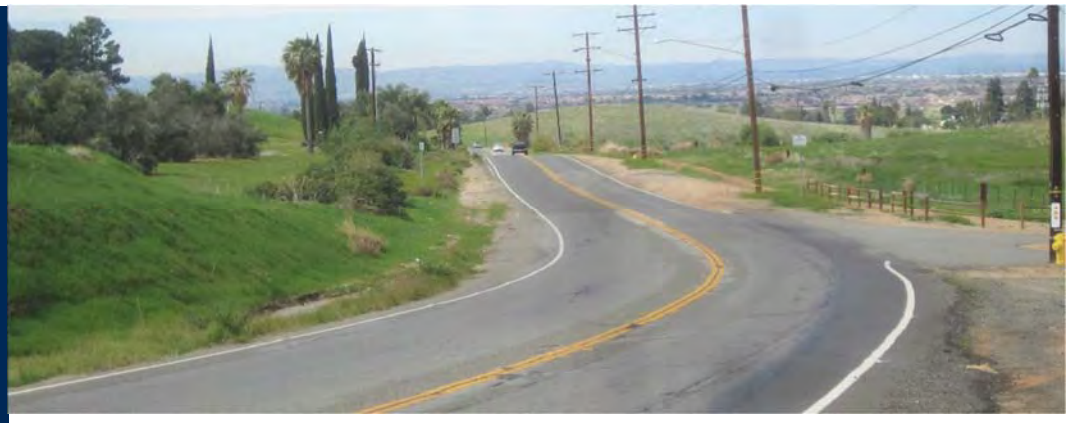

ARLINGTON AVENUE IMPROVEMENTS

PROJECT NUMBER	8723	**COUNCIL WARD**	7
PROJECT CATEGORY	Transportation		
PROJECT LOCATION	Arlington Avenue from Fairhaven Drive to Westerly City Limit		

PROJECT DESCRIPTION
The project proposes to pave the existing dirt shoulders, overlay the existing asphalt concrete, install street lights, install guardrails, and pavement striping to add left/right turn pockets and lessen the curvature of the road.

PROJECT STATUS
The project is currently under construction and is anticipated to be completed by August 2018.

OPERATING BUDGET IMPACT
There are no additional operating impacts anticipated with the completion of this project.

PROJECT FUNDING OVERVIEW

Total Project Cost	Prior Years Funding	Five Year Plan	REMAINING NEEDED
$1,313,000	$1,313,000	$0	**$0**

PROPOSED 2-YEAR BUDGET AND 5-YEAR PLAN

Fund	Funding Source	2018/19	2019/20	2020/21	2021/22	2022/23	TOTAL
		-	-	-	-	-	$0
	TOTAL	**$0**	**$0**	**$0**	**$0**	**$0**	**$0**

PRIORITIZATION CATEGORIES

- ☒ Risk to Health, Safety and Environment
- ☐ Regulatory or Mandated Requirements
- ☐ Asset Condition, Annual Recurring Costs and Asset Longevity
- ☐ Community Investment and Economic Prosperity
- ☒ Level and Quality of Service
- ☐ Sustainability and Conservation
- ☒ Funding Availability
- ☒ Project Readiness
- ☒ Multiple Category Benefit and Bundling Opportunities

NEW OR EXISTING

- ☒ New Infrastructure / Facility
- ☒ Existing Infrastructure / Facility

ADAMS STREET/STATE ROUTE 91 INTERCHANGE IMPROVEMENTS

PROJECT NUMBER	8821	**COUNCIL WARD**	3, 4, 5
PROJECT CATEGORY	Transportation		
PROJECT LOCATION	Adams Street at the SR-91		

PROJECT DESCRIPTION
This project includes the reconfiguration of Adams Street interchange at the SR-91 to reduce traffic congestion.

PROJECT STATUS
The project is currently in its PSR-PDS phase, which is anticipated to be completed in March 2018. The next phase is Project Approval and Environmental Document (PA & ED), which is scheduled to be started in summer/fall 2018.

OPERATING BUDGET IMPACT
There are no operating budget impacts associated with the completion of this project.

PROJECT FUNDING OVERVIEW

Total Project Cost	Prior Years Funding	Five Year Plan	REMAINING NEEDED
$72,900,000	$5,265,000	$1,000,000	**$66,635,000**

PROPOSED 2-YEAR BUDGET AND 5-YEAR PLAN

Fund	Funding Source	2018/19	2019/20	2020/21	2021/22	2022/23	TOTAL
230	Gas Tax	$500,000	$500,000	-	-	-	$1,000,000
	TOTAL	**$500,000**	**$500,000**	**$0**	**$0**	**$0**	**$1,000,000**

PRIORITIZATION CATEGORIES

- ☒ Risk to Health, Safety and Environment
- ☐ Regulatory or Mandated Requirements
- ☐ Asset Condition, Annual Recurring Costs and Asset Longevity
- ☒ Community Investment and Economic Prosperity
- ☐ Level and Quality of Service
- ☐ Sustainability and Conservation
- ☒ Funding Availability
- ☐ Project Readiness
- ☒ Multiple Category Benefit and Bundling Opportunities

NEW OR EXISTING

- ☒ New Infrastructure / Facility
- ☐ Existing Infrastructure / Facility

CITYWIDE BIKE SHARE PROGRAM

PROJECT NUMBER 8823 **COUNCIL WARD** 1
PROJECT CATEGORY Transportation
PROJECT LOCATION Downtown

PROJECT DESCRIPTION
This project is for the planning and implementation of a bike share program in the Downtown area.

PROJECT STATUS
The project is to be awarded and construction will begin in Fiscal Year 2017/18.

OPERATING BUDGET IMPACT
The operating budget impacts are unknown at this time.

PROJECT FUNDING OVERVIEW

Total Project Cost	Prior Years Funding	Five Year Plan	REMAINING NEEDED
$303,000	$303,000	$0	$0

PROPOSED 2-YEAR BUDGET AND 5-YEAR PLAN

Fund	Funding Source	2018/19	2019/20	2020/21	2021/22	2022/23	TOTAL
		-	-	-	-	-	$0
	TOTAL	$0	$0	$0	$0	$0	$0

PRIORITIZATION CATEGORIES

- ☒ Risk to Health, Safety and Environment
- ☐ Regulatory or Mandated Requirements
- ☐ Asset Condition, Annual Recurring Costs and Asset Longevity
- ☒ Community Investment and Economic Prosperity
- ☒ Level and Quality of Service
- ☐ Sustainability and Conservation
- ☒ Funding Availability
- ☒ Project Readiness
- ☒ Multiple Category Benefit and Bundling Opportunities

NEW OR EXISTING

- ☒ New Infrastructure / Facility
- ☒ Existing Infrastructure / Facility

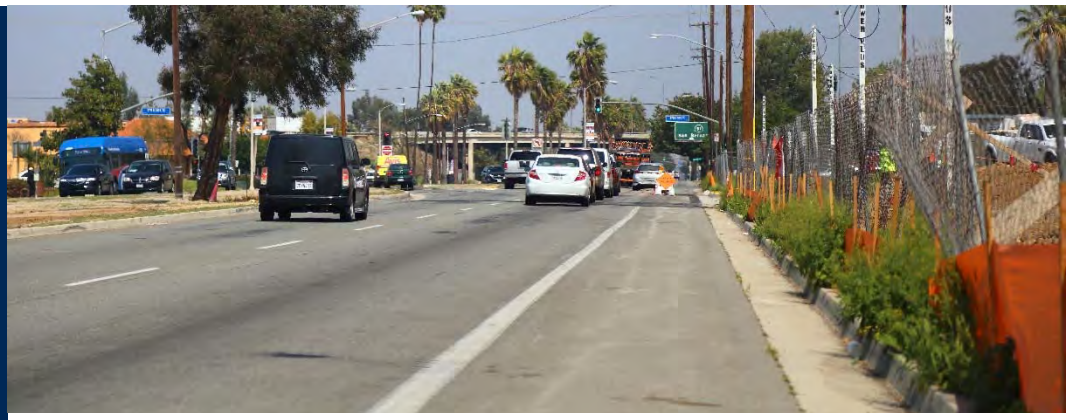

MAGNOLIA AVENUE WIDENING FROM BUCHANAN STREET TO HOLE AVENUE

PROJECT NUMBER 8824 **COUNCIL WARD** 6, 7
PROJECT CATEGORY Transportation
PROJECT LOCATION Magnolia Ave from Buchanan St and Hole Ave

PROJECT DESCRIPTION
This project provides for the construction of street widening improvements within the existing medians to provide a third vehicular lane to the State Route 91 on- and off-ramps from Buchanan Street and Banbury Drive. Additionally, the project will provide beautification improvements to the remaining portions of the existing medians and maintenance improvements to the existing roadway between Buchanan Street and Hole Avenue. The project will also include Riverside Public Utilities Water and Electric facilities.

PROJECT STATUS
The project is currently in the design phase and has been environmentally cleared through NEPA and CEQA. Construction is anticipated to begin early 2019.

OPERATING BUDGET IMPACT
There are no net operating budget impacts associated with this project.

PROJECT FUNDING OVERVIEW

Total Project Cost	Prior Years Funding	Five Year Plan	REMAINING NEEDED
$8,000,000	$8,000,000	$0	$0

PROPOSED 2-YEAR BUDGET AND 5-YEAR PLAN

Fund	Funding Source	2018/19	2019/20	2020/21	2021/22	2022/23	TOTAL
		-	-	-	-	-	$0
	TOTAL	$0	$0	$0	$0	$0	$0

PRIORITIZATION CATEGORIES

- ☒ Risk to Health, Safety and Environment
- ☐ Regulatory or Mandated Requirements
- ☐ Asset Condition, Annual Recurring Costs and Asset Longevity
- ☐ Community Investment and Economic Prosperity
- ☒ Level and Quality of Service
- ☐ Sustainability and Conservation
- ☒ Funding Availability
- ☒ Project Readiness
- ☒ Multiple Category Benefit and Bundling Opportunities

NEW OR EXISTING

- ☒ New Infrastructure / Facility
- ☒ Existing Infrastructure / Facility

MISCELLANEOUS TRAFFIC PROJECTS

PROJECT NUMBER 8832
COUNCIL WARD All Wards
PROJECT CATEGORY Transportation
PROJECT LOCATION Citywide

PROJECT DESCRIPTION
Miscellaneous Traffic Projects encompass a variety of traffic improvements across Riverside. This project is used to install signing and striping improvements to improve safety and traffic flow, refresh faded striping, replaced damaged signs, modify parking restrictions, repair damaged sections of guard rail, adjust median noses, install roadside and overhead signs to facilitate access to Riverside landmarks and attractions, and is a means to make neighborhood traffic improvements in response to resident requests.

PROJECT STATUS
This is an ongoing project to make roadway improvements throughout the City. During Fiscal Year 17/18 the Traffic Division re-striped the intersection of Van Buren Boulevard & Wood Road to increase capacity. Traffic will continue to deploy similar solutions Citywide to enhance safety & operations.

OPERATING BUDGET IMPACT
There are no operating budget impacts anticipated with the completion of this project.

PROJECT FUNDING OVERVIEW

Total Project Cost	Prior Years Funding	Five Year Plan	REMAINING NEEDED
Ongoing	$145,755	$375,000	Ongoing

PROPOSED 2-YEAR BUDGET AND 5-YEAR PLAN

Fund	Funding Source	2018/19	2019/20	2020/21	2021/22	2022/23	TOTAL
230	Gas Tax	$75,000	$75,000	$75,000	$75,000	$75,000	$375,000
	TOTAL	$75,000	$75,000	$75,000	$75,000	$75,000	$375,000

PRIORITIZATION CATEGORIES

- ☒ Risk to Health, Safety and Environment
- ☒ Regulatory or Mandated Requirements
- ☐ Asset Condition, Annual Recurring Costs and Asset Longevity
- ☐ Community Investment and Economic Prosperity
- ☒ Level and Quality of Service
- ☐ Sustainability and Conservation
- ☒ Funding Availability
- ☒ Project Readiness
- ☒ Multiple Category Benefit and Bundling Opportunities

NEW OR EXISTING

- ☐ New Infrastructure / Facility
- ☒ Existing Infrastructure / Facility

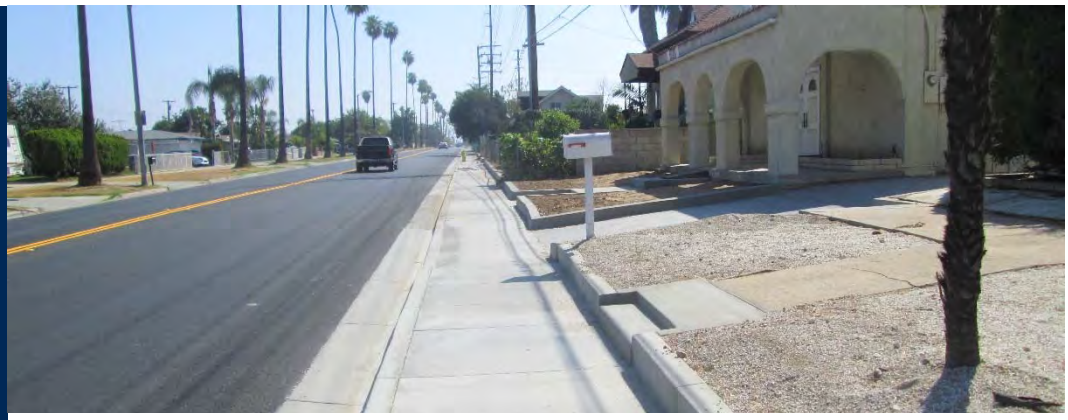

MAJOR STREETS REHABILITATION

PROJECT NUMBER	8880	**COUNCIL WARD**	All Wards
PROJECT CATEGORY	Transportation		
PROJECT LOCATION	Citywide		

PROJECT DESCRIPTION
This project provides for the systematic resurfacing (asphalt overlay) of all arterial streets throughout the City at prescribed intervals. These intervals vary depending on the age of the street and traffic volume. The project also includes removal and replacement of non-compliant pedestrian ramps and damaged curbs, gutters, cross-gutters, driveways and sidewalks adjacent to the street to provide proper drainage and ADA compliance.

PROJECT STATUS
This is an ongoing project to systematically resurface all arterials throughout the City.

OPERATING BUDGET IMPACT
This is an ongoing project and there are no anticipated operating budget impacts.

PROJECT FUNDING OVERVIEW

Total Project Cost	Prior Years Funding	Five Year Plan	REMAINING NEEDED
Ongoing	$3,049,026	$12,000,000	Ongoing

PROPOSED 2-YEAR BUDGET AND 5-YEAR PLAN

Fund	Funding Source	2018/19	2019/20	2020/21	2021/22	2022/23	TOTAL
432	Measure A	$2,400,000	$2,400,000	$2,400,000	$2,400,000	$2,400,000	$12,000,000
	TOTAL	**$2,400,000**	**$2,400,000**	**$2,400,000**	**$2,400,000**	**$2,400,000**	**$12,000,000**

PRIORITIZATION CATEGORIES

- ☒ Risk to Health, Safety and Environment
- ☐ Regulatory or Mandated Requirements
- ☐ Asset Condition, Annual Recurring Costs and Asset Longevity
- ☐ Community Investment and Economic Prosperity
- ☒ Level and Quality of Service
- ☐ Sustainability and Conservation
- ☒ Funding Availability
- ☒ Project Readiness
- ☒ Multiple Category Benefit and Bundling Opportunities

NEW OR EXISTING

- ☐ New Infrastructure / Facility
- ☒ Existing Infrastructure / Facility

CURB AND GUTTER REPAIR PROGRAM

PROJECT NUMBER 8883
COUNCIL WARD All Wards
PROJECT CATEGORY Transportation
PROJECT LOCATION Citywide

PROJECT DESCRIPTION
This project provides for the repair of concrete curbs and gutters throughout the City. The project will remove and reconstruct curbs and gutters that are damaged and/or uplifted, mostly from tree roots.

PROJECT STATUS
This is an ongoing project to repair curb and gutter throughout the City.

OPERATING BUDGET IMPACT
This is an ongoing project with no anticipated operating budget impacts.

PROJECT FUNDING OVERVIEW

Total Project Cost	Prior Years Funding	Five Year Plan	REMAINING NEEDED
Ongoing	$663,506	$1,000,000	Ongoing

PROPOSED 2-YEAR BUDGET AND 5-YEAR PLAN

Fund	Funding Source	2018/19	2019/20	2020/21	2021/22	2022/23	TOTAL
230	Gas Tax	$200,000	$200,000	$200,000	$200,000	$200,000	$1,000,000
	TOTAL	$200,000	$200,000	$200,000	$200,000	$200,000	$1,000,000

PRIORITIZATION CATEGORIES

- ☒ Risk to Health, Safety and Environment
- ☒ Regulatory or Mandated Requirements
- ☐ Asset Condition, Annual Recurring Costs and Asset Longevity
- ☐ Community Investment and Economic Prosperity
- ☒ Level and Quality of Service
- ☐ Sustainability and Conservation
- ☒ Funding Availability
- ☒ Project Readiness
- ☒ Multiple Category Benefit and Bundling Opportunities

NEW OR EXISTING

- ☐ New Infrastructure / Facility
- ☒ Existing Infrastructure / Facility

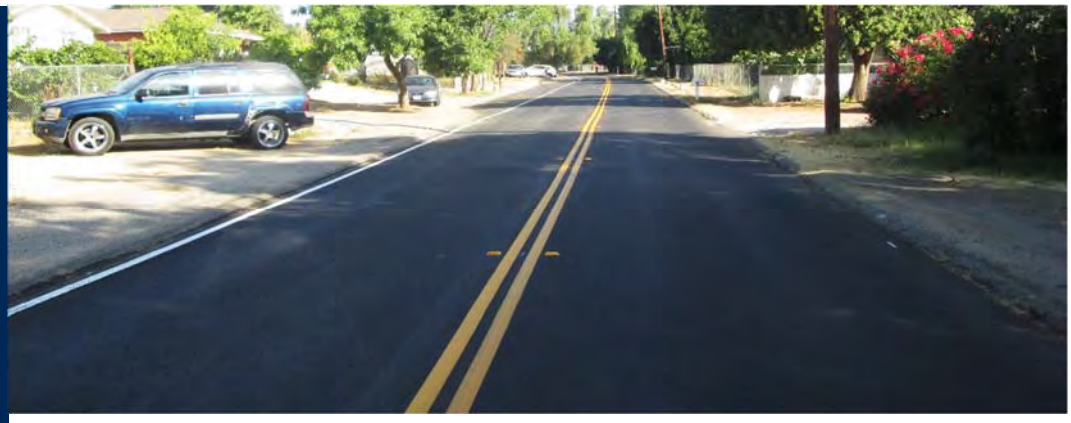

MINOR STREET REHABILITATION PROGRAM

PROJECT NUMBER 8884
COUNCIL WARD All Wards
PROJECT CATEGORY Transportation
PROJECT LOCATION Citywide

PROJECT DESCRIPTION
This program provides the asphalt concrete pavement rehabilitation of minor streets throughout the City. This program also includes removal and reconstruction of non-compliant pedestrian ramps and repair of curbs, gutters, driveways, and sidewalks adjacent to the street to provide proper drainage, ADA compliance, and better ride quality.

PROJECT STATUS
This is an ongoing to project to improve minor streets throughout the City.

OPERATING BUDGET IMPACT
This is an ongoing project with no anticipated operating budget impacts.

PROJECT FUNDING OVERVIEW

Total Project Cost	Prior Years Funding	Five Year Plan	REMAINING NEEDED
Ongoing	$7,278,479	$7,500,000	Ongoing

PROPOSED 2-YEAR BUDGET AND 5-YEAR PLAN

Fund	Funding Source	2018/19	2019/20	2020/21	2021/22	2022/23	TOTAL
230	Gas Tax	$1,500,000	$1,500,000	$1,500,000	$1,500,000	$1,500,000	$7,500,000
	TOTAL	$1,500,000	$1,500,000	$1,500,000	$1,500,000	$1,500,000	$7,500,000

PRIORITIZATION CATEGORIES

- ☒ Risk to Health, Safety and Environment
- ☒ Regulatory or Mandated Requirements
- ☐ Asset Condition, Annual Recurring Costs and Asset Longevity
- ☐ Community Investment and Economic Prosperity
- ☒ Level and Quality of Service
- ☐ Sustainability and Conservation
- ☒ Funding Availability
- ☒ Project Readiness
- ☒ Multiple Category Benefit and Bundling Opportunities

NEW OR EXISTING

- ☒ New Infrastructure / Facility
- ☐ Existing Infrastructure / Facility

SIDEWALK/TRAIL CONSTRUCTION PROGRAM

PROJECT NUMBER 8885
COUNCIL WARD All Wards
PROJECT CATEGORY Transportation
PROJECT LOCATION Citywide

PROJECT DESCRIPTION
This project provides for the construction of concrete sidewalk and trails to provide improved pedestrian access and circulation.

PROJECT STATUS
This is an ongoing project to construct sidewalk and trails.

OPERATING BUDGET IMPACT
This is an ongoing project with no anticipated operating budget impact.

PROJECT FUNDING OVERVIEW

Total Project Cost	Prior Years Funding	Five Year Plan	REMAINING NEEDED
Ongoing	$321,464	$1,500,000	Ongoing

PROPOSED 2-YEAR BUDGET AND 5-YEAR PLAN

Fund	Funding Source	2018/19	2019/20	2020/21	2021/22	2022/23	TOTAL
230	Gas Tax	$300,000	$300,000	$300,000	$300,000	$300,000	$1,500,000
	TOTAL	$300,000	$300,000	$300,000	$300,000	$300,000	$1,500,000

PRIORITIZATION CATEGORIES

- ☒ Risk to Health, Safety and Environment
- ☒ Regulatory or Mandated Requirements
- ☐ Asset Condition, Annual Recurring Costs and Asset Longevity
- ☐ Community Investment and Economic Prosperity
- ☒ Level and Quality of Service
- ☐ Sustainability and Conservation
- ☒ Funding Availability
- ☒ Project Readiness
- ☒ Multiple Category Benefit and Bundling Opportunities

NEW OR EXISTING

- ☐ New Infrastructure / Facility
- ☒ Existing Infrastructure / Facility

SIDEWALK REPAIR PROGRAM

PROJECT NUMBER	8886	**COUNCIL WARD**	All Wards
PROJECT CATEGORY	Transportation		
PROJECT LOCATION	Citywide		

PROJECT DESCRIPTION
This program provides the repair for concrete sidewalks throughout the City. The program will remove and reconstruct sidewalk that are damaged and/or uplifted, mostly from tree roots.

PROJECT STATUS
This is an ongoing project to repair sidewalk throughout the City.

OPERATING BUDGET IMPACT
This is an ongoing project with no anticipated operating budget impacts.

PROJECT FUNDING OVERVIEW

Total Project Cost	Prior Years Funding	Five Year Plan	REMAINING NEEDED
Ongoing	$1,363,853	$1,500,000	Ongoing

PROPOSED 2-YEAR BUDGET AND 5-YEAR PLAN

Fund	Funding Source	2018/19	2019/20	2020/21	2021/22	2022/23	TOTAL
230	Gas Tax	$300,000	$300,000	$300,000	$300,000	$300,000	$1,500,000
	TOTAL	**$300,000**	**$300,000**	**$300,000**	**$300,000**	**$300,000**	**$1,500,000**

PRIORITIZATION CATEGORIES

- ☒ Risk to Health, Safety and Environment
- ☒ Regulatory or Mandated Requirements
- ☒ Asset Condition, Annual Recurring Costs and Asset Longevity
- ☐ Community Investment and Economic Prosperity
- ☒ Level and Quality of Service
- ☐ Sustainability and Conservation
- ☒ Funding Availability
- ☒ Project Readiness
- ☒ Multiple Category Benefit and Bundling Opportunities

NEW OR EXISTING

- ☒ New Infrastructure / Facility
- ☐ Existing Infrastructure / Facility

PEDESTRIAN RAMPS PROGRAM

PROJECT NUMBER 8887
COUNCIL WARD All Wards
PROJECT CATEGORY Transportation
PROJECT LOCATION Citywide

PROJECT DESCRIPTION
This project provides for the construction of new pedestrian ramps and detectable warning surfaces along arterial and collector streets to provide improved pedestrian access to sidewalks.

PROJECT STATUS
This is an ongoing project to construct pedestrian ramps and detectable warning surfaces.

OPERATING BUDGET IMPACT
This is an ongoing project to improve pedestrian access to sidewalks. There are no anticipated operating budget impacts associated with this project.

PROJECT FUNDING OVERVIEW

Total Project Cost	Prior Years Funding	Five Year Plan	REMAINING NEEDED
Ongoing	$995,350	$1,500,000	Ongoing

PROPOSED 2-YEAR BUDGET AND 5-YEAR PLAN

Fund	Funding Source	2018/19	2019/20	2020/21	2021/22	2022/23	TOTAL
230	Gas Tax	$300,000	$300,000	$300,000	$300,000	$300,000	$1,500,000
	TOTAL	$300,000	$300,000	$300,000	$300,000	$300,000	$1,500,000

PRIORITIZATION CATEGORIES

- ☒ Risk to Health, Safety and Environment
- ☒ Regulatory or Mandated Requirements
- ☒ Asset Condition, Annual Recurring Costs and Asset Longevity
- ☐ Community Investment and Economic Prosperity
- ☒ Level and Quality of Service
- ☐ Sustainability and Conservation
- ☒ Funding Availability
- ☒ Project Readiness
- ☒ Multiple Category Benefit and Bundling Opportunities

NEW OR EXISTING

- ☒ New Infrastructure / Facility
- ☒ Existing Infrastructure / Facility

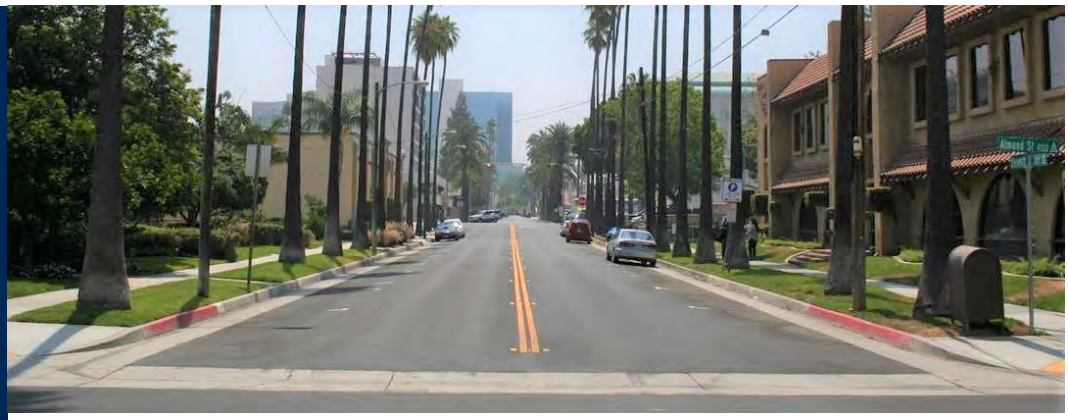

CDBG STREET IMPROVEMENTS - MATCHING FUNDS

PROJECT NUMBER 8888
COUNCIL WARD All Wards
PROJECT CATEGORY Transportation
PROJECT LOCATION Citywide

PROJECT DESCRIPTION
The federal Community Development Block Grant (CDBG) program is a flexible program that provides viable urban communities with resources to address development needs and is administered by the City's Community Development Department for eligible areas throughout the City. This project provides matching funds for various systematic street improvement projects awarded to Public Works under the CDBG program including construction of asphalt resurfacing, construction of pedestrian ramps with detectable warning surfaces to provide improved pedestrian access to sidewalks, and construction of new sidewalks to provide improved pedestrian access and circulation.

PROJECT STATUS
This is an ongoing project to support sidewalk improvements funded by the Community Development Block Grant (CDBG).

OPERATING BUDGET IMPACT
This is an ongoing project to support CDBG funded street improvements. There are no operating budget impacts associated with this project.

PROJECT FUNDING OVERVIEW

Total Project Cost	Prior Years Funding	Five Year Plan	REMAINING NEEDED
Ongoing	$1,016,417	$750,000	Ongoing

PROPOSED 2-YEAR BUDGET AND 5-YEAR PLAN

Fund	Funding Source	2018/19	2019/20	2020/21	2021/22	2022/23	TOTAL
230	Gas Tax	$150,000	$150,000	$150,000	$150,000	$150,000	$750,000
	TOTAL	$150,000	$150,000	$150,000	$150,000	$150,000	$750,000

PRIORITIZATION CATEGORIES

- ☒ Risk to Health, Safety and Environment
- ☐ Regulatory or Mandated Requirements
- ☒ Asset Condition, Annual Recurring Costs and Asset Longevity
- ☒ Community Investment and Economic Prosperity
- ☒ Level and Quality of Service
- ☐ Sustainability and Conservation
- ☒ Funding Availability
- ☒ Project Readiness
- ☒ Multiple Category Benefit and Bundling Opportunities

NEW OR EXISTING

- ☒ New Infrastructure / Facility
- ☐ Existing Infrastructure / Facility

NORTE VISTA SIDEWALK IMPROVEMENTS

PROJECT NUMBER 8889 **COUNCIL WARD** 7

PROJECT CATEGORY Transportation

PROJECT LOCATION Gaylord St, Jones Ave, Chadbourne Ave, Bushnell Ave

PROJECT DESCRIPTION

The project proposes to widen one side of the pavement section and install, curb, gutter, street lights, driveway approaches, ADA ramps, and sidewalk in order to resolve drainage issues on 2.9 miles of residential streets.

PROJECT STATUS

The project is currently under construction and anticipated to be complete in summer 2018.

OPERATING BUDGET IMPACT

There are no operating budget impacts associated with the completion of this project.

PROJECT FUNDING OVERVIEW

Total Project Cost	Prior Years Funding	Five Year Plan	REMAINING NEEDED
$4,015,700	$4,015,700	$0	$0

PROPOSED 2-YEAR BUDGET AND 5-YEAR PLAN

Fund	Funding Source	2018/19	2019/20	2020/21	2021/22	2022/23	TOTAL
		-	-	-	-	-	$0
	TOTAL	$0	$0	$0	$0	$0	$0

PRIORITIZATION CATEGORIES

- ☒ Risk to Health, Safety and Environment
- ☐ Regulatory or Mandated Requirements
- ☐ Asset Condition, Annual Recurring Costs and Asset Longevity
- ☐ Community Investment and Economic Prosperity
- ☒ Level and Quality of Service
- ☐ Sustainability and Conservation
- ☒ Funding Availability
- ☒ Project Readiness
- ☒ Multiple Category Benefit and Bundling Opportunities

NEW OR EXISTING

- ☒ New Infrastructure / Facility
- ☒ Existing Infrastructure / Facility

WELLS AND ARLANZA SIDEWALK PROJECT

PROJECT NUMBER 8890 **COUNCIL WARD** 6

PROJECT CATEGORY Transportation

PROJECT LOCATION Along Babb Ave, Kent Ave, Ivanhoe Ave, and Challen Ave

PROJECT DESCRIPTION
This project proposes to construct sidewalk on one side of the residential streets between Philbin Avenue and Wells Avenue The Streets included in the project are Babb Avenue, Kent Avenue, Ivanhoe Avenue and Challen Avenue.

PROJECT STATUS
Construction of this project began in April 2018.

OPERATING BUDGET IMPACT
There are no additional operating impacts anticipated with the completion of this project.

PROJECT FUNDING OVERVIEW

Total Project Cost	Prior Years Funding	Five Year Plan	REMAINING NEEDED
$1,839,134	$1,839,134	$0	$0

PROPOSED 2-YEAR BUDGET AND 5-YEAR PLAN

Fund	Funding Source	2018/19	2019/20	2020/21	2021/22	2022/23	TOTAL
		-	-	-	-	-	$0
	TOTAL	$0	$0	$0	$0	$0	$0

PRIORITIZATION CATEGORIES

- ☒ Risk to Health, Safety and Environment
- ☐ Regulatory or Mandated Requirements
- ☐ Asset Condition, Annual Recurring Costs and Asset Longevity
- ☒ Community Investment and Economic Prosperity
- ☒ Level and Quality of Service
- ☐ Sustainability and Conservation
- ☒ Funding Availability
- ☒ Project Readiness
- ☒ Multiple Category Benefit and Bundling Opportunities

NEW OR EXISTING

- ☒ New Infrastructure / Facility
- ☒ Existing Infrastructure / Facility

DOWNTOWN BICYCLE & PEDESTRIAN IMPROVEMENTS

PROJECT NUMBER	8891	**COUNCIL WARD**	1
PROJECT CATEGORY	Transportation		
PROJECT LOCATION	Downtown		

PROJECT DESCRIPTION
The Public Works Department worked with local neighborhoods, businesses, the Bicycle Advisory Committee, and the Riverside County Transportation Commission (RCTC) to identify biking and walking components near Downtown area to promote an active lifestyle.

The ATP project focused on improving sidewalk and Class II bike lane connectivity and deploying select project components to promote increased walking and biking such as new and updated crosswalks and bicycle amenities.

PROJECT STATUS
The project has been awarded and will begin construction in 2017/18.

OPERATING BUDGET IMPACT
Once the project is completed, the anticipated operating budget impact will be approximately $10,000 per year to maintain the pedestrian signals and the information kiosks.

PROJECT FUNDING OVERVIEW

Total Project Cost	Prior Years Funding	Five Year Plan	REMAINING NEEDED
$1,418,000	$1,418,000	$0	**$0**

PROPOSED 2-YEAR BUDGET AND 5-YEAR PLAN

Fund	Funding Source	2018/19	2019/20	2020/21	2021/22	2022/23	TOTAL
		-	-	-	-	-	$0
	TOTAL	**$0**	**$0**	**$0**	**$0**	**$0**	**$0**

PRIORITIZATION CATEGORIES

- ☒ Risk to Health, Safety and Environment
- ☐ Regulatory or Mandated Requirements
- ☒ Asset Condition, Annual Recurring Costs and Asset Longevity
- ☐ Community Investment and Economic Prosperity
- ☒ Level and Quality of Service
- ☐ Sustainability and Conservation
- ☒ Funding Availability
- ☒ Project Readiness
- ☒ Multiple Category Benefit and Bundling Opportunities

NEW OR EXISTING

- ☐ New Infrastructure / Facility
- ☒ Existing Infrastructure / Facility

MINOR STREET PRESERVATION PROGRAM (SLURRY/ARAM)

PROJECT NUMBER 8894
COUNCIL WARD All Wards
PROJECT CATEGORY Transportation
PROJECT LOCATION Citywide

PROJECT DESCRIPTION
This program provides for the asphalt concrete pavement preservation and resurfacing of Minor Streets throughout the City. This program will use slurry seal and/or other preservation methods as determined to accomplish this goal.

PROJECT STATUS
This is an ongoing project to preserve and resurface minor streets throughout the City.

OPERATING BUDGET IMPACT
There are no operating budget impacts associated with this ongoing project.

PROJECT FUNDING OVERVIEW

Total Project Cost	Prior Years Funding	Five Year Plan	REMAINING NEEDED
Ongoing	$2,553,628	$2,500,000	Ongoing

PROPOSED 2-YEAR BUDGET AND 5-YEAR PLAN

Fund	Funding Source	2018/19	2019/20	2020/21	2021/22	2022/23	TOTAL
230	Gas Tax	$500,000	$500,000	$500,000	$500,000	$500,000	$2,500,000
	TOTAL	$500,000	$500,000	$500,000	$500,000	$500,000	$2,500,000

PRIORITIZATION CATEGORIES

- ☒ Risk to Health, Safety and Environment
- ☐ Regulatory or Mandated Requirements
- ☐ Asset Condition, Annual Recurring Costs and Asset Longevity
- ☒ Community Investment and Economic Prosperity
- ☒ Level and Quality of Service
- ☐ Sustainability and Conservation
- ☒ Funding Availability
- ☒ Project Readiness
- ☒ Multiple Category Benefit and Bundling Opportunities

NEW OR EXISTING

- ☒ New Infrastructure / Facility
- ☒ Existing Infrastructure / Facility

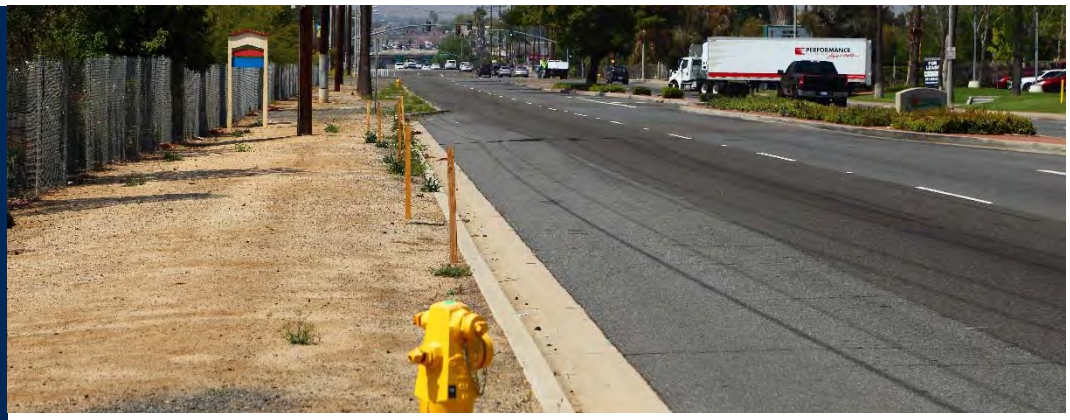

VAN BUREN BLVD WIDENING

PROJECT NUMBER 8926 **COUNCIL WARD** 4

PROJECT CATEGORY Transportation

PROJECT LOCATION Van Buren Blvd from King Ave to Bountiful St

PROJECT DESCRIPTION

The project proposes to widen Van Buren Boulevard from King Avenue to Bountiful Street, a total distance of approximately 2.5 miles, to improve traffic operations within the corridor segment. The project would widen Van Buren Boulevard from four lanes to six lanes and add right turn pockets at major intersections, new driveways, and sidewalk. The County of Riverside is taking the lead on this project and the City of Riverside will only be responsible to provide its fair share contribution to the County of Riverside.

PROJECT STATUS

The County of Riverside is currently in the design phase for this project.

OPERATING BUDGET IMPACT

There are no operating budget impacts anticipated with the completion of this project.

PROJECT FUNDING OVERVIEW

Total Project Cost	Prior Years Funding	Five Year Plan	REMAINING NEEDED
$253,478	$253,478	$0	$0

PROPOSED 2-YEAR BUDGET AND 5-YEAR PLAN

Fund	Funding Source	2018/19	2019/20	2020/21	2021/22	2022/23	TOTAL
		-	-	-	-	-	$0
	TOTAL	$0	$0	$0	$0	$0	$0

PRIORITIZATION CATEGORIES

- ☒ Risk to Health, Safety and Environment
- ☐ Regulatory or Mandated Requirements
- ☐ Asset Condition, Annual Recurring Costs and Asset Longevity
- ☐ Community Investment and Economic Prosperity
- ☒ Level and Quality of Service
- ☐ Sustainability and Conservation
- ☒ Funding Availability
- ☐ Project Readiness
- ☒ Multiple Category Benefit and Bundling Opportunities

NEW OR EXISTING

- ☒ New Infrastructure / Facility
- ☐ Existing Infrastructure / Facility

CENTRAL/CANYON CREST/WATKINS BIKE LANES

PROJECT NUMBER 8935 **COUNCIL WARD** 1, 2, 3, 5
PROJECT CATEGORY Transportation
PROJECT LOCATION Citywide

PROJECT DESCRIPTION
The Active Transportation Program (ATP) funded this project to install cycle tracks, bike lanes, HAWK pedestrian signals, and "sharrows" for bicyclists throughout the City.

PROJECT STATUS
The project has been approved by RCTC and is currently in the environmental review stage. A scope change is being processed for the project, as a portion of the initial grant proposal, the Pine St. Traffic Circles, will be relocated to another City roadway following additional outreach.

OPERATING BUDGET IMPACT
Once the project is completed, the anticipated operating budget impact will be approximately $6,000 per year to maintain the HAWK pedestrian signals.

PROJECT FUNDING OVERVIEW

Total Project Cost	Prior Years Funding	Five Year Plan	REMAINING NEEDED
$1,249,000	$1,249,000	$0	$0

PROPOSED 2-YEAR BUDGET AND 5-YEAR PLAN

Fund	Funding Source	2018/19	2019/20	2020/21	2021/22	2022/23	TOTAL
		-	-	-	-	-	$0
	TOTAL	$0	$0	$0	$0	$0	$0

PRIORITIZATION CATEGORIES

- ☒ Risk to Health, Safety and Environment
- ☐ Regulatory or Mandated Requirements
- ☐ Asset Condition, Annual Recurring Costs and Asset Longevity
- ☐ Community Investment and Economic Prosperity
- ☒ Level and Quality of Service
- ☐ Sustainability and Conservation
- ☒ Funding Availability
- ☐ Project Readiness
- ☒ Multiple Category Benefit and Bundling Opportunities

NEW OR EXISTING

- ☒ New Infrastructure / Facility
- ☐ Existing Infrastructure / Facility

HIGH FRICTION SURFACE AND HAWK SIGNALS

PROJECT NUMBER 8936 **COUNCIL WARD** 1, 3, 4, 7
PROJECT CATEGORY Transportation
PROJECT LOCATION Various

PROJECT DESCRIPTION
Highway Safety Improvement Program (HSIP) grant funded project to install segments of high friction surface treatment, perform signal timing in the downtown, and install two HAWK pedestrian signals.

PROJECT STATUS
The project is anticipated to apply for construction allocation from Caltrans in the first quarter of 2018.

OPERATING BUDGET IMPACT
Once the project is completed, the anticipated operating budget impact will be approximately $6,000 per year to maintain the HAWK pedestrian signals.

PROJECT FUNDING OVERVIEW

Total Project Cost	Prior Years Funding	Five Year Plan	REMAINING NEEDED
$1,293,000	$1,293,000	$0	$0

PROPOSED 2-YEAR BUDGET AND 5-YEAR PLAN

Fund	Funding Source	2018/19	2019/20	2020/21	2021/22	2022/23	TOTAL
		-	-	-	-	-	$0
	TOTAL	$0	$0	$0	$0	$0	$0

PRIORITIZATION CATEGORIES

- ☒ Risk to Health, Safety and Environment
- ☐ Regulatory or Mandated Requirements
- ☒ Asset Condition, Annual Recurring Costs and Asset Longevity
- ☐ Community Investment and Economic Prosperity
- ☒ Level and Quality of Service
- ☐ Sustainability and Conservation
- ☒ Funding Availability
- ☒ Project Readiness
- ☒ Multiple Category Benefit and Bundling Opportunities

NEW OR EXISTING

- ☐ New Infrastructure / Facility
- ☒ Existing Infrastructure / Facility

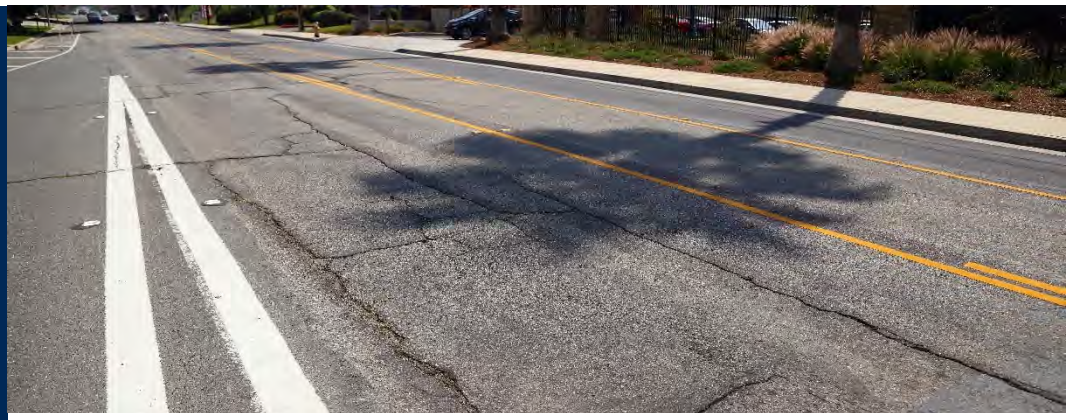

MONROE REHAB-LINCOLN TO ARLINGTON

PROJECT NUMBER 8937 **COUNCIL WARD** 5, 6
PROJECT CATEGORY Transportation
PROJECT LOCATION Monroe St. from Arlington Ave. to Lincoln Ave.

PROJECT DESCRIPTION
This project provides for the asphalt concrete pavement rehabilitation of Monroe Street between Arlington Avenue and Lincoln Avenue. The project also includes removal and replacement of non-compliant pedestrian ramps and damaged curbs, gutters, cross-gutters, driveways and sidewalks adjacent to the street to provide proper drainage and ADA compliance.

PROJECT STATUS
The project was separated into multiple phases. Phase 1 will include Monroe Rehab (Magnolia to California), minor streets rehab, and median improvements. Remaining phases will extend rehabilitation to Lincoln Avenue and Arlington Avenue.

OPERATING BUDGET IMPACT
The completion of this project will not result in a net increase to operating budget impacts.

PROJECT FUNDING OVERVIEW

Total Project Cost	Prior Years Funding	Five Year Plan	REMAINING NEEDED
$2,456,500	$2,456,500	$0	$0

PROPOSED 2-YEAR BUDGET AND 5-YEAR PLAN

Fund	Funding Source	2018/19	2019/20	2020/21	2021/22	2022/23	TOTAL
		-	-	-	-	-	$0
	TOTAL	$0	$0	$0	$0	$0	$0

PRIORITIZATION CATEGORIES

- ☒ Risk to Health, Safety and Environment
- ☐ Regulatory or Mandated Requirements
- ☐ Asset Condition, Annual Recurring Costs and Asset Longevity
- ☐ Community Investment and Economic Prosperity
- ☒ Level and Quality of Service
- ☐ Sustainability and Conservation
- ☒ Funding Availability
- ☒ Project Readiness
- ☒ Multiple Category Benefit and Bundling Opportunities

NEW OR EXISTING

- ☒ New Infrastructure / Facility
- ☒ Existing Infrastructure / Facility

SAN ANDREAS DRAINAGE IMPROVEMENTS

PROJECT NUMBER 8959 **COUNCIL WARD** 1

PROJECT CATEGORY Transportation

PROJECT LOCATION Northwest of intersection of Sand Andreas and Glenwood

PROJECT DESCRIPTION
This project proposes flattening the existing slopes, excavation and construction of a retention basin, basin outlet storm drain pipe and maintenance access road. It also includes hydroseeding, vegetation and riprap.

PROJECT STATUS
This project is under design.

OPERATING BUDGET IMPACT
There are no anticipated operating budget impacts associated with this project.

PROJECT FUNDING OVERVIEW

Total Project Cost	Prior Years Funding	Five Year Plan	REMAINING NEEDED
$175,000	$50,000	$125,000	$0

PROPOSED 2-YEAR BUDGET AND 5-YEAR PLAN

Fund	Funding Source	2018/19	2019/20	2020/21	2021/22	2022/23	TOTAL
432	Measure A	$125,000	-	-	-	-	$125,000
	TOTAL	$125,000	$0	$0	$0	$0	$125,000

PRIORITIZATION CATEGORIES

- ☒ Risk to Health, Safety and Environment
- ☐ Regulatory or Mandated Requirements
- ☐ Asset Condition, Annual Recurring Costs and Asset Longevity
- ☐ Community Investment and Economic Prosperity
- ☒ Level and Quality of Service
- ☐ Sustainability and Conservation
- ☒ Funding Availability
- ☒ Project Readiness
- ☒ Multiple Category Benefit and Bundling Opportunities

NEW OR EXISTING

- ☐ New Infrastructure / Facility
- ☒ Existing Infrastructure / Facility

INDIAN HILL ROAD SLOPE MITIGATION PROJECT

PROJECT NUMBER 8990 **COUNCIL WARD** 1

PROJECT CATEGORY Transportation

PROJECT LOCATION Indian Hill Rd east of Ladera Ln and Indian Hills Rd

PROJECT DESCRIPTION

The project proposes to construct 100 linear feet of soldier pile retaining wall with remedial grading including excavation and fill on Indian Hill Road to support the roadway within street right of way. The proposed Improvements include pile, steel beam, lagging and street rehabilitation.

PROJECT STATUS

This project is under design. The Geotech Firm and Structural Engineer Firm have been selected for the design of this project.

OPERATING BUDGET IMPACT

There are no anticipated operating budget impacts with the completion of this project.

PROJECT FUNDING OVERVIEW

Total Project Cost	Prior Years Funding	Five Year Plan	REMAINING NEEDED
$275,000	$65,000	$210,000	$0

PROPOSED 2-YEAR BUDGET AND 5-YEAR PLAN

Fund	Funding Source	2018/19	2019/20	2020/21	2021/22	2022/23	TOTAL
230	Gas Tax	$210,000	-	-	-	-	$210,000
	TOTAL	$210,000	$0	$0	$0	$0	$210,000

PRIORITIZATION CATEGORIES

- ☒ Risk to Health, Safety and Environment
- ☐ Regulatory or Mandated Requirements
- ☒ Asset Condition, Annual Recurring Costs and Asset Longevity
- ☐ Community Investment and Economic Prosperity
- ☒ Level and Quality of Service
- ☐ Sustainability and Conservation
- ☒ Funding Availability
- ☒ Project Readiness
- ☒ Multiple Category Benefit and Bundling Opportunities

NEW OR EXISTING

- ☒ New Infrastructure / Facility
- ☒ Existing Infrastructure / Facility

IOWA AVENUE WIDENING

PROJECT NUMBER 8998 **COUNCIL WARD** 2

PROJECT CATEGORY Transportation

PROJECT LOCATION Iowa Ave between Martin Luther King Blvd and University Ave

PROJECT DESCRIPTION

The project includes the widening of Iowa Avenue between University Avenue and Martin Luther King Boulevard to provide 2 travel lanes in each direction including a dedicated cycle track section between Martin Luther King Boulevard and Everton Place. The project will also provide new utility infrastructure including storm drain, sanitary sewer, underground electric, and domestic water. The project will provide for new landscape and irrigation for the new parkways, medians, and a cycle track buffer strip.

PROJECT STATUS

The project is currently in the design phase and right of way is currently being negotiated with the adjacent property owners and developments.

OPERATING BUDGET IMPACT

There are no additional operating impacts anticipated with the completion of this project.

PROJECT FUNDING OVERVIEW

Total Project Cost	Prior Years Funding	Five Year Plan	REMAINING NEEDED
$4,000,000	$3,000,000	$1,000,000	$0

PROPOSED 2-YEAR BUDGET AND 5-YEAR PLAN

Fund	Funding Source	2018/19	2019/20	2020/21	2021/22	2022/23	TOTAL
433	Transportation DIF	$1,000,000	-	-	-	-	$1,000,000
	TOTAL	$1,000,000	$0	$0	$0	$0	$1,000,000

PRIORITIZATION CATEGORIES

- ☐ Risk to Health, Safety and Environment
- ☐ Regulatory or Mandated Requirements
- ☐ Asset Condition, Annual Recurring Costs and Asset Longevity
- ☒ Community Investment and Economic Prosperity
- ☒ Level and Quality of Service
- ☐ Sustainability and Conservation
- ☒ Funding Availability
- ☒ Project Readiness
- ☒ Multiple Category Benefit and Bundling Opportunities

NEW OR EXISTING

- ☒ New Infrastructure / Facility
- ☐ Existing Infrastructure / Facility

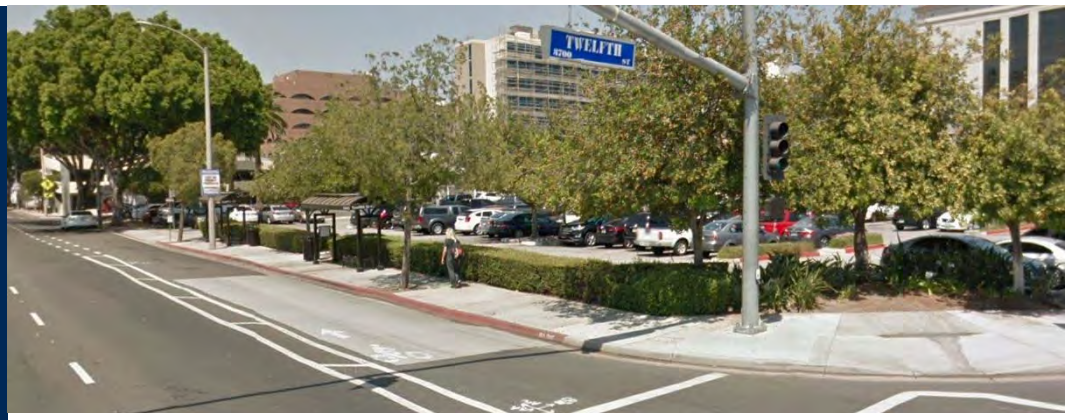

RTA BUS PAD CONSTRUCTION

PROJECT NUMBER 9006 **COUNCIL WARD** 1, 2, 3, 5, 6
PROJECT CATEGORY Transportation
PROJECT LOCATION Magnolia Ave from La Sierra Ave to Third St

PROJECT DESCRIPTION
The project will construct 30 concrete bus pads for the Riverside Transit Agency's (RTA) RapidLink and Downtown bus stop locations.

PROJECT STATUS
In November 2017, RTA and the City entered into a Cooperative Agreement for the construction of the concrete bus pads. The project is currently in the design phase and is anticipated to be under construction in Summer 2018.

OPERATING BUDGET IMPACT
There are no operating budget impacts anticipated with the completion of this project.

PROJECT FUNDING OVERVIEW

Total Project Cost	Prior Years Funding	Five Year Plan	REMAINING NEEDED
$970,000	$970,000	$0	$0

PROPOSED 2-YEAR BUDGET AND 5-YEAR PLAN

Fund	Funding Source	2018/19	2019/20	2020/21	2021/22	2022/23	TOTAL
		-	-	-	-	-	-
	TOTAL	$0	$0	$0	$0	$0	$0

PRIORITIZATION CATEGORIES

- ☒ Risk to Health, Safety and Environment
- ☐ Regulatory or Mandated Requirements
- ☐ Asset Condition, Annual Recurring Costs and Asset Longevity
- ☐ Community Investment and Economic Prosperity
- ☒ Level and Quality of Service
- ☐ Sustainability and Conservation
- ☒ Funding Availability
- ☐ Project Readiness
- ☒ Multiple Category Benefit and Bundling Opportunities

NEW OR EXISTING

- ☒ New Infrastructure / Facility
- ☒ Existing Infrastructure / Facility

ACTIVE TRANSPORTATION MASTER PLAN

PROJECT NUMBER	9023	**COUNCIL WARD**	All Wards
PROJECT CATEGORY	Transportation		
PROJECT LOCATION	Citywide		

PROJECT DESCRIPTION

The City of Riverside Citywide Active Transportation Plan will provide a conceptual, multi-modal planning foundation for the City's future bicycle and pedestrian improvement projects. The planning process will integrate existing network, modeled, and survey data to fully assess needs and demands, and produce a design toolbox and complete proposed active transportation network. The final plan will be reviewed by relevant advisory committees and boards, and ultimately adopted by the City Council.

PROJECT STATUS

The project was selected to be funded as part of the Southern California Association of Government's Phase II of the 2016 Sustainability Planning Grant program. Plan development is anticipated to begin in December 2018.

OPERATING BUDGET IMPACT

There are no operating budget impacts associated with the development of the Active Transportation Master Plan.

PROJECT FUNDING OVERVIEW

Total Project Cost	Prior Years Funding	Five Year Plan	REMAINING NEEDED
$200,000	$0	$200,000	**$0**

PROPOSED 2-YEAR BUDGET AND 5-YEAR PLAN

Fund	Funding Source	2018/19	2019/20	2020/21	2021/22	2022/23	TOTAL
432	Measure A	$200,000	-	-	-	-	$200,000
	TOTAL	**$200,000**	**$0**	**$0**	**$0**	**$0**	**$200,000**

PRIORITIZATION CATEGORIES

- ☒ Risk to Health, Safety and Environment
- ☐ Regulatory or Mandated Requirements
- ☐ Asset Condition, Annual Recurring Costs and Asset Longevity
- ☐ Community Investment and Economic Prosperity
- ☒ Level and Quality of Service
- ☐ Sustainability and Conservation
- ☒ Funding Availability
- ☒ Project Readiness
- ☒ Multiple Category Benefit and Bundling Opportunities

NEW OR EXISTING

- ☒ New Infrastructure / Facility
- ☒ Existing Infrastructure / Facility

INTERCONNECTED TRAFFIC SIGNAL CONTROLLER REPLACEMENT

PROJECT NUMBER 9024 **COUNCIL WARD** All Wards
PROJECT CATEGORY Transportation
PROJECT LOCATION Along interconnected arterials citywide

PROJECT DESCRIPTION
The project will replace the City's 247 interconnected traffic signal controllers and replace / upgrade the City's current central traffic control system.

PROJECT STATUS
The project was selected to be funded through the State Highway Safety Improvement Program and is anticipated to begin in December 2018.

OPERATING BUDGET IMPACT
There are no operating budget impacts associated with the completion of this project.

PROJECT FUNDING OVERVIEW

Total Project Cost	Prior Years Funding	Five Year Plan	REMAINING NEEDED
$1,119,800	$559,800	$560,000	$0

PROPOSED 2-YEAR BUDGET AND 5-YEAR PLAN

Fund	Funding Source	2018/19	2019/20	2020/21	2021/22	2022/23	TOTAL
432	Measure A	$560,000	-	-	-	-	$560,000
	TOTAL	$560,000	$0	$0	$0	$0	$560,000

PRIORITIZATION CATEGORIES

- ☒ Risk to Health, Safety and Environment
- ☒ Regulatory or Mandated Requirements
- ☐ Asset Condition, Annual Recurring Costs and Asset Longevity
- ☐ Community Investment and Economic Prosperity
- ☒ Level and Quality of Service
- ☐ Sustainability and Conservation
- ☒ Funding Availability
- ☒ Project Readiness
- ☒ Multiple Category Benefit and Bundling Opportunities

NEW OR EXISTING

- ☒ New Infrastructure / Facility
- ☒ Existing Infrastructure / Facility

MEASURE Z PAVEMENT REHABILITATION AND PEDESTRIAN FACILITIES IMPROVEMENT PROGRAM

PROJECT NUMBER 9026 **COUNCIL WARD** All Wards
PROJECT CATEGORY Transportation
PROJECT LOCATION Citywide

PROJECT DESCRIPTION
This program provides the asphalt concrete pavement rehabilitation of arterial and minor streets throughout the City. This program also includes removal and reconstruction of non-compliant pedestrian ramps and repair of curbs, gutters, driveways, and sidewalks adjacent to the street to provide proper drainage, ADA compliance, and better ride quality. Other improvements will include pedestrian improvements including new sidewalk and minor widening when required.

PROJECT STATUS
This is an ongoing project to complete pavement rehabilitation of arterial and minor streets throughout the City.

OPERATING BUDGET IMPACT
There are no operating budget impacts anticipated with the completion of this project.

PROJECT FUNDING OVERVIEW

Total Project Cost	Prior Years Funding	Five Year Plan	REMAINING NEEDED
Ongoing	$0	$14,375,000	Ongoing

PROPOSED 2-YEAR BUDGET AND 5-YEAR PLAN

Fund	Funding Source	2018/19	2019/20	2020/21	2021/22	2022/23	TOTAL
420	Measure Z – Capital	$2,875,000	$2,875,000	$2,875,000	$2,875,000	$2,875,000	$14,375,000
	TOTAL	$2,875,000	$2,875,000	$2,875,000	$2,875,000	$2,875,000	$14,375,000

PRIORITIZATION CATEGORIES

- ☒ Risk to Health, Safety and Environment
- ☒ Regulatory or Mandated Requirements
- ☐ Asset Condition, Annual Recurring Costs and Asset Longevity
- ☐ Community Investment and Economic Prosperity
- ☒ Level and Quality of Service
- ☐ Sustainability and Conservation
- ☒ Funding Availability
- ☒ Project Readiness
- ☒ Multiple Category Benefit and Bundling Opportunities

NEW OR EXISTING

- ☒ New Infrastructure / Facility
- ☒ Existing Infrastructure / Facility

SB-1 PAVEMENT REHABILITATION, MAINTENANCE, AND SAFETY IMPROVEMENTS PROGRAM

PROJECT NUMBER 9028 **COUNCIL WARD** All Wards
PROJECT CATEGORY Transportation
PROJECT LOCATION Citywide

PROJECT DESCRIPTION
This program provides the asphalt concrete pavement rehabilitation of arterial and minor streets throughout the City. This program also includes removal and reconstruction of non-compliant pedestrian ramps and repair of curbs, gutters, driveways, and sidewalks adjacent to the street to provide proper drainage, ADA compliance, and better ride quality. Other improvements will include traffic safety improvements including HAWK signal pedestrian signals, crosswalk improvements, and new traffic signal installations.

PROJECT STATUS
This is an ongoing project to provide pavement rehabilitation for arterial and minor streets throughout the City.

OPERATING BUDGET IMPACT
This is an ongoing project and there are no anticipated operating budget impacts.

PROJECT FUNDING OVERVIEW

Total Project Cost	Prior Years Funding	Five Year Plan	REMAINING NEEDED
Ongoing	$0	$27,363,546	Ongoing

PROPOSED 2-YEAR BUDGET AND 5-YEAR PLAN

Fund	Funding Source	2018/19	2019/20	2020/21	2021/22	2022/23	TOTAL
230	Gas Tax	$5,426,724	$5,426,724	$5,503,366	$5,503,366	$5,503,366	$27,363,546
	TOTAL	$5,426,724	$5,426,724	$5,503,366	$5,503,366	$5,503,366	$27,363,546

CITY OF RIVERSIDE

CAPITAL IMPROVEMENT PROGRAM

WATER

NOTES

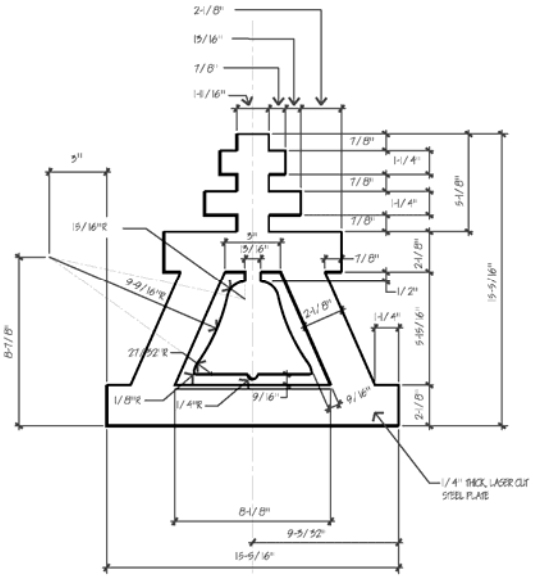
2-1/8"
15/16"
7/8"
1-11/16"
3"
15/16"R
9-9/16"R
27-9/32"R
1/8"R
1/4"R
9/16"
9/16"
7/8"
1-1/4"
7/8"
1-1/4"
7/8"
5-1/8"
15/16"
7/8"
2-1/8"
1/2"
2-1/8"
1-1/4"
5-15/16"
2-1/8"
15-5/16"
8-7/8"
1/4" THICK, LASER CUT STEEL PLATE
8-1/8"
9-5/32"
15-5/16"

Project Category Overview: Water

Introduction

The Public Utilities Department is responsible for providing water service to customers with a service area population of approximately 327,000, encompassing 74 square miles.

Water service is provided to 65,400 metered customers. The Department maintains its own distribution system, which contains approximately 1,000 miles of pipeline ranging from 2 inches to 72 inches in diameter, 56 domestic wells, 16 active reservoirs, with a capacity of 109 million gallons (equivalent to an emergency supply of 3 days), and 14 miles of canals in Riverside. The Department is responsible for providing adequate water supplies to its customers at the lowest possible cost. This includes assuring continued access to water resources while maintaining a high quality water supply and a reliable water distribution system. The Department is committed to keeping Riverside "water independent" and free of reliance on imported water supplies while ensuring improved reliability.

Proposed Two-Year Budget and Five-Year Plan

The five-year Capital Improvement Program (CIP) for the water system of $129,113,000 is required to implement the ten-year water infrastructure plan, which includes maintaining the most vital infrastructure.

This CIP is supported by the Water Utility's proposed rate plan and addresses the need to replace and refurbish the most vital portions of Riverside's aging water infrastructure from Fiscal Year 2018/19 through Fiscal Year 2022/23. It includes funding to replace existing leaking and/or undersized mains, refurbish wells and booster stations, expand the use of recycled water, and participate in enhanced recharge of the Seven Oaks Dam Conservation Project. Additional funding is also allocated for the implementation of various

Project Category Overview: Water

technology, security and system automation tools, and applications to improve cybersecurity and overall efficiency.

Major Project Type:

Distribution Facilities – Water distribution and distribution network edge equipment to deliver and meter water throughout system.

Distribution Pipelines – Neighborhood pipelines 6" to 12" diameter for water service and fire fighting.

Reservoir Projects – System storage for emergency, operational and system efficiency improvements.

System Automation – Technology, security and system automation tools and applications to improve cyber security and overall efficiency.

Transmission Pipelines – Arterial pipelines 16" to 72" diameter for water supply from San Bernardino and Riverside basins and in system transmission.

Water Supply – Projects to increase water supply through direct supplement and augmentation of groundwater basins.

Well Projects – Water supply wells in Riverside and San Bernardino groundwater basins.

Key Revenues and Funding Sources

Table 1: Funding Sources

Fund	Funding Source	Proposed 2018/19	Proposed 2019/20	Proposed 2020/21	Proposed 2021/22	Proposed 2022/23	Total
520	Water Fund	22,700,651	18,816,266	33,854,339	23,652,419	30,089,738	$129,113,413
	TOTAL	**$22,700,651**	**$18,816,266**	**$33,854,339**	**$23,652,419**	**$30,089,738**	**$129,113,413**

The five-year Water CIP will be supported by various funding sources. The majority of the CIP, $95.2 million will be funded by bond proceeds. Approximately $4.0 million will be funded from reserves, approximately $24.8 million will be funded from rates, and $5.1 million will be funded from contributions in aid of construction.

Project Category Overview: Water

Projects by Major Type of Improvement

Table 2: Schedule of Projects by Major Type of Improvement

Project Type/Project Name	Proposed 2018/19	Proposed 2019/20	Proposed 2020/21	Proposed 2021/22	Proposed 2022/23	Total
Distribution Facilities						
Facility Rehabilitation Program	899,140	326,388	335,690	345,257	532,646	$2,439,121
Meters	846,250	870,368	895,173	920,686	946,925	$4,479,402
Pump Station Replacements	-	1,087,960	2,237,934	1,150,857	-	$4,476,751
Total Distribution Facilities	**$1,745,390**	**$2,284,716**	**$3,468,797**	**$2,416,800**	**$1,479,571**	**$11,395,274**
Distribution Pipelines						
Distribution System Facilities Replacements	1,496,093	1,500,000	1,849,532	1,902,243	1,956,457	$8,704,325
Hydrant Check Valves	50,000	50,000	97,916	100,707	103,577	$402,200
Main Replacements Program	2,801,087	3,807,860	5,650,782	6,329,715	7,693,769	$26,283,213
System Expansion	1,300,000	1,377,491	1,734,262	1,783,689	1,834,524	$8,029,966
Water Stock	10,000	10,000	10,880	11,190	11,509	$53,579
Total Distribution Pipelines	**$5,657,180**	**$6,745,351**	**$9,343,372**	**$10,127,544**	**$11,599,836**	**$43,473,283**
Reservoir Projects						
Facility Rehabilitation Program	-	-	559,484	-	591,828	$1,151,312
Total Reservoir Projects	**$0**	**$0**	**$559,484**	**$0**	**$591,828**	**$1,151,312**
System Automation						
Advanced Metering Infrastructure	-	2,339,114	2,349,830	1,979,475	1,420,388	$8,088,807
Distribution Automation/Reliability	-	-	604,242	161,120	591,828	$1,357,190
Land Mobile Radio	-	-	-	322,240	-	$322,240
Mobile Applications	-	-	-	-	503,054	$503,054
Network Communication System	846,250	870,368	223,793	230,171	710,194	$2,880,776
Operational Technology Governance	118,475	121,851	125,325	128,896	231,998	$726,545
SCADA Upgrade & System Automation	-	652,776	671,380	920,686	946,925	$3,191,767
Work, Asset, & Inventory Mgmt System	-	-	-	-	603,665	$603,665
Total System Automation	**$964,725**	**$3,984,109**	**$3,974,570**	**$3,742,588**	**$5,008,052**	**$17,674,044**
Transmission Pipelines						
Transmission Mains	-	380,785	391,638	805,600	828,560	$2,406,583
Transmission Mains	5,341,952	1,069,465	9,962,161	5,409,029	5,492,167	$27,274,774
Total Transmission Pipelines	**$5,341,952**	**$1,450,250**	**$10,353,799**	**$6,214,629**	**$6,320,727**	**$29,681,357**
Water Supply						
Recycled Water Projects	3,702,343	-	-	-	-	$3,702,343
Seven Oaks Dam Conservation Projects	2,115,624	2,175,920	2,797,417	-	-	$7,088,961
Total Water Supply	**$5,817,967**	**$2,175,920**	**$2,797,417**	**$0**	**$0**	**$10,791,304**
Well Projects						
Facility Rehabilitation Program	1,586,718	543,980	559,483	575,429	591,828	$3,857,438
Potable/Irrigation Well Replacement	1,586,719	1,631,940	2,797,417	575,429	4,497,896	$11,089,401

Project Category Overview: Water

Project Type/Project Name	Proposed 2018/19	Proposed 2019/20	Proposed 2020/21	Proposed 2021/22	Proposed 2022/23	Total
Well Projects (cont.)						
Total Well Projects	**$3,173,437**	**$2,175,920**	**$3,356,900**	**$1,150,858**	**$5,089,724**	**$14,946,839**
TOTAL	**$22,700,651**	**$18,816,266**	**$33,854,339**	**$23,652,419**	**$30,089,738**	**$129,113,413**

Unfunded Projects

Table 3: Top Unfunded Projects by Priority

Project Name	Estimated Project Cost	Unfunded Amount
1. Victoria Ave Transmission Main	5,000,000	5,000,000
2. North Waterman Treatment Plant	14,000,000	14,000,000
3. Local Storm Water Capture Projects	12,000,000	12,000,000
4. GIS Upgrades/Integrations, Customer Engagement Portal & Other System Automation	6,216,305	6,216,305
5. Advanced Metering Infrastructure	16,247,070	7,698,263
TOTAL	**$53,463,375**	**$44,914,568**

Water Utility identified five capital projects without an identified funding source.

Project Category Overview: Water

Project Map

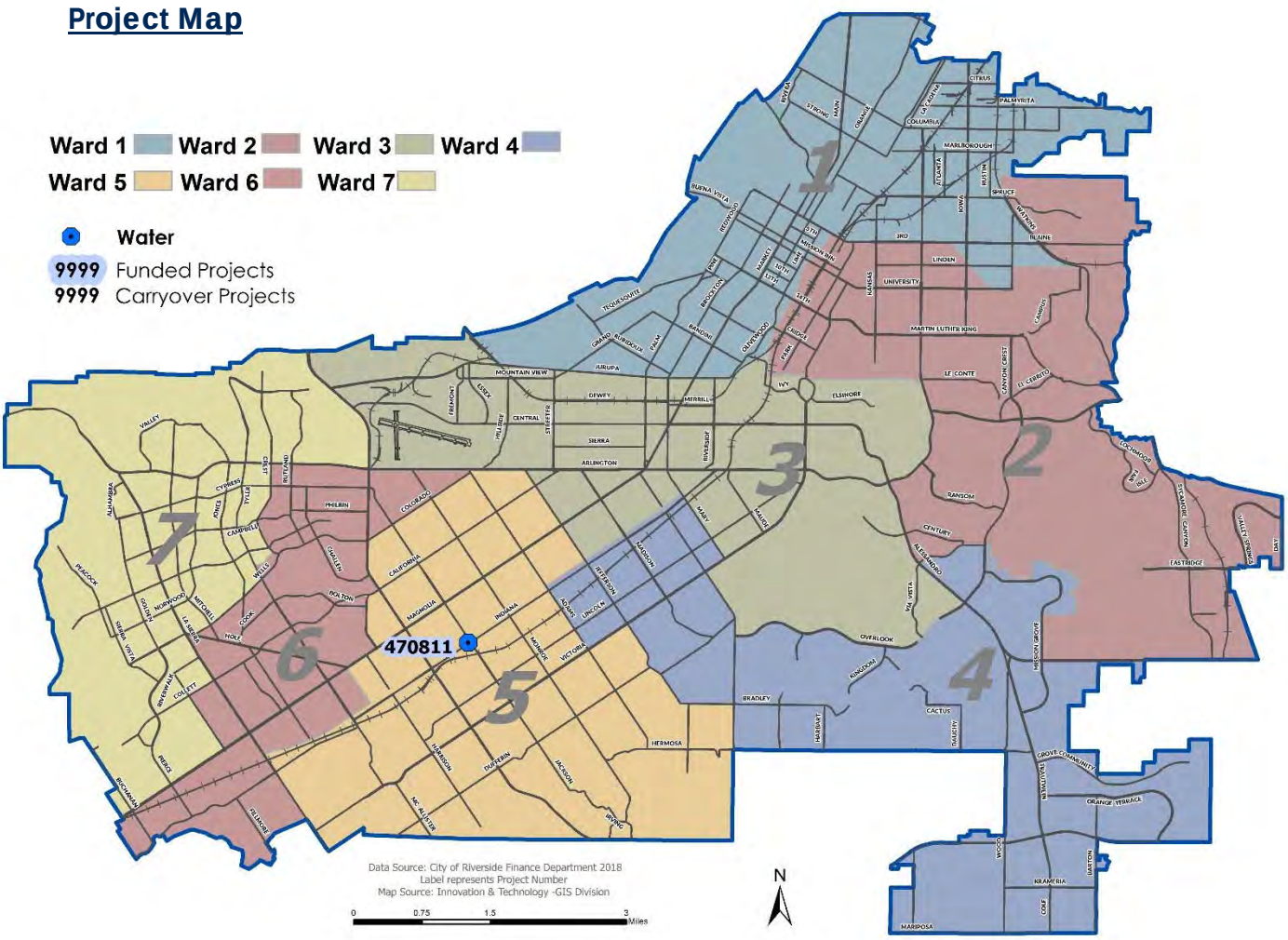

Note: This map includes all active and new capital improvement projects. Ongoing and citywide projects are not included on the map. To view additional information and detailed maps, please visit the City's website at https://riverside.openbook.questica.com.

Graph 1: Distribution by Ward

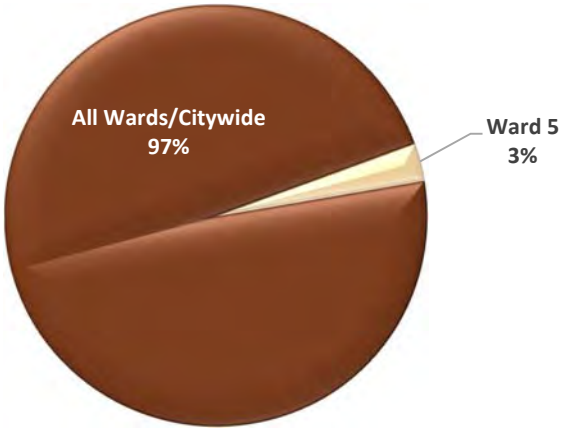

Ward	Five-Year Total
Ward 1	-
Ward 2	-
Ward 3	-
Ward 4	-
Ward 5	3,702,343
Ward 6	-
Ward 7	-
All Wards	125,411,070
Total	**$129,113,413**

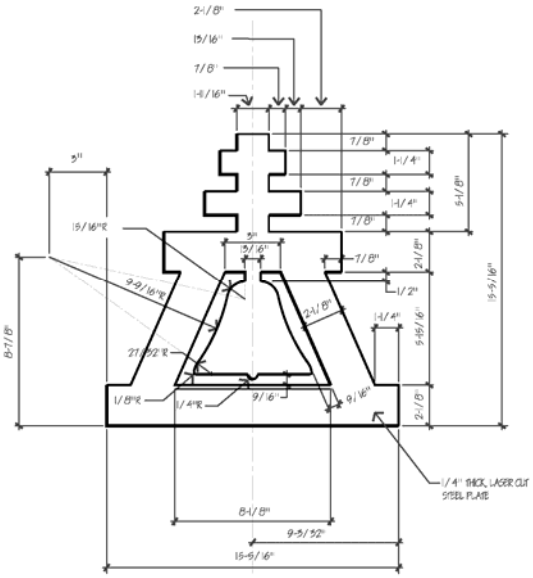
2-1/8"
15/16"
7/8"
1-11/16"
3"
15/16"R
9-9/16"R
27-9/32"R
1/8"R
1/4"R
9/16"
9/16"
7/8"
1-1/4"
7/8"
1-1/4"
7/8"
5-1/8"
3"
15/16"
7/8"
2-1/8"
1/2"
2-1/8"
1-1/4"
5-15/16"
2-1/8"
15-9/16"
8-7/8"
1/4" THICK, LASER CUT STEEL PLATE
8-1/8"
9-9/32"
15-9/16"

PRIORITIZATION CATEGORIES

- ☒ Risk to Health, Safety and Environment
- ☐ Regulatory or Mandated Requirements
- ☒ Asset Condition, Annual Recurring Costs and Asset Longevity
- ☒ Community Investment and Economic Prosperity
- ☒ Level and Quality of Service
- ☐ Sustainability and Conservation
- ☒ Funding Availability
- ☒ Project Readiness
- ☒ Multiple Category Benefit and Bundling Opportunities

NEW OR EXISTING

- ☒ New Infrastructure / Facility
- ☐ Existing Infrastructure / Facility

DISTRIBUTION AUTOMATION/RELIABILITY

PROJECT NUMBER	470655	**COUNCIL WARD**	All Wards
PROJECT CATEGORY	Water Utility		
PROJECT LOCATION	Citywide		

PROJECT DESCRIPTION

Provides for the design and installation of remote sensing devices and remotely controlled equipment on the Riverside water system. This new technology equipment remotely monitors the water system and reports information immediately to water control center. Remotely controlled equipment reduces personnel costs and improves response times to system disturbances.

PROJECT STATUS

Ongoing purchase and installation of equipment for remote monitoring of the water production and distribution system.

OPERATING BUDGET IMPACT

Not identifiable for ongoing project.

PROJECT FUNDING OVERVIEW

Total Project Cost	Prior Years Funding *	Five Year Plan	REMAINING NEEDED
Ongoing	$0	$1,357,190	Ongoing

PROPOSED 2-YEAR BUDGET AND 5-YEAR PLAN

Fund	Funding Source	2018/19	2019/20	2020/21	2021/22	2022/23	TOTAL
520	Water Fund	-	-	$604,242	$161,120	$591,828	$1,357,190
	TOTAL	**$0**	**$0**	**$604,242**	**$161,120**	**$591,828**	**$1,357,190**

* Prior Years Funding includes appropriations and adjustments to appropriations, from July 1994 to March 2018

PRIORITIZATION CATEGORIES

- ☐ Risk to Health, Safety and Environment
- ☐ Regulatory or Mandated Requirements
- ☐ Asset Condition, Annual Recurring Costs and Asset Longevity
- ☒ Community Investment and Economic Prosperity
- ☒ Level and Quality of Service
- ☐ Sustainability and Conservation
- ☒ Funding Availability
- ☒ Project Readiness
- ☒ Multiple Category Benefit and Bundling Opportunities

NEW OR EXISTING

- ☒ New Infrastructure / Facility
- ☐ Existing Infrastructure / Facility

SYSTEM EXPANSION

PROJECT NUMBER 470701
COUNCIL WARD All Wards
PROJECT CATEGORY Water Utility
PROJECT LOCATION Citywide

PROJECT DESCRIPTION
This is an ongoing program that includes design and construction of new water system infrastructure (water mains, valves, fire hydrants and services) to serve new residential and commercial developments.

PROJECT STATUS
Ongoing program which designs and constructs new water infrastructure as needed to support development within the city service area.

OPERATING BUDGET IMPACT
Not identifiable for ongoing project.

PROJECT FUNDING OVERVIEW

Total Project Cost	Prior Years Funding *	Five Year Plan	REMAINING NEEDED
Ongoing	$32,982,628	$8,029,966	Ongoing

PROPOSED 2-YEAR BUDGET AND 5-YEAR PLAN

Fund	Funding Source	2018/19	2019/20	2020/21	2021/22	2022/23	TOTAL
520	Water Fund	$1,300,000	$1,377,491	$1,734,262	$1,783,689	$1,834,524	$8,029,966
	TOTAL	**$1,300,000**	**$1,377,491**	**$1,734,262**	**$1,783,689**	**$1,834,524**	**$8,029,966**

* Prior Years Funding includes appropriations and adjustments to appropriations, from July 1994 to March 2018

PRIORITIZATION CATEGORIES

- ☐ Risk to Health, Safety and Environment
- ☐ Regulatory or Mandated Requirements
- ☒ Asset Condition, Annual Recurring Costs and Asset Longevity
- ☒ Community Investment and Economic Prosperity
- ☒ Level and Quality of Service
- ☐ Sustainability and Conservation
- ☒ Funding Availability
- ☒ Project Readiness
- ☒ Multiple Category Benefit and Bundling Opportunities

NEW OR EXISTING

- ☐ New Infrastructure / Facility
- ☒ Existing Infrastructure / Facility

METERS

PROJECT NUMBER 470702
PROJECT CATEGORY Water Utility
PROJECT LOCATION Citywide
COUNCIL WARD All Wards

PROJECT DESCRIPTION
This is an ongoing program that involves replacement of approximately 4,000 small meters and replacement or refurbishment of over 80 large meters per year.

PROJECT STATUS
Ongoing purchase and installation of meter equipment which contributes to fulfilling our obligation to serve electric load requirements within the city service area.

OPERATING BUDGET IMPACT
Not identifiable for ongoing project.

PROJECT FUNDING OVERVIEW

Total Project Cost	Prior Years Funding *	Five Year Plan	REMAINING NEEDED
Ongoing	$8,271,645	$4,479,402	Ongoing

PROPOSED 2-YEAR BUDGET AND 5-YEAR PLAN

Fund	Funding Source	2018/19	2019/20	2020/21	2021/22	2022/23	TOTAL
520	Water Fund	$846,250	$870,368	$895,173	$920,686	$946,925	$4,479,402
	TOTAL	$846,250	$870,368	$895,173	$920,686	$946,925	$4,479,402

* Prior Years Funding includes appropriations and adjustments to appropriations, from July 1994 to March 2018

PRIORITIZATION CATEGORIES

- ☐ Risk to Health, Safety and Environment
- ☐ Regulatory or Mandated Requirements
- ☐ Asset Condition, Annual Recurring Costs and Asset Longevity
- ☒ Community Investment and Economic Prosperity
- ☐ Level and Quality of Service
- ☐ Sustainability and Conservation
- ☒ Funding Availability
- ☐ Project Readiness
- ☒ Multiple Category Benefit and Bundling Opportunities

NEW OR EXISTING

- ☐ New Infrastructure / Facility
- ☐ Existing Infrastructure / Facility

WATER STOCK

PROJECT NUMBER 470705
COUNCIL WARD All Wards
PROJECT CATEGORY Water Utility
PROJECT LOCATION Citywide

PROJECT DESCRIPTION
This is an ongoing program that involves the purchase of outstanding shares of the Gage Canal Co. water stock as they become available.

PROJECT STATUS
Ongoing program to purchase outstanding shares of the Gage Canal Co. water stock as they become available.

OPERATING BUDGET IMPACT
Not identifiable for ongoing project.

PROJECT FUNDING OVERVIEW

Total Project Cost	Prior Years Funding *	Five Year Plan	REMAINING NEEDED
Ongoing	$1,378,967	$53,579	Ongoing

PROPOSED 2-YEAR BUDGET AND 5-YEAR PLAN

Fund	Funding Source	2018/19	2019/20	2020/21	2021/22	2022/23	TOTAL
520	Water Fund	$10,000	$10,000	$10,880	$11,190	$11,509	$53,579
	TOTAL	$10,000	$10,000	$10,880	$11,190	$11,509	$53,579

* Prior Years Funding includes appropriations and adjustments to appropriations, from July 1994 to March 2018

PRIORITIZATION CATEGORIES

- ☐ Risk to Health, Safety and Environment
- ☐ Regulatory or Mandated Requirements
- ☒ Asset Condition, Annual Recurring Costs and Asset Longevity
- ☒ Community Investment and Economic Prosperity
- ☒ Level and Quality of Service
- ☐ Sustainability and Conservation
- ☒ Funding Availability
- ☒ Project Readiness
- ☒ Multiple Category Benefit and Bundling Opportunities

NEW OR EXISTING

- ☐ New Infrastructure / Facility
- ☒ Existing Infrastructure / Facility

DISTRIBUTION SYSTEM FACILITIES REPLACEMENTS

PROJECT NUMBER 470706
COUNCIL WARD All Wards
PROJECT CATEGORY Water Utility
PROJECT LOCATION Citywide

PROJECT DESCRIPTION
This is an ongoing program to replace old and inoperable water appurtenances including water services, fire hydrants, valves, air valves and other inoperable or damaged items.

PROJECT STATUS
Ongoing replacement of water appurtenances which supports the Department's Asset Management program.

OPERATING BUDGET IMPACT
Not identifiable for ongoing project.

PROJECT FUNDING OVERVIEW

Total Project Cost	Prior Years Funding *	Five Year Plan	REMAINING NEEDED
Ongoing	$18,324,963	$8,704,325	Ongoing

PROPOSED 2-YEAR BUDGET AND 5-YEAR PLAN

Fund	Funding Source	2018/19	2019/20	2020/21	2021/22	2022/23	TOTAL
520	Water Fund	$1,496,093	$1,500,000	$1,849,532	$1,902,243	$1,956,457	$8,704,325
	TOTAL	**$1,496,093**	**$1,500,000**	**$1,849,532**	**$1,902,243**	**$1,956,457**	**$8,704,325**

* Prior Years Funding includes appropriations and adjustments to appropriations, from July 1994 to March 2018

PRIORITIZATION CATEGORIES

- ☒ Risk to Health, Safety and Environment
- ☐ Regulatory or Mandated Requirements
- ☐ Asset Condition, Annual Recurring Costs and Asset Longevity
- ☒ Community Investment and Economic Prosperity
- ☒ Level and Quality of Service
- ☐ Sustainability and Conservation
- ☒ Funding Availability
- ☒ Project Readiness
- ☒ Multiple Category Benefit and Bundling Opportunities

NEW OR EXISTING

- ☐ New Infrastructure / Facility
- ☒ Existing Infrastructure / Facility

MAIN REPLACEMENTS PROGRAM

PROJECT NUMBER 470707
COUNCIL WARD All Wards
PROJECT CATEGORY Water Utility
PROJECT LOCATION Citywide

PROJECT DESCRIPTION
This is an ongoing program that involves the design and construction of various water distribution mains to replace high priority leaking and undersized water mains throughout the water system.

PROJECT STATUS
Ongoing replacement of water mains to replace aged and leaking mains.

OPERATING BUDGET IMPACT
Not identifiable for ongoing project.

PROJECT FUNDING OVERVIEW

Total Project Cost	Prior Years Funding *	Five Year Plan	REMAINING NEEDED
Ongoing	$107,777,427	$26,283,213	Ongoing

PROPOSED 2-YEAR BUDGET AND 5-YEAR PLAN

Fund	Funding Source	2018/19	2019/20	2020/21	2021/22	2022/23	TOTAL
520	Water Fund	$2,801,087	$3,807,860	$5,650,782	$6,329,715	$7,693,769	$26,283,213
	TOTAL	$2,801,087	$3,807,860	$5,650,782	$6,329,715	$7,693,769	$26,283,213

* Prior Years Funding includes appropriations and adjustments to appropriations, from July 1994 to March 2018

PRIORITIZATION CATEGORIES

- ☒ Risk to Health, Safety and Environment
- ☐ Regulatory or Mandated Requirements
- ☒ Asset Condition, Annual Recurring Costs and Asset Longevity
- ☒ Community Investment and Economic Prosperity
- ☒ Level and Quality of Service
- ☐ Sustainability and Conservation
- ☒ Funding Availability
- ☒ Project Readiness
- ☒ Multiple Category Benefit and Bundling Opportunities

NEW OR EXISTING

- ☐ New Infrastructure / Facility
- ☒ Existing Infrastructure / Facility

TRANSMISSION MAINS

PROJECT NUMBER 470735
PROJECT CATEGORY Water Utility
PROJECT LOCATION Citywide
COUNCIL WARD 3, 4, 5 and 6

PROJECT DESCRIPTION
This is an ongoing program that involves the design and construction of water transmission mains to replace Techite pipe, and aged and undersized existing transmission mains throughout the water system.

PROJECT STATUS
Ongoing replacement of water transmission mains to replace Techite pipeline, and aged and undersized transmission mains.

OPERATING BUDGET IMPACT
Not identifiable for ongoing project.

PROJECT FUNDING OVERVIEW

Total Project Cost	Prior Years Funding *	Five Year Plan	REMAINING NEEDED
Ongoing	$16,939,121	$29,681,357	Ongoing

PROPOSED 2-YEAR BUDGET AND 5-YEAR PLAN

Fund	Funding Source	2018/19	2019/20	2020/21	2021/22	2022/23	TOTAL
520	Water Fund	$5,341,952	$1,450,250	$10,353,799	$6,214,629	$6,320,727	$29,681,357
	TOTAL	**$5,341,952**	**$1,450,250**	**$10,353,799**	**$6,214,629**	**$6,320,727**	**$29,681,357**

* Prior Years Funding includes appropriations and adjustments to appropriations, from July 1994 to March 2018

PRIORITIZATION CATEGORIES

- ☒ Risk to Health, Safety and Environment
- ☐ Regulatory or Mandated Requirements
- ☒ Asset Condition, Annual Recurring Costs and Asset Longevity
- ☒ Community Investment and Economic Prosperity
- ☒ Level and Quality of Service
- ☐ Sustainability and Conservation
- ☒ Funding Availability
- ☐ Project Readiness
- ☒ Multiple Category Benefit and Bundling Opportunities

NEW OR EXISTING

- ☒ New Infrastructure / Facility
- ☒ Existing Infrastructure / Facility

PUMP STATION REPLACEMENTS

PROJECT NUMBER 470802
COUNCIL WARD All Wards
PROJECT CATEGORY Water Utility
PROJECT LOCATION Citywide

PROJECT DESCRIPTION
This is an ongoing program that involves the design and construction of pump stations to replace or rehabilitate existing deficient and aged pump stations throughout the water system.

PROJECT STATUS
Ongoing program to replace or rehabilitate existing pump stations which are deficient or aged based on priority.

OPERATING BUDGET IMPACT
Not identifiable for ongoing project.

PROJECT FUNDING OVERVIEW

Total Project Cost	Prior Years Funding *	Five Year Plan	REMAINING NEEDED
Ongoing	$7,819,149	$4,476,751	Ongoing

PROPOSED 2-YEAR BUDGET AND 5-YEAR PLAN

Fund	Funding Source	2018/19	2019/20	2020/21	2021/22	2022/23	TOTAL
520	Water Fund	-	$1,087,960	$2,237,934	$1,150,857	-	$4,476,751
	TOTAL	**$0**	**$1,087,960**	**$2,237,934**	**$1,150,857**	**$0**	**$4,476,751**

* Prior Years Funding includes appropriations and adjustments to appropriations, from July 1994 to March 2018

PRIORITIZATION CATEGORIES

- ☒ Risk to Health, Safety and Environment
- ☐ Regulatory or Mandated Requirements
- ☒ Asset Condition, Annual Recurring Costs and Asset Longevity
- ☒ Community Investment and Economic Prosperity
- ☒ Level and Quality of Service
- ☐ Sustainability and Conservation
- ☒ Funding Availability
- ☒ Project Readiness
- ☒ Multiple Category Benefit and Bundling Opportunities

NEW OR EXISTING

- ☐ New Infrastructure / Facility
- ☒ Existing Infrastructure / Facility

FACILITY REHABILITATION PROGRAM

PROJECT NUMBER 470803
COUNCIL WARD All Wards
PROJECT CATEGORY Water Utility
PROJECT LOCATION Citywide

PROJECT DESCRIPTION
This is an ongoing program that involves the rehabilitation of existing water facilities including pumps, motors, wells, reservoirs, canals, facility automation, site security and site landscaping.

PROJECT STATUS
Ongoing rehabilitation/replacement of existing water facilities which support the Department's Asset Management program.

OPERATING BUDGET IMPACT
Not identifiable for ongoing project.

PROJECT FUNDING OVERVIEW

Total Project Cost	Prior Years Funding *	Five Year Plan	REMAINING NEEDED
Ongoing	$39,316,897	$7,447,871	Ongoing

PROPOSED 2-YEAR BUDGET AND 5-YEAR PLAN

Fund	Funding Source	2018/19	2019/20	2020/21	2021/22	2022/23	TOTAL
520	Water Fund	$2,485,858	$870,368	$1,454,657	$920,686	$1,716,302	$7,447,871
	TOTAL	$2,485,858	$870,368	$1,454,657	$920,686	$1,716,302	$7,447,871

* Prior Years Funding includes appropriations and adjustments to appropriations, from July 1994 to March 2018

PRIORITIZATION CATEGORIES

- ☐ Risk to Health, Safety and Environment
- ☐ Regulatory or Mandated Requirements
- ☐ Asset Condition, Annual Recurring Costs and Asset Longevity
- ☒ Community Investment and Economic Prosperity
- ☒ Level and Quality of Service
- ☒ Sustainability and Conservation
- ☒ Funding Availability
- ☒ Project Readiness
- ☒ Multiple Category Benefit and Bundling Opportunities

NEW OR EXISTING

- ☒ New Infrastructure / Facility
- ☐ Existing Infrastructure / Facility

RECYCLED WATER (JACKSON ST. PHASE I – FACILITIES AND SITE CONVERSIONS)

PROJECT NUMBER 470811 **COUNCIL WARD** 5
PROJECT CATEGORY Water Utility
PROJECT LOCATION Various

PROJECT DESCRIPTION
Provides for the design and construction of necessary facilities to produce and pump recycled water at the City's Regional Water Quality Control Plant in addition to the on-site recycled water infrastructure and retrofit work to convert customers over to recycled water use.

PROJECT STATUS
Pipeline construction is in progress and is expected to be completed by late summer 2018. Customer site conversion work will start in summer/fall of 2018.

OPERATING BUDGET IMPACT
Operational impacts are currently being assessed.

PROJECT FUNDING OVERVIEW

Total Project Cost	Prior Years Funding *	Five Year Plan	REMAINING NEEDED
$12,741,343	$9,039,000	$3,702,343	$0

PROPOSED 2-YEAR BUDGET AND 5-YEAR PLAN

Fund	Funding Source	2018/19	2019/20	2020/21	2021/22	2022/23	TOTAL
520	Water Fund	$3,702,343	-	-	-	-	$3,702,343
	TOTAL	$3,702,343	$0	$0	$0	$0	$3,702,343

* Prior Years Funding includes appropriations and adjustments to appropriations, from July 1994 to March 2018

PRIORITIZATION CATEGORIES

- ☐ Risk to Health, Safety and Environment
- ☐ Regulatory or Mandated Requirements
- ☐ Asset Condition, Annual Recurring Costs and Asset Longevity
- ☒ Community Investment and Economic Prosperity
- ☐ Level and Quality of Service
- ☒ Sustainability and Conservation
- ☒ Funding Availability
- ☒ Project Readiness
- ☒ Multiple Category Benefit and Bundling Opportunities

NEW OR EXISTING

- ☒ New Infrastructure / Facility
- ☐ Existing Infrastructure / Facility

SEVEN OAKS DAM CONSERVATION – ENHANCED RECHARGE

PROJECT NUMBER 470813 **COUNCIL WARD** All Wards
PROJECT CATEGORY Water Utility
PROJECT LOCATION Four miles northeast of Redlands, near Mentone

PROJECT DESCRIPTION
Multi-agency effort which provides for the design and construction of projects to capture and divert local storm water for groundwater recharge on property owned or controlled by the San Bernardino Valley Water Conservation District to increase available groundwater supplies.

PROJECT STATUS
Phase IA of the Enhanced Recharge Project is under construction and is expected to be completed in summer 2018. Phase IB of the project is expected to begin construction in early 2019.

OPERATING BUDGET IMPACT
Annual maintenance costs are being finalized among the partner agencies in a formal agreement and will be going to each agency for approval.

PROJECT FUNDING OVERVIEW

Total Project Cost	Prior Years Funding *	Five Year Plan	REMAINING NEEDED
$17,271,501	$10,182,540	$7,088,961	$0

PROPOSED 2-YEAR BUDGET AND 5-YEAR PLAN

Fund	Funding Source	2018/19	2019/20	2020/21	2021/22	2022/23	TOTAL
520	Water Fund	$2,115,624	$2,175,920	$2,797,417	-	-	$7,088,961
	TOTAL	$2,115,624	$2,175,920	$2,797,417	$0	$0	$7,088,961

* Prior Years Funding includes appropriations and adjustments to appropriations, from July 1994 to March 2018

PRIORITIZATION CATEGORIES

- ☐ Risk to Health, Safety and Environment
- ☐ Regulatory or Mandated Requirements
- ☐ Asset Condition, Annual Recurring Costs and Asset Longevity
- ☒ Community Investment and Economic Prosperity
- ☐ Level and Quality of Service
- ☒ Sustainability and Conservation
- ☐ Funding Availability
- ☐ Project Readiness
- ☒ Multiple Category Benefit and Bundling Opportunities

NEW OR EXISTING

- ☒ New Infrastructure / Facility
- ☐ Existing Infrastructure / Facility

AQUIFER STORAGE & RECOVERY SYSTEM

PROJECT NUMBER 470814
COUNCIL WARD All Wards
PROJECT CATEGORY Water Utility
PROJECT LOCATION Citywide

PROJECT DESCRIPTION
Interagency project to provide additional water supply through the recharge of water in the Bunker Hill Basin.

PROJECT STATUS
In coordination with outside agencies to reevaluate the project and wait for the completion of the Upper Santa Ana Habitat Conservation Plan.

OPERATING BUDGET IMPACT
Not identifiable for ongoing project.

PROJECT FUNDING OVERVIEW

Total Project Cost	Prior Years Funding *	Five Year Plan	REMAINING NEEDED
Ongoing	$2,561,487	$0	Ongoing

PROPOSED 2-YEAR BUDGET AND 5-YEAR PLAN

Fund	Funding Source	2018/19	2019/20	2020/21	2021/22	2022/23	TOTAL
		-	-	-	-	-	-
	TOTAL	$0	$0	$0	$0	$0	$0

* Prior Years Funding includes appropriations and adjustments to appropriations, from July 1994 to March 2018

PRIORITIZATION CATEGORIES

- ☒ Risk to Health, Safety and Environment
- ☐ Regulatory or Mandated Requirements
- ☒ Asset Condition, Annual Recurring Costs and Asset Longevity
- ☒ Community Investment and Economic Prosperity
- ☒ Level and Quality of Service
- ☐ Sustainability and Conservation
- ☒ Funding Availability
- ☒ Project Readiness
- ☒ Multiple Category Benefit and Bundling Opportunities

NEW OR EXISTING

- ☒ New Infrastructure / Facility
- ☐ Existing Infrastructure / Facility

HYDRANT CHECK VALVES

PROJECT NUMBER 470815
COUNCIL WARD All Wards
PROJECT CATEGORY Water Utility
PROJECT LOCATION Citywide

PROJECT DESCRIPTION
This is an ongoing program to install check valves on critical fire hydrants at various locations throughout the City.

PROJECT STATUS
Ongoing program to purchase and install fire hydrant check valves as needed at critical locations.

OPERATING BUDGET IMPACT
Not identifiable for ongoing project.

PROJECT FUNDING OVERVIEW

Total Project Cost	Prior Years Funding *	Five Year Plan	REMAINING NEEDED
Ongoing	$225,982	$402,200	Ongoing

PROPOSED 2-YEAR BUDGET AND 5-YEAR PLAN

Fund	Funding Source	2018/19	2019/20	2020/21	2021/22	2022/23	TOTAL
520	Water Fund	$50,000	$50,000	$97,916	$100,707	$103,577	$402,200
	TOTAL	$50,000	$50,000	$97,916	$100,707	$103,577	$402,200

* Prior Years Funding includes appropriations and adjustments to appropriations, from July 1994 to March 2018

PRIORITIZATION CATEGORIES

- ☐ Risk to Health, Safety and Environment
- ☐ Regulatory or Mandated Requirements
- ☐ Asset Condition, Annual Recurring Costs and Asset Longevity
- ☒ Community Investment and Economic Prosperity
- ☐ Level and Quality of Service
- ☒ Sustainability and Conservation
- ☐ Funding Availability
- ☐ Project Readiness
- ☒ Multiple Category Benefit and Bundling Opportunities

NEW OR EXISTING

- ☒ New Infrastructure / Facility
- ☐ Existing Infrastructure / Facility

UPPER SANTA ANA RIVER HABITAT CONSERVATION PLAN

PROJECT NUMBER 470819
COUNCIL WARD All Wards
PROJECT CATEGORY Water Utility
PROJECT LOCATION Citywide

PROJECT DESCRIPTION
Interagency project to mitigate the endangered Santa Ana Sucker along with twelve other covered species to allow for construction of water supply projects on a regional scale. This project will also create a mitigation bank to be used by each of the thirteen partner agencies.

PROJECT STATUS
Ongoing coordination with outside agencies to establish a mitigation bank for sensitive wildlife habitat to facilitate construction of water supply projects.

OPERATING BUDGET IMPACT
Not identifiable for ongoing project.

PROJECT FUNDING OVERVIEW

Total Project Cost	Prior Years Funding *	Five Year Plan	REMAINING NEEDED
Ongoing	$325,000	$0	Ongoing

PROPOSED 2-YEAR BUDGET AND 5-YEAR PLAN

Fund	Funding Source	2018/19	2019/20	2020/21	2021/22	2022/23	TOTAL
		-	-	-	-	-	-
	TOTAL	$0	$0	$0	$0	$0	$0

* Prior Years Funding includes appropriations and adjustments to appropriations, from July 1994 to March 2018

PRIORITIZATION CATEGORIES

- ☐ Risk to Health, Safety and Environment
- ☐ Regulatory or Mandated Requirements
- ☐ Asset Condition, Annual Recurring Costs and Asset Longevity
- ☒ Community Investment and Economic Prosperity
- ☒ Level and Quality of Service
- ☐ Sustainability and Conservation
- ☒ Funding Availability
- ☒ Project Readiness
- ☒ Multiple Category Benefit and Bundling Opportunities

NEW OR EXISTING

- ☒ New Infrastructure / Facility
- ☐ Existing Infrastructure / Facility

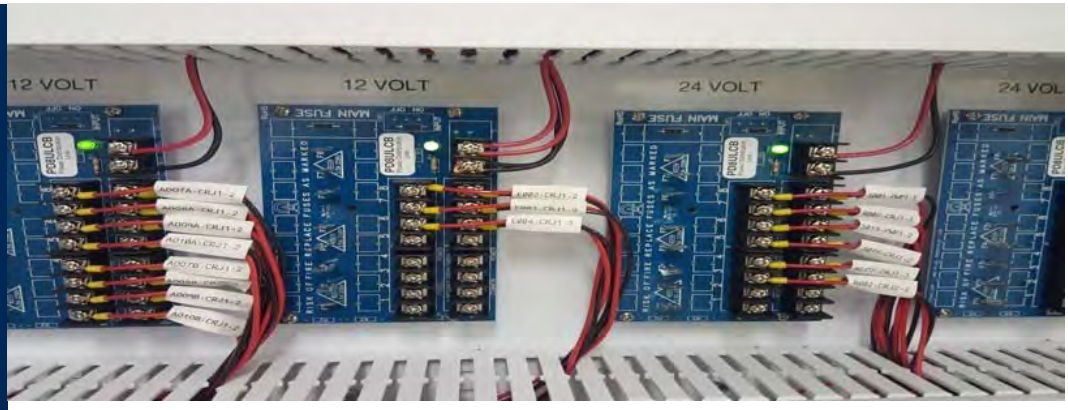

ENTERPRISE OPERATION DATA MGMT SYSTEM

PROJECT NUMBER 470822
COUNCIL WARD All Wards
PROJECT CATEGORY Water Utility
PROJECT LOCATION Citywide

PROJECT DESCRIPTION
ODMS receives data from electric delivery and generation system instrumentation and data communication, storage, and analysis systems. The data will support advanced monitoring and control systems to improve the operational efficiency and capability of the electric delivery systems.

PROJECT STATUS
Year 2 implementation to be completed by July 1, 2018. Cost saving from year 2 will be used for year 3 with approval by Board estimated in June 2018.

OPERATING BUDGET IMPACT
The two-year operating budget and five-year plan include ongoing annual maintenance costs.

PROJECT FUNDING OVERVIEW

Total Project Cost	Prior Years Funding *	Five Year Plan	REMAINING NEEDED
$1,399,528	$1,399,528	$0	$0

PROPOSED 2-YEAR BUDGET AND 5-YEAR PLAN

Fund	Funding Source	2018/19	2019/20	2020/21	2021/22	2022/23	TOTAL
		-	-	-	-	-	-
	TOTAL	$0	$0	$0	$0	$0	$0

* Prior Years Funding includes appropriations and adjustments to appropriations, from July 1994 to March 2018

PRIORITIZATION CATEGORIES

- ☐ Risk to Health, Safety and Environment
- ☐ Regulatory or Mandated Requirements
- ☐ Asset Condition, Annual Recurring Costs and Asset Longevity
- ☒ Community Investment and Economic Prosperity
- ☒ Level and Quality of Service
- ☒ Sustainability and Conservation
- ☐ Funding Availability
- ☐ Project Readiness
- ☒ Multiple Category Benefit and Bundling Opportunities

NEW OR EXISTING

- ☒ New Infrastructure / Facility
- ☒ Existing Infrastructure / Facility

ADVANCED METERING INFRASTRUCTURE

PROJECT NUMBER 470823
COUNCIL WARD All Wards
PROJECT CATEGORY Water Utility
PROJECT LOCATION Citywide

PROJECT DESCRIPTION
Advanced Metering Infrastructure (AMI) and Meter Data Management System to integrate AMI data and support customer facing applications and web integration of Customer Integration System. Delivers automated meter reading resulting in more efficient consumption management and enhanced customer service.

PROJECT STATUS
Two-year system automation project beginning in Fiscal Year 2019/20.

OPERATING BUDGET IMPACT
The two-year operating budget and five-year plan include ongoing annual maintenance costs.

PROJECT FUNDING OVERVIEW

Total Project Cost	Prior Years Funding *	Five Year Plan	REMAINING NEEDED
$16,247,070	$460,000	$8,088,807	**$7,698,263**

PROPOSED 2-YEAR BUDGET AND 5-YEAR PLAN

Fund	Funding Source	2018/19	2019/20	2020/21	2021/22	2022/23	TOTAL
520	Water Fund	$0	$2,339,114	$2,349,830	$1,979,475	$1,420,388	$8,088,807
	TOTAL	**$0**	**$2,339,114**	**$2,349,830**	**$1,979,475**	**$1,420,388**	**$8,088,807**

* Prior Years Funding includes appropriations and adjustments to appropriations, from July 1994 to March 2018

PRIORITIZATION CATEGORIES

- ☐ Risk to Health, Safety and Environment
- ☐ Regulatory or Mandated Requirements
- ☐ Asset Condition, Annual Recurring Costs and Asset Longevity
- ☒ Community Investment and Economic Prosperity
- ☒ Level and Quality of Service
- ☐ Sustainability and Conservation
- ☒ Funding Availability
- ☒ Project Readiness
- ☒ Multiple Category Benefit and Bundling Opportunities

NEW OR EXISTING

- ☐ New Infrastructure / Facility
- ☐ Existing Infrastructure / Facility

OPERATIONAL TECHNOLOGY GOVERNANCE

PROJECT NUMBER 470824 **COUNCIL WARD** All Wards
PROJECT CATEGORY Water Utility
PROJECT LOCATION Citywide

PROJECT DESCRIPTION
Operational Technology planning, management, Internal controls, and cyber & physical security improvements. Oversee RPU's operational technology roadmap to effective plan and execute technology projects over the next 5-10 years, and to continue to strengthen our cyber and physical security programs to ensure the safety and security of RPU systems, equipment, facilities, data and people.

PROJECT STATUS
Equipment and software solutions for cyber and physical security issues identified through new biannual assessments.

OPERATING BUDGET IMPACT
The two-year operating budget and five-year plan include ongoing annual maintenance costs.

PROJECT FUNDING OVERVIEW

Total Project Cost	Prior Years Funding *	Five Year Plan	REMAINING NEEDED
$726,545	$0	$726,545	$0

PROPOSED 2-YEAR BUDGET AND 5-YEAR PLAN

Fund	Funding Source	2018/19	2019/20	2020/21	2021/22	2022/23	TOTAL
520	Water Fund	$118,475	$121,851	$125,325	$128,896	$231,998	$726,545
	TOTAL	$118,475	$121,851	$125,325	$128,896	$231,998	$726,545

* Prior Years Funding includes appropriations and adjustments to appropriations, from July 1994 to March 2018

PRIORITIZATION CATEGORIES

- ☐ Risk to Health, Safety and Environment
- ☐ Regulatory or Mandated Requirements
- ☐ Asset Condition, Annual Recurring Costs and Asset Longevity
- ☒ Community Investment and Economic Prosperity
- ☒ Level and Quality of Service
- ☐ Sustainability and Conservation
- ☒ Funding Availability
- ☒ Project Readiness
- ☒ Multiple Category Benefit and Bundling Opportunities

NEW OR EXISTING

- ☒ New Infrastructure / Facility
- ☐ Existing Infrastructure / Facility

WORK, ASSET, & INVENTORY MGMT SYSTEM

PROJECT NUMBER 470825 **COUNCIL WARD** All Wards
PROJECT CATEGORY Water Utility
PROJECT LOCATION Citywide

PROJECT DESCRIPTION
The Work, Asset and Inventory Mgmt system (WIS) is important not only for controlling and minimizing stock materials on hand, but it is important for its hand-off of materials through the work management system and assigning the cost of materials to assets in the asset management system. The WIS is an integral part of the workflows and information needed by the Work Management System and Asset Management System. Supports management of the Utility's field infrastructure assets (e.g. pipes, pumps, valves, connections, etc.). Includes field work-orders, asset costs and utilization.

PROJECT STATUS
Upgrade to current work, asset and inventory system in 2022.

OPERATING BUDGET IMPACT
The two-year operating budget and five-year plan include ongoing annual maintenance costs.

PROJECT FUNDING OVERVIEW

Total Project Cost	Prior Years Funding *	Five Year Plan	REMAINING NEEDED
$603,665	$0	$603,665	$0

PROPOSED 2-YEAR BUDGET AND 5-YEAR PLAN

Fund	Funding Source	2018/19	2019/20	2020/21	2021/22	2022/23	TOTAL
520	Water Fund	-	-	-	-	$603,665	$603,665
	TOTAL	$0	$0	$0	$0	$603,665	$603,665

* Prior Years Funding includes appropriations and adjustments to appropriations, from July 1994 to March 2018

PRIORITIZATION CATEGORIES

- ☐ Risk to Health, Safety and Environment
- ☐ Regulatory or Mandated Requirements
- ☐ Asset Condition, Annual Recurring Costs and Asset Longevity
- ☒ Community Investment and Economic Prosperity
- ☒ Level and Quality of Service
- ☐ Sustainability and Conservation
- ☒ Funding Availability
- ☒ Project Readiness
- ☒ Multiple Category Benefit and Bundling Opportunities

NEW OR EXISTING

- ☒ New Infrastructure / Facility
- ☐ Existing Infrastructure / Facility

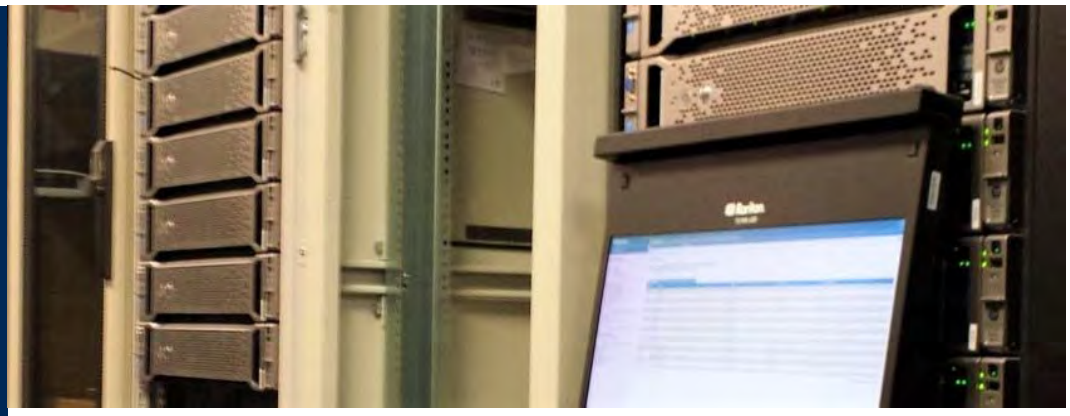

NETWORK COMMUNICATION SYSTEM

PROJECT NUMBER 470826
COUNCIL WARD All Wards
PROJECT CATEGORY Water Utility
PROJECT LOCATION Citywide

PROJECT DESCRIPTION
Network Communications Systems to improve communication backbone and improve system functionality, efficiency, reliability and cybersecurity.

PROJECT STATUS
Project to upgrade and create redundancies in the communication network.

OPERATING BUDGET IMPACT
The two-year operating budget and five-year plan include ongoing annual maintenance costs.

PROJECT FUNDING OVERVIEW

Total Project Cost	Prior Years Funding *	Five Year Plan	REMAINING NEEDED
$2,880,776	$0	$2,880,776	**$0**

PROPOSED 2-YEAR BUDGET AND 5-YEAR PLAN

Fund	Funding Source	2018/19	2019/20	2020/21	2021/22	2022/23	TOTAL
520	Water Fund	$846,250	$870,368	$223,793	$230,171	$710,194	$2,880,776
	TOTAL	**$846,250**	**$870,368**	**$223,793**	**$230,171**	**$710,194**	**$2,880,776**

* Prior Years Funding includes appropriations and adjustments to appropriations, from July 1994 to March 2018

PRIORITIZATION CATEGORIES

- ☒ Risk to Health, Safety and Environment
- ☐ Regulatory or Mandated Requirements
- ☐ Asset Condition, Annual Recurring Costs and Asset Longevity
- ☒ Community Investment and Economic Prosperity
- ☒ Level and Quality of Service
- ☐ Sustainability and Conservation
- ☒ Funding Availability
- ☒ Project Readiness
- ☒ Multiple Category Benefit and Bundling Opportunities

NEW OR EXISTING

- ☒ New Infrastructure / Facility
- ☐ Existing Infrastructure / Facility

LAND MOBILE RADIO

PROJECT NUMBER 470827
PROJECT CATEGORY Water Utility
PROJECT LOCATION Citywide
COUNCIL WARD All Wards

PROJECT DESCRIPTION
Land Mobile Radio (LMR) is a wireless communications system intended for use by terrestrial users in vehicles (mobiles) or on foot (portables). The new system should capitalize on digital technology known as frequency division multiple access (FDMA). The new LMR system will supply new antennas to provide citywide coverage, provide a new dispatcher console, coexist with the current analog LMR system, be based on FDMA technology, support narrow channels, enable trunked modes of operation for both analog and digital modulations, have multiple talk groups, and support private calling. It will also be Advanced Encryption and Data Encryption Standard encrypted and be capable of Over the Air Programming (OTAP).

PROJECT STATUS
Phase II to be started in FY 2021/22

OPERATING BUDGET IMPACT
The two-year operating budget and five-year plan include ongoing annual maintenance costs.

PROJECT FUNDING OVERVIEW

Total Project Cost	Prior Years Funding *	Five Year Plan	REMAINING NEEDED
$322,240	$0	$322,240	**$0**

PROPOSED 2-YEAR BUDGET AND 5-YEAR PLAN

Fund	Funding Source	2018/19	2019/20	2020/21	2021/22	2022/23	TOTAL
520	Water Fund	-	-	-	$322,240	-	$322,240
	TOTAL	**$0**	**$0**	**$0**	**$322,240**	**$0**	**$322,240**

* Prior Years Funding includes appropriations and adjustments to appropriations, from July 1994 to March 2018

PRIORITIZATION CATEGORIES

- ☒ Risk to Health, Safety and Environment
- ☐ Regulatory or Mandated Requirements
- ☐ Asset Condition, Annual Recurring Costs and Asset Longevity
- ☒ Community Investment and Economic Prosperity
- ☒ Level and Quality of Service
- ☐ Sustainability and Conservation
- ☒ Funding Availability
- ☒ Project Readiness
- ☒ Multiple Category Benefit and Bundling Opportunities

NEW OR EXISTING

- ☒ New Infrastructure / Facility
- ☐ Existing Infrastructure / Facility

MOBILE APPLICATIONS

PROJECT NUMBER 470831
COUNCIL WARD All Wards
PROJECT CATEGORY Water Utility
PROJECT LOCATION Citywide

PROJECT DESCRIPTION
Mobile Apps increase operational efficiency and safety by providing real-time information to field personnel when and where they need it; ensure system configuration and status is always known by the personnel operating the system; reduce the need for paper-based maps, plans, and work orders; reduce the as-built record keeping effort; and enable field operation personnel to share real time information with system operators and engineers.

PROJECT STATUS
Implement mobile applications to support work orders and asset management planned in 2022.

OPERATING BUDGET IMPACT
The two-year operating budget and five-year plan include ongoing annual maintenance costs.

PROJECT FUNDING OVERVIEW

Total Project Cost	Prior Years Funding *	Five Year Plan	REMAINING NEEDED
$503,054	$0	$503,054	**$0**

PROPOSED 2-YEAR BUDGET AND 5-YEAR PLAN

Fund	Funding Source	2018/19	2019/20	2020/21	2021/22	2022/23	TOTAL
520	Water Fund	-	-	-	-	$503,054	$503,054
	TOTAL	**$0**	**$0**	**$0**	**$0**	**$503,054**	**$503,054**

* Prior Years Funding includes appropriations and adjustments to appropriations, from July 1994 to March 2018

PRIORITIZATION CATEGORIES

- ☒ Risk to Health, Safety and Environment
- ☐ Regulatory or Mandated Requirements
- ☒ Asset Condition, Annual Recurring Costs and Asset Longevity
- ☒ Community Investment and Economic Prosperity
- ☒ Level and Quality of Service
- ☐ Sustainability and Conservation
- ☒ Funding Availability
- ☒ Project Readiness
- ☒ Multiple Category Benefit and Bundling Opportunities

NEW OR EXISTING

- ☒ New Infrastructure / Facility
- ☒ Existing Infrastructure / Facility

SCADA UPGRADE & SYSTEM AUTOMATION

PROJECT NUMBER 470832
COUNCIL WARD All Wards
PROJECT CATEGORY Water Utility
PROJECT LOCATION Citywide

PROJECT DESCRIPTION
Provides for the necessary upgrades to the water system which monitors and controls operation of the water transmission and distribution 24 hours a day, 365 days a year. This includes physical security upgrades required for regulatory compliance as part of system improvements. Also includes hardware and network upgrades as part of advanced technology improvements.

PROJECT STATUS
Upgrade to current version of Water SCADA system.

OPERATING BUDGET IMPACT
The two-year operating budget and five-year plan include ongoing annual maintenance costs.

PROJECT FUNDING OVERVIEW

Total Project Cost	Prior Years Funding *	Five Year Plan	REMAINING NEEDED
$3,191,767	$0	$3,191,767	**$0**

PROPOSED 2-YEAR BUDGET AND 5-YEAR PLAN

Fund	Funding Source	2018/19	2019/20	2020/21	2021/22	2022/23	TOTAL
520	Water Fund	-	$652,776	$671,380	$920,686	$946,925	$3,191,767
	TOTAL	**$0**	**$652,776**	**$671,380**	**$920,686**	**$946,925**	**$3,191,767**

* Prior Years Funding includes appropriations and adjustments to appropriations, from July 1994 to March 2018

PRIORITIZATION CATEGORIES

- ☐ Risk to Health, Safety and Environment
- ☐ Regulatory or Mandated Requirements
- ☒ Asset Condition, Annual Recurring Costs and Asset Longevity
- ☒ Community Investment and Economic Prosperity
- ☒ Level and Quality of Service
- ☐ Sustainability and Conservation
- ☒ Funding Availability
- ☐ Project Readiness
- ☒ Multiple Category Benefit and Bundling Opportunities

NEW OR EXISTING

- ☒ New Infrastructure / Facility
- ☐ Existing Infrastructure / Facility

POTABLE/IRRIGATION WELL REPLACEMENT

PROJECT NUMBER 470833
COUNCIL WARD All Wards
PROJECT CATEGORY Water Utility
PROJECT LOCATION Citywide

PROJECT DESCRIPTION
This is an ongoing program that involves the construction of new and/or replacement potable/irrigation well facilities.

PROJECT STATUS
Ongoing program to design and construct new wells to replace existing aged or under producing water supply wells.

OPERATING BUDGET IMPACT
Not identifiable for ongoing project.

PROJECT FUNDING OVERVIEW

Total Project Cost	Prior Years Funding *	Five Year Plan	REMAINING NEEDED
Ongoing	$0	$11,089,401	Ongoing

PROPOSED 2-YEAR BUDGET AND 5-YEAR PLAN

Fund	Funding Source	2018/19	2019/20	2020/21	2021/22	2022/23	TOTAL
520	Water Fund	$1,586,719	$1,631,940	$2,797,417	$575,429	$4,497,896	$11,089,401
	TOTAL	**$1,586,719**	**$1,631,940**	**$2,797,417**	**$575,429**	**$4,497,896**	**$11,089,401**

* Prior Years Funding includes appropriations and adjustments to appropriations, from July 1994 to March 2018

NOTES

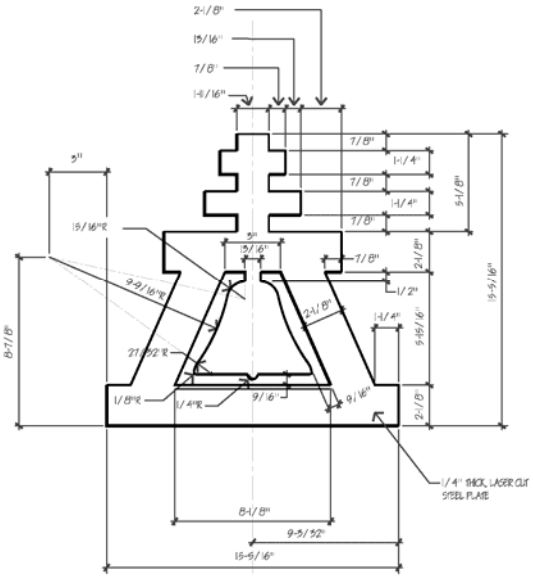
2-1/8"
15/16"
7/8"
1-11/16"
3"
15/16"R
9-9/16"R
8-7/8"
27-9/32"R
1/8"R
1/4"R
9/16"
9/16"
7/8"
1-1/4"
7/8"
1-1/4"
7/8"
5-1/8"
3"
15/16"
7/8"
2-1/8"
1/2"
2-1/8"
1-1/4"
5-15/16"
15-9/16"
2-1/8"
1/4" THICK, LASER CUT STEEL PLATE
8-1/8"
9-9/32"
15-9/16"

CITY OF RIVERSIDE

CAPITAL IMPROVEMENT PROGRAM

Appendix

NOTES

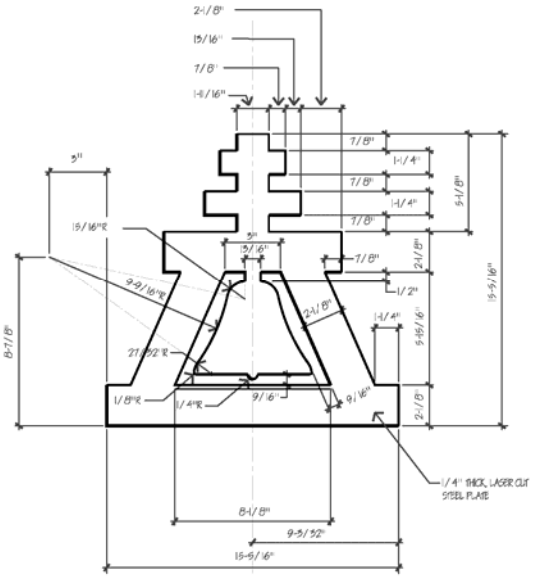
2-1/8"
15/16"
7/8"
1-11/16"
3"
15/16"R
9-9/16"R
8-7/8"
27-52"R
1/8"R
1/4"R
9/16"
9/16"
7/8"
1-1/4"
7/8"
1-1/4"
7/8"
5-1/8"
15/16"
7/8"
2-1/8"
1/2"
2-1/8"
1-1/4"
5-15/16"
2-1/8"
15-5/16"
1/4" THICK, LASER CUT STEEL PLATE
8-1/8"
9-5/32"
15-5/16"

Capital Improvement Program

Unfunded Needs Projects Summary

PRIORITY ORDER	PROJECTS BY CATEGORY	TOTAL ESTIMATED PROJECT COST	UNFUNDED AMOUNT
Airport			
1	AIRPORT - TAXIWAY A REHABILITATION	600,000	500,000
2	*UPGRADE TERMINAL RESTROOMS ADA	60,000	60,000
Total		**660,000**	**560,000**
Municipal Buildings and Facilities			
1	*EASTSIDE LIBRARY - NEW CONSTRUCTION	15,000,000	15,000,000
2	*CORPORATION YARD PARKING LOT REPAVING - PHASE III	1,200,000	1,200,000
3	*HARADA HOUSE - EMERGENCY STRUCTURAL REPAIRS	250,000	250,000
4	*HARADA HOUSE STRUCTURAL UPGRADE	40,000	40,000
5	*EOC DATA CTR SPRINKLER REMOVAL/SEC IMPR	480,000	480,000
6	*POLICE DEPARTMENT AVIATION FUEL TANK REPLACEMENT	220,000	220,000
7	*CITY HALL FAN/HVAC	100,000	100,000
8	*FIRE STATION 11 GENDER MODIFICATIONS	750,000	750,000
9	*CONVENTION CENTER COOLING TOWER REPLACEMENT	57,000	57,000
10	ETHANOL (E85) FUELING STATION	750,000	510,000
11	*ADA FACILITY IMPROVEMENTS - IDENTIFIED CITYWIDE	100,000	100,000
12	*MAGNOLIA SHOPPING CENTER - ROOF	80,000	80,000
13	*MARCY HVAC REPLACEMENT	150,000	150,000
14	*ORANGE TERRACE HVAC UPGRADES/REPLACEMENTS	25,000	25,000
15	*MAGNOLIA STATION ROOF REPAIR	100,000	100,000
16	*POLICE DEPARTMENT MAGNOLIA SPRINKLER LINE REMOVAL AND SECURITY IMPROVEMENTS	40,000	40,000
17	*METROPOLITAN MUSEUM - COPPER ROOF REPAIR	50,000	50,000
18	*FIRE STATION 11, 12, 13 - APPARATUS DOOR REPLACEMENT	80,472	80,472
19	*HERITAGE HOUSE RENOVATION	745,000	745,000
20	*MUSEUM STORAGE COLLECTION FACILITY	8,000,000	8,000,000
21	*PLYMOVENT EXHAUST SYSTEM (ALL - EXCEPT 10 & 11)	612,685	612,685
22	*SECURITY SYSTEMS - ALL	100,000	100,000
23	*CONVENTION CENTER CARPET REPLACEMENT	350,000	350,000
24	*MAGNOLIA SHOPPING CENTER - LIGHTING UPGRADE	25,000	25,000
25	*MAGNOLIA SHOPPING CENTER - PARKING LOT REHAB	25,000	25,000
26	*SECURITY SYSTEM IMPROVEMENTS CITYWIDE - OPERATING	150,000	150,000
27	*1006 DALTON - COMPACTOR SHELVING	200,000	200,000
28	*HARADA HOUSE - ROBINSON HOUSE REHAB	650,000	650,000
29	*HARADA HOUSE RESTORATION AND HISTORIC PRESERVATION	4,000,000	4,000,000
30	*LINCOLN PARKING LOT	100,000	100,000
Total		**34,430,157**	**34,190,157**
Innovation and Technology			
1	WORK-ORDER/ASSET MANAGEMENT SYSTEM MAJOR UPGRADE	3,234,900	3,234,900
2	DATACENTER CAPITAL IMPROVEMENTS	2,046,000	2,046,000
3	DATA NETWORK REPLACEMENT	4,800,000	1,828,265
4	VOICE OVER IP (VOIP) TELECOMMUNICATIONS SYSTEM UPGRADES	965,000	965,000
5	VOICE OVER IP (VOIP) TELECOMMUNICATIONS SYSTEM - FULL REPLACEMENT	2,400,000	2,400,000
6	ENTERPRISE RESOURCE PLANNING SYSTEM REPLACEMENT	18,000,000	18,000,000
Total		**31,445,900**	**28,474,165**
Parks, Recreation, and Community Services			
1	VILLEGAS PARK WADING POOL REPLACEMENT	450,000	450,000
2	ISLANDER PARK WADING POOL REPLACEMENT	375,000	375,000
3	SHAMEL PARK WADING POOL REPLACEMENT	425,000	425,000
4	LOW PARK AND PARENT NAVEL LOT	650,000	650,000
5	FAIRMOUNT PARK - GOLF COURSE - ADD 50' NETTING ALONG FREEWAY (2000 LF)	300,000	300,000
6	FAIRMOUNT PARK - GOLF COURSE - NEW 75' NET/POST ALONG FIELD LANE (450 LF)	204,077	204,077
7	BERGAMONT PARK - PLAYGROUND SHADE SAILS	85,000	85,000
8	HUNTER PARK - INSTALLATION OF PLAYGROUND SHADE	75,000	75,000
9	TAFT PARK - SHADE STRUCTURE FOR PLAYGROUND	95,000	95,000
10	*LA SIERRA PARK - LA SIERRA COMMUNITY CENTER HVAC REPLACEMENT	51,500	51,500
11	MOUNT RUBIDOUX PARK SHADE STRUCTURES	175,000	175,000
12	*HUNT PARK - POOL FILTER REPLACEMENTS (3 TANKS)	46,500	46,500
13	*ISLANDER PARK - POOL FILTER TANK REPLACEMENT (3 TANKS)	45,000	45,000
14	*SHAMEL PARK - POOL FILTER REPLACEMENT(3 TANKS)	46,000	46,000
15	*CITYWIDE POOL REFURBISHMENT	1,300,000	1,300,000
16	*SHAMEL PARK SHAMEL POOL BUILDING	1,250,000	1,250,000

Capital Improvement Program

Unfunded Needs Projects Summary

PRIORITY ORDER	PROJECTS BY CATEGORY	TOTAL ESTIMATED PROJECT COST	UNFUNDED AMOUNT
Parks, Recreation, and Community Services (continued)			
17	*BOBBY BONDS PARK - CESAR CHAVEZ AUDITORIUM WOOD FLOOR REFINISH, INCLUDING STAGE	15,500	15,500
18	*BOBBY BONDS PARK - YOUTH OPPORTUNITY CENTER GYM FLOOR REFURBISHMENT	30,000	30,000
19	*BRYANT PARK - GYM FLOOR WOOD REFINISHING	10,500	10,500
20	*FAIRMOUNT PARK - LAKESIDE ROOM - REFINISH WOOD FLOORS	15,000	15,000
21	*LA SIERRA PARK - LA SIERRA COMMUNITY CENTER GYM FLOOR RESURFACING	10,500	10,500
22	*ORANGE TERRACE PARK - COMMUNITY CENTER GYM FLOOR REPAIR AND REFINISH	204,077	204,077
23	*ORANGE TERRACE PARK - DANCE ROOM WOOD FLOOR REFINISH	10,500	10,500
24	*ORANGE TERRACE PARK COMMUNITY CENTER FLOOR REPLACEMENT	103,000	103,000
25	*REID PARK - COMMUNITY CENTER GYM WOOD FLOOR REFINISH	11,000	11,000
26	*BOBBY BONDS PARK CESAR CHAVEZ COMMUNITY CENTER PAINT	62,000	62,000
27	*FAIRMOUNT PARK - LAKESIDE ROOM - PAINT IN & OUT + OUT BLDGS	75,000	75,000
28	*FAIRMOUNT PARK - PAINT PICNIC SHELTERS	30,000	30,000
29	*FAIRMOUNT PARK BUILDING PAINTING	30,000	30,000
30	*HUNT PARK - ADD EXTERIOR PAINTING OF COMMUNITY CENTER, POOL BLDG & PARK RESTROOM	75,000	75,000
31	*HUNT PARK - PAINT COMMUNITY CENTER INTERIOR	25,000	25,000
32	*LA SIERRA PARK - LA SIERRA COMMUNITY CENTER PAINT INTERIOR AND EXTERIOR	36,000	36,000
33	*ORANGE TERRACE PARK - COMMUNITY CENTER PAINT INTERIOR AND EXTERIOR	42,000	42,000
34	*REID PARK - COMMUNITY CENTER PAINT INTERIOR AND EXTERIOR	36,000	36,000
35	*BERGAMONT PARK - REPLACE PLAYGROUND EQUIPMENT AND SURFACE	350,000	350,000
36	*CASTLEVIEW PARK - PLAYGROUND SURFACING REPLACEMENT	100,000	100,000
37	*COLLETT PARK PLAYGROUND EQUIPMENT REPLACEMENT	295,000	295,000
38	*DARIO VASQUEZ PARK - PLAYGROUND SURFACING REPLACEMENT	100,000	100,000
39	*DON DERR PARK - BASKETBALL COURT RESURFACING	30,000	30,000
40	*MOUNTAIN VIEW PARK - PLAYGROUND POURED-IN-PLACE SURFACING REPLACEMENT	125,000	125,000
41	*RIVERWALK GOLDEN/SCHUYLER PLAYGROUND SURFACING	105,321	105,321
42	*RIVERWALK PLAYGROUND SURFACING	105,321	105,321
43	*RUTLAND PARK - PAR COURSE REPLACEMENT WITH NEW EQUIPMENT	50,000	50,000
44	*RUTLAND PARK - REPLACE PLAYGROUND WOOD CHIPS, ON-GOING	20,440	20,440
45	*RYAN BONAMINIO - REPLACE PLAYGROUND WOOD CHIPS, ON-GOING	320,104	320,104
46	*SYCAMORE HIGHLANDS PARK - PLAYGROUND POURED-IN-PLACE SURFACING REPLACEMENT	35,534	35,534
47	*TAFT PARK - REPLACE PLAYGROUND WOOD CHIPS, ON-GOING	20,104	20,104
48	*TAFT PARK - REPLACEMENT OF EXISTING PLAYGROUND EQUIPMENT	500,000	500,000
49	*THUNDERSKY PARK - REPLACE PLAYGROUND WOOD CHIPS, ON-GOING	19,672	19,672
50	*THUNDERSKY PARK - REPLACEMENT OF EXISTING PLAYGROUND EQUIPMENT	500,000	500,000
51	*ARLINGTON PARK - TENNIS COURT RESURFACING OF EXISTING AC COURTS (2 COURTS)	125,000	125,000
52	*BORDWELL PARK BASKETBALL REPLACEMENT	165,000	165,000
53	*CITYWIDE PARKING LOT REHABILITATION	500,000	500,000
54	*FAIRMOUNT PARK - REPAIR OR REPLACE LUMBER FISHING PIER	20,000	20,000
55	*FAIRMOUNT PARK - REPLACE LIFTED CONCRETE FISHING PIER	10,000	10,000
56	*FAIRMOUNT PARK - ROAD MAINTENANCE ON DEXTER EAST SIDE OF LAKE	225,000	225,000
57	*FAIRMOUNT PARK - ROAD MAINTENANCE ON OTHER STREETS	225,000	225,000
58	*FAIRMOUNT PARK - TENNIS COURT RESURFACING	15,000	15,000
59	*GOESKE SENOR CENTER PARKING LOT IMPROVEMENTS	50,000	50,000
60	*LINCOLN PARK BASKETBALL COURT IMPROVEMENTS	15,000	15,000
61	*ORANGE TERRACE PARK - EXTERIOR BASKETBALL COURT RESURFACING	15,000	15,000
62	*RUTLAND PARK - BASKETBALL COURT RESURFACING	8,000	8,000
63	*TAFT PARK - EXISTING TENNIS COURT RESURFACING	8,000	8,000
64	*VILLEGAS PARK - OUTDOOR BASKETBALL COURT RESURFACING	35,000	35,000
65	*WHITE PARK ADA CONCRETE REPLACEMENT	150,000	150,000
66	*BOBBY BONDS PARK - CESAR CHAVEZ ROOF REPLACEMENT	335,000	335,000
67	*BOBBY BONDS PARK - YOUTH OPPORTUNITY CENTER ROOF SKYLIGHT REPAIR	35,500	35,500
68	*COLLETT PARK - SHADE SHELTER WOOD LATTICE ROOF REPLACEMENT - THREE TOTAL	32,000	32,000
69	*FAIRMOUNT PARK - REPAIR PLASTER WALKING BRIDGE	10,000	10,000
70	*FAIRMOUNT PARK - REPAIR ROOF OLD STABLES	15,000	15,000
71	*GOESKE PARK - SENIOR CENTER - REPLACE SKYLIGHT AND REPAIR ROOF	75,000	75,000
72	*VILLEGAS PARK - COMMUNITY CENTER AREA ROOF REPLACEMENT	210,000	210,000
73	*BOBBY BONDS PARKS CESAR CHAVEZ COMMUNITY CENTER RESTROOM RENOVATION	150,000	150,000
74	*BORDWELL PARK - MODERNIZE PARK RESTROOMS (KANSAS SIDE)	150,000	150,000
75	*DON DERR PARK RESTROOM & CONCESSION BUILDING REPLACEMENT	1,100,000	1,100,000
76	*DON LORENZI PARK RESTROOM	412,000	412,000
77	*FAIRMOUNT PARK - FAIRMOUNT/HISTORIC CORE PHASE II (RESTROOM REPLACEMENT)	700,000	700,000
78	*FAIRMOUNT PARK - IZAAK WALTON KITCHEN AND RESTROOM MODERNIZATION	75,000	75,000
79	*FAIRMOUNT PARK - R&R ROSE GARDEN GAZEBO AND ARCHES	75,000	75,000

Capital Improvement Program

Unfunded Needs Projects Summary

PRIORITY ORDER	PROJECTS BY CATEGORY	TOTAL ESTIMATED PROJECT COST	UNFUNDED AMOUNT
Parks, Recreation, and Community Services (continued)			
80	*FAIRMOUNT PARK - REPAIR PLASTER/PAINT OLD RR BUILDING	25,000	25,000
81	*FAIRMOUNT PARK - REPAIR ROOF OLD RESTROOM BUILDING	15,000	15,000
82	*FAIRMOUNT PARK - REPAIR RUN OFF CATCH BASIN/WATER RETENTION AREA	300,000	300,000
83	*FAIRMOUNT PARK - STORM DRAIN CLEARING - UNIVERSAL PLAYGROUND PARKING LOT	75,000	75,000
84	*FAIRMOUNT PARK GOLF COURSE NET REPLACEMENT	65,000	65,000
85	*MARTHA MCLEAN PARK - REMOVE AND REPLACE EXISTING RESTROOM	325,000	325,000
86	*VILLEGAS PARK BLEACHER REPLACEMENT	185,000	185,000
87	*FAIRMOUNT PARK - LAKE EVANS WEIR BOX REPAIR	115,000	115,000
88	*FAIRMOUNT PARK LIGHTING REPAIRS	15,000	15,000
89	LINCOLN PARK LIGHTING IMPROVEMENTS	14,000	14,000
90	LINCOLN PARK - PLAYGROUND LIGHTING	45,000	45,000
91	*BOBBY BONDS PARK ARTIFICIAL TURF REFURBISHMENT	450,000	450,000
92	*DON JONES PARK - REMOVE AND REPLACE EXISTING CONCESSION BUILDING	450,000	450,000
93	*FAIRMOUNT PARK - BOATHOUSE DECK REPAIRS	150,000	150,000
94	*FAIRMOUNT PARK - DUCK ISLAND CLEANUP/CONTROLLED BURN	12,000	12,000
95	*FAIRMOUNT PARK - LAKE EVANS SPILLWAY IMPROVEMENTS, EROSION CONTROL	150,000	150,000
96	*FAIRMOUNT PARK - LAWN BOWLING BUILDING REPLACEMENT AND SITE IMPROVEMENTS	650,000	650,000
97	*FAIRMOUNT PARK - SPOILS AREA - INVASIVE SPP. CLEARANCE	75,000	75,000
98	*FAIRMOUNT PARK LAKE DREDGING	400,000	400,000
99	*FAIRMOUNT PARK SPRING BROOK WASH RENOVATION	975,000	975,000
100	*HARRISON PARK - REBUILD EXISTING SUMP PUMP LOCATED IN THE MIDDLE OF THE PARK	20,000	20,000
101	*HUNT PARK - REPLACE ONE PARTITION USED TO ACCOMMODATE RENTALS AND CLASSES	30,000	30,000
102	*NICHOLS COMMUNITY CENTER RENOVATION	5,000,000	4,880,000
103	*ORANGE TERRACE PARK PARTITION	30,000	30,000
104	*REID PARK - CLUBHOUSE KITCHEN IMPROVEMENTS	85,000	85,000
105	*REID PARK - COMMUNITY CENTER RENOVATION	850,000	850,000
106	*VILLEGAS PARK - REPLACE TWO PARTITIONS USED TO ACCOMMODATE RENTALS AND CLASSES	60,000	60,000
107	*WHITE PARK - SENIOR CENTER WINDOW WOOD BLIND REPLACEMENT FOR 28 WINDOWS.	15,000	15,000
108	*FAIRMOUNT PARK - LOCOMOTIVE REPAIRS/PAINTING (SPECIALTY PAINT)	100,000	100,000
109	FAIRMOUNT PARK SECURITY CAMERA SYSTEM	200,000	200,000
110	LINCOLN PARK - SECURITY CAMERAS	75,000	75,000
111	MOUNTAIN VIEW PARK CAMERA SYSTEM	30,000	30,000
112	CITYWIDE WATER CONSERVATION PROJECTS	500,000	500,000
113	FAIRMOUNT PARK ARMORY CONVERSION	250,000	250,000
Total		**25,747,150**	**25,627,150**
Electric			
1	RIVERSIDE TRANSMISSION RELIABILITY PROJECT (RTRP)	162,756,354	60,386,067
2	GIS UPGRADES/INTEGRATIONS, CUSTOMER ENGAGEMENT PORTAL &OTHER SYSTEM AUTOMATION	4,015,000	4,015,000
3	DISTRIBUTION TRANSFORMER LOAD MANAGEMENT SYSTEM	1,000,000	1,000,000
4	NEW ARLANZA SUBSTATION SITE	9,500,000	9,500,000
5	ADVANCED METERING INFRASTRUCTURE	27,663,930	21,356,613
6	CABLE REPLACEMENT - ARLINGTON AND ARLANZA	12,000,000	12,000,000
7	REMOTE MONITORING OF SUBSTATION TRANSFORMERS AND 69KV EQUIPMENT	8,000,000	8,000,000
Total		**224,935,284**	**116,257,680**
Water			
1	*VICTORIA AVE TRANMISSION MAIN	5,000,000	5,000,000
2	NORTH WATERMAN TREATMENT PLANT	14,000,000	14,000,000
3	LOCAL STORM WATER CAPTURE PROJECTS	12,000,000	12,000,000
4	GIS UPGRADES/INTEGRATIONS, CUSTOMER ENGAGEMENT PORTAL &OTHER SYSTEM AUTOMATION	6,216,305	6,216,305
5	ADVANCED METERING INFRASTRUCTURE	16,247,070	7,698,263
Total		**53,463,375**	**44,914,568**
Public Parking			
1	REPLACE 32 VERSION 2 LUKE METERS	400,000	400,000
2	REPLACE 47 VERSION 3 LUKE METERS	575,000	575,000
3	REPLACE 170 SINGLE HEAD METERS	100,000	100,000
4	UPGRADE TO LED LIGHTING IN ALL GARAGES	190,000	190,000
5	REPLACE GARAGES 1 & 2	32,000,000	32,000,000
Total		**33,265,000**	**33,265,000**
Railroad			
1	THIRD STREET GRADE SEPARATION AT THE BNSF RAILROAD STREET CROSSING	45,000,000	44,626,931

Capital Improvement Program

Unfunded Needs Projects Summary

PRIORITY ORDER	PROJECTS BY CATEGORY	TOTAL ESTIMATED PROJECT COST	UNFUNDED AMOUNT
Railroad (continued)			
2	BNSF QUIET ZONE-MISSION INN AVE., 3RD ST., AND SPRUCE ST	4,000,000	837,000
3	PHASE II GRADE SEPARATION PROGRAM (SPRUCE, JACKSON AND/OR MARY)	109,500,000	109,500,000
Total		**158,500,000**	**154,963,931**
Sewer			
1	PLANT 2 ACTIVATED SLUDGE REHABILITATION - PHASE II	199,500	199,500
2	RWQCP REHABILITATION - PHASE II	2,000,000	2,000,000
3	DEXTER WASTEWATER	1,200,000	1,200,000
4	FAIRGROUNDS WASTEWATER	1,200,000	1,200,000
5	WASTEWATER LIFT STATIONS	2,000,000	900,000
6	WASTEWATER LIFT STATION PROJECTS - PHASE II	5,200,000	5,200,000
7	TERTIARY SYSTEM REHABILITATION - PHASE II	4,800,000	4,800,000
8	PHOENIX PRIORITY A, B AND C SEWER CONSTRUCTION	4,945,000	4,945,000
9	TEQUESQUITE PRIORITY A, B AND C SEWER CONSTRUCTION - PHASE II	4,700,000	4,700,000
10	ARLANZA NEIGHBORHOOD SEWER MAINS REHAB	4,800,000	4,800,000
11	BIO-SOLIDS HANDLING REHABILITATION - PHASE II	3,000,000	3,000,000
Total		**34,044,500**	**32,944,500**
Storm Drain			
1	NORTH ORANGE ST STORM DRAIN PROJECT	150,000	150,000
2	CYPRESS AVE STORM DRAIN PROJECT	1,250,000	1,250,000
3	FOURTEENTH ST UNDERPASS PUMP STATION PROJECT	3,200,000	3,200,000
Total		**4,600,000**	**4,600,000**
Transportation			
1	ADAMS STREET/STATE ROUTE 91 INTERCHANGE IMPROVEMENTS	72,900,000	66,635,000
2	VAN BUREN WIDENING, INDIANA TO SOUTH CITY LIMIT	26,640,352	26,640,352
3	TYLER/STATE ROUTE 91 INTERCHANGE IMPROVEMENTS*	75,000,000	75,000,000
4	CANYON CREST WIDENING-VIA VISTA DR. TO COUNTRY CLUB DR.	8,104,673	2,000,000
5	ARLINGTON AVENUE AT CHADBOURNE AVENUE TRAFFIC SIGNAL	325,000	325,000
6	UNIVERSITY AVENUE FIBER OPTIC	450,000	450,000
7	14TH STREET WIDENING, SR 91 TO MARTIN LUTHER KING	24,000,000	24,000,000
8	CITYWIDE STRIPING REMOVAL	70,000	70,000
9	BATTERY BACKUP MAINTENANCE	40,000	40,000
10	MISCELLANEOUS SIGNAL CABINET REPLACEMENT	225,000	225,000
11	MISCELLANEOUS GUARDRAIL REPAIR	30,000	30,000
12	MISCELLANEOUS SIGNAL REWIRES	80,000	80,000
13	MARKET STREET DIAGONAL CROSSWALKS	30,000	30,000
14	MISSION INN AVE AT MAIN ST PED MALL LED LIGHT STRIP	100,000	100,000
15	NEW HAWK SIGNAL	135,000	135,000
16	VAN BUREN AT VICTORIA SIGNAL POLE REPLACEMENT	100,000	100,000
17	MISCELLANEOUS BRIDGE REPAIR	100,000	100,000
18	ARLINGTON AVENUE WIDENING, ADAMS TO VAN BUREN	1,500,000	1,500,000
19	ARLINGTON AVENUE WIDENING, VICTORIA TO ALESSANDRO	16,600,000	16,600,000
20	CHICAGO MEDIANS - LE CONTE TO MARTIN LUTHER KING	1,800,000	1,800,000
21	EUCALYPTUS AVE AND GEORGIA ST WIDENING IMPROVEMENTS	375,000	375,000
22	IRVING ST WIDENING ACROSS FROM HATHORNE ELEMENTARY	200,000	200,000
23	LARCHWOOD PLACE RECONSTRUCTION FROM BROCKTON AVENUE WESTERLY TO END OF STREET	900,000	900,000
24	COLE AVENUE AT KRAMERIA AVENUE TRAFFIC SIGNAL	325,000	325,000
Total		**230,030,025**	**217,660,352**
TOTAL UNFUNDED NEEDS		**$ 831,121,391**	**$ 693,457,503**

* Project a result of deferred maintenance.

City of Riverside
MULTI-YEAR CAPITAL PLANNING FISCAL POLICY
Approved by the City Council on March 20, 2018

PURPOSE:

A Capital Plan (Capital Improvement Program) is a multi-year financial plan that lists and describes capital projects a local government plans to undertake, indicates how projects will be funded and projects the effect of the plan on key financial variables.

A Capital Project results in the acquisition or increased value of a capital asset (e.g. land, land improvements, infrastructure and equipment, etc.).

The Government Finance Officers Association (GFOA) recommends that state and local governments prepare and adopt comprehensive, fiscally sustainable, multi-year capital plans. A multi-year capital plan is intended to identify and prioritize expected capital needs based on strategic priorities and operational needs, establish project scope and cost, detail estimated amounts of funding from various sources, and project future operating and maintenance costs.

POLICY:

The City shall adopt a multi-year Capital Plan spanning at least five years in conjunction with the biennial budget and five-year financial planning processes. The Capital Plan should include all of the City's planned capital projects. To qualify as a capital project, the asset or improvement should have: 1) monetary value (cost) of at least $20,000; and 2) useful life of at least 10 years.

The Capital Plan should incorporate the following elements as relevant and appropriate:

a. Assessment of the physical condition of existing capital assets;

b. Economic development projections, strategic plans, comprehensive plans, facility master plans and regional plans, including changes in federal, state, and county policy and regulations;

c. Prioritization of capital needs based on established policy; and

d. Financial strategies and sources of funding: 1) for the acquisition or improvements associated with the project, and 2) for the subsequent annual operation and maintenance costs of the capital asset throughout its life.

City of Riverside
PRIORITIZATION OF CAPITAL IMPROVEMENT PROJECTS
FISCAL POLICY

Approved by the City Council on March 20, 2018

PURPOSE:

The Government Finance Officers Association (GFOA) recommends that state and local governments establish an objective process for prioritizing capital improvement projects, to give decision-makers a basis for choosing the most compelling projects for funding and implementation.

POLICY:

The City shall adopt an objective process of prioritizing capital improvement projects to ensure consistency with the General Plan, and in conjunction with the biennial budget process or otherwise as capital funding becomes available, using the following factors:

1. Risk to Health, Safety and Environment:

    a. Avoids or minimizes the risk to health, safety and environment associated with the infrastructure based on condition assessment of the asset, or the lack of an asset, that may include the age, size, material, capacity, and history of failure of the infrastructure; and

    b. Urgency of the project to reduce the potential hazards to the public, property and environment.

2. Regulatory or Mandated Requirements:

    a. By legal mandate or consent decree;

    b. By other regulatory requirements (project specific or programmatic), and

    c. Must comply with court orders and settlements or avoids plausible legal claims.

3. Asset Condition, Annual Recurring Costs and Asset Longevity:

    a. Existing conditions and capacity to meet the basic level of service is deficient;

    b. Avoids potential failure due to substandard conditions;

    c. Improves the overall reliability of the capital asset and infrastructure system;

    d. Major implications of delaying the project such as significant future costs, or negative community impacts;

    e. Extent to which reduces City operations and maintenance expenditures; and

    f. Increases the longevity of the capital asset or extends the useful life of the asset in the long term.

4. Community Investment and Economic Prosperity:

    a. Contributes toward economic development and revitalization efforts;

    b. Reduces or avoids impacts to the community when infrastructure fails;

    c. Benefits under-served communities including those with low income households, low community engagement and low mobility or access to transportation systems; and

    d. Located in a census tract that is deemed eligible for Community Development Block Grant (CDBG) funds.

5. Level and Quality of Service:

    a. Improves existing conditions and capacity to meet the minimum level and quality of services that is deficient;

    b. Addresses an infrastructure or facility deficit identified in a community plan; and

    c. Addresses the need to install new facilities or improve existing facilities to provide access to City services

6. Sustainability and Conservation:

    Improves the health of the community and natural environment through sustainable designs with improved regional air quality and reduced greenhouse gas emission that contributes to climate change.

7. Funding Availability:

    Rank is increased based on assessment of the amount of funding needed to complete the current project phase and the entire project.

8. Project Readiness:

    a. Ready to enter the phase corresponding to the funding proposed;

    b. Delivered most expeditiously shall be preferred; and

    c. Complex environmental issues or known significant legal challenges shall be scored lower than projects without said complications.

9. Multiple Category Benefit and Bundling Opportunities:

    a. Fulfills the prioritization factors described above across multiple scoring categories;

    b. Reduces construction costs by potentially bundling with adjacent projects; and

    c. Provides for partnering or bundling opportunities with other local, state, or federal agencies (e.g. leverages shared resources).

Implementation of this Policy is not intended to release or alter the City's current or future obligations to complete specific capital improvement projects by specified deadlines, as may be imposed by court order, or order of any federal, state or local regulatory agency.

Planning Commission Memorandum

Community & Economic Development Department **Planning Division**
3900 Main Street, Riverside, CA 92522 | Phone: (951) 826-5371 | **RiversideCA.gov**

PLANNING COMMISSION HEARING DATE: MARCH 22, 2018

AGENDA ITEM NO.: 3

PROPOSED PROJECT

Case Numbers	**PSP18-0005**
Request	Review the first two years of the City of Riverside's FY 2018/19 through FY 2022/23 five-year Capital Improvement Program (CIP) for consistency with General Plan 2025
Applicant	City of Riverside Finance Department
Project Location	Citywide
Ward	Citywide
Staff Planner	*David Murray, Senior Planner*; 951-826-5773; dmurray@riversideca.gov

RECOMMENDATIONS

Staff Recommends that the City Planning Commission:

1. **DETERMINE** that the first two years of the City of Riverside's FY 2018/19 through FY 2022/23 five-year Capital Improvement Program (CIP)(PSP18-0005) is not subject to the California Environmental Quality Act (CEQA) review pursuant to CEQA Guidelines Section 15060(c)(3) because the review is not considered a "project", as defined by section 15378(b)(4). Additionally, the determination of consistency by the Planning Commission has no potential to result in a direct or indirect physical change in the environment.

2. **FIND** that FY 2018/19 and FY 2019/20 of the five-year Capital Improvement Program is consistent with the City's General Plan 2025; and

3. **REPORT to the City Council** that FY 2018/19 and FY 2019/20 of the five-year Capital Improvement Program is consistent with the City's General Plan 2025.

BACKGROUND

The City of Riverside Charter and the Riverside Municipal Code require that the Planning Commission review the City's proposed Capital Improvement Program (CIP) and determine that the program is consistent with the City's General Plan. California Government Code Section 65401 also requires that the Planning Commission review the City's Capital Improvement Program (CIP) for the upcoming fiscal year, and report its findings to the City Council.

The Planning Commission last reviewed the Fiscal Year (FY) 2017/2018 CIP on May 18, 2017, and reported that the projects were in conformity with the General Plan. Finance staff has prepared a formal CIP for City Council consideration as part of the FY 2018/19 through FY 2022/23 five-year budget process. The five-year CIP, along with a two-year budget, will be reviewed by the City Council following its review by the Planning Commission.

PROPOSAL/REQUEST

Staff is requesting that the Planning Commission review the CIP projects for FY 2018/19 and FY 2019/20, and report as to whether the projects conform to the City's General Plan. Exhibit 2 is a listing of all capital improvement projects contemplated for approval during FY 2018/19 and FY 2019/20. Included on the attached list are 92 identified projects at a total estimated cost of $231,648,232 for the two-year period.

Of the 92 projects identified in the first two years of the CIP, 86 projects are budgeted for FY 2018/19 for a total budget estimate of $124,120,463 and 73 of the projects are budgeted for FY 2019/20 for a total budget estimate of $107,527,769. Additionally, of the 92 identified projects listed, 78 are projects that are continued from FY 2017/18, and 14 are new projects.

PROJECT ANALYSIS

The Planning Division has reviewed the listed projects for conformance with General Plan 2025. Staff created two tables to correlate the General Plan 2025 Objectives and Policies that support FY 2018/19 and FY 2019/20 projects. Table 1 is comprised of projects related to the maintenance and replacement of existing facilities, as well improvements to new facilities that are needed to comply with State and Federal mandates, such as water conservation measures and accessibility for the disabled. In contrast, Table 2 lists new capital improvement projects.

While project costs have been provided, it is important to recognize the role of the Planning Commission, per City Ordinance and State law, is to report on project consistency with the General Plan.

MAINTENANCE, REPAIR AND MANDATED PROJECTS

The City's General Plan 2025, is a "vision document" intended to provide guidance for managing the City's growth. While most of General Plan 2025 is focused on policies related to new infrastructure and programs, it does identify the necessity of maintaining and repairing existing infrastructure, as illustrated on page PF-1:

> "*Well-designed and maintained infrastructure systems are critical to a community's economic development goals, and they enhance the quality of neighborhoods. Infrastructure, such as sewer and water lines, broadband communications networks and solid waste collection and disposal must be sufficient to accommodate the present and future needs of the community. As infrastructure ages or growth outpaces capacity, isolated failures represent a real potential. Providing quality public facilities such as libraries, hospitals and community centers are also of vital importance, as they contribute to the health, education and quality of life for all residents.*"

Additionally, page PR-16 underlines with City's commitment to maintaining existing park facilities while expanding new opportunities:

"*Enhancing Riverside's existing park and recreation facilities, as well as creating new recreational opportunities, will be carried out through the following objectives and policies. The City will continue to maintain its existing recreation programs and facilities, as well as making those resources available to all Riversiders.*"

Table 1 below lists sixty (60) capital improvement projects in FY 2018/19 and FY 2019/20 that are necessary to maintain or rehabilitate existing infrastructure, or modify existing facilities to meet State or Federal mandates. This list does not include rehabilitation projects that are intended to expand a facility for the purposes of accommodating future growth.

TABLE 1
MAINTENANCE, REHABILITATION AND MANDATED PROJECTS

Ref No.	Funded Projects by Department and Project	FY 17/18 Project? (Yes/No)	FY 18/19 Budget ($)	FY 19/20 Budget ($)	Total 2-Year Budget ($)
Airport					
1	Airport - Taxiway J Rehab	No	165,000	0	165,000
2	Airport- Camera System	No	50,000	0	50,000
3	Airport Facilities Terminal Patio Deck	Yes	100,000	0	100,000
4	Apron Asphalt Project Phase One	No	100,000	0	100,000
Municipal Buildings and Facilities					
6	City Buildings Deferred Maintenance	Yes	1,000,000	1,000,000	2,000,000
8	Ethanol (E85) Fueling Station	Yes	100,000	0	100,000
Electric					
12	Advanced Metering Infrastructure	Yes	0	2,719,900	2,719,900
13	CA General Order 165 Upgrades/Line Rebuilds/Relocation	Yes	2,284,874	2,349,993	4,634,867
14	Cable Replacement	Yes	3,434,790	2,822,794	6,257,584
15	Cable Replacement - PW Street Rehab.	Yes	211,562	217,592	429,154
17	Distribution Automation	Yes	150,000	300,000	450,000
19	GO 165 Upgrades/Line Rebuilds/Relocate-UG	Yes	994,344	1,022,682	2,017,026
20	Lines Rebuilds	Yes	1,789,804	2,506,363	4,296,167
21	Major 4-12 KV Conversion	Yes	2,327,927	1,849,532	4,177,459
30	Operation Technology Governance	Yes	220,024	226,295	446,319
32	Street Lighting	Yes	300,000	300,000	600,000
33	Substation Bus & Upgrades	Yes	1,281,265	1,359,025	2,640,290
34	Substation Innovation	Yes	1,665,800	1,672,031	3,337,831
36	Supervisory Control And Data Acquisition (SCADA)	Yes	600,000	600,000	1,200,000
37	System Substation Modifications	Yes	190,406	195,833	386,239
39	Work, Asset, & Inventory Mgmt System	No	486,594	652,776	1,139,370
Water					
40	Advanced Metering Infrastructure	Yes	0	2,339,114	2,339,114
42	Facility Rehabilitation Program	Yes	2,485,858	870,368	3,356,226
43	Hydrant Check Valves	Yes	50,000	50,000	100,000
44	Main Replacements Program	Yes	2,801,087	3,807,860	6,608,947
46	Network Communication System	Yes	846,250	870,368	1,716,618
47	Operation Technology Governance	Yes	118,475	121,851	240,326
48	Potable/Irrigation Well Replacement	Yes	1,586,719	1,631,940	3,218,659

TABLE 1 MAINTENANCE, REHABILITATION AND MANDATED PROJECTS					
Ref No.	**Funded Projects by Department and Project**	**FY 17/18 Project? (Yes/No)**	**FY 18/19 Budget ($)**	**FY 19/20 Budget ($)**	**Total 2-Year Budget ($)**
49	Pump Station Replacements	Yes	0	1,087,960	1,087,960
50	Recycled Water (Jackson St. Phase 1)	Yes	3,702,343	0	3,702,343
51	SCADA Upgrade & System Automation	No	0	652,776	652,776
55	Water Stock	Yes	10,000	10,000	20,000
Sewer					
59	Collection System Upgrades	Yes	1,000,000	0	1,000,000
60	Plant 2 Activated Sludge Rehab-Phase 1	Yes	400,000	250,500	650,500
61	RWQCP Rehabilitation-Phase II	No	500,000	0	500,000
62	Tertiary System Rehab-Phase 1	No	0	400,000	400,000
Storm Drain					
64	Miscellaneous Storm Drain Construction Program	Yes	100,000	100,000	200,000
Transportation					
67	Arterial Interconnect Project Program	Yes	40,000	40,000	80,000
69	CDBG Matching Funds	Yes	150,000	150,000	300,000
70	Controller Assembly Replacement Program	Yes	70,000	70,000	140,000
71	Curb And Gutter Repair Program	Yes	200,000	200,000	400,000
72	Indian Hill Road Slope Mitigation Project	No	210,000	0	210,000
73	Interconnected Traffic Signal Controller Replacement	Yes	560,000	0	560,000
75	LED Signal Lenses Replacement Program	Yes	20,000	20,000	40,000
76	Major Streets Rehabilitation	Yes	2,400,000	2,400,000	4,800,000
77	Measure Z Pavement Rehabilitation and Pedestrian Facilities Improvement Program	Yes	2,875,000	2,875,000	5,750,000
78	Minor Street Preservation (Slurry/Aram) Program	Yes	500,000	500,000	1,000,000
79	Minor Street Rehabilitation Program	Yes	1,500,000	1,500,000	3,000,000
80	Miscellaneous Signal Revisions Program	Yes	100,000	100,000	200,000
81	Miscellaneous Street Construction Program	Yes	500,000	500,000	1,000,000
82	Miscellaneous Traffic Projects Program	Yes	75,000	75,000	150,000
84	New Traffic Signals (Prioritized Locations-One Per Year) Program	Yes	250,000	250,000	500,000
85	Pedestrian Ramps Program	Yes	300,000	300,000	600,000
86	San Andreas/Glenwood Drainage and Site Improvement Project	Yes	125,000	0	125,000
87	SB-1 Pavement Rehabilitation, Maintenance, and Safety Improvements Program	No	5,426,724	5,426,724	10,853,448
88	Sidewalk Repair Program	Yes	300,000	300,000	600,000
89	Sidewalk/Trail Construction at Various Locations Program	Yes	300,000	300,000	600,000
90	Spread Spectrum Radio Replacement Program	Yes	10,000	10,000	20,000
91	Traffic Management Center Program	Yes	50,000	50,000	100,000
92	Traffic Signal Loop Replacement Program	Yes	25,000	25,000	50,000

The following General Plan objectives and policies support for the need to invest in the maintenance and replacement of existing facilities throughout the City:

Objective PF-1: Provide superior water service to customers.

> ***Policy PF-1.5:*** *Implement water conservation programs aimed at reducing demands from new and existing development.*

Objective PF-3: Maintain sufficient levels of wastewater service throughout the community.

> ***Policy PF-3.3:*** *Pursue improvements and upgrades to the City's wastewater collection facilities consistent with current master plans and the City's Capital Improvement Program.*

Objective PF-4: Provide sufficient levels of storm drainage service to protect the community from flood hazards and minimize the discharge of materials into the storm drain system that are toxic or which would obstruct flow.

> ***Policy PF-4.1:*** *Continue to fund and undertake storm drain improvement projects as identified in the City of Riverside Capital Improvement Plan.*

> ***Policy PF-4.3:*** *Continue to routinely monitor and evaluate the effectiveness of the storm drain system and make adjustments as needed.*

Objective PF-6: Provide affordable, reliable and, to the extent practical, environmentally sensitive energy resources to residents and businesses.

> ***Policy PF-6.2:*** *Ensure that adequate back-up facilities are available to meet critical electric power needs in the event of shortages or temporary outages.*

Objective PF-10: Meet the varied recreational and service needs of Riverside's diverse population.

Objective OS-1: Preserve and expand open space areas and linkages throughout the City and sphere of influence to protect the natural and visual character of the community and provide for appropriate active and passive recreational uses.

> ***Policy OS-1.9:*** *Promote open space and recreation resource as key reasons to live in Riverside.*

> ***Policy OS-1.12:*** *Ensure that areas acquired as part of the Open Space System are developed, operated and maintained to provide the City with a permanent publicly accessible open space system.*

> ***Policy OS-1.13:*** *Design Capital Improvement Program projects which affect identified open space areas to support these area's value as open space.*

NEW OR EXPANDED INFRASTRUCTURE AND FACILITIES

Of the ninety-two (92) identified projects for FY 2018/19 and FY 2019/20, thirty-two (32) are new or expanded facilities or infrastructure that are necessary to accommodate the City's growth. These projects are listed below in Table 2. It is important to note that some of these projects are multi-year efforts, and therefore may have been reviewed by the Planning Commission last year.

TABLE 2 NEW AND EXPANDED FACILITIES					
Ref No.	**Funded Projects by Department and Project**	**FY 16/17 Project? (Yes/No)**	**FY 18/19 Budget ($)**	**FY 19/20 Budget ($)**	**Total 2-Year Budget ($)**
Municipal Buildings and Facilities					
5	Cheech Marin Center for Chicano Art	No	1,000,000	0	1,000,000
7	Downtown Library	Yes	40,795,370	0	40,795,370
9	Metro Museum Expansion and Rehab	No	0	1,500,000	1,500,000
10	Police Headquarters	No	2,000,000	33,000,000	35,000,000
Innovation and Technology					
11	Data Network Replacement	Yes	1,356,097	1,195,256	2,551,353
Electric					
16	City-Wide Communications	Yes	400,000	1,338,000	1,738,000
18	Distribution Line Extensions	Yes	1,786,718	1,831,940	3,618,658
22	Major Feeders	Yes	500,000	1,000,000	1,500,000
23	Major Overhead/Underground Conversions	Yes	500,000	500,000	1,000,000
24	Major Street Light Projects	Yes	4,266,796	300,000	4,566,796
25	Major Tract Distribution	Yes	300,000	300,000	600,000
26	Major Transmission Line Projects	Yes	300,000	300,000	600,000
27	Meters	Yes	300,000	300,000	600,000
28	Neighborhood Street Light Retrofit	Yes	2,690,017	2,502,308	5,192,325
29	Network Communication System	Yes	846,250	1,087,960	1,934,210
31	Services	Yes	400,000	400,000	800,000
35	Substation Transformer Addition	Yes	2,115,625	2,175,920	4,291,545
38	Transformers	Yes	2,048,156	3,585,579	5,633,735
Water					
41	Distribution System Facilities Replacements	Yes	1,496,093	1,500,000	2,996,093
45	Meters	Yes	846,250	870,368	1,716,618
52	Seven Oaks Dam Conservation-Enhanced Recharge	Yes	2,115,624	2,175,920	4,291,544
53	System Expansion	Yes	1,300,000	1,377,491	2,677,491
54	Transmission Mains	Yes	5,341,952	1,450,250	6,792,202
Railroad					
56	BNSF Quiet Zone-Mission Inn Ave., 3rd St., and Spruce St	Yes	20,600	757,500	778,100
57	Third Street Grade Separation at the BNSF Railroad Street Crossing	Yes	323,069	0	323,069
58	Union Pacific Quiet Zone - Brockton And Palm	Yes	722,000	0	722,000
Storm Drain					
63	Fairview Dr. and Cornwall Ave Storm Drain Project	No	950,000	0	950,000
Transportation					
65	Active Transportation Master Plan	No	200,000	0	200,000
66	Adams Street/SR 91 Interchange Improvements	Yes	500,000	500,000	1,000,000
68	Canyon Crest Widening-Via Vista Dr. to Country Club Dr.	Yes	560,000	0	560,000
74	Iowa Avenue Widening - Martin Luther King to University	Yes	1,000,000	0	1,000,000

TABLE 2 NEW AND EXPANDED FACILITIES					
Ref No.	**Funded Projects by Department and Project**	**FY 16/17 Project? (Yes/No)**	**FY 18/19 Budget ($)**	**FY 19/20 Budget ($)**	**Total 2-Year Budget ($)**
83	Mission Boulevard Bridge Replacement at Santa Ana River	Yes	100,000	500,000	600,000

Staff has reviewed the list above for consistency with General Plan 2025. A description of each project and their corresponding General Plan 2025 Objectives and Policies has been provided in Exhibit 1.

Generally these projects accommodate the growth of the City, improve existing facilities so that they increase capacity or enhance the services provided to residents, or create a safer environment for vehicles and/or pedestrians.

ENVIRONMENTAL REVIEW

This review of the Capital Improvement Program (CIP) for a determination of consistency by the Planning Commission is not subject to the California Environmental Quality Act (CEQA) review under CEQA Guidelines Section 15060(c)(3) because the consistency review is not a "project", per 15378(b)(4). Additionally, the determination of consistency has no potential to result in a direct or indirect physical change in the environment.

APPEAL INFORMATION

Actions by the City Planning Commission, including any environmental finding, may be appealed to the City Council within ten calendar days after the decision. Appeal filing and processing information may be obtained from the Planning Department Public Information Section, 3rd Floor, City Hall.

EXHIBITS LIST

1. New/Expanded Project Description & Consistency Evaluation
2. CIP Identified Project List, FY 2018/19 and FY 2019/20

Report and Recommendations Prepared by:	David Murray, Senior Planner
Report and Recommendations Reviewed by:	Jay Eastman, Principal Planner
Report and Recommendations Approved by:	Rafael Guzman, Community & Economic Development Director

The following provides a brief description of projects from Table 2 in the Planning Commission staff report. Additionally, the Planning Division staff has identified criteria to support a determination that the projects are consistent with General Plan 2025.

5. Cheech Marin Center for Chicano Art

Reuse and repurpose existing Downtown library as the new Cheech Marin for Cheech Marin Center for Chicano Art. The facility will be a modern, innovative, active and accessible arts center offering a variety of public services including galleries, a café, administrative offices, classrooms, store. The new Cheech Marin Center for Chicano Art will hold a collection of about 700 pieces of art including paintings and sculptures.

The following Objectives and Policies most directly relate to these project:

Objective AC-2: Celebrate the diversity of Riverside's neighborhoods and residents, using arts and cultural programs to build neighborhood identity and mutual acceptance.

> *Policy AC-2.4*: Use community facilities (e.g., parks, schools, community centers, churches, senior centers, libraries) to increase opportunities for visual and performing arts throughout the City.

Objective AC-4: Strengthen Riverside's identity as the cultural and arts center for the Inland Empire.

> *Policy AC-4.1*: Expand the City government's leadership role in support of the arts and cultural institutions/facilities.
>
> *Policy AC-4.8*: Promote the use of City-owned neighborhood facilities for arts programming.

7. Downtown Library

Construction of a new 42,000 square foot 3 story, library in Downtown that through innovative and master planned space will connect with existing developments downtown to maximize visibility and use. The new facility replaces the outdated Library on Mission Inn and adds community meeting space, new historic programs, creative workspaces and expand children's services. It will also create a catalyst for future positive economic activity in the downtown core.

The following Objectives and Policies most directly relate to these project:

Objective LU-26: Ensure that a network of modern, effective and adequate community facilities are equitably distributed across the entire City.

> *Policy LU-26-1*: Develop and enforce standards for community facilities (such as fire and police stations, libraries and parks) based upon population densities and proximity of existing facilities.

Objective ED-5: Ensure that the library system remains a premier information and independent learning resource for the Riverside residents and a complement to formal education.

> *Policy ED-5.1*: Provide ample and convenient library facilities.

9. Metro Museum Expansion and Rehab

The Riverside Metropolitan Museum building was built between 1912 and 1914 as a United States Post Office and federal building. It later served as the home of the Riverside Police Department

with the Museum housed in its basement. Between 1962 and 1965 the Museum was remodeled into its current configuration, expanding to fill the entire building in 1966. No significant renovations have been done since that time. The renovation will bring the Museum into the twenty-first century and provide visitors with a modern museum experience in which to learn about the cultural and natural history of Riverside and its region.

The following Objectives and Policies most directly relate to these project:
Objective AC-7: Ensure that the City's Riverside Metropolitan Museum also remains an inclusive organization and provides authentic, tangible and accessible resources that respond to the diverse and changing needs of Riverside's dynamic community of learners.

> *Policy AC-7.1*: Explore the feasibility of creating a contemporary museum for Riverside through construction of a didactic facility that mirrors Riverside's cultural and natural history while providing authentic, tangible, educational resources for all Riversiders.
>
> *Policy AC-7.2*: Coordinate and provide education resources via Museum's historic structures to enhance accessibility to information about Riverside's historic and cultural heritage.

10. Police Headquarters

The new Police Headquarters is a proposed 10 acre campus located at the corner of Main Street and Columbia Avenue. The proposed project would develop a 50,000 square foot state of the art Police Headquarters design to meet the immediate administrative needs of the Riverside Police Department. The design would be adaptive to meet future needs. In addition to the Administrative Headquarters, the campus will be designed to accommodate a 10,000 square foot community center, future Emergency Operations Center expansion, joint police and fire training facility, a police station, physical agility training center, and secured parking for special operational equipment with open space.

The following Objectives and Policies most directly relate to these project:
Objective LU-26: Ensure that a network of modern, effective and adequate community facilities are equitably distributed across the entire City.

> *Policy LU-26-1*: Develop and enforce standards for community facilities (such as fire and police stations, libraries and parks) based upon population densities and proximity of existing facilities.

Objective PS-7: Provide high-quality police services to all residents and businesses in Riverside.

> *Policy PS-7.1*: Deploy human and financial resources to ensure adequate and equitable distribution of police services.

11, 16, & 29. Data Network Replacement, City-Wide Communications, Network Communication System

Hardware replacement and upgrade projects to replace critical components of the City's data network and related equipment, install fiber optic extensions, and improve communication backbones to improve system functionality, efficiency, reliability and security. Much of the equipment is up to a decade old and out of manufacturer support, which prevents Innovation and Technology from performing routine maintenance, and therefore presents a cybersecurity risk as well as risk for failure. The City's network equipment is critical to all enterprise software systems and communication citywide, including Riverside Public Utilities and Public Safety.

The following Objectives and Policies most directly relate to these project:
Objective PF-6: Provide affordable, reliable and, to the extent practical, environmentally sensitive energy resources to residents and businesses.

Policy PF-6.2: Ensure that adequate back-up facilities are available to meet critical electric power needs in the event of shortages or temporary outages.

Objective PF-7: Ensure that Riverside residents, the business community and educational institutions have easy access to state-of-the-art internet series and modern telecommunications technology.

Policy PF-7.1: Provide innovative, targeted technology projects and related economic development incentives.

Policy PF-7.9: Continue to work with Riverside Public Utilities and private telecommunications infrastructure operators and owners to ensure that Riverside has state-of-the-art internet and telecommunication facilities, system upgrades, features and coverages.

Objective PF-8: Expand the accessibility of internet and similar communications services throughout the community.

18, 22, 24, 25, 26, 27, 31, 35, 38, 41, 45, 53, & 54. Utility Infrastructure Programs – Major Tract Distribution, Major Transmission Line Projects, Major Street Light Projects, Distribution Line Extensions, Distribution System Facilities Replacements, System Expansion, Major Feeders, Electric and Water Meters, Substation transformer Addition, Transformers, and Services.

The City of Riverside Public Utilities Department maintains multiple funding accounts to support the installation of infrastructure when new development is proposed. Planning staff has grouped these accounts together because, for General Plan purposes, they all serve to accommodate customer growth (new development). Additionally, the funds are used on an as-needed basis, versus allocation to a specific site or project. Also, many of the funding programs contribute to replacing existing equipment that is outdated or underperforming.

The following Objective and Policy most directly relate to this project:

Objective PF-6: Provide affordable, reliable and, to the extent practical, environmentally sensitive energy resources to residents and business.

Policy PF-6.2: Ensure that adequate back-up facilities are available to meet critical electrical power needs in the event of shortages or temporary outages.

Objective LU-10: Provide for appropriate timing of development in accordance with the future land uses designated in this Land Use Element.

Policy LU-10.3: Time the provisions of capital improvements to ensure that all necessary public services and facilities for an area planned for new urban development are in place when development in the area occur.

23. Major Overhead/Underground Conversions

These potential conversions optimize opportunities to place various overhead facilities underground on a limited basis as a part of other projects. Electric facilities are evaluated for improvements to capacity, configuration, and integration with surround facilities during design.

The following Objective and Policy most directly relate to this project:

Objective LU-29: Minimize the visual impact of aerial facilities on the City's landscape.

Policy LU-29.3: Investigate funding sources to underground existing City-owned utility facilities.

28. Neighborhood Street Light Retrofit

Installation of new concrete street light standards, light fixtures, and power feeds in the greater Wood Streets area. Standards and fixtures are replicas of the 90-year-old historical street light system. New fixtures are light emitting diode (LED) lights for energy efficiency.

The following Objectives and Policies most directly relate to this project:
Objective HP-1: To use historic preservation principles as an equal component in the planning and development process.

Policy HP-1.2: The City shall assume its direct responsibility for historic preservation by protecting and maintaining its publicly owned culture resources. Such resources may include, but are not limited to, buildings, monuments, landscapes, and right-of-way improvements, such as retaining walls, granite curbs, entry monuments, light standards, street trees, and the scoring, dimensions, and patterns of sidewalks, driveways, curbs and gutters.

Objective HP-7: To encourage both public and private stewardship of the City's cultural resources.

Policy HP-7.3: The City shall coordinate historic preservation with other activities within its government structure.

Objective PF-6: Provide affordable, reliable and, to the extent practical, environmentally sensitive energy resources to residents and businesses.

Policy PF-6.3: Promote and encourage energy conservation.

52. Seven Oaks Dam Conservation – Enhanced Recharge

The Enhanced Recharge Project consists of constructing facilities downstream of the Seven Oaks Dam to enable capture and diversion of up to 500 cubic feet per second of local storm water and the construction and/or enhancement of spreading grounds for groundwater recharge on property owned or controlled by the San Bernardino Valley Water Conservation District.

The following Objective and Policies most directly relate to this project:
Objective OS-10: Preserve the quantity and quality of all water resources throughout Riverside.

Policy OS-10.1: Support the development and promotion of water conservation programs.

Policy OS-10.2: Coordinate plans, regulations and programs with those of other public and private entities which affect the consumption and quality of water resources within Riverside.

Policy OS-10.8: Cooperate with Riverside and San Bernardino Counties and adjacent jurisdictions in the review and approval of new developments which affect the quality and quantity of basin-wide groundwater and surface water resources.

Policy OS-10.10: Protect aquifer recharge features and areas of important aquifers from degradation of water quality and reduction of recharge.

56 & 58. BNSF Quiet Zone – Mission Inn Ave, 3rd St., and Spruce St., Union Pacific Quite Zone – Brockton Avenue & Palm Avenue

These projects will eliminate the routine sounding of train horns along the UP Railroad corridor at Brockton Avenue and Palm Avenue and along the BNSF Railway corridor between Mission Inn Avenue and Spruce Street by establishing Quiet Zones in accordance with the Federal Railroad Administration's (FRA) Final Rule. The projects provide for the construction of additional safety improvements consisting of new concrete curb, gutter and sidewalk, raised center medians, tactile strips, warning signs and grade crossing warning devices at the Brockton Avenue and Palm Avenue highway-rail grade crossing and the Mission Inn Avenue, 3rd Street and Spruce Street highway-rail grade crossings.

The following Objectives and Policies most directly relate to this project:
Objective PS-4: Protect the community from hazards related to air and ground transportation.

Policy PS-4.10: Use technology to improve safety at grade crossings that cause the least environmental harm, including Quiet Zone improvements such as upgraded and updated warning devices, additional gate arms, extended and raised medians, improved signage and coordinated traffic signals.

Objective N-4: Minimize ground transportation-related noise impacts.

Policy N-4.2: Investigate and pursue innovative approaches to reducing noise from railroad sources.

57. Third Street Grade Separation at the BNSF Railroad Street Crossing

This location is along the Burlington Northern Santa Fe Railroad and will reduce traffic congestion by eliminating the at-grade street intersection with the existing railroad lines. The construction of a grade separation will allow for non-disruptive flow of vehicular traffic either above or below the railroad lines. Work includes construction of an underpass for Third Street and the BNSF railroad tracks. Work involves construction of temporary shoofly tracks, grading, retaining walls, and a multi-track concrete bridge structure to provide a 4-lane roadway beneath the tracks.

The following Objectives and Policies most directly relate to these project:

Objective PS-4: Protect the community from hazards related to air and ground transportation.

Policy PS-4.8: Pursue grade-separated rail crossings as the first level priority for reducing street/rail conflicts.

Policy PS-4.9: Minimize the potential for accidents involving railways, automobiles, pedestrians and cyclists by working closely with the Riverside Police Department, RTA, California Highway Patrol and all applicable railroad companies to identify safety problems and implement corrective measures

Objective CCM-12: Facilitate goods movement as a means of economic expansion, while protecting residents and visitors from the negative effects typically associated with truck operations and rail service.

Policy CCM-12.3: Aggressively pursue grade-separated rail crossings to alleviate traffic congestion and associated air quality and noise impacts.

63. Fairview Drive and Cornwall Avenue Storm Drain Project

This project will add new pipe and catch basins within street right-of-way to capture run-off from the street.

The following Objectives and Policies most directly relate to these project:

Objective PF-4: Provide sufficient levels of storm drainage service to protect the community from flood hazards and minimize the discharge of materials into the storm drain system that are toxic or which would obstruct flows.

Policy PF-4.1: Continue to fund and undertake storm drain improvement projects as identified in the City of Riverside Capital Improvement Plan.

65. Active Transportation Master Plan

The City of Riverside Citywide Active Transportation Plan will provide a conceptual, multi-modal planning foundation for the City's future bicycle and pedestrian improvement projects. The planning process will integrate existing network, modeled, and survey data to fully assess needs and demands, and produce a design toolbox and complete proposed active transportation network. The final plan will be reviewed by relevant advisory committees and boards, and ultimately adopted by the City Council.

The following Objectives and Policies most directly relate to these project:

Objective CCM-2: Build and maintain a transportation system that combines a mix of transportation modes and transportation system management techniques, and that is designed to meet the needs of Riverside's residents and businesses, while minimizing the transportation system's impacts on air quality, the environment and adjacent development.

Policy CCM-2.9: Design all street improvement projects in a comprehensive fashion to include consideration of street trees, pedestrian walkways, bicycle lanes, equestrian

pathways, signing, lighting, noise and air quality wherever any of these factors are applicable.

Objective CCM-10: Provide an extensive and regionally linked public bicycle, pedestrian and equestrian trails system.

Policy CCM-10.3: Provide properly designed pedestrian facilities for the disabled and senior population to ensure their safety and enhanced mobility as users of streets, roads and highways emphasizing "complete streets" principles.

Policy CCM-10.4: Identify and seek to eliminate hazards to safe, efficient bicycle or pedestrian movement citywide.

Policy CCM-10.12: Encourage bicycling as a commute mode to school, work, etc

66. Adams Street/State Route 91 Interchange Improvements

This project includes the reconfiguration of Adams Street interchange at the SR-91 to reduce traffic congestion.

The following Objectives and Policies most directly relate to these project:

Objective CCM-1: Facilitate freeway and regional roadway improvements and construction to alleviate congestion and air pollution and to minimize regional cut-through traffic within Riverside.

Policy CCM-1.2: Support the addition of capacity improvements to SR-91, SR-60, I-215 and I-15.

68. Canyon Crest Drive Road Widening – Via Vista Drive to Country Club Drive

This project provides for the construction of street widening improvements on the easterly side of Canyon Crest Drive between Via Vista Drive and Country Club Drive to provide two travel lanes and two bike lanes in each direction as well as provide asphalt resurfacing improvements for the existing pavement. The improvements generally include new concrete curb, gutter, and sidewalk on the easterly side along with new drought tolerant landscaped medians.

The following Objectives and Policies most directly relate to this project:

Objective LU-18: Recognize Canyon Crest Drive as a vital parkway connection for the eastern portion of the City.

Policy LU-18.1: Develop streetscape, bicycle and pedestrian improvements that will solidify Canyon Crest Drive's role as a parkway.

Objective CCM-2: Build and maintain a transportation system that combines a mix of transportation nodes and transportation system management techniques, and that is designed to meet the needs of Riverside's resident and businesses, while minimizing the transportation system's impact on air quality, the environment and adjacent development.

Policy CCM-2.1: Complete the Master Plan of Roadways shown on Figure CCM-4 (Master Plan of Roadways).

Policy CCM-2.10: Emphasize the landscaping of parkways and boulevards.

74. Iowa Avenue Widening - Martin Luther King to University Avenue

The project includes the widening of Iowa Avenue between University Avenue and Martin Luther King Boulevard to provide 2 travel lanes in each direction including a dedicated cycle track section between Martin Luther King Boulevard and Everton Place. The project will also provide new utility infrastructure including storm drain, sanitary sewer, underground electric, and domestic water. The project will provide for new landscape and irrigation for the new parkways, medians, and cycle track buffer strip.

The following Objectives and Policies most directly relate to these project:

Objective CCM-2: Build and maintain a transportation system that combines a mix of transportation modes and transportation system management techniques, and that is designed

to meet the needs of Riverside's residents and businesses, while minimizing the transportation system's impacts on air quality, the environment and adjacent development.

Policy CCM-2.1: Complete the Master Plan of Roadways shown on Figure CCM-4 (Master Plan of Roadways).

Policy CCM-2.9: Design all street improvement projects in a comprehensive fashion to include consideration of street trees, pedestrian walkways, bicycle lanes, equestrian pathways, signing, lighting, noise and air quality wherever any of these factors are applicable.

Objective CCM-10: Provide an extensive and regionally linked public bicycle, pedestrian and equestrian trails system.

Policy CCM-10.10: Evaluate the needs of bicycle traffic in the planning, design, construction and operation of all roadway projects funded by the City.

Policy CCM-10.11: Provide sufficient paved surface width to enable bicycle traffic to share the road with motor vehicles where traffic volumes and conditions warrant.

Policy CCM-10.12: Encourage bicycling as a commute mode to school, work, etc.

83. Mission Boulevard Bridge Replacement at Santa Ana River

This project provides for the reconstruction of the Mission Bridge spanning over 1,100 feet across the Santa Ana River between the cities of Riverside and Jurupa Valley. The new bridge will be constructed along the same alignment as the existing bridge but will be wider than the existing bridge allowing for bike lanes and a sidewalk for pedestrian use.

The following Objectives and Policies most directly relate to these project:

Objective CCM-2: Build and maintain a transportation system that combines a mix of transportation modes and transportation system management techniques, and that is designed to meet the needs of Riverside's residents and businesses, while minimizing the transportation system's impacts on air quality, the environment and adjacent development.

Policy CCM-2.5: Review and update street standards as necessary to current capacity and safety practices.

Objective CCM-10: Provide an extensive and regionally linked public bicycle, pedestrian and equestrian trails system.

Policy CCM-10.10: Evaluate the needs of bicycle traffic in the planning, design, construction and operation of all roadway projects funded by the City.

Policy CCM-10.11: Provide sufficient paved surface width to enable bicycle traffic to share the road with motor vehicles where traffic volumes and conditions warrant.

Capital Improvement Program

Budgeted Projects Summary

2018/19 & 2019/20

Ref No.	Funded Projects by Department and Project	FY 17/18 Project? (Yes/No)	FY 18/19 Budget	FY 19/20 Budget	Total 2-Year Budget
Airport					
1	AIRPORT - TAXIWAY J REHAB	No	165,000	0	165,000
2	AIRPORT- CAMERA SYSTEM	No	50,000	0	50,000
3	AIRPORT FACILITIES TERMINAL PATIO DECK	Yes	100,000	0	100,000
4	APRON ASPHALT PROJECT PHASE ONE	No	100,000	0	100,000
Municipal Buildings and Facilities					
5	CHEECH MARIN CENTER FOR CHICANO ART	No	1,000,000	0	1,000,000
6	CITY BUILDINGS DEFERRED MAINTENANCE	Yes	1,000,000	1,000,000	2,000,000
7	DOWNTOWN LIBRARY	Yes	40,795,370	0	40,795,370
8	ETHANOL (E85) FUELING STATION	Yes	100,000	0	100,000
9	METRO MUSEUM EXPANSION AND REHAB	No	0	1,500,000	1,500,000
10	POLICE HEADQUARTERS	No	2,000,000	33,000,000	35,000,000
Innovation and Technology					
11	DATA NETWORK REPLACEMENT	Yes	1,356,097	1,195,256	2,551,353
Electric					
12	ADVANCED METERING INFRASTRUCTURE	Yes	0	2,719,900	2,719,900
13	CA GENERAL ORDER 165 UPGRADES/LINE REBUILDS/RELOCATION	Yes	2,284,874	2,349,993	4,634,867
14	CABLE REPLACEMENT	Yes	3,434,790	2,822,794	6,257,584
15	CABLE REPLACEMENT - PW STREET REHAB.	Yes	211,562	217,592	429,154
16	CITY-WIDE COMMUNICATIONS	Yes	400,000	1,338,000	1,738,000
17	DISTRIBUTION AUTOMATION	Yes	150,000	300,000	450,000
18	DISTRIBUTION LINE EXTENSIONS	Yes	1,786,718	1,831,940	3,618,658
19	GO 165 UPGRADES/LINE REBUILDS/RELOCATE-UG	Yes	994,344	1,022,682	2,017,026
20	LINES REBUILDS	Yes	1,789,804	2,506,363	4,296,167
21	MAJOR 4-12 KV CONVERSION	Yes	2,327,927	1,849,532	4,177,459
22	MAJOR FEEDERS	Yes	500,000	1,000,000	1,500,000
23	MAJOR OVERHEAD/UNDERGROUND CONVERSIONS	Yes	500,000	500,000	1,000,000
24	MAJOR STREET LIGHT PROJECTS	Yes	4,266,796	300,000	4,566,796
25	MAJOR TRACT DISTRIBUTION	Yes	300,000	300,000	600,000
26	MAJOR TRANSMISSION LINE PROJECTS	Yes	300,000	300,000	600,000
27	METERS	Yes	300,000	300,000	600,000
28	NEIGHBORHOOD STREET LIGHT RETROFIT	Yes	2,690,017	2,502,308	5,192,325
29	NETWORK COMMUNICATION SYSTEM	Yes	846,250	1,087,960	1,934,210
30	OPERATION TECHNOLOGY GOVERNANCE	Yes	220,024	226,295	446,319
31	SERVICES	Yes	400,000	400,000	800,000
32	STREET LIGHTING	Yes	300,000	300,000	600,000
33	SUBSTATION BUS & UPGRADES	Yes	1,281,265	1,359,025	2,640,290
34	SUBSTATION INNOVATION	Yes	1,665,800	1,672,031	3,337,831
35	SUBSTATION TRANSFORMER ADDITION	Yes	2,115,625	2,175,920	4,291,545
36	SUPERVISORY CONTROL AND DATA ACQUISITION (SCADA)	Yes	600,000	600,000	1,200,000
37	SYSTEM SUBSTATION MODIFICATIONS	Yes	190,406	195,833	386,239
38	TRANSFORMERS	Yes	2,048,156	3,585,579	5,633,735
39	WORK, ASSET, & INVENTORY MGMT SYSTEM	No	486,594	652,776	1,139,370
Water					
40	ADVANCED METERING INFRASTRUCTURE	Yes	0	2,339,114	2,339,114
41	DISTRIBUTION SYSTEM FACILITIES REPLACEMENTS	Yes	1,496,093	1,500,000	2,996,093
42	FACILITY REHABILITATION PROGRAM	Yes	2,485,858	870,368	3,356,226
43	HYDRANT CHECK VALVES	Yes	50,000	50,000	100,000
44	MAIN REPLACEMENTS PROGRAM	Yes	2,801,087	3,807,860	6,608,947
45	METERS	Yes	846,250	870,368	1,716,618
46	NETWORK COMMUNICATION SYSTEM	Yes	846,250	870,368	1,716,618
47	OPERATION TECHNOLOGY GOVERNANCE	Yes	118,475	121,851	240,326
48	POTABLE/IRRIGATION WELL REPLACEMENT	Yes	1,586,719	1,631,940	3,218,659
49	PUMP STATION REPLACEMENTS	Yes	0	1,087,960	1,087,960
50	RECYCLED WATER (JACKSON ST. PHASE 1)	Yes	3,702,343	0	3,702,343
51	SCADA UPGRADE & SYSTEM AUTOMATION	No	0	652,776	652,776
52	SEVEN OAKS DAM CONSERVATION-ENHANCED RECHARGE	Yes	2,115,624	2,175,920	4,291,544
53	SYSTEM EXPANSION	Yes	1,300,000	1,377,491	2,677,491
54	TRANSMISSION MAINS	Yes	5,341,952	1,450,250	6,792,202
55	WATER STOCK	Yes	10,000	10,000	20,000
Railroad					
56	BNSF QUIET ZONE-MISSION INN AVE., 3RD ST., AND SPRUCE ST	Yes	20,600	757,500	778,100
57	THIRD STREET GRADE SEPARATION AT THE BNSF RAILROAD STREET CROSSING	Yes	323,069	0	323,069
58	UNION PACIFIC QUIET ZONE - BROCKTON AND PALM	Yes	722,000	0	722,000

Capital Improvement Program

Budgeted Projects Summary

2018/19 & 2019/20

Ref No.	Funded Projects by Department and Project	FY 17/18 Project? (Yes/No)	FY 18/19 Budget	FY 19/20 Budget	Total 2-Year Budget
Sewer					
59	COLLECTION SYSTEM UPGRADES	Yes	1,000,000	0	1,000,000
60	PLANT 2 ACTIVATED SLUDGE REHAB-PHASE 1	Yes	400,000	250,500	650,500
61	RWQCP REHABILITATION-PHASE II	No	500,000	0	500,000
62	TERTIARY SYSTEM REHAB-PHASE 1	No	0	400,000	400,000
Storm Drain					
63	FAIRVIEW DR AND CORNWALL AVE STORM DRAIN PROJECT	No	950,000	0	950,000
64	MISCELLANEOUS STORM DRAIN CONSTRUCTION PROGRAM	Yes	100,000	100,000	200,000
Transportation					
65	ACTIVE TRANSPORTATION MASTER PLAN	No	200,000	0	200,000
66	ADAMS STREET/STATE ROUTE 91 INTERCHANGE IMPROVEMENTS	Yes	500,000	500,000	1,000,000
67	ARTERIAL INTERCONNECT PROJECT PROGRAM	Yes	40,000	40,000	80,000
68	CANYON CREST WIDENING-VIA VISTA DR. TO COUNTRY CLUB DR.	Yes	560,000	0	560,000
69	CDBG MATCHING FUNDS	Yes	150,000	150,000	300,000
70	CONTROLLER ASSEMBLY REPLACEMENT PROGRAM	Yes	70,000	70,000	140,000
71	CURB AND GUTTER REPAIR PROGRAM	Yes	200,000	200,000	400,000
72	INDIAN HILL ROAD SLOPE MITIGATION PROJECT	No	210,000	0	210,000
73	INTERCONNECTED TRAFFIC SIGNAL CONTROLLER REPLACEMENT	Yes	560,000	0	560,000
74	IOWA AVENUE WIDENING - MARTIN LUTHER KING TO UNIVERSITY	Yes	1,000,000	0	1,000,000
75	LED SIGNAL LENSES REPLACEMENT PROGRAM	Yes	20,000	20,000	40,000
76	MAJOR STREETS REHABILITATION	Yes	2,400,000	2,400,000	4,800,000
77	MEASURE Z PAVEMENT REHABILITATION AND PEDESTRIAN FACILITIES IMPROVEMENT PROGRAM	Yes	2,875,000	2,875,000	5,750,000
78	MINOR STREET PRESERVATION (SLURRY/ARAM) PROGRAM	Yes	500,000	500,000	1,000,000
79	MINOR STREET REHABILITATION PROGRAM	Yes	1,500,000	1,500,000	3,000,000
80	MISCELLANEOUS SIGNAL REVISIONS PROGRAM	Yes	100,000	100,000	200,000
81	MISCELLANEOUS STREET CONSTRUCTION PROGRAM	Yes	500,000	500,000	1,000,000
82	MISCELLANEOUS TRAFFIC PROJECTS PROGRAM	Yes	75,000	75,000	150,000
83	MISSION BOULEVARD BRIDGE REPLACEMENT AT SANTA ANA RIVER	Yes	100,000	500,000	600,000
84	NEW TRAFFIC SIGNALS (PRIORITIZED LOCATIONS-ONE PER YEAR) PROGRAM	Yes	250,000	250,000	500,000
85	PEDESTRIAN RAMPS PROGRAM	Yes	300,000	300,000	600,000
86	SAN ANDREAS/GLENWOOD DRAINAGE AND SITE IMPROVEMENT PROJECT	Yes	125,000	0	125,000
87	SB-1 PAVEMENT REHABILITATION, MAINTENANCE, AND SAFETY IMPROVEMENTS PROGRAM	No	5,426,724	5,426,724	10,853,448
88	SIDEWALK REPAIR PROGRAM	Yes	300,000	300,000	600,000
89	SIDEWALK/TRAIL CONSTRUCTION AT VARIOUS LOCATIONS PROGRAM	Yes	300,000	300,000	600,000
90	SPREAD SPECTRUM RADIO REPLACEMENT PROGRAM	Yes	10,000	10,000	20,000
91	TRAFFIC MANAGEMENT CENTER PROGRAM	Yes	50,000	50,000	100,000
92	TRAFFIC SIGNAL LOOP REPLACEMENT PROGRAM	Yes	25,000	25,000	50,000

CITY PLANNING COMMISSION MINUTES

THURSDAY, MARCH 22, 2018, 9:00 A.M.
ART PICK COUNCIL CHAMBER, CITY HALL
3900 MAIN STREET

		PLANNING COMMISSIONERS								
		KIRBY	STOSEL	RUBIO	PARKER	MILL	VACANT	ROSSOUW	TEUNISSEN	ZAKI
	WARDS	1	2	3	4	5	6	7	CW3	CW3
Roll Call:	Present	X	X	X	X	X		X	X	X
Chair Rossouw called the meeting to order at 9:00 a.m. with all members present.										
The Pledge of Allegiance was given to the flag.										
PLANNING/ZONING MATTERS FROM THE AUDIENCE There were no oral comments at this time.										
PUBLIC HEARINGS										
PLANNING CASE P15-1000 – *Conditional Use Permit – 10866 Arlington Avenue, Ward 7, CONTINUED TO APRIL 19, 2018* Chair Rossouw announced that the applicant has requested a continuance to the meeting of April 19, 2018. There was no one in the audience requesting to speak to the continuance. The Planning Commission: Continued Planning Case P15-1000 to the meeting of April 19, 2018.	Motion Second All Ayes	X	X	X	X	X		X	X	X
PLANNING CASE PSP18-0005 – *FY 2018/19 through FY 2022/23 five-year Capital Improvement Program (CIP), Citywide* Proposal by City of Riverside Finance Department for the review of the first two years of the City's FY 2018/19 through FY 2022/2023 five-year Capital Improvement Program (CIP) and determination of consistency with the General Plan 2025, pursuant to Riverside Municipal Code Section 19.050.030 and California Government Code Section 65401. Dave Murray, Senior Planner, presented the staff report. There were no comments from the audience. Following discussion the Planning Commission recommended that the City Council: 1) Determine that the first two years of the City of Riverside's FY 2018/19 through FY 2022/23 five-year Capital Improvement Program is not subject to the California Environmental Quality Act CEQA) review pursuant to CEQA Guidelines Section 15060 (c)(3) because the review is not considered a "project", as defined by section 15368(b)(4). Additionally, the determination of consistency by the Planning Commission has no potential to result in a direct or indirect physical change in the environment. 2) Find that FY 2018/19 and FY 2019/20 of the five-year Capital Improvement Program is consistent with the City's General Plan 2025; and 3) Report to the City Council that FY 2018/19 and FY 2019/20 of the five-year Capital Improvement Program is consistent with the City's General Plan 2025.	Motion Second Ayes	X	X	X	X	X		X	X	X

		PLANNING COMMISSIONERS								
		KIRBY	STOSEL	RUBIO	PARKER	MILL	VACANT	ROSSOUW	TEUNISSEN	ZAKI
	WARDS	1	2	3	4	5	6	7	CW3	CW3
PLANNING CASES P17-0467, P17-0466, P17-0468, P17-0469, P17-0470, P17-0471, AND P17-0472 – *General Plan, Specific Plan Amendment, Rezoning, Site Plan Review, Traffic Pattern Modification Measures, Vacation And Variance for the Development of Mixed Use Development – 3575-3661 Merrill Avenue, Ward 3* Proposal by Richard Hamm of Pelican Merrill Avenue, LLC, to consider the following entitlements for the construction of a three story, 98,608 square-foot mixed-use development, consisting of 108 residential units and 1,200 square feet of commercial space: 1) a General Plan Amendment to amend the General Plan Land Use Designation from C – Commercial to MU-U – Mixed-Use-Urban; 2) a Specific Plan Amendment to amend the Magnolia Avenue Specific Plan to include the MU-U – Mixed-Use-Urban Land Use designation in the Magnolia Center District; 3) a Zoning Code Amendment to rezone the project site from CG-SP – Commercial General-Specific Plan (Magnolia Avenue) Overlay Zones to MU-U-SP – Mixed-Use-Urban-Specific Plan (Magnolia Avenue) Overlay Zones; 4) a Site Plan Review; 5) Traffic Pattern Modification Measures for the reconfiguration of Merrill Avenue; 6) a Street Vacation to vacate three-feet of Merrill Avenue; and 7) a Variance to allow perimeter walls higher than permitted by Code. Brian Norton, Senior Planner, presented the staff report. He stated that a letter was received from South Coast Air Quality Management District and was distributed this morning to the commission. Also, distributed this morning were revised conditions for the project. Richard Hamm, representing the applicant, stated they were in agreement with staff's recommended conditions. Comments from the audience: Robert Beatty, representing the Magnolia Center Business Council, and Jeff Rieger, Vestar, Riverside Plaza, spoke in support of the project. Following discussion the Planning Commission recommended that the City Council: 1) Determine that the proposed project will not have a significant effect on the environment based on the findings set forth in the case record and recommend City Council adoption of a Mitigated Negative Declaration and Mitigation Monitoring and Reporting Program (MMRP) pursuant to CEQA Section 21081.6; and 2) Approve Planning Cases: P17-0467 (General Plan Amendment), P17-0466 (Specific Plan Amendment), P17-0468 (Rezone), P17-0469 (Site Plan Review), P17-0470 (Traffic Pattern Modification Measures), P17-0471 (Street Vacation) and P17-0472 (Variance) based on the findings outlined in the staff report and summarized in the attached findings and subject to the recommended revised conditions submitted by staff.	Motion Second Ayes	X	X	X	X	X		X	X	X

City of Arts & Innovation

CITY PLANNING COMMISSION MINUTES

THURSDAY, MARCH 22, 2018, 9:00 A.M.
ART PICK COUNCIL CHAMBER, CITY HALL
3900 MAIN STREET

	WARDS	PLANNING COMMISSIONERS								
		KIRBY	STOSEL	RUBIO	PARKER	MILL	VACANT	ROSSOUW	TEUNISSEN CW3	ZAKI CW3
		1	2	3	4	5	6	7	CW3	CW3
MISCELLANEOUS PLANNING AND ZONING ITEMS ITEMS FOR FUTURE AGENDAS AND UPDATE FROM CITY PLANNER Patricia Brenes, Principal Planner, reported on upcoming Planning Commission cases.										
MINUTES The Minutes of the Planning Commission Meeting of March 8, 2018 were approved as presented.	All Ayes	X	X	X	X	X		X	X	X
ADJOURNMENT The meeting was adjourned at 9:41 a.m. to the meeting of April 5, 2018 at 9:00 a.m. in the Art Pick Council Chamber.										

The above actions were taken by the City Planning Commission on March 22, 2018. There is now a 10-day appeal period that ends on April 2, 2018. During this time, any interested person may appeal this action to the City Council by submitting a letter of appeal and paying the appeal fee. Also, during this time, the Mayor or any member of the City Council can refer the case for review on the Council's discussion calendar. In the absence of an appeal or referral, the Commission's decisions and conditions become final after 5:00 p.m. on April 2, 2018.

CITY OF RIVERSIDE

CAPITAL IMPROVEMENT PROGRAM

GLOSSARY

NOTES

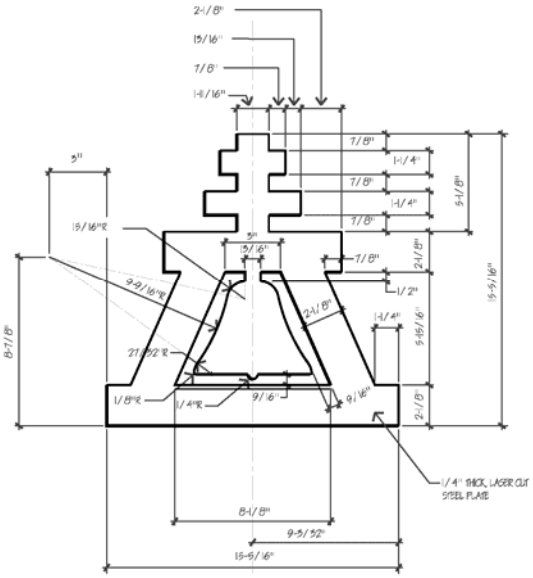
2-1/8"
15/16"
7/8"
1-11/16"
3"
15/16"R
9-9/16"R
27-52"R
1/8"R
1/4"R
9/16"
9/16"
7/8"
1-1/4"
7/8"
1-1/4"
7/8"
5-1/8"
7/8"
2-1/8"
1/2"
1-1/4"
5-15/16"
2-1/8"
15-9/16"
8-7/8"
1/4" THICK, LASER CUT STEEL PLATE
8-1/8"
9-5/32"
15-9/16"

Capital Improvement Program Glossary

Appropriation – A City Council authorization to permit the City to incur obligations to make expenditures for specific purposes.

Assessed Valuation – A value that is established by the County of Riverside for real and personal property for use as a basis for levying property taxes.

Assessment District: A separate local government entity formed to provide specific local public services. Assessment districts can be established to provide a single service such as sewage treatment or to provide multiple services such as police and fire protection, parks and recreation facilities, and water distribution systems. Property owners within the assessment district's boundary pay into the district in direct proportion to the benefits or services they receive.

Bond – A long-term "IOU" or promise to pay a sum of money on a specific date, at a specific interest rate. The most common types of bonds are: general obligation, revenue, and special improvement district bonds.

Bond Refinancing – The payoff and re-issuance of bonds to obtain lower interest rates and/or more favorable terms.

Capital: Assets that add to the long-term net worth of the City

Capital Improvements – Construction or major repair of municipal buildings and facilities, such as City Hall, libraries, parks, recreational facilities, the museum, storm drains, the airport, streets, the sewer system, electric and water utilities, etc.

Capital Improvement Program (CIP) – A multi-year financial plan in which needed improvements to the City's facilities and infrastructure are identified, priced, and prioritized.

Capital Project – Major construction, acquisition, or renovation activities that add value to the City's physical assets or significantly increase asset functionality.

Certificates of Participation – lease financing agreements in the form of tax exempt securities similar to bonds.

Debt Service – The cost of paying principal and interest on borrowed money according to a predetermined schedule.

Capital Improvement Program Glossary

Department – An organizational unit comprised of programs or divisions, such as Human Resources, Police, or Public Works.

Expenditure – The cost for personnel, materials, equipment, and contractual obligations required for a department to operate or for a capital program to be completed.

Fee – A general term used for any charge levied by the City for providing a service or permitting an activity.

Fiscal Year – A 12-month period of time designated for accounting and budgeting purposes (July 1 through June 30 for the City of Riverside).

Fixed Assets – Resources owned by the City which are intended for long-term use, such as land, buildings, and machinery.

Fund – An accounting entity with a self-balancing set of accounts recording financial resources and transactions for specific activities.

Funded Capital Projects – Projects for which funding is currently available and identified

General Fund – Used to account for all financial resources except those required to be accounted for in another fund.

General Obligation Bond – A bond backed by the full faith, credit, and taxing power of the City.

Infrastructure – The physical assets of a City (e.g., streets, water, sewer, public buildings, and parks).

Operating Budget – That portion of the budget which deals with recurring expenditures, such as salaries, utilities, postage, printing, and fuels.

Restricted Non-City Funds – Restricted Non-City Funds are funds requested from non-City sources that have not yet been guaranteed. These funds are project-specific and must be utilized for the project for which they are designated.

Revenue Bonds – A bond backed by revenues generated from the project(s) to be constructed.

Capital Improvement Program Glossary

Riverside County Transportation Commission (RCTC) – RCTC is the regional planning organization responsible for the distribution of Federal, State, and Local transportation funds.

Unfunded Capital Projects – Projects for which funding is currently unavailable

NOTES

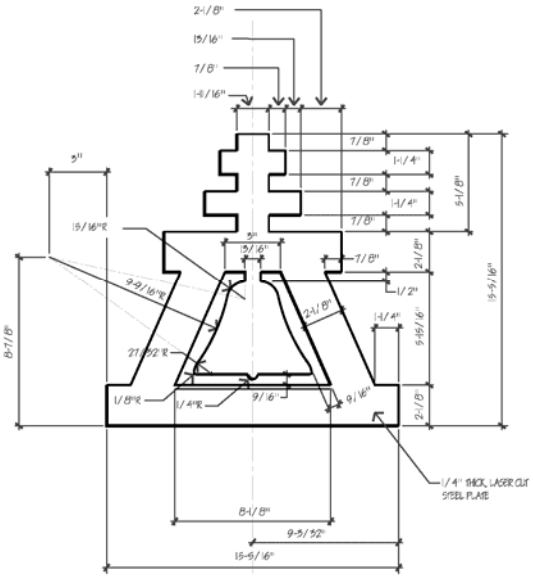
2-1/8"
15/16"
7/8"
1-11/16"
3"
15/16"R
9-9/16"R
8-7/8"
27-52"R
1/8"R
1/4"R
9/16"
9/16"
7/8"
1-1/4"
7/8"
1-1/4"
7/8"
5-1/8"
15/16"
7/8"
2-1/8"
1/2"
2-1/8"
1-1/4"
5-15/16"
2-1/8"
15-9/16"
1/4" THICK, LASER CUT STEEL PLATE
8-1/8"
9-5/32"
15-9/16"

Revenue Sources

AIRPORT FUND (530)
Capital expenditures for the Riverside Municipal Airport are budgeted in the Airport Fund, which is an enterprise fund.

AIR QUALITY MANAGEMENT DISTRICT FUND (240)
State funds are available from a portion of the motor vehicle registration fees (California Assembly Bill 2766) that are restricted for use towards the implementation of programs and projects that will reduce motor vehicle air pollution. This fund is also used to account for qualified air pollution reduction programs funded by the South Coast Air Quality Management District (SCAQMD).

CAPITAL OUTLAY FUND (430)
This fund is used to account for the construction and installation of street and highway capital improvements.

CENTRAL GARAGE/FLEET FUND (650)
This fund is used to account for the maintenance and repair of all City-owned vehicles and motorized equipment.

CENTRAL STORES FUND (640)
Used to account for the operations of the City's centralized supplies inventory, including receiving and delivery services provided to City departments.

COMMUNITY DEVELOPMENT BLOCK GRANT (220)
Federal funds are allocated to local government, usually through a local clearinghouse (Riverside County Economic Development Agency), based on a formula, and are required to be applied for and used within a broad functional area such as community development.

ELECTRIC FUND (510)
Capital expenditures for the City's Electric Utility are budgeted in the Electric Fund (510), which is an enterprise fund. The majority of funding for capital expenditures will be from bond proceeds. Additional funding will be from the use of reserves, rates, and contributions in aid of construction.

GENERAL FUND (101)
Major support for the General Fund comes from sales tax, property tax, fees for services rendered, utility users' tax, Transient Occupancy Tax (TOT), and transfers from the Electric and Water Funds. Projects supported by this fund are budgeted on an availability of funds basis and funded from general revenues. The General Fund is used to record only current revenues and

Revenue Sources

current expenses; it does not recognize long-term assets and liabilities. This fund provides traditional governmental services such as public safety, library, and recreational services.

GRANT FUND (215)
Contributions of cash or other assets from another governmental agency or other organization to be used or expended for a specific purpose, activity, or facility.

GAS TAX FUND (230)
Revenue for this fund is generated by the State of California's tax on gasoline sales. The funds are dedicated to local transportation capacity improvements and restricted to research, planning, construction, improvement, maintenance and operation of public streets and highways or public mass transit.

LOCAL PARK SPECIAL CAPITAL IMPROVEMENTS FUND (411)
This fund is used to account for capital projects to construct parks and recreational facilities funded by impact fees.

MEASURE A FUND (432)
State funds are generated from the one-half percent sales tax levied throughout Riverside County to carry out transportation projects. Funds are restricted to fund a comprehensive program of roadway and transit improvements including: highway, street, and road construction; highway, street, and road maintenance; bus and light rail capital and operations; improved transportation services for elderly and handicapped persons; and transportation-related air quality programs. Original Measure A expired in 2009 but a measure was placed on the November 2004 ballot to renew the Measure A for 30 more years after the original measure expired. After voters passed the new Measure A with more than 75% of voter approval, the "new" Measure A took effect in April 2009.

MEASURE Z CAPITAL FUND (420)
This fund is used to account for capital projects funded by Measure Z, which was approved by Riverside voters on November 8, 2016. Revenues from the 1% use tax will be used on capital projects such as the new Downtown Library, Police Headquarters, Museum Expansion, and Downtown Parking Garage.

PUBLIC PARKING FUND (570)
Capital expenditures for the construction of parking facilities are budgeted in the Public Parking Fund (570), which is an enterprise fund. This fund is also used

Revenue Sources

to account for expenditures related to parking facilities operated by the City in Downtown Riverside. Revenue sources include:

- Rent Revenues – revenue from rented facilities
- Garage, Lot and Meter Fees – fees charged for parking
- Parking Fines – fines assessed for parking violations
- Bond Proceeds – proceeds from the sale of revenue bonds

RDSA RORF – ARLINGTON BOND FUND (471)

Redevelopment Successor Agency (RDSA) Redevelopment Obligation Retirement Fund (RORF), which is a requirement of the legislation dissolving California Redevelopment Agencies. Assets and liabilities of each former Redevelopment Project Area are now housed in individual RORFs.

REFUSE COLLECTION FUND (540)

This fund is used to account for the operation of the City's solid waste and sanitation program, which provides for the collection and disposal of solid waste. Revenues are collected on a user charge basis to residents and businesses.

REGIONAL PARK SPECIAL CAPITAL IMPROVEMENTS FUND (413)

Regional park improvements are funded though the Regional Park Fund. A portion of Development Fees charged when properties are developed is dedicated to the funding of regional parks and recreational facilities. Fees are dependent on development so the CIP only shows funded projects for which fee revenues are already available or that are annual funding obligations. As funding becomes available, the Parks, Recreation, and Community Services Department requests that the City Council appropriate funds for projects contained in the Unfunded Capital Projects list. Projects are not programmed based on anticipated revenues.

SEWER SERVICE FUND (550)

Capital expenditures for the construction and improvement of the City's sewer system are budgeted in the Sewer Fund (550), which is an enterprise fund. In addition to capital expenditures, operational expenditures related to the operations and maintenance of the City's sewer system are budgeted in the Sewer Fund. Revenue sources include:

- Sewer Connection Fees – fees charged when property is developed that are dedicated to the funding of sewer infrastructure projects
- Service Charges – funds that are generated from service charges to users of the City's sewer system

Revenue Sources

- Community Services District (CSD) Payments – payments from Community Services Districts for which the City provides sewage treatment services
- State Revolving Loans – low interest loans provided by the State to fund capital improvements
- Bond Proceeds – proceeds from the sale of revenue bonds

SPECIAL CAPITAL IMPROVEMENTS FUND (411)
This fund is used to account for the acquisition, construction, ad installation of capital improvements and a Community Facilities District within the City.

SPECIAL TRANSIT FUND (560)
This fund is used to account for expenditures related to the City's fleet of mini-buses that are used to transport senior citizens and disabled persons.

STORM DRAIN DEVELOPMENT IMPACT FEE (DIF) FUND (410)
Capital expenditures for the construction and improvement of storm drains are budgeted in the Storm Drain Fund. Revenues are from Storm Drain Fees, which are charged when property is developed. The funds are dedicated to storm drain infrastructure projects. This fund is also used to account for the National Pollution Discharge Elimination System (NPDES). Funds are used for storm drain maintenance and inspection as required for California storm water permits funded by a special assessment district of Riverside County.

TRANSPORTATION FUND (431)
This account is to account for the operations of the City's Senior Citizens' and Handicapped Transportation System in accordance with Article 4 of the Transportation Development Act of 1971 (California Senate Bill 325). The Federal Trans Administration Funds are also account for in this fund.

TRANSPORTATION DEVELOPMENT IMPACT FEE (DIF) FUND (433)
Revenues for this fund are collected from property developments. This one-time charge is collected over the course of development. Funds are dedicated to offset costs for transportation and flood control improvements.

TRANSPORTATION UNIFORM MITIGATION FEES (TUMF) FUND (434)
Under TUMF, developers of residential, industrial and commercial property pay a development fee to fund transportation projects that will be required because of the growth the projects create. The Western Riverside Council of Governments oversees the allocation of TUMF fees to cities for funding local transportation projects.

Revenue Sources

WATER FUND (520)

Capital expenditures for the City's Water Utility are budgeted in the Water Fund, which is an enterprise fund. The majority of funding for capital expenditures will be from bond proceeds. Additional funding will be from the use of reserves, rates, and contributions in aid of construction.

NOTES

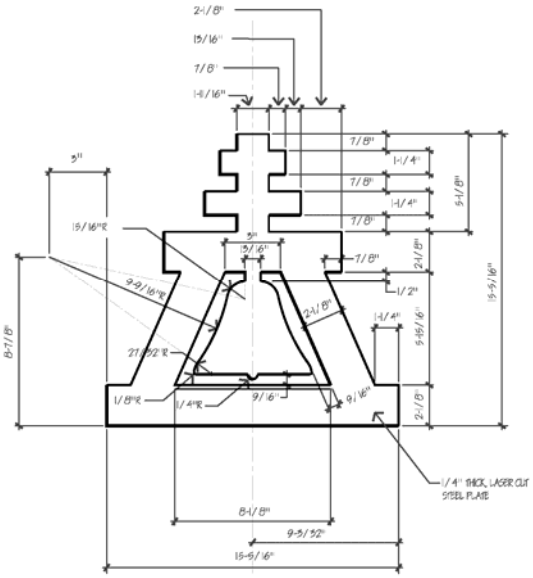
2-1/8"
15/16"
7/8"
1-11/16"
3"
15/16"R
9-9/16"R
27-9/32"R
1/8"R
1/4"R
9/16"
9/16"
7/8"
1-1/4"
7/8"
1-1/4"
7/8"
5-1/8"
7/8"
2-1/8"
1/2"
1-1/4"
5-15/16"
2-1/8"
15-9/16"
8-7/8"
1/4" THICK, LASER CUT STEEL PLATE
8-1/8"
9-9/32"
15-9/16"

CITY OF RIVERSIDE

CAPITAL IMPROVEMENT PROGRAM

INDEX

NOTES

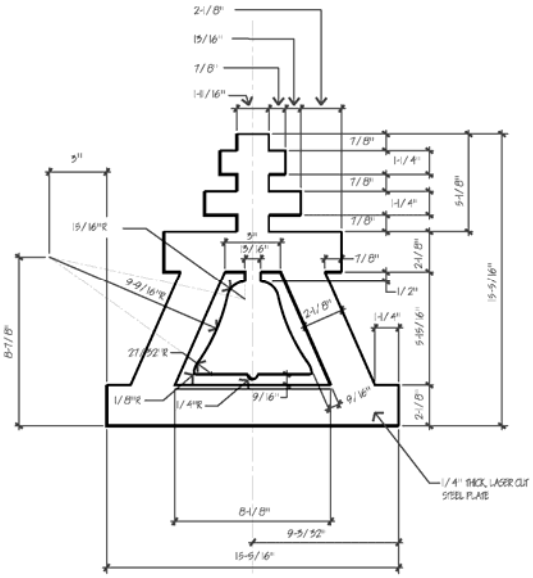
2-1/8"
15/16"
7/8"
1-11/16"
3"
15/16"R
9-9/16"R
27-9/32"R
1/8"R
1/4"R
9/16"
9/16"
7/8"
1-1/4"
7/8"
1-1/4"
7/8"
5-1/8"
15/16"
7/8"
2-1/8"
1/2"
2-1/8"
1-1/4"
5-15/16"
2-1/8"
15-5/16"
8-7/8"
1/4" THICK, LASER CUT STEEL PLATE
8-1/8"
9-5/32"
15-5/16"

Alphabetical Index

SCHEDULES AND CHARTS

Alphabetical Index 319
Capital Fiscal Policies 283
Capital Improvement Plan Sources and Uses 23
Capital Improvement Program Glossary 307
Capital Improvement Projects by Funding Source 29
City Manager's Message 3
Financial Summary Narrative 15
Guide to the Capital Improvement Program 5
Planning Commission Action Items 286
Project Number Index 325
Revenue Sources 311
Revenue Summary by Fund 35
Schedule of Unfunded Capital Projects 279

PROGRAM CATEGORY OVERVIEWS

Project Category Overview: Airport 39
Project Category Overview: Electric 51
Project Category Overview: Innovation and Technology 99
Project Category Overview: Municipal Buildings and Facilities 107
Project Category Overview: Parks, Recreation, and Community Services 125
Project Category Overview: Public Parking 149
Project Category Overview: Railroad-Related 155
Project Category Overview: Sewer 167
Project Category Overview: Storm Drain 187
Project Category Overview: Transportation 197
Project Category Overview: Water 247

PROJECT DESCRIPTIONS

Active Transportation Master Plan - 9023 241
Adams Street/State Route 91 Interchange Improvements - 8821 218
Advanced Distribution Management System - 470830 95
Advanced Metering Infrastructure (Electric) - 470823 89
Advanced Metering Infrastructure (Water) - 470823 268
Airport - Taxiway A Rehabilitation - 2667 44
Airport - Taxiway J Rehabilitation - 2668 45
Airport Camera System - 9039 48
Airport Facilities Terminal Patio Deck - 9034 46
Apron Asphalt Project Phase I - 9038 47
Aquifer Storage & Recovery System - 470814 264
Arlington Avenue Improvements - 8723 217
Arlington Youth Innovation Center - 2560 129

Alphabetical Index

Arterial Interconnect Program - 5862 208
Bio-Solids Handling Rehabilitation - 8928 178
BNSF Quiet Zone - Mission Inn, 3RD, & Spruce - 8610 160
BNSF Third Street Grade Separation - 9901 163
BNSF/Third Street Railroad Crossing - 8914 162
BNSF/UP Quiet Zone - Panorama & Cridge - 5934 159
Bordwell Park - Floor Replacement - 2642 140
Cable Replacement - 470635 75
Cable Replacement – Public Works Street Rehab - 470636 76
Canyon Crest Widening - 5876 209
Capacitors-Regulators - 470612 62
Carlson Park Historic Falls Restoration - 8957 144
CDBG Street Improvements - Matching Funds - 8888 228
Central/Canyon Crest/Watkins Bike Lanes - 8935 234
Cheech Marin Center for Chicano Art - 9016 116
City Buildings Deferred Maintenance - 9019 119
Citywide Bike Share Program - 8823 219
Citywide Communications - 470664 81
Cochran Storm Drain Project - 8980 192
Collection System Upgrades - 7989 173
Controller Assembly Replacement - 5183 204
Curb and Gutter Repair Program - 8883 223
Customer Information System (CIS) Upgrade - 470694 85
Dark Fiber - 470698 87
Data Network Replacement - 9022 103
Dewatering Screw Presses - 8586 175
Distribution Automation/Reliability (Electric) - 470655 80
Distribution Automation/Reliability (Water) - 470655 253
Distribution Line Extensions - 470601 57
Distribution System Facilities Replacements - 470706 257
Downtown Bicycle & Pedestrian Improvements - 8891 231
Downtown Library - 9905 121
Downtown Parking Garage - 9037 120
El Dorado Park Walking Path - 2572 131
Enterprise Operation Data Mgmt System (Electric) - 470822 88
Enterprise Operation Data Mgmt System (Water) - 470822 267
Ethanol (E85) Fueling Station - 8598 112
Facility Rehabilitation Program - 470803 261
Facility Roof Repairs – 8962 115
Fairmount Park Signage - 2641 139
Fairview & Cornwall Storm Drain Project - 9020 194
Fleet Methane Detection System - 4085 111

Alphabetical Index

General Order 165 (GO 165) Upgrades/Line Rebuilds/Relocation Overhead – 470623 69
Geographic Information System (GIS) Upgrade - 470696 86
GO 165 Upgrades/Line Rebuilds/Relocate - Underground - 470624 70
Goeske Senior Center - Restroom Renovation - 2602 134
High Friction Surface and Hawk Signals - 8936 235
Hunter Park - Railroad Kiosk - 2600 132
Hydrant Check Valves - 470815 265
Indian Hill Road Slope Mitigation Project - 8990 238
Interconnected Traffic Signal Controller Replacement - 9024 242
Iowa Avenue Widening - 8998 239
Jurupa Avenue Extension - 5984 211
La Sierra Library Air Handler and Heating Units - 8961 114
La Sierra Park ADA Walkway - Phase I - 2609 138
La Sierra Park ADA Walkway - Phase II - 2646 142
Land Mobile Radio (Electric) - 470827 93
Land Mobile Radio (Water) - 470827 272
LED Signal Lenses Replacement Program - 8619 213
Line Rebuilds – 470603 58
Magnolia Avenue Widening from Buchanan Street to Hole Avenue- 8824 220
Main Replacements Program - 470707 258
Major 4-12 kV Conversion - 470644 79
Major Feeders - 470633 73
Major Overhead/Underground Conversions - 470619 67
Major Street Light Projects - 470637 77
Major Streets Rehabilitation - 8880 222
Major Tract Distribution - 470626 71
Major Transmission Line Projects - 470620 68
Market Street Bridge Replacement Over the Santa Ana River - 8699 215
Martha Mclean Anza Narrows - Frisbee Golf Course - 2601 133
Measure Z Pavement Rehabilitation and Pedestrian Facilities Improvement Program - 9026 243
Meters - 470613 63
Meters - 470702 255
Metro Museum Expansion and Rehabilitation - 9017 117
Minor Street Preservation Program (Slurry/ARAM) - 8894 232
Minor Street Rehabilitation Program - 8884 224
Misc Street Construction Program - 5070 203
Miscellaneous Signal Revisions Program - 5861 207
Miscellaneous Storm Drain Construction - 7001 191
Miscellaneous Traffic Projects - 8832 221
Mission Boulevard Bridge Replacement at Santa Ana River - 8629 214

Alphabetical Index

Mobile Applications - 470831 273
Monroe Rehab-Lincoln to Arlington - 8937 236
Monroe Storm Drain Project (Lines E2, E3, E5) - 8997 193
Mt. Rubidoux Trail Improvements - 8952 143
Myra Linn Park - Access Improvements - 2604 135
Myra Linn Park - Fitness Stations - 2608 137
Myra Linn Park - Shade Sails - 2606 136
Neighborhood Street Light Retrofit - 470638 78
Network Communication System (Electric) - 470826 92
Network Communication System (Water) - 470826 271
New Traffic Signals Program - 8341 212
Nichols Community Center Renovation - 2569 130
Norte Vista Sidewalk Improvements - 8889 229
Operational Technology Governance (Electric) - 470824 90
Operational Technology Governance (Water) - 470824 269
Outage Management System - 470829 94
Parks Master Plan Update - 9003 145
Pedestrian Ramps Program - 8887 227
Plant 2 Activated Sludge Rehab - Phase I - 9045 183
Plant 2 Blower No.2 Rehab/Replacement - 8977 182
Police Headquarters - 9018 118
Potable/Irrigation Well Replacement - 470833 275
Program - 9028 244
Pump Station Replacements - 470802 260
Recycled Water (Jackson St. Phase I – Facilities and Site Conversions) 470811 262
Riverside Transmission Reliability Project (RTRP) - 470685 83
RTA Bus Pad Construction - 9006 240
RTRP – 230kV Reimbursable - 470686 84
Runway 16/34 Rehabilitation - 2666 43
RWQCP Rehabilitation - Phase II - 8015 174
San Andreas Drainage Improvements - 8959 237
SB-1 Pavement Rehabilitation, Maintenance, and Safety Improvements Program - 9028 244
SCADA Upgrade & System Automation - 470832 274
Secondary System Upgrades - 7138 171
Security Improvements - 8960 113
Services - 470615 65
Seven Oaks Dam Conservation – Enhanced Recharge - 470813 263
Sidewalk Repair Program - 8886 226
Sidewalk/Trail Construction Program - 8885 225
Southern California Edison (SCE) Condemnation Costs - 470634 74

Alphabetical Index

Spread Spectrum Radio Replacement - 5846 205
Spruce B & C Sewer Construction - 8939 179
Street Lighting - 470607 59
Substation Bus & Upgrades - 470616 66
Substation Innovation - 470614 64
Substation Transformer Addition - 470632 72
Supervisory Control and Data Acquisition (SCADA) - 470672 82
System Expansion - 470701 254
System Substation Modifications - 470608 60
Tequesquite A, B, and C Sewer Construction - 8941 180
Tequesquite/Arroyo Trunk Line - 7709 172
Tertiary System Rehab - Phase I - 8613 177
Traffic Management Center - 5931 210
Traffic Signal Loop Replacement Program - 5847 206
Transformers - 470611 61
Transmission Mains - 470735 259
University Avenue Fiber Optic - 8711 216
UP Quiet Zone - Brockton and Palm - 8721 161
Upper Santa Ana River Habitat Conservation Plan - 470819 266
Van Buren Blvd Widening - 8926 233
Villegas Park - Wading Pool Design - 2643 141
Wastewater Lift Stations - 8943 181
Water Stock - 470705 256
Wells and Arlanza Sidewalk Project - 8890 230
Work, Asset, and Inventory Management System (Electric) - 470825 91
Work, Asset, and Inventory Mgmt System (Water) - 470825 270
WQCP Levee Upgrade - 8588 176

NOTES

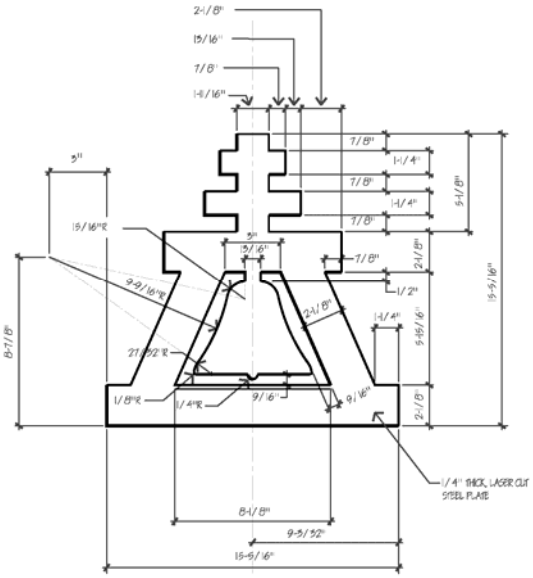
2-1/8"
15/16"
7/8"
1-11/16"
3"
15/16"R
9-9/16"R
27-9/32"R
1/8"R
1/4"R
9/16"
9/16"
7/8"
1-1/4"
7/8"
1-1/4"
7/8"
5-1/8"
7/8"
2-1/8"
1/2"
2-1/8"
1-1/4"
5-15/16"
2-1/8"
15-9/16"
8-7/8"
1/4" THICK, LASER CUT STEEL PLATE
8-1/8"
9-9/32"
15-9/16"

Project Number Index

PROJECT NUMBER

2560 Arlington Youth Innovation Center 129
2569 Nichols Community Center Renovation 130
2572 El Dorado Park Walking Path 131
2600 Hunter Park - Railroad Kiosk 132
2601 Martha Mclean Anza Narrows - Frisbee Golf Course 133
2602 Goeske Senior Center - Restroom Renovation 134
2604 Myra Linn Park - Access Improvements 135
2606 Myra Linn Park - Shade Sails 136
2608 Myra Linn Park - Fitness Stations 137
2609 La Sierra Park ADA Walkway - Phase I 138
2641 Fairmount Park Signage 139
2642 Bordwell Park - Floor Replacement 140
2643 Villegas Park - Wading Pool Design 141
2646 La Sierra Park ADA Walkway - Phase II 142
2666 Runway 16/34 Rehabilitation 43
2667 Airport - Taxiway A Rehabilitation 44
2668 Airport - Taxiway J Rehabilitation 45
4085 Fleet Methane Detection System 111
5070 Misc Street Construction Program 203
5183 Controller Assembly Replacement 204
5846 Spread Spectrum Radio Replacement 205
5847 Traffic Signal Loop Replacement Program 206
5861 Miscellaneous Signal Revisions Program 207
5862 Arterial Interconnect Program 208
5876 Canyon Crest Widening 209
5931 Traffic Management Center 210
5934 BNSF/UP Quiet Zone - Panorama & Cridge 159
5984 Jurupa Avenue Extension 211
7001 Miscellaneous Storm Drain Construction 191
7138 Secondary System Upgrades 171
7709 Tequesquite/Arroyo Trunk Line 172
7989 Collection System Upgrades 173
8015 RWQCP Rehabilitation - Phase II 174
8341 New Traffic Signals Program 212
8586 Dewatering Screw Presses 175
8588 WQCP Levee Upgrade 176
8598 Ethanol (E85) Fueling Station 112
8610 BNSF Quiet Zone - Mission Inn, 3RD, & Spruce 160
8613 Tertiary System Rehab - Phase I 177
8619 LED Signal Lenses Replacement Program 213
8629 Mission Boulevard Bridge Replacement at Santa Ana River 214

Project Number Index

8699 Market Street Bridge Replacement Over the Santa Ana River 215
8711 University Avenue Fiber Optic 216
8721 UP Quiet Zone - Brockton and Palm 161
8723 Arlington Avenue Improvements 217
8821 Adams Street/State Route 91 Interchange Improvements 218
8823 Citywide Bike Share Program 219
8824 Magnolia Avenue Widening from Buchanan Street to Hole Avenue 220
8832 Miscellaneous Traffic Projects 221
8880 Major Streets Rehabilitation 222
8883 Curb and Gutter Repair Program 223
8884 Minor Street Rehabilitation Program 224
8885 Sidewalk/Trail Construction Program 225
8886 Sidewalk Repair Program 226
8887 Pedestrian Ramps Program 227
8888 CDBG Street Improvements - Matching Funds 228
8889 Norte Vista Sidewalk Improvements 229
8890 Wells and Arlanza Sidewalk Project 230
8891 Downtown Bicycle & Pedestrian Improvements 231
8894 Minor Street Preservation Program (Slurry/ARAM) 232
8914 BNSF/Third Street Railroad Crossing 162
8926 Van Buren Blvd Widening 233
8928 Bio-Solids Handling Rehabilitation 178
8935 Central/Canyon Crest/Watkins Bike Lanes 234
8936 High Friction Surface and Hawk Signals 235
8937 Monroe Rehab-Lincoln to Arlington 236
8939 Spruce B & C Sewer Construction 179
8941 Tequesquite A, B, and C Sewer Construction 180
8943 Wastewater Lift Stations 181
8952 Mt. Rubidoux Trail Improvements 143
8957 Carlson Park Historic Falls Restoration 144
8959 San Andreas Drainage Improvements 237
8960 Security Improvements 113
8961 La Sierra Library Air Handler and Heating Units 114
8962 Facility Roof Repairs 115
8977 Plant 2 Blower No.2 Rehab/Replacement 182
8980 Cochran Storm Drain Project 192
8990 Indian Hill Road Slope Mitigation Project 238
8997 Monroe Storm Drain Project (Lines E2, E3, E5) 193
8998 Iowa Avenue Widening 239
9003 Parks Master Plan Update 145
9006 RTA Bus Pad Construction 240

Project Number Index

9016 Cheech Marin Center for Chicano Art 116
9017 Metro Museum Expansion and Rehabilitation 117
9018 Police Headquarters 118
9019 City Buildings Deferred Maintenance 119
9020 Fairview & Cornwall Storm Drain Project 194
9022 Data Network Replacement 103
9023 Active Transportation Master Plan 241
9024 Interconnected Traffic Signal Controller Replacement 242
9026 Measure Z Pavement Rehabilitation and Pedestrian Facilities Improvement Program 243
9028 SB-1 Pavement Rehabilitation, Maintenance, and Safety Improvements Program 244
9034 Airport Facilities Terminal Patio Deck 46
9037 Downtown Parking Garage 120
9038 Apron Asphalt Project Phase I 47
9039 Airport Camera System 48
9045 Plant 2 Activated Sludge Rehab - Phase I 183
9901 BNSF Third Street Grade Separation 163
9905 Downtown Library 121
470601 Distribution Line Extensions 57
470603 Line Rebuilds 58
470607 Street Lighting 59
470608 System Substation Modifications 60
470611 Transformers 61
470612 Capacitors-Regulators 62
470613 Meters 63
470614 Substation Innovation 64
470615 Services 65
470616 Substation Bus & Upgrades 66
470619 Major Overhead/Underground Conversions 67
470620 Major Transmission Line Projects 68
470623 General Order 165 (GO 165) Upgrades/Line Rebuilds/Relocation Overhead 69
470624 GO 165 Upgrades/Line Rebuilds/Relocate - Underground 70
470626 Major Tract Distribution 71
470632 Substation Transformer Addition 72
470633 Major Feeders 73
470634 Southern California Edison (SCE) Condemnation Costs 74
470635 Cable Replacement 75
470636 Cable Replacement – Public Works Street Rehab 76
470637 Major Street Light Projects 77
470638 Neighborhood Street Light Retrofit 78

Project Number Index

470644 Major 4-12 kV Conversion 79
470655 Distribution Automation/Reliability (Electric) 80
470655 Distribution Automation/Reliability (Water) 253
470664 Citywide Communications 81
470672 Supervisory Control and Data Acquisition (SCADA) 82
470685 Riverside Transmission Reliability Project (RTRP) 83
470686 RTRP – 230kV Reimbursable 84
470694 Customer Information System (CIS) Upgrade 85
470696 Geographic Information System (GIS) Upgrade 86
470698 Dark Fiber 87
470701 System Expansion 254
470702 Meters 255
470705 Water Stock 256
470706 Distribution System Facilities Replacements 257
470707 Main Replacements Program 258
470735 Transmission Mains 259
470802 Pump Station Replacements 260
470803 Facility Rehabilitation Program 261
470811 Recycled Water (Jackson St. Phase I – Facilities and Site Conversions) 262
470813 Seven Oaks Dam Conservation – Enhanced Recharge 263
470814 Aquifer Storage & Recovery System 264
470815 Hydrant Check Valves 265
470819 Upper Santa Ana River Habitat Conservation Plan 266
470822 Enterprise Operation Data Mgmt System (Electric) 88
470822 Enterprise Operation Data Mgmt System (Water) 267
470823 Advanced Metering Infrastructure (Electric) 89
470823 Advanced Metering Infrastructure (Water) 268
470824 Operational Technology Governance (Electric) 90
470824 Operational Technology Governance (Water) 269
470825 Work, Asset, and Inventory Management System (Electric) 91
470825 Work, Asset, and Inventory Mgmt System (Water) 270
470826 Network Communication System (Electric) 92
470826 Network Communication System (Water) 271
470827 Land Mobile Radio (Electric) 93
470827 Land Mobile Radio (Water) 272
470829 Outage Management System 94
470830 Advanced Distribution Management System 95
470831 Mobile Applications 273
470832 SCADA Upgrade & System Automation 274
470833 Potable/Irrigation Well Replacement 275