## GENERAL NOTES

1. IT SHALL BE THE RESPONSIBILITY OF THE CONTRACTOR TO CLEAR THE RIGHT OF WAY IN ACCORDANCE WITH THE PROVISIONS OF LAW AS IT AFFECTS EACH UTILITY INCLUDING IRRIGATION LINES AND APPURTENANCES AND AT NO COST TO THE CITY.
2. CONSTRUCTION SHALL BE IN ACCORDANCE WITH THE CITY OF RIVERSIDE DEPARTMENT OF PUBLIC WORKS STANDARD DRAWINGS, STANDARD DRAWING NO. 10, AND THE STANDARD SPECIFICATIONS FOR PUBLIC WORKS CONSTRUCTION, CURRENT EDITION.
3. TRIM EDGE OF EXISTING PAVEMENT WHERE NEW PAVEMENT JOINS TO A SMOOTH STRAIGHT LINE. CONSTRUCT MATCH-UP PAVING AS SHOWN ON PLAN AND OVERLAY PAVING AS DIRECTED IN THE FIELD TO PRODUCE A SMOOTH SECTION.
4. CURB AND GUTTER SHALL BE STAKED WITH 3' OFFSETS AT 12.5' INTERVALS AND TWO ROWS OF NUMBER 3 RE-BAR SHALL BE PLACED IN GUTTER WHERE GRADE IS LESS THAN 0.40%. PLACE 3/4" DOWELL PINS AT ALL EXPANSION JOINTS.
5. QUANTITIES SHOWN ARE FOR INFORMATION ONLY AND THE CITY OF RIVERSIDE IS NOT RESPONSIBLE FOR THEIR ACCURACY.
6. ANY TRAFFIC CONTROL STRIPING OBLITERATED AND/OR BADLY WORN DURING CONSTRUCTION SHALL BE RESTORED BY THE CONTRACTOR WITHIN FIVE DAYS AFTER NOTIFICATION FROM THE CITY INSPECTOR.
7. FINAL STRIPING FOR TRAFFIC CONTROL AND/OR PAVEMENT MARKING TO BE THE RESPONSIBILITY OF THE DEVELOPER.
8. ALL FLAGGED ELEVATIONS SHALL BE STAKED IN THE FIELD BY THE PRIVATE ENGINEER.
9. THE PRIVATE ENGINEER SIGNING THESE PLANS IS RESPONSIBLE FOR ASSURING THE ACCURACY AND ACCEPTABILITY OF THE WORK HEREON. IN THE EVENT OF DISCREPANCIES ARISING DURING CONSTRUCTION, THE PRIVATE ENGINEER SHALL BE RESPONSIBLE FOR DETERMINING AN ACCEPTABLE SOLUTION AND REVISING THE PLANS FOR APPROVAL BY THE CITY.
10. THE DEVELOPER SHALL BE RESPONSIBLE FOR PRESERVING OR RE-ESTABLISHING AND REFERENCING SURVEY MONUMENTS DESTROYED, DISTURBED OR BURIED AS A RESULT OF CONSTRUCTION SHOWN HEREON.
11. ALL TRAFFIC SIGNS SHALL BE INSTALLED PRIOR TO OPENING THE STREETS TO TRAFFIC.
12. DEVELOPER TO GIVE WATER DIVISION (5) WORKING DAYS WRITTEN NOTICE PRIOR TO START OF CONSTRUCTION AND TO ALLOW THE CITY TEN (10) WORKING DAYS FOR COMPLETION OF WORK. (351-6168)
13. ALL OVERHANGING TREE LIMBS THAT ARE LESS THAN 14' ABOVE THE STREET GRADE SHALL BE TRIMMED BACK.
14. THE CONTRACTOR SHALL CALL IN A LOCATION REQUEST TO UNDERGROUND SERVICE ALERT (USA), PHONE NO. 1-800-422-4133, TWO WORKING DAYS BEFORE DIGGING. NO CONSTRUCTION PERMIT WILL BE ISSUED BY THE PUBLIC WORKS DEPARTMENT INVOLVING EXCAVATION FOR UNDERGROUND FACILITIES UNLESS THE APPLICANT HAS BEEN PROVIDED AN INQUIRY IDENTIFICATION NUMBER BY USA.
15. *Proposed irrigation facilities shall not be installed until traffic signal facilities have been field located.*
16. *The constructed left turn lanes shall not be opened to public traffic until the traffic signals are operable.*

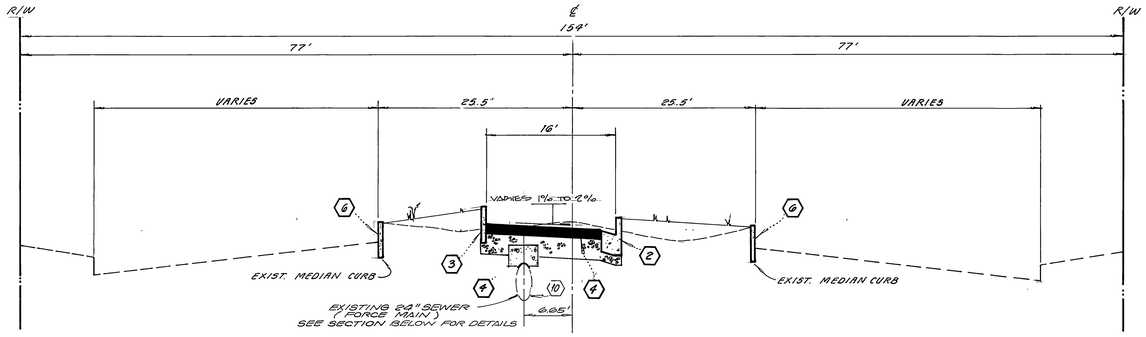


## TYPICAL SECTION

MAGNOLIA AVENUE
MEDIAN
NO SCALE T.I. = 8

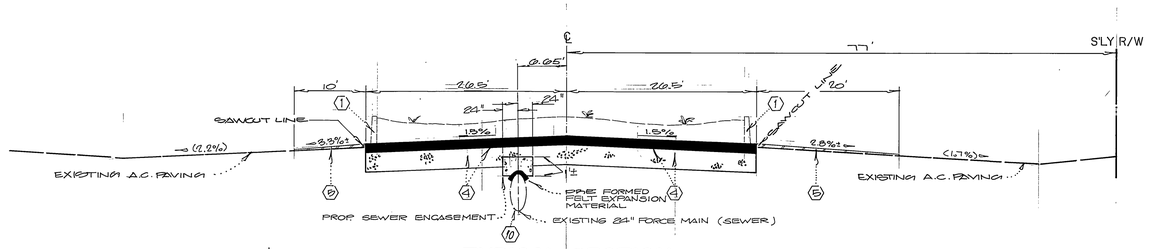


## TYPICAL SECTION

STA. 104+86.24
MIDDLE OF INTERSECTION
NO SCALE T.I.=8

## CONSTRUCTION NOTES

1. REMOVE EXISTING CONCRETE CURB.
2. CONSTRUCT CONCRETE CURB AND GUTTER PER RIVERSIDE CITY STD. NO. 200, (6" TYPE I).
3. CONSTRUCT CONCRETE CURB PER RIVERSIDE CITY STD. NO. 200, (6" TYPE II).
4. CONSTRUCT 5" OF A.C. PAVING OVER 13 1/2" AGGREGATE BASE OR 10 1/2" OF A.C. PAVING OVER COMPACTED NATIVE SOIL (S.R. 1203) R = 20 .
5. CONSTRUCT VARIABLE THICKNESS AC OVERLAY.
6. PROTECT IN PLACE.
7. REMOVE EXISTING MAGNOLIA GRANDIFLORA IN MEDIAN ISLAND.
8. EXISTING WASHINGTONIA ROBUSTA/MEXICAN FAN PALM TO BE RELOCATED WITHIN THE MEDIAN ISLAND AS TO THE SPECIFICATIONS OF THE CITY OF RIVERSIDE PARKS AND RECREATION DEPARTMENT.
9. 4" DIAMETER SCHEDUAL 40 PVC PIPE SLEEVES TO BE PROVIDED UNDER STREET RIGHT-OF-WAY TO CITY SPECIFICATIONS TO SERVE MEDIAN ISLAND IRRIGATION SYSTEMS.

## TRAFFIC SIGNAL AND STRIPING NOTE

FOR TRAFFIC SIGNAL FACILITIES AND PROPOSED STRIPING SEE PLAN X-342, PREPARED BY ARBINED, INC. 5225 CANYON CREST DRIVE BUILDING 200, SUITE 253, RIVERSIDE, CA. 92507 0323 (714) 351-8328.

10. *EXISTING 24" SEWER FORCE MAIN TO CAPPED WITH CONCRETE AS SHOWN IN TYPICAL SECTION FROM STA. 103+50.00 TO STA. 107+10.00*

## QUANTITY ESTIMATE

| | | |
|---|---|---|
| 1. | 6 IN. CURB AND GUTTER | 307 L.F. |
| 2. | 6 IN. CURB ONLY | 659 L.F. |
| 3. | 9 IN. AC / 13.5 IN. AB | 13,555 S.F. |
| 4. | A.C. OVERLAY | 6,404 S.F. |
| 5. | TREE REMOVALS | 10 EA. |
| 6. | TREE RELOCATION | 8 EA. |

## PARKS DEPARTMENT NOTES

1. All related work shall conform to the City of Riverside Park and Recreation Department Standards.
2. Contact the Street Tree Inspector a minimum of 48 hours in advance at 351-6126 to schedule inspection. Inspections shall be required:
   a) When Plant locations have been spotted in the field prior to digging plant pits.
   b) While digging plant pits and planting/relocating trees.
   c) After planting and all other indicated or specified work has been completed for start of maintenance.
   d) At the end of maintenance/final acceptance (contractor/developer will be released from maintenance only upon receipt of written notification from the city that the Park and Recreation Department is assuming maintenance responsibilities).
3. The Contractor/Developer shall maintain all plantings for a minimum period of **90 days.**
4. Street Tree planting shall be as follows:

| Street Name | Botanical Name/Common Name | Min. Size | Approx. Spacing | No. Rec. |
|---|---|---|---|---|

   a) Magnolia Ave-See Median Landscaping Plan # R-3023 L
   Prepared By: RANDOLPH HLUBIK ASSOCIATES, INC.
5. Park and Recreation Department and Public Works Department permits are required prior to commencement of tree relocation and/or removal work. For all trees within the ultimate pavement area, backfill of all holes is to be inspected by the City for proper compaction.
6. All Street Trees to be automatically irrigated.

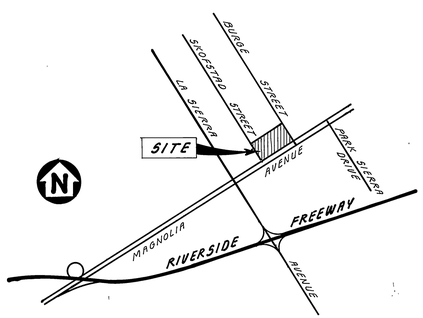


VICINITY MAP
NOT TO SCALE

| | | |
|---|---|---|
| CITY OF RIVERSIDE WATER SYSTEM — APPROVED BY: Richard L. Diebel — DATE 2-1-89 | SOUTHERN CALIFORNIA GAS CO. — APPROVED BY: E. P. Buckner — DATE 6-28-88 | J.N. BEELER AND ASSOCIATES, Land Surveying and Mapping, 6104 Riverside Ave. Suite B, Riverside, California 92506, (714) 682-2116 — APPROVED BY: James T. Dotson — DATE 4-29-88 — R.C.E. 18165 (EXP. 6/30/89) |
| CITY OF RIVERSIDE ELECTRIC - OVERHEAD AND UNDERGROUND — APPROVED BY: John Johnson — DATE 10/27/88 | PACIFIC TELEPHONE COMPANY — APPROVED BY: B. A. Wagoner — DATE 2-3-89 | |

| MARK | REVISIONS | APPR. | DATE |
|---|---|---|---|
| | | | |

DESIGNED BY SW DRAWN BY E.P. CHECKED BY

# CITY OF RIVERSIDE
## PUBLIC WORKS DEPARTMENT

| APPROVED BY | DATE | BY |
|---|---|---|
| PRINCIPAL ENGINEER | 2-15-89 | |
| PARK DEPARTMENT | 12/21/88 | |
| TRAFFIC DIVISION | 2-15-89 | |
| CHIEF P.W. ENGINEER | 3-23 | |
| | 3/16/89 | |

APPROVED BY Barry Beck
PUBLIC WORKS DIRECTOR
DATE 3/24/89

STREET PLAN AND PROFILE
**MAGNOLIA AVE.**
MEDIAN RECONSTRUCTION
**C-2-867**

HORIZ. SCALE: 1" = 20' VERT. SCALE: 1" = 4'

ACCOUNT NO.
R-3023
SHEET 1 OF 3
W.O. NO. 85-050-05

INDEXED 8-6-91

PG 2604

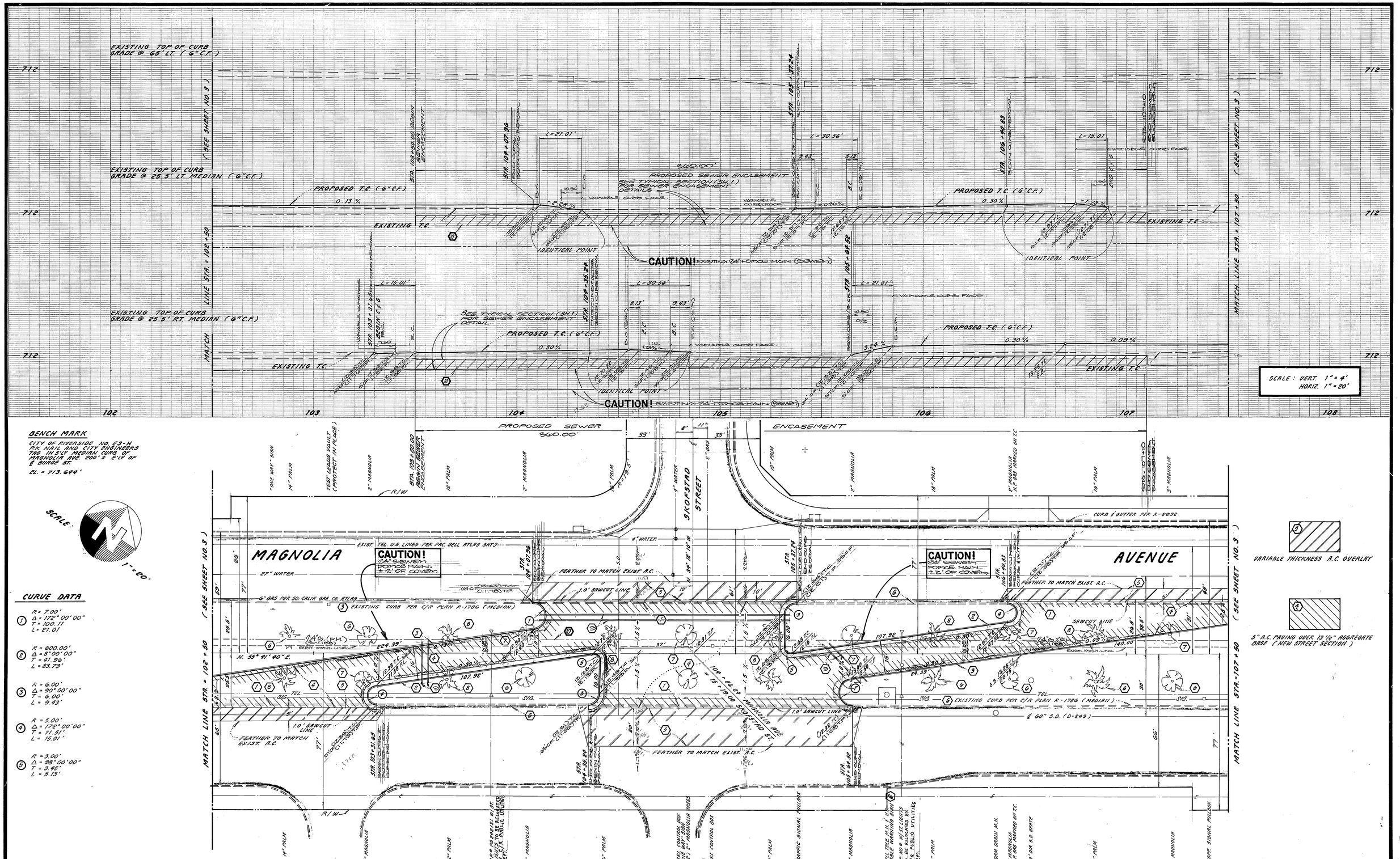


## BENCH MARK

CITY OF RIVERSIDE NO. E3-H
P.K. NAIL AND CITY ENGINEERS TAG IN S'LY MEDIAN CURB OF MAGNOLIA AVE. 200' ± E'LY OF ℄ BURGE ST.

EL. = 713.694'

SCALE: 1" = 20'

## CURVE DATA

(1) R = 7.00'
Δ = 172° 00' 00"
T = 100.11
L = 21.01

(2) R = 600.00'
Δ = 8° 00' 00"
T = 41.96'
L = 83.79'

(3) R = 6.00'
Δ = 90° 00' 00"
T = 6.00'
L = 9.43'

(4) R = 5.00'
Δ = 172° 00' 00"
T = 71.51'
L = 15.01'

(5) R = 3.00'
Δ = 98° 00' 00"
T = 3.95'
L = 5.13'

| | | | |
|---|---|---|---|
| CITY OF RIVERSIDE WATER SYSTEM<br>APPROVED BY: Richard L. Drobeck<br>DATE: 2-1-89 | SOUTHERN CALIFORNIA GAS CO.<br>APPROVED BY: C. F. Parker<br>DATE: 6-29-88 | J.N. BEELER AND ASSOCIATES<br>Land Surveying and Mapping<br>6104 Riverside Ave. Suite B<br>Riverside, California 92506<br>(714) 682-2216 | CITY OF RIVERSIDE<br>PUBLIC WORKS DEPARTMENT |
| CITY OF RIVERSIDE ELECTRIC - OVERHEAD AND UNDERGROUND<br>APPROVED BY: John Johnson<br>DATE: 10/27/88 | PACIFIC TELEPHONE COMPANY<br>APPROVED BY: B. L. Wagoner<br>DATE: 2-3-89 | APPROVED BY: James L. Dotson<br>DATE: 4-29-88<br>R.C.E. 18165, (EXP. 6/30/89) | |

| APPROVED BY | DATE | BY |
|---|---|---|
| PRINCIPAL ENGINEER | 2-15-89 | PWE |
| PARK DEPARTMENT | 12/22/88 | GA |
| TRAFFIC DIVISION | 2-15-89 | [illegible] |
| CHIEF P.W. ENGINEER | 3-23 | [illegible] |
| | 3/24/89 | WDS |

| MARK | REVISIONS | APPR. | DATE |
|---|---|---|---|
| | | | |

DESIGNED BY E.W. DRAWN BY E.B. CHECKED BY 10/28/88

APPROVED BY Gary Beck
PUBLIC WORKS DIRECTOR
DATE 3/24/89

STREET PLAN AND PROFILE
**MAGNOLIA AVE.**
MEDIAN RECONSTRUCTION
**C-2-867**

HORIZ. SCALE: 1" = 20' VERT. SCALE: 1" = 4'

ACCOUNT NO. R-3023
SHEET 2 OF 3
W.O. NO. 85-050-05

PC 2608

INDEXED 8-6-91 LH

OZALID-NO31

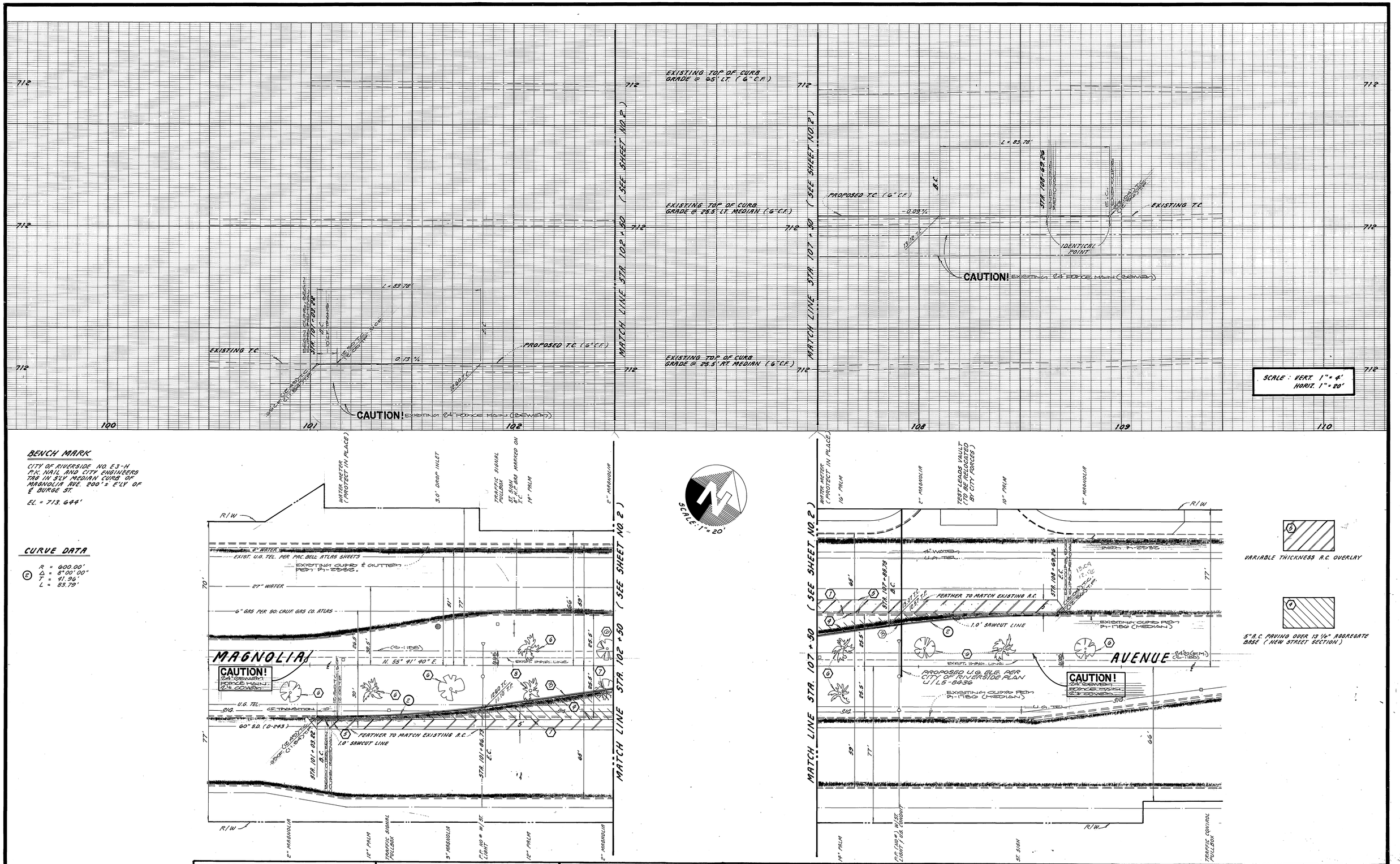


## BENCH MARK

CITY OF RIVERSIDE NO. E3-H
P.K. NAIL AND CITY ENGINEERS TAG IN S'LY MEDIAN CURB OF MAGNOLIA AVE. 200'± E'LY OF Ø BURGE ST.

EL. = 713.644'

## CURVE DATA

(2) R = 600.00'
Δ = 8°00'00"
T = 41.96'
L = 83.79'




| CITY OF RIVERSIDE WATER SYSTEM | SOUTHERN CALIFORNIA GAS CO. | J.N. BEELER AND ASSOCIATES Land Surveying and Mapping 6104 Riverside Ave. Suite B Riverside, California 92506 (714) 682-2216 |
|---|---|---|
| APPROVED BY: Richard L. Diedrich 2-1-89 DATE | APPROVED BY: C.P. Parker 6-29-88 DATE | APPROVED BY: James L. Robson 4-29-88 DATE R.C.E. 18165 (EXP. 6/30/89) |
| CITY OF RIVERSIDE ELECTRIC - OVERHEAD AND UNDERGROUND | PACIFIC TELEPHONE COMPANY | |
| APPROVED BY: John Johnson 10/28/88 DATE | APPROVED BY: B. L. Wagoner 2-3-89 DATE | |

| MARK | REVISIONS | APPR. | DATE |
|---|---|---|---|
| | | | |

DESIGNED BY E.W. DRAWN BY E.E. CHECKED BY

# CITY OF RIVERSIDE
## PUBLIC WORKS DEPARTMENT

| APPROVED BY | DATE | BY |
|---|---|---|
| PRINCIPAL ENGINEER | 2-15-89 | |
| PARK DEPARTMENT | 12/22/88 | |
| TRAFFIC DIVISION | 2-15-89 | |
| CHIEF P.W. ENGINEER | 3-23 | |
| | 3/16/89 | |

APPROVED BY: PUBLIC WORKS DIRECTOR
DATE 3/24/89

STREET PLAN AND PROFILE
MAGNOLIA AVE.
MEDIAN RECONSTRUCTION
C-2-867

HORIZ. SCALE: 1" = 20' VERT. SCALE: 1" = 4'

ACCOUNT NO.
R-3023
SHEET 3 OF 3
W.O. NO. 85-090-05

INDEXED 8-6-91 4H

PC 2604