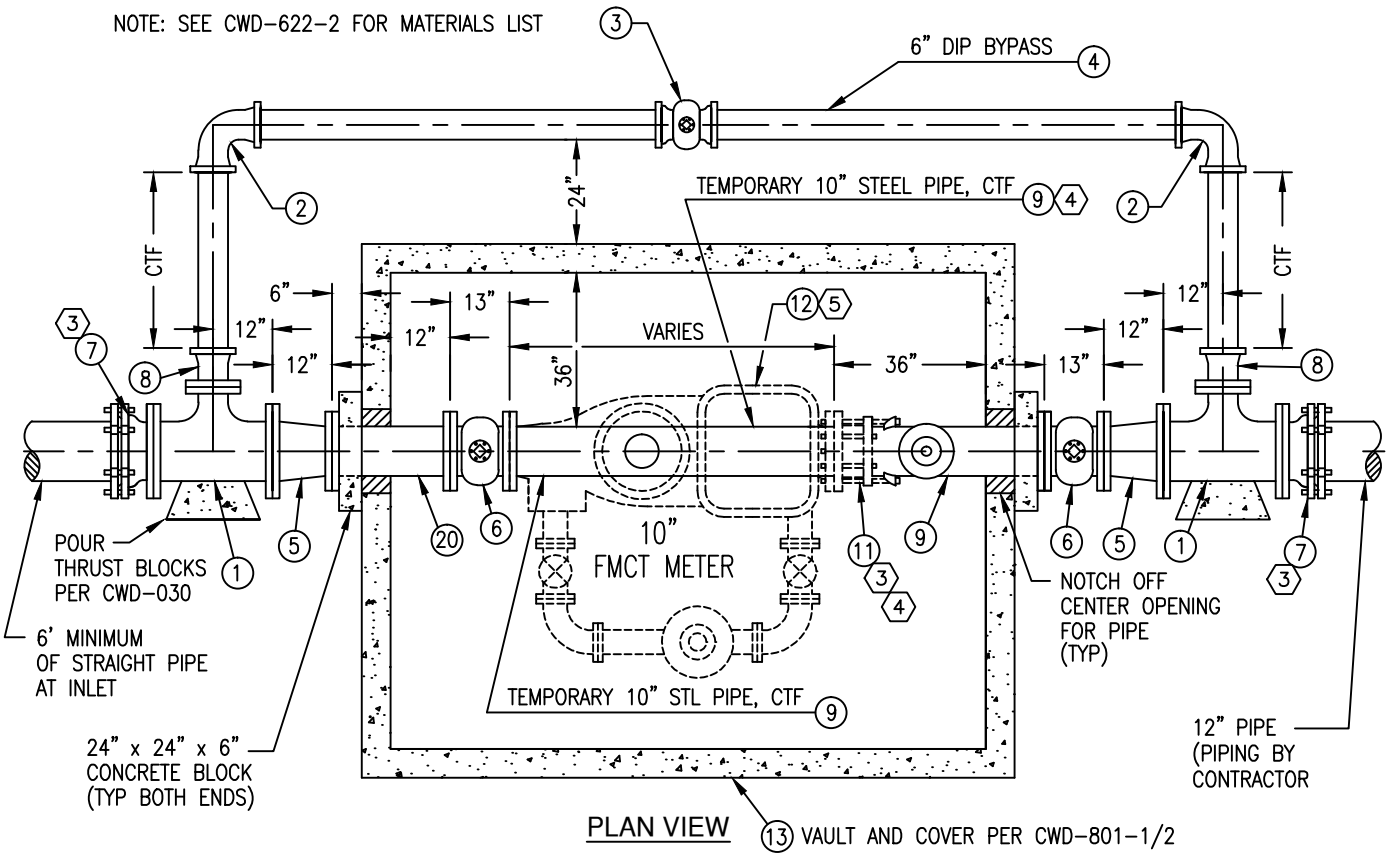

PLAN VIEW

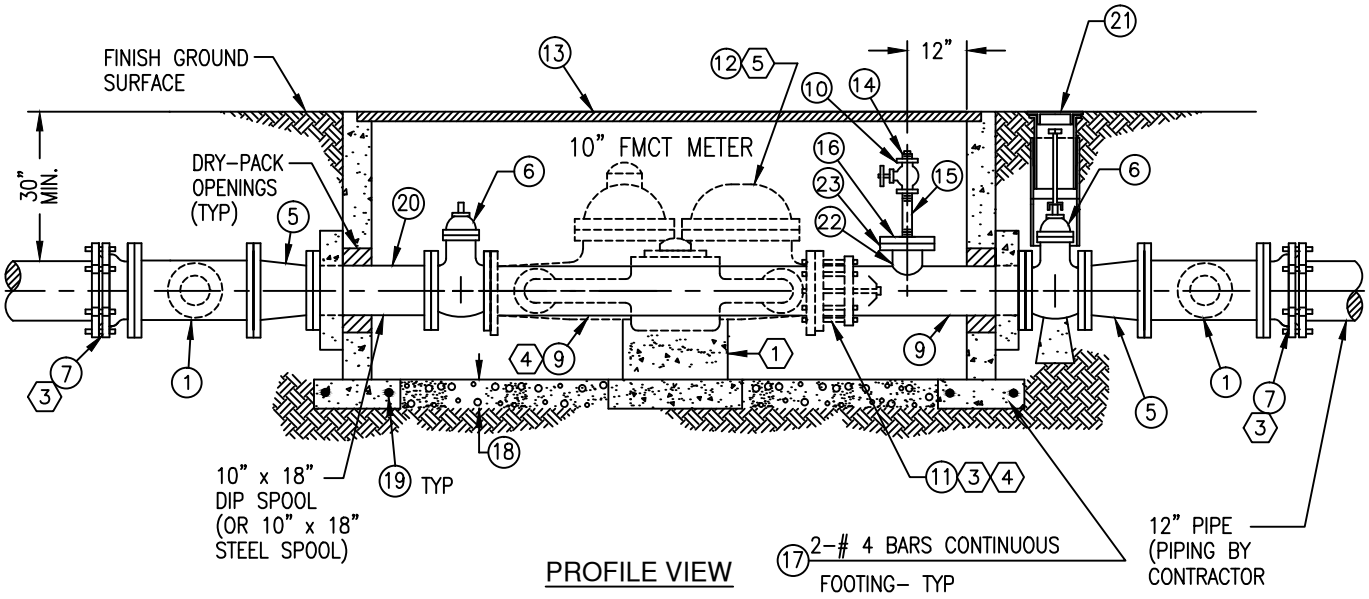

PROFILE VIEW

GENERAL NOTES:

1. SUPPORT METER ON CONCRETE PAD AND CONCRETE BLOCK.
2. ADJUST VAULT AND COVER TO MEET SIDEWALK AND CURB GRADE. PAINT PER CONSTRUCTION SPECIFICATION, SECTION 310.
3. RESTRAIN ALL MECHANICAL JOINTS PER CONSTRUCTION SPECIFICATIONS.
4. CONTRACTOR SHALL INSTALL ALL PIPE, FITTINGS, AND MATERIALS BETWEEN THE TAPPING GATE AND "PIPING BY CONTRACTOR", INCLUDING TEMPORARY FLANGE COUPLING CONNECTION AT INFLUENT VALVE.
5. CITY FORCES WILL FURNISH AND INSTALL 10" COMPOUND METER AND FAB. METER READING LID.

WATER DISTRIBUTION & TRANSMISSION PIPELINE CONSTRUCTION METHODS	10" DOMESTIC WATER SERVICE	
CITY OF RIVERSIDE PUBLIC UTILITIES STANDARD DRAWING	APPROV. 1/8/2013 DATE	CWD-622-1